AUTHENTICATED
U.S. GOVERNMENT
INFORMATION
GPO

Title 28—Judicial Administration

(Parts 0 to 42)

Part

CHAPTER I—Department of Justice 3

CHAPTER I—DEPARTMENT OF JUSTICE

Part		Page
0	Organization of the Department of Justice	5
1	Executive clemency	100
2	Parole, release, supervision and recommitment of prisoners, youth offenders, and juvenile delinquents	103
3	Gambling devices	208
4	Procedure governing applications for certificates of exemption under the Labor-Management Reporting and Disclosure Act of 1959, and the Employee Retirement Income Security Act of 1974	209
5	Administration and enforcement of Foreign Agents Registration Act of 1938, as amended	213
6	Traffic in contraband articles in Federal penal and correctional institutions	224
7	Rewards for capture of escaped Federal prisoners	224
8	FBI forfeiture authority for certain statutes	225
9	Regulations governing the remission or mitigation of civil and criminal forfeitures	228
10	Registration of certain organizations carrying on activities within the United States	240
11	Debt collection	242
12	Registration of certain persons having knowledge of foreign espionage, counterespionage, or sabotage matters under the Act of August 1, 1956	254
13	Atomic weapons and special nuclear materials rewards regulations	257
14	Administrative claims under Federal Tort Claims Act	258
15	Certification and decertification in connection with certain suits based upon acts or omissions of Federal employees and other persons	265
16	Production or disclosure of material or information	266
17	Classified National Security Information and access to classified information	387
18	Office of Justice Programs hearing and appeal procedures	403

Part		Page
19	Use of penalty mail in the location and recovery of missing children	407
20	Criminal justice information systems	411
21	Witness fees	424
22	Confidentiality of identifiable research and statistical information	428
23	Criminal intelligence systems operating policies	432
24	Implementation of the Equal Access to Justice Act in Department of Justice administrative proceedings	436
25	Department of Justice information systems	441
26	Implementation of death sentences in Federal cases	450
27	Whistleblower protection for Federal Bureau of Investigation employees	452
28	DNA identification system	455
29	Motor Vehicle Theft Prevention Act regulations	461
30	Intergovernmental review of Department of Justice programs and activities	464
31	OJJDP grant programs	468
32	Public safety officers' death, disability, and educational assistance benefit claims	488
33	Bureau of Justice Assistance grant programs	512
34	OJJDP competition and peer review procedures	529
35	Nondiscrimination on the basis of disability in state and local government services	534
36	Nondiscrimination on the basis of disability by public accommodations and in commercial facilities	574
37	Procedures for coordinating the investigation of complaints or charges of employment discrimination based on disability subject to the Americans with Disabilities Act and section 504 of the Rehabilitation Act of 1973	749
38	Equal treatment for faith-based organizations	755
39	Enforcement of nondiscrimination on the basis of handicap in programs or activities conducted by the Department of Justice	759
40	Standards for inmate grievance procedures	782
41	Implementation of Executive Order 12250, nondiscrimination on the basis of handicap in federally assisted programs	787
42	Nondiscrimination; equal employment opportunity; policies and procedures	794

SUPPLEMENTARY PUBLICATIONS: *The official opinions of the Attorneys General of the United States. (Op. A. G.) Irregular, 1789—; Washington, v. 1—, 1852—.*

PART 0—ORGANIZATION OF THE DEPARTMENT OF JUSTICE

Subpart A—Organizational Structure of the Department of Justice

Sec.
0.1 Organizational units.

Subpart B—Office of the Attorney General

0.5 Attorney General.
0.10 Attorney General's Advisory Committee of U.S. Attorneys.
0.11 Incentive Awards Board.
0.12 Young American Medals Committee.
0.13 Legal proceedings.

Subpart C—Office of the Deputy Attorney General

0.15 Deputy Attorney General.
0.17 Office of Investigative Agency Policies.
0.18a Office of Small and Disadvantaged Business Utilization.

Subpart C–1—Office of the Associate Attorney General

0.19 Associate Attorney General.

Subpart D—Office of the Solicitor General

0.20 General functions.
0.21 Authorizing intervention by the Government in certain cases.

Subpart D–1—Executive Office for U.S. Attorneys

0.22 General functions.

Subpart D–2—Office of Legal Policy

0.23 General functions.
0.23a Office of Information and Privacy.
0.23b Office of Asylum Policy and Review.

Subpart E—Office of Legal Counsel

0.25 General functions.

Subpart E–1—Office of International Programs

0.26 Organization.

Subpart E–2—Office of Legislative and Intergovernmental Affairs

0.27 General functions.

Subpart E–3—Office of Public Affairs

0.28 General functions.

Subpart E–4—Office of the Inspector General

0.29 Organization.
0.29a General functions.
0.29b Reporting allegations of waste, fraud, or abuse.
0.29c Reporting allegations of employee misconduct.
0.29d Whistleblower protection for FBI employees.
0.29e Relationship to other departmental units.
0.29f Confidentiality.
0.29g Reprisals.
0.29h Specific authorities of the Inspector General.
0.29i Audit, inspection, and review authority.
0.29j Law enforcement authority.

Subpart F—Community Relations Service

0.30 General functions.
0.31 Designating officials to perform the functions of the Director.
0.32 Applicability of existing departmental regulations.

Subpart F–1 [Reserved]

Subpart F–2—INTERPOL-United States National Central Bureau

0.34 General functions.

Subpart G—Office of the Pardon Attorney

0.35 General functions; delegation of authority.
0.36 Recommendations.

Subpart G–1—Executive Office for United States Trustees

0.37 Organization.
0.38 Functions.

Subpart G–2—Office of Professional Responsibility

0.39 Office of Professional Responsibility.
0.39a Functions.
0.39b Confidentiality of information.
0.39c Relationship to other departmental units.

Subpart H—Antitrust Division

0.40 General functions.
0.41 Special functions.
APPENDIX TO SUBPART H—DELEGATION OF AUTHORITY RESPECTING DENIALS OF FREEDOM OF INFORMATION AND PRIVACY ACT REQUESTS

Subpart I—Civil Division

0.45 General functions.
0.46 Certain civil litigation and foreign criminal proceedings.
0.47 Alien property matters.
0.48 International trade litigation.
0.49 International judicial assistance.

Subpart J—Civil Rights Division

0.50 General functions.
0.51 Leadership and coordination of nondiscrimination laws.
0.52 Certifications under 18 U.S.C. 3503.
0.53 Office of Special Counsel for Immigration Related Unfair Employment Practices.
APPENDIX TO SUBPART J

Subpart K—Criminal Division

0.55 General functions.
0.56 Exclusive or concurrent jurisdiction.
0.57 Criminal prosecutions against juveniles.
0.58 Delegation respecting payment of benefits for disability or death of law enforcement officers not employed by the United States.
0.59 Certain certifications under 18 U.S.C. 3331 and 3503.
0.61–0.62 [Reserved]
0.63 Delegation respecting admission and naturalization of certain aliens.
0.64 [Reserved]
0.64–1 Central or Competent Authority under treaties and executive agreements on mutual assistance in criminal matters.
0.64–2 Delegation respecting transfer of offenders to or from foreign countries.
0.64–3 Delegation respecting designation of certain Department of Agriculture employees (Tick Inspectors) to carry and use firearms.
0.64–4 Delegation respecting temporary transfers, in custody, of certain prisoner-witnesses from a foreign country to the United States to testify in Federal or State criminal proceedings.
0.64–5 Policy with regard to bringing charges under the Economic Espionage Act of 1996, Pub. L. 104–294, effective October 11, 1996.
APPENDIX TO SUBPART K

Subpart L—Environment and Natural Resources Division

0.65 General functions.
0.65a Litigation involving Environmental Protection Agency.
0.66 Delegation respecting title opinions.
0.67 Delegation respecting conveyances for public-airport purposes.
0.68 Delegation respecting mineral leasing.
0.69 Delegation of authority to make determinations and grants.
0.69a Delegation respecting approval of conveyances.
0.69b Delegation of authority respecting conveyances for public airports.
0.69c Litigation involving the Resource Conservation and Recovery Act.

Subpart M—Tax Division

0.70 General functions.
0.71 Delegation respecting immunity matters.

Subpart N—National Security Division

0.72 National Security Division.

Subpart O—Justice Management Division

0.75 Policy functions.
0.76 Specific functions.
0.77 Operational functions.
0.78 Implementation of financial disclosure requirements.
0.79 Redelegation of authority.

Subpart P—Federal Bureau of Investigation

0.85 General functions.
0.85a Criminal justice policy coordination.
0.86 Seizure of gambling devices.
0.87 Representation on committee for visit-exchange.
0.88 Certificates for expenses of unforeseen emergencies.
0.89 Authority to seize arms and munitions of war.
0.89a Delegations respecting claims against the FBI.

Subpart P–1—Office of Justice Programs and Related Agencies

0.90 Office of Justice Programs.
0.91 Office for Victims of Crime.
0.92 National Institute of Justice.
0.93 Bureau of Justice Statistics.
0.94 Office of Juvenile Justice and Delinquency Prevention.
0.94–1 Bureau of Justice Assistance.

Subpart Q—Bureau of Prisons

0.95 General functions.
0.96 Delegations.
0.96a Interstate Agreement on Detainers.
0.96b Exchange of prisoners.
0.96c Cost of incarceration.
0.97 Redelegation of authority.
0.98 Functions of Commissioner of Federal Prison Industries.
0.99 Compensation to Federal prisoners.
APPENDIX TO SUBPART Q—CONFINEMENT OF PERSONS IN DISTRICT OF COLUMBIA CORRECTIONAL INSTITUTIONS

Subpart R—Drug Enforcement Administration

0.100 General functions.
0.101 Specific functions.
0.102 Drug enforcement policy coordination.
0.103 Release of information.
0.103a Delegations respecting claims against the Drug Enforcement Administration.
0.104 Redelegation of authority.
APPENDIX TO SUBPART R—REDELEGATION OF FUNCTIONS

Subpart S—Immigration and Naturalization Service

0.105 General functions.
0.106 Certificates for expenses of unforeseen emergencies.
0.107 Representation on committee for visit-exchange.
0.108 Redelegation of authority.
0.109 Implementation of the Treaty of Friendship and General Relations Between the United States and Spain.
0.110 Implementation of the Convention Between the United States and Greece.

Subpart T—United States Marshals Service

0.111 General functions.
0.111a Temporary prisoner-witness transfers.
0.111B Witness Security Program.
0.112 Special deputation.
0.113 Redelegation of authority.
0.114 Fees for services.

Subpart U—Executive Office for Immigration Review.

0.115 General functions.
0.116 Board of Immigration Appeals.
0.117 Office of Chief Immigration Judge.
0.118 Office of Chief Administrative Hearing Officer.

Subpart U–1—Office of Community Oriented Policing Services

0.119 Organization.
0.120 General functions.
0.121 Applicability of existing departmental regulations.

Subpart U–2—Office on Violence Against Women.

0.122 Office on Violence Against Women.

Subpart U–3—Office of the Federal Detention Trustee

0.123 Federal Detention Trustee.

Subpart V—United States Parole Commission

0.124 United States Parole Commission.
0.125 Chairman of U.S. Parole Commission.
0.126 Administrative support.
0.127 Indigent prisoners.

Subpart V–1—Foreign Claims Settlement Commission

0.128 Organization.
0.128a General functions.
0.128b Regulations.

Subpart V–2—Professional Responsibility Advisory Office

0.129 Professional Responsibility Advisory Office.

Subpart W—Bureau of Alcohol, Tobacco, Firearms, and Explosives

0.130 General functions.
0.131 Specific functions.
0.132 Delegation respecting claims against the Bureau of Alcohol, Tobacco, Firearms, and Explosives.
0.133 Transition and continuity of regulations.

Subpart W–1—Additional Assignments of Functions and Designation of Officials To Perform the Duties of Certain Offices in Case of Vacancy, or Absence Therein or in Case of Inability or Disqualification to Act

0.135 Functions common to heads of organizational units.
0.136 Designation of Acting United States Attorneys.
0.137 Designating officials to perform the functions and duties of certain offices in case of absence, disability or vacancy.

Subpart X—Authorizations With Respect to Personnel and Certain Administrative Matters

0.138 Federal Bureau of Investigation, Drug Enforcement Administration, Bureau of Alcohol, Tobacco, Firearms, and Explosives, Bureau of Prisons, Federal Prison Industries, Immigration and Naturalization Service, United States Marshals Service, Office of Justice Programs, Executive Office for Immigration Review, Executive Office for United States Attorneys, Executive Office for United States Trustees.
0.139 [Reserved]
0.140 Authority relating to advertisements, and purchase of certain supplies and services.
0.141 Audit and ledger accounts.

0.142 Per diem and travel allowances.
0.143 Incentive Awards Plan.
0.144 Determination of basic workweek.
0.145 Overtime pay.
0.146 Seals.
0.147 Certification of obligations.
0.148 Certifying officers.
0.149 Cash payments.
0.150 Collection of erroneous payments.
0.151 Administering oath of office.
0.152 Approval of funds for attendance at meetings.
0.153 Selection and assignment of employees for training.
0.154 Advance and evacuation payments and special allowances.
0.155 Waiver of claims for erroneous payments of pay and allowances.
0.156 Execution of U.S. Marshals' deeds or transfers of title.
0.157 Federal Bureau of Investigation—Drug Enforcement Administration Senior Executive Service.
0.158 [Reserved]
0.159 Redelegation of authority.

Subpart Y—Authority to Compromise and Close Civil Claims and Responsibility for Judgments, Fines, Penalties, and Forfeitures

0.160 Offers that may be accepted by Assistant Attorneys General.
0.161 Acceptance of certain offers by the Deputy Attorney General or Associate Attorney General, as appropriate.
0.162 Offers which may be rejected by Assistant Attorneys General.
0.163 Approval by Solicitor General of action on compromise offers in certain cases.
0.164 Civil claims that may be closed by Assistant Attorneys General.
0.165 Recommendations to the Deputy Attorney General or Associate Attorney General, as appropriate, that certain claims be closed.
0.166 Memorandum pertaining to closed claim.
0.167 Submission to Associate Attorney General by Director of Office of Alien Property of certain proposed allowances and disallowances.
0.168 Redelegation by Assistant Attorneys General.
0.169 Definition of ''gross amount of the original claim''.
0.170 Interest on monetary limits.
0.171 Judgments, fines, penalties, and forfeitures.
0.172 Authority: Federal tort claims.

APPENDIX TO SUBPART Y—REDELEGATIONS OF AUTHORITY TO COMPROMISE AND CLOSE CIVIL CLAIMS

Subpart Z—Assigning Responsibility Concerning Applications for Orders Compelling Testimony or Production of Evidence by Witnesses

0.175 Judicial and administrative proceedings.
0.176 Congressional proceedings.
0.177 Applications for orders under the Comprehensive Drug Abuse Prevention and Control Act.
0.177a Antitrust civil investigative demands.
0.178 Redelegation of authority.

Subpart Z–1—Prosecutions for Obstruction of Justice and Related Charges

0.179 Scope.
0.179a Enforcement responsibilities.

Subpart AA—Orders of the Attorney General

0.180 Documents designated as orders.
0.181 Requirements for orders.
0.182 Submission of proposed orders to the Office of Legal Counsel.
0.183 Distribution of orders.

Subpart BB—Sections and Subunits

0.190 Changes within organizational units.
0.191 Changes which affect the overall structure of the Department.

Subpart CC—Jurisdictional Disagreements

0.195 Procedure with respect to jurisdictional disagreements.
0.196 Procedures for resolving disagreements concerning mail or case assignments.
0.197 Agreements, in connection with criminal proceedings or investigations, promising non-deportation or other immigration benefits.

AUTHORITY: 5 U.S.C. 301; 28 U.S.C. 509, 510, 515–519.

SOURCE: Order No. 423–69, 34 FR 20388, Dec. 31, 1969, unless otherwise noted.

Subpart A—Organizational Structure of the Department of Justice

§ 0.1 Organizational units.

The Department of Justice shall consist of the following principal organizational units:

Offices

Office of the Attorney General.
Office of the Deputy Attorney General.
Office of the Associate Attorney General.
Office of the Solicitor General.
Office of Legal Counsel.
Office of Legislative Affairs.
Office of Professional Responsibility.
Office of Legal Policy.
Office of Public Affairs.
Office of the Pardon Attorney.
Office of Special Counsel for Immigration Related Unfair Employment Practices.
Community Relations Service.
Executive Office for Immigration Review.
Executive Office for United States Attorneys.
Executive Office for United States Trustees.
INTERPOL—United States National Central Bureau.
Office of International Programs.
Office of Community Oriented Policing Services.
Office on Violence Against Women.
Office of the Federal Detention Trustee.
Professional Responsibility Advisory Office.

Divisions

Antitrust Division.
Civil Division.
Civil Rights Division.
Criminal Division.
Environment and Natural Resources Division.
National Security Division.
Tax Division.
Justice Management Division.

Bureaus

Federal Bureau of Investigation.
Bureau of Prisons.
Drug Enforcement Administration.
Office of Justice Programs (and related agencies).
United States Marshals Service.
Bureau of Alcohol, Tobacco, Firearms, and Explosives.

Boards

Board of Immigration Appeals.
U.S. Parole Commission.
Foreign Claims Settlement Commission.

[Order No. 900–80, 45 FR 43702, June 30, 1980, as amended by Order No. 960–81, 46 FR 52340, Oct. 27, 1981; Order No. 1299–88, 53 FR 35811, Sept. 15, 1988; Order No. 1497–91, 56 FR 25629, June 5, 1991; Order No. 1606–92, 57 FR 32438, July 22, 1992; Order No. 1948–95, 60 FR 8933, Feb. 16, 1995; Order No. 2650–2003, 68 FR 4926, Jan. 31, 2003; Order No. 2811–2006, 71 FR 19827, Apr. 18, 2006; Order No. 2825–2006, 71 FR 36193, June 26, 2006; Order No. 2865–2007, 72 FR 10065, Mar. 7, 2007]

Subpart B—Office of the Attorney General

§0.5 Attorney General.

The Attorney General shall:

(a) Supervise and direct the administration and operation of the Department of Justice, including the offices of U.S. Attorneys and U.S. Marshals, which are within the Department of Justice.

(b) Represent the United States in legal matters generally.

(c) Furnish advice and opinions, formal and informal, on legal matters to the President and the Cabinet and to the heads of the executive departments and agencies of the Government, as provided by law.

(d) Appear in person to represent the Government in the Supreme Court of the United States, or in any other court, in which he may deem it appropriate.

(e) Designate, pursuant to Executive Orders 9788 of October 4, 1946, and 10254 of June 15, 1951, officers and agencies of the Department of Justice to act as disbursing officers for the Office of Alien Property.

(f) Perform or supervise the performance of other duties required by statute or Executive order.

§0.10 Attorney General's Advisory Committee of U.S. Attorneys.

(a) The Attorney General's Advisory Committee of U.S. Attorneys shall consist of fifteen U.S. Attorneys, designated by the Attorney General. The membership shall be selected to represent the various geographic areas of the Nation and both large and small offices. Members shall serve at the pleasure of the Attorney General, but such service normally shall not exceed three years and shall be subject to adjustment by the Attorney General so as to assure the annual rotation of approximately one-third of the Committee's membership.

(b) The Committee shall make recommendations to the Attorney General, to the Deputy Attorney General and to the Associate Attorney General concerning any matters which the Committee believes to be in the best interests of justice, including, but not limited to, the following:

(1) Establishing and modifying policies and procedures of the Department;

(2) Improving management, particularly with respect to the relationships between the Department and the U.S. Attorneys;

(3) Cooperating with State Attorneys General and other State and local officials for the purpose of improving the quality of justice in the United States;

(4) Promoting greater consistency in the application of legal standards throughout the Nation and at the various levels of government; and

(5) Aiding the Attorney General, the Deputy Attorney General and the Associate Attorney General in formulating new programs for improvement of the criminal justice system at all levels, including proposals relating to legislation and court rules.

(c) The Committee shall select from its membership a chairman, a vice-chairman and a secretary, and shall establish such subcommittees as it deems necessary to carry out its objectives. United States Attorneys who are not members of the Committee may be included in the membership of subcommittees.

(d) The Executive Office for U.S. Attorneys shall provide the Committee with such staff assistance and funds as are reasonably necessary to carry out the Committee's responsibilities.

[Order No. 640–76, 41 FR 7748, Feb. 20, 1976, as amended by Order No. 960–81, 46 FR 52340, Oct. 27, 1981]

§ 0.11 Incentive Awards Board.

The Incentive Awards Board shall consist of the Deputy Attorney General or a designee of the Deputy Attorney General, who shall be the chairperson, and four members designated by the Attorney General from among the Assistant Attorneys General, bureau heads or persons of equivalent rank in the Department. The duties of the Board shall be:

(a) Consider and make recommendations to the Attorney General concerning honorary awards and cash awards in excess of $5,000 to be granted for suggestions, inventions, superior accomplishment, or other personal effort which contributes to the efficiency, economy, or other improvement of Government operations or achieves a significant reduction in paperwork.

(b) Consider and make recommendations to the Attorney General for transmittal to the Office of Personnel Management and the President for Presidential awards under 5 U.S.C. 4504 and 5403.

(c) Evaluate periodically the effectiveness of the employee recognition program and recommend needed improvements to the Attorney General.

[Order No. 960–81, 46 FR 52340, Oct. 27, 1981]

§ 0.12 Young American Medals Committee.

There shall be in the Office of the Attorney General a Young American Medals Committee, which shall be composed of four members, one of whom shall be the Director of Public Affairs who shall be the Executive Secretary of the Committee. The Chairman of the Committee shall be designated by the Attorney General. The Committee shall issue regulations relating to the establishment of the Young American Medal for Bravery and Young American Medal for Service provided for by the act of August 3, 1950, 64 Stat. 397, and governing the requirements and procedures for the award of such medals. The regulations of the Committee in effect on the effective date of this part shall continue in effect until amended, modified, or revoked by the Committee.

[Order No. 423–69, 34 FR 20388, Dec. 31, 1969, as amended by Order No. 445–70, 35 FR 19397, Dec. 23, 1970. Redesignated by Order No. 543–73, 38 FR 29583, Oct. 26, 1973, as amended by Order No. 960–81, 46 FR 52340, Oct. 27, 1981]

§ 0.13 Legal proceedings.

(a) Each Assistant Attorney General and Deputy Assistant Attorney General is authorized to exercise the authority of the Attorney General under 28 U.S.C. 515(a), in cases assigned to, conducted, handled, or supervised by such official, to designate Department attorneys to conduct any legal proceeding, civil or criminal, including grand jury proceedings and proceedings before committing magistrates, which United States attorneys are authorized by law to conduct, whether or not the designated attorney is a resident of the

district in which the proceedings is brought.

(b) Each Assistant Attorney General is authorized to redelegate to Section Chiefs the authority delegated by paragraph (a) of this section, except that such redelegation shall not apply to the designation of attorneys to conduct grand jury proceedings.

[Order No. 725–77, 42 FR 26205, May 23, 1977]

Subpart C—Office of the Deputy Attorney General

§0.15 Deputy Attorney General.

(a) The Deputy Attorney General is authorized to exercise all the power and authority of the Attorney General, unless any such power or authority is required by law to be exercised by the Attorney General personally.

(b) The Deputy Attorney General shall advise and assist the Attorney General in formulating and implementing Department policies and programs and in providing overall supervision and direction to all organizational units of the Department. Subject to the general supervision of the Attorney General, the Deputy Attorney General shall direct the activities of organizational units as assigned. In addition, the Deputy Attorney General shall:

(1) Except as assigned to the Associate Attorney General by §0.19(a)(1), exercise the power and authority vested in the Attorney General to take final action in matters pertaining to:

(i) The appointment, employment, pay, separation, and general administration of personnel, including attorneys, in the Senior Executive Service or the equivalent; Senior-Level and Scientific and Professional positions; and of attorneys and law students regardless of grade or pay in the Department.

(ii) The appointment of special attorneys and special assistants to the Attorney General (28 U.S.C. 515(b));

(iii) The appointment of Assistant U.S. Trustees and fixing of their compensation; and

(iv) The approval of the appointment by U.S. Trustees of standing trustees and the fixing of their maximum annual compensation and percentage fees as provided in 28 U.S.C. 587(e).

(v) The appointment, employment, separation, and general administration of Assistant United States Attorneys and other attorneys to assist United States Attorneys when the public interest so requires and the fixing of their salaries.

(2) Administer the Department's recruitment programs for law graduates and law students.

(3) Coordinate Departmental liaison with White House Staff and the Executive Office of the President.

(4) Coordinate and control the Department's reaction to civil disturbances and terrorism.

(5) Perform such other duties and functions as may be assigned from time to time by the Attorney General.

(c) The Deputy Attorney General may redelegate the authority provided in paragraphs (b)(1)(i), (ii), (iii), (v), and paragraph (b)(2) of this section to take final action in matters pertaining to the:

(1) Appointment, employment, pay, separation, and general administration of personnel, including attorneys, in the Senior Executive Service or the equivalent, and Senior-Level and Scientific and Professional positions;

(2) Appointment, employment, pay, separation, and general administration of attorneys and law students regardless of grade or pay;

(3) Appointment of special attorneys and special assistants to the Attorney General pursuant to 28 U.S.C. 515(b);

(4) Appointment of Assistant United States Trustees and the fixing of their compensation;

(5) Appointment, employment, separation, and general administration of Assistant United States Attorneys and other attorneys to assist United States Attorneys when the public interest so requires and the fixing of their salaries; and

(6) Administration of the Department's recruitment programs for law graduates and law students.

(d) The Deputy Attorney General may redelegate the authority provided in paragraph (b)(1)(iv) of this section to take final action in matters pertaining to the approval of the appointment by U.S. Trustees of standing trustees and

the fixing of their maximum annual compensation and percentage fees as provided in 28 U.S.C. 587(e) to the Director of the Executive Office for U.S. Trustees.

(e) The officials to whom the Deputy Attorney General delegates authority under paragraph (c) of this section and any of the officials who may be otherwise authorized by the Deputy Attorney General to perform any other attorney personnel duties may redelegate those authorities and duties.

(f) The Deputy Attorney General is authorized, and may delegate authority to the Director of the Asylum Policy and Review Unit within the Office of Legal Policy, to:

(1) Compile and disseminate to Immigration and Naturalization Service (INS) officers information concerning the persecution of persons in countries on account of race, religion, nationality, membership in a particular social group, or political opinion.

(2) Review cases decided by the Board of Immigration Appeals pursuant to 8 CFR 3.1(h)(1)(i);

(3) Review INS asylum decisions in cases which the Deputy Attorney General directs INS to refer to him.

(4) Assist INS in conducting training concerning asylum and assist in resolving questions of policy that may arise.

(g) The Deputy Attorney General is authorized to exercise the authority vested in the Attorney General under section 528(a), Public Law 101–509, to accept from federal departments and agencies the services of attorneys and non-law enforcement personnel to assist the Department of Justice in the investigation and prosecution of fraud or other criminal or unlawful activity in or against any federally insured financial institution or the Resolution Trust Corporation, and to supervise such personnel in the conduct of such investigations and prosecutions.

(h) Notwithstanding paragraphs (a) and (b) of this section, authority to take final action in matters pertaining to the appointment, employment, pay, separation, and general administration of the following Department employees is reserved to the Attorney General:

(1) Employees in the Offices of the Attorney General and the Deputy Attorney General;

(2) Employees appointed to a Schedule C position established under 5 CFR part 213, or to a position that meets the same criteria as a Schedule C position; and

(3) Any Senior Executive Service position in which the incumbent serves under other than a career appointment.

[Order No. 960–81, 46 FR 52340, Oct. 27, 1981, as amended by Order No. 1063–84, 49 FR 32065, Aug. 10, 1984; Order No. 1097–85, 50 FR 25708, June 21, 1985; Order No. 1176–87, 52 FR 11044, Apr. 7, 1987; Order No. 1251–88, 53 FR 5370, Feb. 24, 1988; Order No. 1479–91, 56 FR 10510, Mar. 13, 1991; Order No. 1949–95, 60 FR 9777, Feb. 22, 1995; Order No. 2800–2006, 71 FR 6207, Feb. 7, 2006]

§ 0.17 Office of Investigative Agency Policies.

(a) *Organization*. The Office of Investigative Agency Policies is headed by a Director appointed by the Attorney General. The Director shall be responsible to, and report directly to, the Deputy Attorney General, and shall serve at the pleasure of the Attorney General. The Director shall be chosen from among the heads of the criminal investigative agencies of the Department, i.e., the Federal Bureau of Investigation, Drug Enforcement Administration, United States Marshals Service and Immigration and Naturalization Service. The Director shall serve concurrently as the Director of Investigative Agency Policies and as head of the agency for which he or she was nominated and confirmed. The Director shall be supported by a staff consisting of personnel detailed from the criminal investigative agencies of the Department, and from the Criminal Division. The staff shall be nominated by these various agencies, subject to the approval of the Director.

(b) *Functions*. Subject to the general supervision and direction of the Attorney General and Deputy Attorney General, the Director shall in the areas of overlapping jurisdiction of the criminal investigative agencies:

(1) Take all steps necessary to improve coordination among the criminal investigative agencies of the Department, both within the United States and abroad;

(2) Assure, to the extent appropriate, consistent operational guidelines for

the criminal investigative agencies of the Department;

(3) Establish procedures, structures and mechanisms for coordinating the collection and dissemination of intelligence relating to the Department's law enforcement responsibilities;

(4) Establish procedures and policies relating to procurement for the criminal investigative agencies of the Department, including but not limited to procurement of communications and computer systems;

(5) Determine and establish procedures for the coordination of all automation systems;

(6) Determine and establish plans to ensure the effective deployment of criminal investigative agency task forces;

(7) Establish procedures for coordinating the apprehension of fugitives;

(8) Establish programs to coordinate training among the criminal investigative agencies of the Department;

(9) Provide advice to the Attorney General and the Deputy Attorney General on all investigative policies, procedures and activities that warrant uniform treatment or coordination among the criminal investigative agencies of the Department;

(10) Provide advice to the Attorney General and the Deputy Attorney General on the budgetary and resource requests of the criminal investigative agencies of the Department;

(11) Perform such other functions as may be necessary for the effective policy-level coordination of criminal investigations by the criminal investigative agencies of the Department, particularly with respect to drug trafficking, fugitive apprehension, violence, and related areas, and for the elimination of waste and duplication in these functions.

(12) Perform such special duties as may be assigned by the Attorney General or the Deputy Attorney General from time to time.

(c) *Cooperation*. Officials of the Federal Bureau of Investigation, the Drug Enforcement Administration, the United States Marshals Service, the Immigration and Naturalization Service and all other components of the Department that may be requested by the Director of Investigative Agency Policies shall provide such information as the Director may request.

(d) *Review*. Prior to making any decision having a significant impact on any criminal investigative agency of the Department, the Director shall consult with the head of such agency, or the designee of the head of such agency. Any head of a criminal investigative agency shall have an opportunity to seek review of any decision of the Director by the Deputy Attorney General or the Attorney General.

(e) *Scope*. Nothing in this section shall be interpreted to alter or diminish the responsibilities of the Department's criminal investigative agencies, or of other components of the Department, including the Criminal Division and the United States Attorneys, in the investigation and prosecution of violations of federal criminal law.

(f) *Reservation*. This policy is set forth solely for the purpose of internal Department of Justice guidance. It is not intended to, does not, and may not be relied upon to create any rights, substantive or procedural, that are enforceable at law by any party in any matter, civil or criminal, nor does it place any limitations on otherwise lawful investigative or litigative prerogatives of the Department of Justice.

[Order No. 1814–93, 58 FR 62260, Nov. 26, 1993]

§0.18a Office of Small and Disadvantaged Business Utilization.

The Office of Small and Disadvantaged Business Utilization is headed by a Director appointed by the Attorney General, who shall be responsible to, and report directly to, the Deputy Attorney General. Subject to the general supervision and direction of the Deputy Attorney General, the Director shall:

(a) Be responsible for the implementation and execution of the functions and duties required by sections 637 and 644 of title 15 U.S. Code;

(b) Establish Department goals for the participation by small businesses, including small businesses owned and controlled by socially and economically disadvantaged individuals, in Department procurement contracts;

(c) Have supervisory authority over Department personnel to the extent that the functions and duties of such personnel relate to the functions and

duties described in paragraph (a) of this section;

(d) Provide resource information and technical training and assistance regarding utilization of small businesses, including small businesses owned and controlled by socially and economically disadvantaged individuals, to Department personnel who perform procurement functions;

(e) Assign a small business technical adviser to any Department offices to which the Small Business Administration assigns a procurement center representative, in accordance with section 644(k)(6) of title 15 U.S. Code;

(f) Develop and implement appropriate outreach programs to include small minority businesses in procurement contracts;

(g) Cooperate and consult regularly with the Small Business Administration with respect to the functions and duties described in paragraph (a) of this section;

(h) Review, evaluate and report to the Deputy Attorney General on the performance of organizational units of the Department in accomplishing the goals for utilization of small and disadvantaged businesses; and

(i) Prepare the Department's annual report to the Small Business Administration on the extent of participation by small and disadvantaged businesses in Department procurement contracts.

[Order No. 906–80, 45 FR 52145, Aug. 6, 1980]

Subpart C–1—Office of the Associate Attorney General

§ 0.19 Associate Attorney General.

(a) The Associate Attorney General shall advise and assist the Attorney General and the Deputy Attorney General in formulating and implementing Departmental policies and programs. The Associate Attorney General shall also provide overall supervision and direction to organizational units as assigned. In addition the Associate Attorney General shall:

(1) Exercise the power and the authority vested in the Attorney General to take final action in matters pertaining to the appointment, employment, pay, separation, and general administration of attorneys and law students in pay grades GS–15 and below in organizational units subject to his direction.

(2) Perform such other duties as may be especially assigned from time to time by the Attorney General.

(3) Exercise the power and authority vested in the Attorney General to authorize the Director of the U.S. Marshals Service to deputize persons to perform the functions of a Deputy U.S. Marshal.

(b) The Associate Attorney General may redelegate the authority provided in paragraph (a)(1) of this section to the Director, Office of Attorney Recruitment and Management.

(c) The Associate Attorney General is the Attorney General's designee for purposes of determining whether, under part 39 of this title, a handicapped person can achieve the purpose of a program without fundamental changes in its nature, and whether an action would result in a fundamental alteration in the nature of a program or activity or in undue financial and administrative burdens. The Associate Attorney General may not redelegate this authority.

(d) Notwithstanding paragraph (b) of this section, authority to take final action in matters pertaining to the appointment, employment, pay, separation, and general administration of the following Department employees is reserved to the Attorney General:

(1) Employees in the Office of the Associate Attorney General;

(2) Employees appointed to a Schedule C position established under 5 CFR part 213, or to a position that meets the same criteria as a Schedule C position; and

(3) Any Senior Executive Service position in which the incumbent serves under other than a career appointment.

[Order No. 960–81, 46 FR 52341, Oct. 27, 1981, as amended by Order No. 1047–84, 49 FR 6485, Feb. 22, 1984; Order No. 1106–85, 50 FR 36055, Sept. 5, 1985; Order No. 1251–88, 53 FR 5370, Feb. 24, 1988; Order No. 2800–2006, 71 FR 6207, Feb. 7, 2006]

Subpart D—Office of the Solicitor General

§0.20 General functions.

The following-described matters are assigned to, and shall be conducted, handled, or supervised by, the Solicitor General, in consultation with each agency or official concerned:

(a) Conducting, or assigning and supervising, all Supreme Court cases, including appeals, petitions for and in opposition to certiorari, briefs and arguments, and, in accordance with §0.163, settlement thereof.

(b) Determining whether, and to what extent, appeals will be taken by the Government to all appellate courts (including petitions for rehearing *en banc* and petitions to such courts for the issuance of extraordinary writs) and, in accordance with §0.163, advising on the approval of settlements of cases in which he had determined that an appeal would be taken.

(c) Determining whether a brief *amicus curiae* will be filed by the Government, or whether the Government will intervene, in any appellate court.

(d) Assisting the Attorney General, the Deputy Attorney General and the Associate Attorney General in the development of broad Department program policy.

[Order No. 423–69, 34 FR 20388, Dec. 31, 1969, as amended by Order No. 445–70, 35 FR 19397, Dec. 23, 1970; Order No. 960–81, 46 FR 52341, Oct. 27, 1981]

§0.21 Authorizing intervention by the Government in certain cases.

The Solicitor General may in consultation with each agency or official concerned, authorize intervention by the Government in cases involving the constitutionality of acts of Congress.

Subpart D–1—Executive Office for U.S. Attorneys

§0.22 General functions.

The Executive Office for United States Attorneys shall be under the direction of a Director who shall:

(a) Provide general executive assistance and supervision to the offices of the U.S. Attorneys, including:

(1) Evaluating the performance of the offices of the U.S. Attorneys, making appropriate reports and inspections and taking corrective action were indicated.

(2) Coordinating and directing the relationship of the offices of the U.S. Attorneys with other organizational units of the Department of Justice.

(b) Publish and maintain a U.S. Attorneys' Manual and a United States Attorneys' Bulletin for the internal guidance of the U.S. Attorneys' offices and those other organizational units of the Department concerned with litigation.

(c) Supervise the operation of the Office of Legal Education, the Attorney General's Advocacy Institute and the Legal Education Institute, which shall develop, conduct and authorize the training of all Federal legal personnel.

(d) Provide the Attorney General's Advisory Committee of United States Attorneys with such staff assistance and funds as are reasonably necessary to carry out the Committee's responsibilities (28 CFR 0.10(d)).

(e) Establish policy and procedures for the satisfaction, collection, or recovery of criminal fines, special assessments, penalties, interest, bail bond forfeitures, restitution, and court costs in criminal cases consistent with §0.171 of this chapter.

[Order No. 960–81, 46 FR 52341, Oct. 27, 1981, as amended by Order No. 1413–90, 55 FR 19064, May 8, 1990]

Subpart D–2—Office of Legal Policy

§0.23 General functions.

The Office of Legal Policy shall be headed by an Assistant Attorney General. The principal responsibilities of the Office shall be to plan, develop, and coordinate the implementation of major policy initiatives of high priority to the Department and to the Administration. In addition, the Assistant Attorney General, Office of Legal Policy, shall:

(a) Examine and study legislation and other policy proposals and coordinate Departmental efforts to secure enactment of those of special interest to the Department and the Administration.

(b) Assist the Attorney General and the Deputy Attorney General in fulfilling responsibilities of the Federal Legal Council to promote coordination and communication among Federal legal offices with the goal of achieving effective, consistent, and efficient management of legal resources throughout the Federal Government.

(c) Manage and coordinate the discharge of Departmental responsibilities related to the Freedom of Information Act (5 U.S.C. 552) and the Privacy Act (5 U.S.C. 552a), including coordination and implementation of policy development and compliance within executive agencies and Departmental units relative to the Freedom on Information Act and within Departmental units relative to the Privacy Act; and supervise the Office of Information and Privacy which will, except as otherwise directed by the Attorney General, act on appeals taken from Departmental denials of access to records under the Privacy Act and the Freedom of Information Act.

(d) Advise and assist the Attorney General and the Deputy Attorney General regarding the selection and appointment of Federal judges.

(e) Administer the Federal Justice Research Program.

(f) Represent the Department on the Administrative Conference of the United States and, as appropriate, on regulatory reform matters.

(g) Participate, as appropriate, in internal budget hearings of the Department with regard to policy implications of resource allocations and resource implications of major policy initiatives; and advise the Assistant Attorney General for Administration with regard to information requirements for Departmental policy formulation.

(h) Advise appropriate Departmental officials, from time to time, on investigation, litigation, negotiation, penal, or correctional policies to insure the compatibility of those policies with overall Departmental goals.

(i) Perform such other duties and functions as may be specially assigned by the Attorney General and the Deputy Attorney General.

In carrying out his responsibilities under this section, the Assistant Attorney General, Office of Legal Policy, shall have the right to call upon the relevant Departmental units for personnel and other assistance.

[Order No. 960–81, 46 FR 52341, Oct. 27, 1981, as amended by Order No. 1054–84, 49 FR 10118, Mar. 19, 1984; Order No. 1055–84, 49 FR 12253, Mar. 29, 1984]

§ 0.23a Office of Information and Privacy.

(a) There is established, in the Office of Legal Policy, the Office of Information and Privacy, which, under the general supervision and direction of the Assistant Attorney General, Office of Legal Policy, shall:

(1) Act on behalf of the Attorney General on Freedom of Information Act and Privacy Act appeals under §§ 16.8, 16.48, 16.50(d) and 16.52, respectively, under the supervision of the Assistant Attorney General, Office of Legal Policy, except that:

(i) In the case of a denial of a request by the Assistant Attorney General, Office of Legal Policy, the Attorney General or his designee shall act on the appeal, and

(ii) A denial of a request by the Attorney General shall constitute the final action of the Department on that request.

(2) Provide staff support to the Department Review Committee, established by § 17.148 of this chapter.

(3) Advise executive agencies and organizational units of the Department on questions relating to interpretation and application of the Freedom of Information Act and advise the Department on questions relating to interpretation and application of the Privacy Act.

(4) Coordinate the development and implementation of and compliance with Freedom of Information Act policy within the executive agencies and all organizational units of the Department.

(5) Undertake, arrange, or support training and informational programs concerning both acts for the executive agencies and the Department.

(6) Undertake such other responsibilities as may be assigned by the Assistant Attorney General, Office of Legal Policy.

(b) All federal agencies which intend to deny Freedom of Information Act requests raising novel issues should consult with the Office of Information and Privacy to the extent practicable.

[Order No. 973–82, 47 FR 10809, Mar. 12, 1982, as amended by Order No. 1055–84, 49 FR 12253, Mar. 29, 1984]

§0.23b Office of Asylum Policy and Review.

There is established, in the Office of Legal Policy, the Asylum Policy and Review Unit, headed by a Director, under the general supervision and direction of the Assistant Attorney General, Office of Legal Policy, and exercising such duties as the Deputy Attorney General delegates pursuant to 28 CFR 0.15(f) or otherwise assigns to it.

[Order No. 1176–87, 52 FR 11044, Apr. 7, 1987]

Subpart E—Office of Legal Counsel

§0.25 General functions.

The following-described matters are assigned to, and shall be conducted, handled, or supervised by, the Assistant Attorney General, Office of Legal Counsel:

(a) Preparing the formal opinions of the Attorney General; rendering informal opinions and legal advice to the various agencies of the Government; and assisting the Attorney General in the performance of his functions as legal adviser to the President and as a member of, and legal adviser to, the Cabinet.

(b) Preparing and making necessary revisions of proposed Executive orders and proclamations, and advising as to their form and legality prior to their transmission to the President; and performing like functions with respect to regulations and other similar matters which require the approval of the President or the Attorney General.

(c) Rendering opinions to the Attorney General and to the heads of the various organizational units of the Department on questions of law arising in the administration of the Department.

(d) Approving proposed orders of the Attorney General, and orders which require the approval of the Attorney General, as to form and legality and as to consistency and conformity with existing orders and memoranda.

(e) Coordinating the work of the Department of Justice with respect to the participation of the United States in the United Nations and related international organizations and advising with respect to the legal aspects of treaties and other international agreements.

(f) When requested, advising the Attorney General in connection with his review of decisions of the Board of Immigration Appeals and other organizational units of the Department.

(g) Designating within the Office of Legal Counsel:

(1) A liaison officer, and an alternate, as a representative of the Department in all matters concerning the filing of departmental documents with the Office of the Federal Register, and

(2) A certifying officer, and an alternate, to certify copies of documents required to be filed with the Office of the Federal Register (1 CFR 16.1).

(h) Approving certain blind trusts, as required by section 202(f)(4)(B) of the Ethics in Government Act of 1978, 92 Stat. 1843.

(i) Consulting with the Director of the Office of Government Ethics regarding the development of policies, rules, regulations, procedures and forms relating to ethics and conflicts of interest, as required by section 402 of the Ethics in Government Act of 1978, 92 Stat. 1862.

(j) Taking actions to ensure implementation of Executive Order 12612 (entitled ''Federalism''), including determining which Department policies have sufficient federalism implications to warrant preparation of a Federalism Assessment, reviewing Assessments for adequacy, and executing certifications for the Assessments.

(k) Performing such special duties as may be assigned by the Attorney General, the Deputy Attorney General, or the Associate Attorney General from time to time.

[Order 423–69, 34 FR 20388, Dec. 31, 1969, as amended by Order 445–70, 35 FR 19397, Dec. 23, 1970; Order 623–75, 40 FR 42746, Sept. 16, 1975; Order 960–81, 46 FR 52342, Oct. 27, 1981; Order 1054–84, 49 FR 10118, Mar. 19, 1984; Order 1260–88, 53 FR 9435, Mar. 23, 1988]

Subpart E–1—Office of International Programs

§ 0.26 Organization.

There shall be within the Office of the Deputy Attorney General an Office of International Programs.

(a) *Director*. The Office of International Programs shall be headed by a Director appointed by the Attorney General.

(b) *Functions*. The Director of the Office of International Programs shall discharge the following duties:

(1) Coordinate all proposals for the Department of Justice, or Department of Justice personnel, to provide foreign countries with training or technical assistance in the fields of law enforcement, administration of justice, legislation, and economic reform and democratic institution-building initiatives.

(2) Assist the Deputy Attorney General in coordinating the activities of the International Criminal Investigative Training Assistance Program and in coordinating responses to requests for international training and technical assistance submitted to the INTERPOL-U.S. National Central Bureau and other Department of Justice units.

(3) Serve as the focal point, on behalf of the Deputy Attorney General, for administrative matters involving international activities, including overseas staffing, of all Department of Justice units.

(4) Coordinate arrangements and preparations for contacts by the Attorney General and Deputy Attorney General with officials of foreign governments, foreign non-governmental organizations, and international organizations.

(5) As required, advise the Deputy Attorney General on matters relating to non-operational foreign travel by Department of Justice personnel.

(6) Serve as a primary liaison with the Department of State, with other appropriate federal, state and local agencies, and with appropriate non-governmental institutions, regarding training and technical assistance to foreign countries in the fields of law enforcement, administration of justice, legislation, and economic reform and democratic institution-building initiatives.

(7) Review and coordinate all planned and ongoing training and technical assistance activities in the fields of law enforcement, administration of justice, legislation, and economic reform and democratic institution-building initiatives by Department of Justice personnel in foreign countries.

(8) As needed, facilitate logistical arrangements for Department of Justice personnel to engage in approved training and technical assistance activities in the fields of law enforcement, administration of justice, legislation, and economic reform and democratic institution-building initiatives in foreign countries.

(9) Coordinate Department of Justice views on proposals for entities outside the Department, including international organizations, to conduct training and technical assistance activities in the fields of law enforcement, administration of justice, legislation, and economic reform and democratic institution-building initiatives in or for foreign countries.

(10) Serve as a focal point, on behalf of the Deputy Attorney General, for resolution, within the Department of Justice, of issues regarding international policy.

(11) Coordinate, on behalf of the Deputy Attorney General, legislation relevant to Department of Justice training and technical assistance activities in or for foreign countries.

(12) Perform such other duties and functions as may be specially assigned by the Deputy Attorney General.

(c) *Relationship with other Departmental units*. The Office of International Programs shall:

(1) Maintain continual liaison with interested components of the Department on international matters.

(2) Develop and administer effective mechanisms to ensure thorough consideration, by interested components of the Department, of all proposals for international training and technical assistance by Department personnel.

(d) *Redelegation of authority*. The Director is authorized to redelegate to any subordinate member of the Office of International Programs any of the

authority, functions or duties vested in the Director by this subpart.

[Order No. 1606–92, 57 FR 32438, July 22, 1992]

Subpart E–2—Office of Legislative and Intergovernmental Affairs

§0.27 General functions.

The following-described matters are assigned to, and shall be conducted, handled, or supervised by, the Assistant Attorney General, Office of Legislative and Intergovernmental Affairs:

(a) Maintaining liaison between the Department and the Congress.

(b) Reviewing, coordinating and submitting departmental legislative reports.

(c) Coordinating the preparation and submission of proposed departmental legislation.

(d) Maintaining liaison between the Department and State and local governments and their representative organizations.

(e) Consulting with State and local officials and their representative organizations to inform them of Department policy and law enforcement initiatives that may affect State and local governments.

(f) Performing such other duties respecting legislative matters as may be assigned by the Attorney General, the Deputy Attorney General, or the Associate Attorney General.

[Order No. 504–73, 38 FR 6893, Mar. 14, 1973, as amended by Order No. 623–75, 40 FR 42746, Sept. 16, 1975; Order No. 960–81, 46 FR 52343, Oct. 27, 1981; Order No. 1054–84, 49 FR 10118, Mar. 19, 1984. Redesignated by Order No. 1497–91, 56 FR 25629, June 5, 1991]

Subpart E–3—Office of Public Affairs

§0.28 General functions.

The Office of Public Affairs is headed by a Director of Public Affairs who shall:

(a) Handle matters pertaining to relations with the public generally.

(b) Disseminate information to the press, the radio and television services, the public, members of Congress, officials of Government, schools, colleges, and civic organizations.

(c) Coordinate the relations of the Department of Justice with the news media.

(d) Serve as a central agency for information relating to the work and activities of all agencies of the Department.

(e) Prepare public statements and news releases.

(f) Coordinate Department publications.

(g) Assist the Attorney General and other officials of the Department in preparing for news conferences, interviews and other contacts with the news media.

[Order No. 960–81, 46 FR 52343, Oct. 27, 1981. Redesignated by Order No. 1497–91, 56 FR 25629, June 5, 1991]

Subpart E–4—Office of the Inspector General

SOURCE: Order No. 2167–98, 63 FR 36847, July 8, 1998, unless otherwise noted.

§0.29 Organization.

(a) The Office of the Inspector General consists of an immediate office, which is composed of the Inspector General, the Deputy Inspector General, and the Office of the General Counsel, and five major divisions, each headed by an Assistant Inspector General. The five OIG divisions are: Audit; Investigations; Evaluation and Inspections; Oversight and Review; and Management and Planning.

(b) The OIG is headquartered in Washington, DC. Investigations Field Offices and Audit Regional Offices are located in Washington, DC and throughout the United States. For a listing of specific office locations, see the OIG Internet Website at *http://www.usdoj.gov/oig*.

[Order No. 2167–98, 63 FR 36847, July 8, 1998, as amended by Order No. 2835–2006, 71 FR 54413, Sept. 15, 2006]

§0.29a General functions.

(a) The OIG is a statutorily created independent entity within the Department of Justice subject to the general supervision of the Attorney General that conducts and supervises audits, inspections, and investigations relating to the programs and operations of the

Department; recommends policies to promote economy, efficiency, and effectiveness and to prevent and detect fraud and abuse in Departmental programs and operations; and keeps the Attorney General and Congress informed about the problems and deficiencies relating to the administration of the Department and the necessity for and progress of corrective action.

(b) In order to carry out its responsibilities the OIG:

(1) Audits and inspects Department programs and operations as well as non-Department entities contracting with or receiving benefits from the Department;

(2) Investigates allegations of criminal wrongdoing and administrative misconduct on the part of Department employees, as provided in § 0.29c of this subpart;

(3) Investigates allegations that individuals and entities outside of the Department have engaged in activity that adversely affects the Department's programs and operations;

(4) Undertakes sensitive investigations of Department operations and/or personnel, often at the request of senior Department officials or Congress.

§ 0.29b Reporting allegations of waste, fraud, or abuse.

Employees shall report evidence and non-frivolous allegations of waste, fraud, or abuse relating to the programs and operations of the Department to the OIG or to a supervisor for referral to the OIG.

§ 0.29c Reporting allegations of employee misconduct.

(a) *Reporting to the OIG.* Evidence and non-frivolous allegations of criminal wrongdoing or serious administrative misconduct by Department employees shall be reported to the OIG, or to a supervisor or a Department component's internal affairs office for referral to the OIG, except as provided in paragraph (b) of this section.

(b) *Reporting to the Department's Office of Professional Responsibility (DOJ-OPR).* Employees shall report to DOJ-OPR evidence and non-frivolous allegations of serious misconduct by Department attorneys that relate to the exercise of their authority to investigate, litigate, or provide legal advice. Employees shall also report to DOJ-OPR evidence and non-frivolous allegations of serious misconduct by Department law enforcement personnel that are related to allegations of misconduct by a Department attorney that relate to the exercise of the attorney's authority to investigate, litigate, or provide legal advice.

(c) *Reporting to the Drug Enforcement Administration Office of Professional Responsibility (DEA-OPR).* Evidence and non-frivolous allegations of serious misconduct by employees of the Drug Enforcement Administration (DEA) shall be reported by the OIG to the Drug Enforcement Administration Office of Professional Responsibility (DEA-OPR) or to the Deputy Attorney General.

(d) *Reporting to the Federal Bureau of Investigation Office of Professional Responsibility (FBI-OPR).* Evidence and non-frivolous allegations of serious misconduct by employees of the Federal Bureau of Investigation (FBI) shall be reported by the OIG to the FBI-OPR except as provided in § 0.29d of this subpart, or to the Deputy Attorney General.

[Order No. 2167–98, 63 FR 36847, July 8, 1998, as amended by Order No. 2492–2001, 66 FR 37903, July 20, 2001]

§ 0.29d Whistleblower protection for FBI employees.

(a) *Protected disclosures by FBI employees.* Disclosures of information by an FBI employee that the employee reasonably believes evidences a violation of any law, rule, or regulation, or mismanagement, gross waste of funds, an abuse of authority, or a substantial and specific danger to public health or safety are protected disclosures when they are reported as provided in § 27.1 of this chapter. Any office or official (other than the OIG or DOJ-OPR) receiving a protected disclosure shall promptly report such disclosure to the OIG or DOJ-OPR. The OIG or DOJ-OPR may refer such allegations to FBI-OPR for investigation unless the Deputy Attorney General determines that such referral shall not be made.

(b) *Allegations of retaliation against FBI employees.* Allegations of retaliation against an employee of the FBI

who makes a protected disclosure shall be reported to the OIG, DOJ-OPR, or the Deputy Attorney General.

[Order No. 2167–98, 63 FR 36847, July 8, 1998, as amended by Order No. 2492–2001, 66 FR 37903, July 20, 2001]

§0.29e Relationship to other departmental units.

(a) The OIG works cooperatively with other Department components to assure that allegations of employee misconduct are investigated by the appropriate entity:

(1) The OIG refers to DOJ-OPR allegations of misconduct within DOJ-OPR's jurisdiction and may refer to another component the investigation of an allegation of misconduct on the part of an employee of that component;

(2) The OIG may refer to a Department component's internal affairs office allegations of misconduct within that office's jurisdiction or may investigate such allegations on its own;

(3) DOJ-OPR refers to the OIG allegations involving misconduct by Department attorneys or investigators that do not relate to the exercise of an attorney's authority to investigate, litigate, or provide legal advice.

(4) The OIG and the FBI notify each other of the existence of criminal investigations that fall within their joint jurisdiction to investigate crimes involving the operations of the Department, except where such notification could compromise the integrity of an investigation;

(5) All Department components report to the OIG all non-frivolous allegations of criminal wrongdoing and serious administrative misconduct involving any of their employees except allegations involving Department attorneys and investigators that relate to an attorney's authority to litigate, investigate, or provide legal advice.

(6) At the request of the Inspector General, the Deputy Attorney General may assign to the OIG a matter within the investigative jurisdiction of DOJ-OPR. In such instances, the OIG shall either:

(i) Notify DOJ-OPR of its request to the Deputy Attorney General or

(ii) Request that the Deputy Attorney General determine that such notification would undermine the integrity of the investigation nor jeopardize the interests of the complainant.

(7) While an issue of investigative jurisdiction or assignment is pending before the Deputy Attorney General, neither the OIG DOJ-OPR shall undertake any investigative activity without authorization from the Deputy Attorney General.

(b) OIG investigations that result in findings of potential criminal misconduct or civil liability are referred to the appropriate prosecutorial or litigative office.

(c) The OIG advises DOJ-OPR of the existence and results of any investigation that reflects upon the ethics, competence, or integrity of a Department attorney for appropriate action by DOJ-OPR.

(d) OIG investigations that result in findings of administrative misconduct are reported to management for appropriate disposition.

[Order No. 2167–98, 63 FR 36847, July 8, 1998; 63 FR 40788, July 30, 1998, as amended by Order No. 2492–2001, 66 FR 37903, July 20, 2001]

§0.29f Confidentiality.

The Inspector General shall not, during the pendency of an investigation, disclose the identity of an employee who submits a complaint to the OIG without the employee's consent, unless the Inspector General determines that such disclosure is unavoidable in the course of the investigation.

§0.29g Reprisals.

Any employee who has authority to take, direct others to take, recommend, or approve any personnel action shall not, with respect to such authority, take or threaten to take any action against any employee as a reprisal for the employee making a complaint or disclosing information to the OIG unless the complaint was made or the information was disclosed with knowledge that it was false or with willful disregard for its truth or falsity.

§0.29h Specific authorities of the Inspector General.

The Inspector General is authorized to:

(a) Conduct investigations and issue reports relating to criminal wrongdoing and administrative misconduct of Department employees and administration of the programs and operations of the Department as are, in the judgment of the Inspector General, necessary or desirable;

(b) Receive and investigate complaints or information from an employee of the Department concerning the possible existence of an activity constituting a violation of law, rules, or regulations, or mismanagement, gross waste of funds, an abuse of authority, or a substantial and specific danger to the public health and safety;

(c) Have direct and prompt access to the Attorney General when necessary for any purpose pertaining to the performance of the functions and responsibilities of the OIG;

(d) Have access to all records, reports, audits, reviews, documents, papers, recommendations, or other material available to the Department and its components that relate to programs and operations with respect to which the OIG has responsibilities unless the Attorney General notifies the Inspector General, in writing, that such access shall not be available because it is necessary to prevent the disclosure of

(1) Sensitive information concerning ongoing civil or criminal investigations or proceedings;

(2) Undercover operations;

(3) The identity of confidential sources, including protected witnesses;

(4) Intelligence or counterintelligence matters; or

(5) Other matters the disclosure of which would constitute a serious threat to national security or significantly impair the national interests of the United States;

(e) Request such information or assistance as may be necessary for carrying out the duties and responsibilities of the OIG from any office, board, division, or component of the Department, and any Federal, State, or local governmental agency or unit thereof;

(f) Issue subpoenas to individuals, and entities, other than Federal government agencies, for the production of information, records, data, and other documentary evidence necessary to carry out the functions of the OIG;

(g) Obtain information from Federal government agencies by means other than subpoena and advise the head of such agency whenever information is unreasonably refused or not provided;

(h) Select, appoint, and employ such officers and employees as may be necessary for carrying out the functions, powers, and duties of the OIG;

(i) Employ on a temporary basis such experts and consultants as may be necessary to carry out the duties of the OIG;

(j) Enter into contracts and other arrangements for audits, studies, analyses, and other services with public agencies and with private persons, and to make such payments as may be necessary to carry out the duties of the OIG;

(k) Take from any person an oath, affirmation, or affidavit whenever necessary in the performance of the functions of the OIG.

[Order No. 2167–98, 63 FR 36847, July 8, 1998, as amended by Order No. 2492–2001, 66 FR 37903, July 20, 2001]

§ 0.29i Audit, inspection, and review authority.

The OIG is authorized to perform audits, inspections, and reviews of the programs and operations of the Department of Justice and of entities contracting with or obtaining benefits from the Department.

§ 0.29j Law enforcement authority.

Subject to guidelines promulgated by the Attorney General, Special Agents of the Office of the Inspector General are authorized to:

(a) Detect and assist in the prosecution of crimes in violation of the laws of the United States and to conduct such other investigations regarding matters that are within the jurisdiction of the Inspector General;

(b) Serve legal writs, summons, complaints, and subpoenas issued by the Inspector General or by a Federal grand jury;

(c) Receive, transport, and provide safekeeping of arrestees and other persons in the custody of the Attorney General or detained aliens;

(d) Arrest without warrant any person for an offense against the United States committed in the presence of

the Special Agent or whom the Special Agent has reasonable grounds to believe has committed or is committing a felony cognizable under the laws of the United States;

(e) Seek and execute search and arrest warrants;

(f) Carry firearms while on-duty; and

(g) Carry firearms while off-duty as authorized by the Inspector General.

[Order No. 2835–2006, 71 FR 54413, Sept. 15, 2006]

Subpart F—Community Relations Service

§0.30 General functions.

The following-described matters are assigned to, and shall be conducted, handled, or supervised by, the Director of the Community Relations Service:

(a) Exercise of the powers and performance of the functions vested in the Attorney General by sections 204(d), 205, 1002, and 1003(a) of the Civil Rights Act of 1964 (78 Stat. 267) and section 2 of Reorganization Plan No. 1 of 1966.

(b) Preparation and submission of the annual report to the Congress required by section 1004 of that Act.

[Order No. 423–69, 34 FR 20388, Dec. 31, 1969, as amended by Order No. 445–70, 35 FR 19397, Dec. 23, 1970; Order No. 699–77, 42 FR 15315, Mar. 21, 1977; Order No. 960–81, 46 FR 52343, Oct. 27, 1981]

§0.31 Designating officials to perform the functions of the Director.

(a) In case of a vacancy in the Office of the Director of the Community Relations Service, the Deputy Director of the Service shall perform the functions and duties of the Director.

(b) The Director is authorized, in case of absence from his office or in case of his inability or disqualification to act, to designate the Deputy Director to act in his stead. In unusual circumstances, or in the absence of the Deputy Director, a person other than the Deputy Director may be so designated by the Director.

§0.32 Applicability of existing departmental regulations.

Departmental regulations which are generally applicable to units or personnel of the Department of Justice shall be applicable with respect to the Community Relations Service and to the Director and personnel thereof, except to the extent, if any, that such regulations may be inconsistent with the intent and purposes of section 1003(b) of the Civil Rights Act of 1964.

Subpart F–1 [Reserved]

Subpart F–2—INTERPOL-United States National Central Bureau

§0.34 General functions.

The following functions are assigned to, and shall be conducted, handled, or supervised by, the Chief of the United States National Central Bureau, International Criminal Police Organization (INTERPOL—U.S. National Central Bureau), as authorized by statute and within guidelines prescribed by the Department of Justice, in conjunction with the Department of Treasury:

(a) Facilitate international law enforcement cooperation as the United States representative with the International Criminal Police Organization (INTERPOL), on behalf of the Attorney General, pursuant to 22 U.S.C. 263a.

(b) Represent the U.S. National Central Bureau at criminal law enforcement and international law enforcement conferences and symposia.

(c) Serve as a member of the Executive Committee of INTERPOL-United States National Central Bureau (INTERPOL-USNCB).

(d) Transmit information of a criminal justice, humanitarian, or other law enforcement related nature between National Central Bureaus of INTERPOL member countries, and law enforcement agencies within the United States and abroad; and respond to requests by law enforcement agencies, and other legitimate requests by appropriate organizations, institutions and individuals, when in agreement with the INTERPOL constitution.

(e) Coordinate and integrate information for investigations of an international nature and identify those involving patterns and trends of criminal activities.

(f) Conduct analyses of patterns of international criminal activities, when specific patterns are observed.

(g) Establish and collect user fees to process name checks and background records for licensing, humanitarian and other non-law enforcement purposes.

[Order No. 960–81, 46 FR 52343, Oct. 27, 1981, as amended by Order No. 1295–88, 53 FR 30990, Aug. 17, 1988; Order No. 1441–90, 55 FR 32403, Aug. 9, 1990; Order No. 1491–91, 56 FR 21600, May 10, 1991]

Subpart G—Office of the Pardon Attorney

CROSS REFERENCE: For regulations pertaining to the Office of Pardon Attorney, see part 1 of this chapter.

§ 0.35 General functions; delegation of authority.

Under the general supervision of the Attorney General and the direction of the Associate Attorney General, the following-described matters are assigned to, and shall be conducted, handled or supervised by, the Pardon Attorney but subject to the limitation contained in § 0.36 of this chapter.

(a) Exercise of the powers and performance of the functions vested in the Attorney General by §§ 1.1 through 1.8 inclusive of this chapter.

(b) Performance of such other duties as may be assigned by the Attorney General or the Associate Attorney General.

[Order No. 1012–83, 48 FR 22290, May 18, 1983]

§ 0.36 Recommendations.

The Pardon Attorney shall submit all recommendations in clemency cases through the Associate Attorney General and the Associate Attorney General shall exercise such discretion and authority as is appropriate and necessary for the handling and transmittal of such recommendations to the President.

[Order No. 1012–83, 48 FR 22290, May 18, 1983]

Subpart G–1—Executive Office for United States Trustees

§ 0.37 Organization.

The Executive Office for United States Trustees shall be headed by a Director appointed by the Attorney General.

[Order No. 960–81, 46 FR 52344, Oct. 27, 1981]

§ 0.38 Functions.

The Director shall have responsibility for assisting the Attorney General and the Deputy Attorney General in supervising and providing general coordination and assistance to United States Trustees. The Director shall perform such duties relating to such functions and others under the Bankruptcy Reform Act of 1978 as may be assigned by the Attorney General or the Deputy Attorney General.

[Order No. 960–81, 46 FR 52344, Oct. 27, 1981]

Subpart G–2—Office of Professional Responsibility

SOURCE: Order No. 2835–2006, 71 FR 54414, Sept. 15, 2006, unless otherwise noted.

§ 0.39 Office of Professional Responsibility.

The Office of Professional Responsibility (DOJ–OPR) shall be headed by a Counsel, who shall be appointed by the Attorney General and subject to the general supervision and direction of the Attorney General or, whenever appropriate, the Deputy Attorney General.

§ 0.39a Functions.

(a) The Counsel shall:

(1) Receive, review, investigate and refer for appropriate action allegations of misconduct involving Department attorneys that relate to the exercise of their authority to investigate, litigate or provide legal advice, as well as allegations of misconduct by law enforcement personnel when such allegations are related to allegations of attorney misconduct within the jurisdiction of DOJ–OPR;

(2) Receive, review, investigate and refer for appropriate action;

(i) Any allegation of reprisal against an employee or applicant who discloses information pursuant to paragraph (a)(1) of this section; and

(ii) Allegations of reprisal taken against any Federal Bureau of Investigation employee for disclosing information pursuant to 28 CFR 27.1;

(3) Report to the responsible Department official the results of inquiries and investigations arising under paragraphs (a)(1) and (2) of this section, and, when appropriate, make recommendations for disciplinary and other corrective action;

(4) Refer any allegation not arising under paragraphs (a)(1) or (2) of this section to the Inspector General or another appropriate Department official;

(5) Notify any person who has made allegations pursuant to paragraphs (a)(1) or (2) of this section and any person who was the subject of such allegations of the completion and, as appropriate, the results of, any inquiry or investigation undertaken, where such notification is permitted by law and consistent with the law enforcement interests of the Department;

(6) Engage in liaison with the bar disciplinary authorities of the states, territories, and the District of Columbia with respect to professional misconduct matters;

(7) Submit an annual report to the Attorney General summarizing the work of the Office;

(8) Submit recommendations to the Attorney General and the Deputy Attorney General on the need for changes in policies and procedures that become evident during the course of the Counsel's inquiries and investigations;

(9) Review proposals from Department employees to refer to appropriate licensing authorities apparent professional misconduct by attorneys outside the Department, and make such referrals where warranted, except that referrals made pursuant to 8 CFR 1003.106(d) do not require the Counsel's review; and

(10) Perform any other responsibilities assigned by the Attorney General or the Deputy Attorney General.

(b) For the purpose of paragraph (a)(2)(i) of this section, any disclosure by an employee or applicant to a supervisor, Professional Responsibility Officer, the Office of Professional Responsibility, the Office of the Inspector General, the Executive Office for United States Attorneys, or other appropriate individual or component shall constitute disclosure to the Attorney General or the Counsel.

§ 0.39b Confidentiality of information.

The Counsel shall not disclose the identity of any person submitting an allegation of misconduct or reprisal pursuant to 28 CFR 0.39a(a)(1) or (2) unless the person consents to the disclosure of his identity or the disclosure is necessary to carry out the authority of the Office of Professional Responsibility, including conducting an investigation or referring the allegation to another component.

§ 0.39c Relationship to other departmental units.

(a) Primary responsibility for assuring the maintenance of the highest standards of professional responsibility by Department employees rests with the heads of the offices, divisions, bureaus, and boards of the Department.

(b) The heads of the offices, divisions, bureaus, and boards shall assure that any judicial finding of misconduct or serious judicial criticism relating to the duties described in § 0.39(a)(1), or any nonfrivolous allegation of serious misconduct concerning an employee in their component and relating to those duties, is reported to the Counsel.

(c) The heads of the offices, divisions, bureaus, and boards shall provide information and assistance requested by the Counsel in connection with any inquiries or investigations conducted by the Counsel or by the Counsel's staff. As set forth in part 45, all Department personnel, including the subject(s) of any inquiry or investigation, shall cooperate fully with any investigation conducted by the Counsel or his designee.

Subpart H—Antitrust Division

§ 0.40 General functions.

The following functions are assigned to and shall be conducted, handled, or supervised by, the Assistant Attorney General, Antitrust Division:

(a) General enforcement, by criminal and civil proceedings, of the Federal antitrust laws and other laws relating to the protection of competition and the prohibition of restraints of trade and monopolization, including conduct of surveys of possible violations of antitrust laws, conduct of grand jury

proceedings, issuance and enforcement of civil investigative demands, civil actions to obtain orders and injunctions, civil actions to recover forfeitures or damages for injuries sustained by the United States as a result of antitrust law violations, proceedings to enforce compliance with final judgments in antitrust suits and negotiation of consent judgments in civil actions, civil actions to recover penalties, criminal actions to impose penalties including actions for the imposition of penalties for conspiring to defraud the Federal Government by violation of the antitrust laws, participation as *amicus curiae* in private antitrust litigation; and prosecution or defense of appeals in antitrust proceedings.

(b) Intervention or participation before administrative agencies functioning wholly or partly under regulatory statutes in administrative proceedings which require consideration of the antitrust laws or competitive policies, including such agencies as the Civil Aeronautics Board, Interstate Commerce Commission, Federal Communications Commission, Federal Maritime Commission, Federal Energy Regulatory Commission, Federal Reserve Board, Federal Trade Commission, Nuclear Regulatory Commission, and Securities and Exchange Commission, except proceedings referred to any agency by a federal court as an incident to litigation being conducted under the supervision of another Division in this Department.

(c) Developing procedures to implement, receiving information, maintaining records, and preparing reports by the Attorney General to the President as required by Executive Order 10936 of April 25, 1961 relating to identical bids submitted to Federal and State departments and agencies.

(d) As the delegate of the Attorney General furnishing reports and summaries thereof respecting the competitive factors involved in proposed mergers or consolidations of insured banks required by the Federal Deposit Insurance Act, as amended (12 U.S.C. 1828(c)), furnishing reports respecting the competitive factors involved in proposed acquisitions under the Savings and Loan Holding Company Amendments of 1967 (12 U.S.C. 1730a(e)), furnishing advice regarding the proposed disposition of surplus Government property required by the Federal Property and Administrative Services Act of 1949, as amended (40 U.S.C. 488), furnishing reports regarding deepwater port licenses under the Deepwater Port Act of 1974 (33 U.S.C. 1506), furnishing advice and reports regarding federal coal leases under the Federal Coal Leasing Amendments Act of 1976 (30 U.S.C. 184(1)), furnishing advice on oil and gas leasing under the Outer Continental Shelf Lands Act Amendments of 1978 (43 U.S.C. 1334(a) 1334(f)(3). 1337), furnishing reports and recommendations regarding the issuance of licenses for exploration or permits for commercial recovery of deep seabed hard minerals pursuant to the Deep Seabed Hard Minerals Resources Act (30 U.S.C. 1413(d)), furnishing advice or reports regarding contracts or operating agreements concerning exploration, development or production of petroleum reserves under the Naval Petroleum Reserves Production Act of 1976 (10 U.S.C. 7430(g)(1)), and furnishing advice regarding nuclear licenses under the Atomic Energy Act of 1954 (42 U.S.C. 2135).

(e) Preparing the approval or disapproval of the Attorney General whenever such action is required by statute from the standpoint of the antitrust laws as a prerequisite to the development of Defense Production Act voluntary programs or agreements and small business production or raw material pools, the national defense program and atomic energy matters.

(f) Assembling information and preparing reports required or requested by the Congress or the Attorney General as to the effect upon the maintenance and preservation of competition under the free enterprise system of various Federal laws or programs, including the Defense Production Act of 1950, the Small Business Act, the Federal Coal Leasing Amendments Act of 1976 (30 U.S.C. 208–2), the Naval Petroleum Reserves Production Act of 1976 (10 U.S.C. 7431(b)(2)), and the joint resolution of July 28, 1955, giving consent to the Interstate Compact to Conserve Oil and Gas.

(g) Preparing for transmittal to the President, Congress, or other departments or agencies views or advice as to the propriety or effect of any action, program or practice upon the maintenance and preservation or competition under the free enterprise system.

(h) Representing the Attorney General on interdepartmental or interagency committees concerned with the maintenance and preservation of competition generally and in various sections of the economy and the operation of the free enterprise system and when authorized participating in conferences and committees with foreign governments and treaty organizations concerned with competition and restrictive business practices in international trade.

(i) Collecting fines, penalties, judgments, and forfeitures arising in antitrust cases.

(j) [Reserved]

(k) As the delegate of the Attorney General, performance of all functions which the Attorney General is required or authorized to perform by title III of Public Law 97–290 (15 U.S.C. 4011–4021) with respect to export trade certificates of review.

[Order No. 617–75, 40 FR 36118, Aug. 19, 1975, as amended by Order No. 699–77, 42 FR 15315, Mar. 21, 1977; Order No. 960–81, 46 FR 52344, Oct. 27, 1981; Order Nos. 1002–83, 1003–83, 48 FR 9522, 9523, Mar. 7, 1983]

§0.41 Special functions.

The following functions are assigned to, and shall be conducted, handled, or supervised by, the Assistant Attorney General, Antitrust Division:

(a) Institution of proceedings to impose penalties for violations of section 202(a) of the Communications Act of 1934 (48 Stat. 1070), as amended (47 U.S.C. 202(a)), which prohibits common carriers by wire or radio from unjustly or unreasonably discriminating among persons, classes of persons, or localities.

(b) Representing the United States in suits pending as of February 28, 1975, before three-judge district courts under sections 2321–2325 of title 28 of the U.S. Code, to enforce, suspend, enjoin, annul, or set aside, in whole or in part, any order of the Interstate Commerce Commission. (Pub. L. 93–584, Sec. 10, 88 Stat. 1917)

(c) Representing the United States in proceedings before courts of appeals to review orders of the Interstate Commerce Commission, the Federal Communications Commission, the Federal Maritime Commission and the Nuclear Regulatory Commission (28 U.S.C. 2341–2350).

(d) Representing the Civil Aeronautics Board, and the Secretary of the Treasury or his delegates under the Federal Alcohol Administration Act, in courts of appeals reviewing their respective administrative orders.

(e) Defending the Secretary of the Treasury or his delegates under the Federal Alcohol Administration Act, and the agencies named in paragraphs (c), (d) and (e) of this section or their officers against the injunctive actions brought in Federal courts when the matter which is the subject of the actions will ultimately be the subject of review under paragraph (c), (d), (e) or (g) of this section, or of an enforcement action under paragraph (b) of this section.

(f) Seeking review of or defending judgments rendered in proceedings under paragraphs (a) through (e) of this section.

(g) Acting on behalf of the Attorney General with respect to sections 252 and 254 of the Energy Policy and Conservation Act, 42 U.S.C. 6272, 6274, including acting on behalf of the Attorney General with respect to voluntary agreements or plans of action established pursuant to section 252 of that Act.

(h) [Reserved]

(i) Acting on behalf of the Attorney General with respect to sections 4(b), 4(c) and 4(d) of the National Cooperative Production Amendments of 1993, Pub. L. No. 103–42, 107 Stat. 117 (15 U.S.C. 4305 note).

(j) Defending the Secretary of Commerce and the Attorney General, or their delegates, in actions to set aside a determination with respect to export trade certificates of review under section 305(a) of Public Law 97–290 (15 U.S.C. 4015(a)).

(k) Acting on behalf of the Attorney General with respect to section 6 of the National Cooperative Research and

Production Act of 1984, Pub. L. 98–462, 98 Stat. 1815, as amended by the National Cooperative Production Amendments of 1993, Pub. L. No. 103–42, 107 Stat. 117 (15 U.S.C. 4305).

[Order No. 615–75, 40 FR 36118, Aug. 19, 1975, as amended by Order No. 699–77, 42 FR 15315, Mar. 21, 1977; Order No. 769–78, 43 FR 8256, Mar. 1, 1978; Order No. 960–81, 46 FR 52344, Oct. 27, 1981; Order Nos. 1002–83, 1003–83, 48 FR 9522, 9523, Mar. 7, 1983; Order No. 1077–85, 49 FR 46372, Nov. 26, 1984; Order No. 1857–94, 59 FR 14101, Mar. 25, 1994]

APPENDIX TO SUBPART H—DELEGATION OF AUTHORITY RESPECTING DENIALS OF FREEDOM OF INFORMATION AND PRIVACY ACT REQUESTS

[MEMO NO. 79–1]

1. The Deputy Assistant Attorney General for Litigation, Antitrust Division, will assume the duties and responsibilities previously assigned to the Assistant Attorney General by 28 CFR 16.5 (b) and (c) and 16.45(a), as amended July 1, 1977, and defined in those sections, for denying requests and obtaining statutory extensions of time under the Freedom of Information Act, 5 U.S.C. 552, *et seq.*, and the Privacy Act, 5 U.S.C. 552a, *et seq*.

2. The Deputy Assistant Attorney General for Litigation, Antitrust Division, who signs a denial or partial denial of a request for records made under the Freedom of Information Act or the Privacy Act shall be the ''person responsible for the denial'' within the meaning of 5 U.S.C. 552(a) and 5 U.S.C. 552a (j) and (k).

[44 FR 54045, Sept. 18, 1979]

Subpart I—Civil Division

CROSS REFERENCE: For regulations pertaining to the Civil Division, see part 15 of this chapter.

§ 0.45 General functions.

The following-described matters are assigned to, and shall be conducted, handled, or supervised by, the Assistant Attorney General, Civil Division:

(a) *Admiralty and shipping cases*—civil and admiralty litigation in any court by or against the United States, its officers and agents, which involves ships or shipping (except suits to enjoin final orders of the Federal Maritime Commission under the Shipping Act of 1916 and under the Intercoastal Shipping Act assigned to the Antitrust Division by subpart H of this part), defense of regulatory orders of the Maritime Administration affecting navigable waters or shipping thereon (except as assigned to the Land and Natural Resources Division by § 0.65(a)), workmen's compensation, and litigation and waiver of claims under reciprocal-aid maritime agreements with foreign governments.

(b) *Court of claims cases*—litigation by and against the United States in the Court of Claims, except cases assigned to the Land and Natural Resources Division and the Tax Division by subparts M and N of this part, respectively.

(c) *International trade*—all litigation before the Court of International Trade, including suits instituted pursuant to 28 U.S.C. 1581(i) and suits by the United States to recover customs duties, to recover upon a bond relating to the importation of merchandise required by the laws of the United States or by the Secretary of the Treasury and to recover a civil penalty under sections 592, 704(i)(2), or 734(i)(2) of the Tariff Act of 1930, and the presentation of appeals in the Court of International Trade.

(d) *Fraud cases*—civil claims arising from fraud on the Government (other than antitrust, land and tax frauds), including alleged claims under the False Claims Act, the Program Fraud Civil Remedies Act of 1986, the Surplus Property Act of 1944, the Anti-Kickback Act, the Contract Settlement Act of 1944, the Contract Disputes Act of 1978, 19 U.S.C. 1592 and common law fraud.

(e) *Gifts and bequests*—handling matters arising out of devises and bequests and inter vivos gifts to the United States, except determinations as to the validity of title to any lands involved and litigation pertaining to such determinations.

(f) *Patent and allied cases and other patent matters*—patent, copyright, and trademark litigation before the U.S. courts and the Patent Office, including patent and copyright infringement suits in the Court of Claims (28 U.S.C. 1498), suits for compensation under the Patent Secrecy Act where the invention was ordered to be kept secret in the interest of national defense (35 U.S.C. 183), suits for compensation for

unauthorized practice of a patented invention in the furnishing of assistance under the Foreign Assistance Act (22 U.S.C. 2356), suits for compensation for the unauthorized communication of restricted data by the Atomic Energy Commission to other nations (42 U.S.C. 2223), interference proceedings (35 U.S.C. 135, 141, 142, 146), defense of the Register of Copyrights in his administrative acts, suits for specific performance to acquire title to patents, and civil patent-fraud cases.

(g) *Tort cases*—defense of tort suits against the United States arising under the Federal Tort Claims Act and special acts of Congress; similar litigation against cost-plus Government contractors and Federal employees whose official conduct is involved (except actions against Government contractors and Federal employees which are assigned to the Land and Natural Resources Division by §0.65(a); prosecution of tort claims for damage to Government property, and actions for the recovery of medical expenses under Public Law 87–693 and part 43 of this title.

(h) *General civil matters*—litigation by and against the United States, its agencies, and officers in all courts and administrative tribunals to enforce Government rights, functions, and monetary claims (except defense of injunctive proceedings assigned to the Antitrust Division by subpart H of this part, civil proceedings seeking exclusively equitable relief assigned to the Criminal Division by §§0.55(i) and 0.61(d), and proceedings involving judgments, fines, penalties, and forfeitures assigned to other divisions by §0.171), and to defend challenged actions of Government agencies and officers, not otherwise assigned, including, but not limited to, civil penalties and forfeitures, actions in the Court of Claims under the Renegotiation Act, claims against private persons or organizations for which the Government is, or may ultimately be, liable, except as provided in §0.70(c)(2), defense of actions arising under section 2410 of title 28 of the U.S. Code whenever the United States is named as a party as the result of the existence of a Federal lien against property, defense of actions for the recovery of U.S. Government Life Insurance and National Service Life Insurance (38 U.S.C. 784), enforcement of reemployment rights in private industry pursuant to the Military Selective Service Act of 1967 (50 U.S.C., App. 459); reparations suits brought by the United States as a shipper under the Interstate Commerce Act; civil actions by the United States for penalties for violations of car service orders (49 U.S.C. 1(17a)); actions restraining violations of part II of the Interstate Commerce Act (49 U.S.C. 322(b) and 322(h); civil actions under part I of the Interstate Commerce Act (49 U.S.C. 6(10) and 16(9)); injunctions against violations of Interstate Commerce Commission orders (49 U.S.C. 16(12)); mandamus to compel the furnishing of information to the Interstate Commerce Commission (49 U.S.C. 19a(1) and 20(9)); recovery of rebates under the Elkins Act (49 U.S.C. 41(3)); compelling the appearance of witnesses before the Interstate Commerce Commission and enforcement of subpenas and punishment for contempt (49 U.S.C. 12(3)); suits to enforce final orders of the Secretary of Agriculture under the Perishable Agricultural Commodities Act (7 U.S.C. 499g), and the Packers and Stockyards Act (7 U.S.C. 216); suits to set aside orders of State regulatory agencies (49 U.S.C. 13(4)); and civil matters, except those required to be handled by the Board of Parole, under section 504(a) of the Labor-Management Reporting and Disclosure Act of 1959 (29 U.S.C. 504(a)).

(i) *Appeals under section 8(b)(1)(B) of the Contract Disputes Act of 1978*—the grant and/or legal denial of prior approval of the Attorney General as described in section 8(g)(1)(B) of the Contract Disputes Act of 1978. The Assistant Attorney General is authorized to redelegate, to the extent and subject to such limitations as may be deemed advisable, to subordinate division officials the responsibilities covered by this subsection and delineated in section 8(g)(1)(B) of the Contract Disputes Act of 1978.

(j) *Consumer litigation*—All civil and criminal litigation and grand jury proceedings arising under the Federal Food, Drug and Cosmetic Act (21 U.S.C. 301 *et seq.*), the Federal Hazardous Substances Act (15 U.S.C. 1261 *et seq.*), the Fair Packaging and Labeling Act (15

U.S.C. 1451 *et seq.*), the Automobile Information Disclosure Act (15 U.S.C. 1231 *et seq.*), the odometer requirements section and the fuel economy labeling section of the Motor Vehicle Information and Cost Savings Act (15 U.S.C. 1981 *et seq.*), the Federal Cigarette Labeling and Advertising Act (15 U.S.C. 1331 *et seq.*), the Poison Prevention Packaging Act of 1970 (15 U.S.C. 1471 *et seq.*), the Federal Caustic Poison Act (15 U.S.C. 401 note), the Consumer Credit Protection Act (15 U.S.C. 1611, 1681q and 1681r), the Wool Products Labeling Act of 1939 (15 U.S.C. 68), the Fur Products Labeling Act (15 U.S.C. 69), the Textile Fiber Products Identification Act (15 U.S.C. 70 *et seq.*), the Consumer Product Safety Act (15 U.S.C. 2051 *et seq.*), the Flammable Fabrics Act (15 U.S.C. 1191 *et seq.*), the Refrigerator Safety Device Act (15 U.S.C. 1211 *et seq.*), title I of the Magnuson-Moss Warranty—Federal Trade Commission Improvement Act (15 U.S.C. 2301 *et seq.*), the Federal Trade Commission Act (15 U.S.C. 41 *et seq.*), and section 11(1) of the Clayton Act (15 U.S.C. 21(1)) relating to violations of orders issued by the Federal Trade Commission. Upon appropriate certification by the Federal Trade Commission, the institution of criminal proceedings, under the Federal Trade Commission Act (15 U.S.C. 56(b)), the determination whether the Attorney General will commence, defend or intervene in civil proceedings under the Federal Trade Commission Act (15 U.S.C. 56(a)), and the determination under the Consumer Product Safety Act (15 U.S.C. 2076(b)(7)), whether the Attorney General will initiate, prosecute, defend or appeal an action relating to the Consumer Product Safety Commission.

(k) All civil litigation arising under the passport, visa and immigration and nationality laws and related investigations and other appropriate inquiries pursuant to all the power and authority of the Attorney General to enforce the Immigration and Nationality Act and all other laws relating to the immigration and naturalization of aliens except all civil litigation, investigations, and advice with respect to forfeitures, return of property actions, Nazi war criminals identified in 8 U.S.C. 1182(a)(33), 1251(a)(19) and civil actions seeking exclusively equitable relief which relate to national security within the jurisdiction of the Criminal Division under § 0.55 (d), (f), (i) and § 0.61(d).

(l) *Civil penalties for drug possession*—the authority and responsibilities of the Attorney General under section 6486 of the Anti-Drug Abuse Act of 1988 (21 U.S.C. 844a) and the regulations implementing that Act (28 CFR part 76). Such authority and responsibilities may be redelegated by the Assistant Attorney General to subordinate division officials to the extent and subject to limitations deemed advisable.

[Order No. 423–69, 34 FR 20388, Dec. 31, 1969, as amended by Order 445–70, 35 FR 19397, Dec. 23, 1970; Order 673–76, 41 FR 54176, Dec. 13, 1976; Order 699–77, 42 FR 15315, Mar. 21, 1977; Order 838–79, 44 FR 40498, July 11, 1979; Order 960–81, 46 FR 52345, Oct. 27, 1981; Order 1002–83, 1003–83, 48 FR 9522, 9523, Mar. 7, 1983; Order 1268–88, 53 FR 11646, Apr. 8, 1988; Order No. 1544–91, 56 FR 56578, Nov. 6, 1991]

§ 0.46 Certain civil litigation and foreign criminal proceedings.

The Assistant Attorney General in charge of the Civil Division shall, in addition to litigation coming within the scope of § 0.45, direct all other civil litigation including claims by or against the United States, its agencies or officers, in domestic or foreign courts, special proceedings, and similar civil matters not otherwise assigned, and shall employ foreign counsel to represent before foreign criminal courts, commissions or administrative agencies officials of the Department of Justice and all other law enforcement officers of the United States who are charged with violations of foreign law as a result of acts which they performed in the course and scope of their Government service.

[Order No. 441–70, 35 FR 16318, Oct. 17, 1970]

§ 0.47 Alien property matters.

The Office of Alien Property shall be a part of the Civil Division:

(a) The following described matters are assigned to, and shall be conducted, handled, or supervised by the Assistant Attorney General in charge of the Civil Division, who shall also be the Director of the Office of Alien Property:

(1) Exercising or performing all the authority, rights, privileges, powers, duties, and functions delegated to or vested in the Attorney General under the Trading with the Enemy Act, as amended, title II of the International Claims Settlement Act of 1949, as amended, the act of September 28, 1950, 64 Stat. 1079 (50 U.S.C. App. 40), the Philippine Property Act of 1946, as amended, and the Executive orders relating to such acts, including, but not limited to, vesting, supervising, controlling, administering, liquidating, selling, paying debt claims out of, returning, and settling of intercustodial disputes relating to, property subject to one or more of such acts.

(2) Conducting and directing all civil litigation with respect to the Trading with the Enemy Act, title II of the International Claims Settlement Act, the Foreign Funds Control Program and the Foreign Assets Control Program.

(3) Designating within the Office of Alien Property a certifying officer, and an alternate, to certify copies of documents issued by the Director, or his designee, which are required to be filed with the Office of the Federal Register.

(b) The Director of the Office of Alien Property shall act for and on behalf of the Attorney General.

(c) All the authority, rights, privileges, powers, duties, and functions of the Director of the Office of Alien Property may be exercised or performed by any agencies, instrumentalities, agents, delegates, or other personnel designated by him.

(d) Existing delegations by the Assistant Attorney General, Director, Office of Alien Property, or the Director, Office of Alien Property, shall continue in force and effect until modified or revoked.

(e) The Assistant Attorney General in charge of the Civil Division is authorized to administer and give effect to the provisions of the agreement entitled ''Agreement Between the United States of America and the Republic of Austria Regarding the Return of Austrian Property, Rights and Interests,'' which was concluded on January 30, 1959, and was ratified by the Senate of the United States on February 25, 1964.

§0.48 International trade litigation.

The Attorney-in-Charge, International Trade Field Office, at 26 Federal Plaza, New York, New Yorke 10007, in the Office of the Assistant Attorney General, Civil Division, is designated to accept service of notices of appeals to the Court of Customs and Patent Appeals and all other papers filed in the Court of International Trade, when the United States is an adverse party. (28 U.S.C. 2633(c); 28 U.S.C. 2601(b)).

[Order No. 960–81, 46 FR 52345, Oct. 27, 1981]

§0.49 International judicial assistance.

The Assistant Attorney General in charge of the Civil Division shall direct and supervise the following functions:

(a) The functions of the ''Central Authority'' under the Convention between the United States and other Governments on the Taking of Evidence Abroad in Civil and Commercial Matters, TIAS 7444, which entered into force on October 7, 1972.

(b) The functions of the ''Central Authority'' under the Convention between the United States and other Governments on the Service Abroad of Judicial and Extrajudicial Documents, TIAS 6638, which entered into force on February 10, 1969.

(c) To receive letters of requests issued by foreign and international judicial authorities which are referred to the Department of Justice through diplomatic or other governmental channels, and to transmit them to the appropriate courts or officers in the United States for execution.

(d) To receive and transmit through proper channels letters of request addressed by courts in the United States to foreign tribunals in connection with litigation to which the United States is a party.

[Order No. 555–73, 38 FR 32805, Nov. 28, 1973]

Subpart J—Civil Rights Division

§0.50 General functions.

The following functions are assigned to, and shall be conducted, handled, or supervised by, the Assistant Attorney General, Civil Rights Division:

(a) Enforcement of all Federal statutes affecting civil rights, including

those pertaining to elections and voting, public accommodations, public facilities, school desegregation, employment (including 42 U.S.C. 2000e–(6)), housing, abortion, sterilization, credit, and constitutional and civil rights of Indians arising under 25 U.S.C. 1301 *et seq.*, and of institutionalized persons, and authorization of litigation in such enforcement, including criminal prosecutions and civil actions and proceedings on behalf of the Government and appellate proceedings in all such cases. Notwithstanding the provisions of the foregoing sentence, the responsibility for the enforcement of the following described provisions of the U.S. Code is assigned to the Assistant Attorney General, Criminal Division:

(1) Sections 591 through 593 and sections 595 through 612 of title 18, U.S. Code, relating to elections and political activities;

(2) Sections 241, 242, and 594 of title 18, and sections 1973i and 1973j of title 42, U.S. Code, insofar as they relate to voting and election matters not involving discrimination or intimidation on grounds of race or color, and section 245(b)(1) of title 18, U.S. Code, insofar as it relates to matters not involving discrimination or intimidation on grounds of race, color, religion, or national origin;

(3) Section 245(b)(3) of title 18, U.S. Code, pertaining to forcible interference with persons engaged in business during a riot or civil disorder; and

(4) Sections 241 through 256 of title 2, U.S. Code (Federal Corrupt Practices Act).

(b) Requesting and reviewing investigations arising from reports or complaints of public officials or private citizens with respect to matters affecting civil rights.

(c) Conferring with individuals and groups who call upon the Department in connection with civil rights matters, advising such individuals and groups thereon, and initiating action appropriate thereto.

(d) Coordination within the Department of Justice of all matters affecting civil rights.

(e) Consultation with and assistance to other Federal departments and agencies and State and local agencies on matters affecting civil rights.

(f) Research on civil rights matters, and the making of recommendations to the Attorney General as to proposed policies and legislation relating thereto.

(g) Representation of Federal officials in private litigation arising under 42 U.S.C. 2000d or under other statutes pertaining to civil rights.

(h) Administration of section 5 of the Voting Rights Act of 1965, as amended (42 U.S.C. 1973c).

(i) Upon request, assisting, as appropriate, the Commission on Civil Rights or other similar Federal bodies in carrying out research and formulating recommendations.

(j) Administration of section 105 of the Civil Liberties Act of 1988 (50 U.S.C. App. 1989b).

(k) Upon request, certifications under 18 U.S.C. 245.

(l) Enforcement and administration of the Americans with Disabilities Act of 1990, Public Law 101–336.

(m) Community education, enforcement, and investigatory activities under section 102 of the Immigration Reform and Control Act of 1986, as amended.

[Order No. 423–69, 34 FR 20388, Dec. 31, 1969]

EDITORIAL NOTE: For FEDERAL REGISTER citations affecting § 0.50, see the List of Sections Affected, which appears in the Finding Aids section of the printed volume and on GPO Access.

§ 0.51 Leadership and coordination of nondiscrimination laws.

(a) The Assistant Attorney General in charge of the Civil Rights Division shall, except as reserved herein, exercise the authority vested in and perform the functions assigned to the Attorney General by Executive Order 12250 (''Leadership and Coordination of Nondiscrimination Laws''). This delegation does not include the function, vested in the Attorney General by sections 1–101 and 1–102 of the Executive order, of approving agency rules, regulations, and orders of general applicability issued under the Civil Rights Act of 1964 and section 902 of the Education Amendments of 1972. Likewise, this delegation does not include the authority to issue those regulations under section 1–303 of the Executive Order which are required, by § 0.180 of this

part, to be issued by the Attorney General.

(b) Under paragraph (a) of this section, the Assistant Attorney General in charge of the Civil Rights Division shall be responsible for coordinating the implementation and enforcement by Executive agencies of the nondiscrimination provisions of the following laws:

(1) Title VI of the Civil Rights Act of 1964 (42 U.S.C. 2000d *et seq.*).

(2) Title IX of the Education Amendments of 1972 (20 U.S.C. 1681 *et seq.*).

(3) Section 504 of the Rehabilitation Act of 1973, as amended (29 U.S.C. 794).

(4) Any other provision of Federal statutory law which provides, in whole or in part, that no person in the United States shall, on the ground of race, color, national origin, handicap, religion, or sex, be excluded from participation in, be denied the benefits of, or be subject to discrimination under any program or activity receiving Federal financial assistance.

[Order No. 944–81, 46 FR 29704, June 3, 1981]

§0.52 Certifications under 18 U.S.C. 3503.

The Assistant Attorney General in charge of the Civil Rights Division and his Deputy Assistant Attorney Generals are each authorized to exercise or perform the functions or duties conferred upon the Attorney General by section 3503 of title 18, U.S. Code, to certify that the legal proceeding, in which a motion to take testimony by deposition is made, is against a person who is believed to have participated in an organized criminal activity, where the subject matter of the case or proceeding in which the motion is sought is within the cognizance of the Civil Rights Division pursuant to §0.50.

[Order No. 452–71, 36 FR 2601, Feb. 9, 1971]

§0.53 Office of Special Counsel for Immigration Related Unfair Employment Practices.

(a) The Office of Special Counsel for Immigration Related Unfair Employment Practices shall be headed by a Special Counsel for Immigration Related Unfair Employment Practices (''Special Counsel''). The Special Counsel shall be appointed by the President for a term of four years, by and with the advice and consent of the Senate, pursuant to section 102 of the Immigration Reform and Control Act of 1986, as amended. The Office of Special Counsel shall be part of the Civil Rights Division of the Department of Justice, and the Special Counsel shall report directly to the Assistant Attorney General, Civil Rights Division.

(b) In carrying out his or her responsibilities under the Immigration Reform and Control Act of 1986, as amended, the Special Counsel is authorized to:

(1) Investigate charges of immigration-related unfair employment practices filed with the Office of Special Counsel and, when appropriate, file complaints with respect to those practices before specially designated administrative law judges within the Office of the Chief Administrative Hearing Officer, U.S. Department of Justice;

(2) Intervene in proceedings involving complaints of immigration-related unfair employment practices that are brought directly before such administrative law judges by parties other than the Special Counsel;

(3) Conduct, on his or her own initiative, investigations of immigration-related unfair employment practices and, where appropriate, file complaints with respect to those practices before such administrative law judges;

(4) Conduct, handle, and supervise litigation in U.S. District Courts for judicial enforcement of orders of administrative law judges regarding immigration-related unfair employment practices;

(5) Initiate, conduct, and oversee activities relating to the dissemination of information to employers, employees, and the general public concerning immigration-related unfair employment practices;

(6) Establish such regional offices as may be necessary;

(7) Perform such other functions as the Assistant Attorney General, Civil Rights Division shall direct; and

(8) Delegate to any of his or her subordinates any of the authority, functions, or duties vested in him or her.

[Order No. 2078–97, 62 FR 23658, May 1, 1997]

APPENDIX TO SUBPART J OF PART 0

CIVIL RIGHTS DIVISION

[MEMO 75–2]

NOTE: Civil Rights Division Memo 75–2, was superseded by Civil Rights Division, Memo 78–1 appearing at 48 FR 3367, Jan. 25, 1983.

[MEMO 78–1]

NOTE: Civil Rights Division Memo 78–1 was superseded by Civil Rights Division Memo 92–3 appearing at 57 FR 19377, May 6, 1992.

[MEMO 79–1]

DELEGATION OF AUTHORITY FOR ADMINISTRATION OF SECTION 5 OF THE VOTING RIGHTS ACT

1. The authority of the Attorney General regarding administration of section 5 of the Voting Rights Act of 1965, as amended, (42 U.S.C. 1973c) has been delegated to the Assistant Attorney General in charge of the Civil Rights Division.

2. That authority is delegated to the Chief of the Voting Section, provided that any determination to object to a change affecting voting (see 28 CFR part 51) or to withdraw such an objection shall be made by the Assistant Attorney General.

3. The Chief of the Voting Section may authorize the Deputy Chief or the Director of the section 5 unit to act on his or her behalf.

[44 FR 53080, Sept. 12, 1979]

[MEMO 92–93]

DELEGATION OF AUTHORITY TO DENY FREEDOM OF INFORMATION ACT AND PRIVACY ACT REQUESTS

1. The Chief of the Freedom of Information/Privacy Acts Branch will assume the duties and responsibilities previously assigned to the Assistant Attorney General by 28 CFR 16.4 (b) and (c) and 28 CFR 16.42(b), as amended July 1, 1991, and defined in those sections, for denying requests and obtaining extensions of time under the Freedom of Information Act, 5 U.S.C. 552 *et seq.*, and the Privacy Act, 5 U.S.C. 552a *et seq.*

2. The Chief of the Freedom of Information/Privacy Acts Branch who signs a denial or partial denial of a request for records made under the Freedom of Information Act or the Privacy Act shall be the ''person responsible for the denial'' within the meaning of 5 U.S.C. 552(a)(6)(C) and shall be responsible for denials made in accordance with 5 U.S.C. 552a (j) and (k).

3. This authority is limited to those records which are in the systems of records under the custody and control of the Civil Rights Division of the United States Department of Justice. The authority delegated herein may be redelegated by the Assistant Attorney General by internal memorandum.

[57 FR 19377, May 6, 1992]

Subpart K—Criminal Division

§ 0.55 General functions.

The following functions are assigned to and shall be conducted, handled, or supervised by, the Assistant Attorney General, Criminal Division:

(a) Prosecutions for Federal crimes not otherwise specifically assigned.

(b) Cases involving criminal frauds against the United States except cases assigned to the Antitrust Division by § 0.40(a) involving conspiracy to defraud the Federal Government by violation of the antitrust laws, and tax fraud cases assigned to the Tax Division by subpart N of this part.

(c) All criminal and civil litigation under the Controlled Substances Act, 84 Stat. 1242, and the Controlled Substances Import and Export Act, 84 Stat. 1285 (titles II and III of the Comprehensive Drug Abuse Prevention and Control Act of 1970).

(d) Civil or criminal forfeiture or civil penalty actions (including petitions for remission or mitigation of forfeitures and civil penalties, offers in compromise, and related proceedings) under the Federal Aviation Act of 1958, the Contraband Transportation Act, the Copyrights Act, the customs laws (except those assigned to the Civil Division which involve sections 592, 704(i)(2) or 734(i)(2) of the Tariff Act of 1930), the Export Control Act of 1949, the Federal Alcohol Administration Act, the Federal Seed Act, the Gold Reserve Act of 1934, the Hours of Service Act, the Animal Welfare Act, the Immigration and Nationality Act (except civil penalty actions and petitions and offers related thereto), the neutrality laws, laws relating to cigarettes, liquor, narcotics and dangerous drugs, other controlled substances, gambling, war materials, pre-Colombian artifacts, coinage, and firearms, locomotive inspection (45 U.S.C. 22, 23, 28–34), the Organized Crime Control Act of 1970, prison-made goods (18 U.S.C. 1761–1762), the Safety Appliance Act, standard barrels (15 U.S.C. 231–242), the Sugar Act of 1948, and the Twenty-Eight Hour Law.

(e) Subject to the provisions of subpart Y of this part, consideration, acceptance, or rejection of offers in compromise of criminal and tax liability under the laws relating to liquor, narcotics and dangerous drugs, gambling, and firearms, in cases in which the criminal liability remains unresolved.

(f) All criminal litigation and related investigations and inquiries pursuant to all the power and authority of the Attorney General to enforce the Immigration and Nationality Act and all other laws relating to the immigration and naturalization of aliens; all advice to the Attorney General with respect to the exercise of his parole authority under 8 U.S.C. 1182(d)(5) concerning aliens who are excludable under 8 U.S.C. 1182(a)(23), (28), (29), or (33); and all civil litigation with respect to the individuals identified in 8 U.S.C. 1182(a)(33), 1251(a)(19).

(g) Coordination of enforcement activities directed against organized crime and racketeering.

(h) Enforcement of the Act of January 2, 1951, 64 Stat. 1134, as amended by the Gambling Devices Act of 1962, 76 Stat. 1075, 15 U.S.C. 1171 *et seq.*, including registration thereunder. (See also 28 CFR 3.2)

(i) All civil proceedings seeking exclusively equitable relief against Criminal Division activities including criminal investigations, prosecutions, and other criminal justice activities (including without limitation, applications for writs of coram nobis and writs of habeas corpus not challenging exclusion, deportation, or detention under the immigration laws), except that any proceeding may be conducted, handled, or supervised by the Assistant Attorney General for National Security or another Division by agreement between the head of such Division and the Assistant Attorney General, Criminal Division.

(j) International extradition proceedings.

(k) Relation of military to civil authority with respect to criminal matters affecting both.

(l) All criminal matters arising under the Labor-Management Reporting and Disclosure Act of 1959 (73 Stat. 519).

(m) Enforcement of the following-described provisions of the United States Code—

(1) Sections 591 through 593 and sections 595 through 612 of title 18, U.S. Code, relating to elections and political activities;

(2) Sections 241, 242, and 594 of title 18, and sections 1973i and 1973j of title 42, U.S. Code, insofar as they relate to voting and election matters not involving discrimination or intimidation on grounds of race or color, and section 245(b)(1) of title 18 U.S. Code, insofar as it relates to matters not involving discrimination or intimidation on grounds of race, color, religion, or national origin;

(3) Section 245(b)(3) of title 18, U.S. Code, pertaining to forcible interference with persons engaged in business during a riot or civil disorder; and

(4) Sections 241 through 256 of title 2, U.S. Code (Federal Corrupt Practices Act). (See §0.50(a).)

(n) Civil actions arising under 39 U.S.C. 3010, 3011 (Postal Reorganization Act).

(o) Resolving questions that arise as to Federal prisoners held in custody by Federal officers or in Federal prisons, commitments of mentally defective defendants and juvenile delinquents, validity and construction of sentences, probation, and parole.

(p) Supervision of matters arising under the Escape and Rescue Act (18 U.S.C. 751, 752), the Fugitive Felon Act (18 U.S.C. 1072, 1073), and the Obstruction of Justice Statute (18 U.S.C. 1503).

(q) Supervision of matters arising under the Bail Reform Act of 1966 (28 U.S.C. 3041–3143, 3146–3152, 3568).

(r) Supervision of matters arising under the Narcotic Addict Rehabilitation Act of 1966 (18 U.S.C. 4251–4255; 28 U.S.C. 2901–2906; 42 U.S.C. 3411–3426, 3441, 3442).

(s) Civil proceedings in which the United States is the plaintiff filed under the Organized Crime Control Act of 1970, 18 U.S.C. 1963–1968.

(t) Upon request, certifications under 18 U.S.C. 245.

(u) Exercise of the authority vested in the Attorney General under 10 U.S.C. 374(b)(2)(E) to approve the use of military equipment by Department of

Defense personnel to provide transportation and base of operations support in connection with a civilian law enforcement operation.

[Order No. 423–69, 34 FR 20388, Dec. 31, 1969]

EDITORIAL NOTE: For FEDERAL REGISTER citations affecting § 0.55, see the List of Sections Affected, which appears in the Finding Aids section of the printed volume and on GPO Access.

§ 0.56 Exclusive or concurrent jurisdiction.

The Assistant Attorney General in charge of the Criminal Division is authorized to determine administratively whether the Federal Government has exclusive or concurrent jurisdiction over offenses committed upon lands acquired by the United States, and to consider problems arising therefrom.

§ 0.57 Criminal prosecutions against juveniles.

The Assistant Attorney General in charge of the Criminal Division and his Deputy Assistant Attorneys General are each authorized to exercise the power and authority vested in the Attorney General by sections 5032 and 5036 of title 18, United States Code, relating to criminal proceedings against juveniles. The Assistant Attorney General in charge of the Criminal Division is authorized to redelegate any function delegated to him under this section to United States Attorneys and to the Chief of the Section within the Criminal Division which supervises the implementation of the Juvenile Justice and Delinquency Prevention Act (18 U.S.C. 5031 *et seq.*).

[Order No. 579–74, 39 FR 37771, Oct. 24, 1974, as amended by Order No. 894–80, 45 FR 34269, May 22, 1980]

§ 0.58 Delegation respecting payment of benefits for disability or death of law enforcement officers not employed by the United States.

The Assistant Attorney General in charge of the Criminal Division and his Deputy Assistant Attorneys General are each authorized to exercise or perform any of the functions or duties conferred upon the Attorney General by the Act to Compensate Law Enforcement Officers not Employed by the United States Killed or Injured While Apprehending Persons Suspected of Committing Federal Crimes (5 U.S.C. 8191, 8192, 8193). The Assistant Attorney General in charge of the Criminal Division is authorized to redelegate any function delegated to him under this section to the Chief of the Section within the Criminal Division which supervises the implementation of the aforementioned Compensation Act.

[Order No. 1010–83, 48 FR 19023, Apr. 27, 1983]

§ 0.59 Certain certifications under 18 U.S.C. 3331 and 3503.

(a) The Assistant Attorney General in charge of the Criminal Division is authorized to exercise or perform the functions or duties conferred upon the Attorney General by section 3331 of title 18, United States Code, to certify that in his judgment a special grand jury is necessary in any judicial district of the United States because of criminal activity within such district.

(b) The Assistant Attorney General in charge of the Criminal Division and his Deputy Assistant Attorney Generals are each authorized to exercise or perform the functions or duties conferred upon the Attorney General by section 3503 of title 18, United States Code, to certify that the legal proceeding, in which a motion to take testimony by deposition is made, is against a person who is believed to have participated in an organized criminal activity, where the subject matter of the case or proceeding in which the motion is sought is within the cognizance of the Criminal Division pursuant to § 0.55, or is not within the cognizance of the Civil Rights Division.

[Order No. 452–71, 36 FR 2601, Feb. 9, 1971, as amended by Order No. 511–73, 38 FR 8152, March 29, 1973]

§§ 0.61–0.62 [Reserved]

§ 0.63 Delegation respecting admission and naturalization of certain aliens.

(a) The Assistant Attorney General in charge of the Criminal Division and the Deputy Assistant Attorney General, Criminal Division, are each authorized to exercise the power and authority vested in the Attorney General by section 7 of the Central Intelligence

Agency Act of 1949, as amended, 50 U.S.C. 403h, with respect to entry of certain aliens into the United States for permanent residence.

(b) The Assistant Attorney General in charge of the Criminal Division and the Deputy Assistant Attorneys General, Criminal Division, are each authorized to exercise the power and authority vested in the Attorney General by section 316(f) of the Immigration and Nationality Act, 8 U.S.C. 1427(f), with respect to the naturalization of certain foreign intelligence sources.

[Order No. 1556–92, 57 FR 1643, Jan. 15, 1992]

§ 0.64 [Reserved]

§ 0.64–1 Central or Competent Authority under treaties and executive agreements on mutual assistance in criminal matters.

The Assistant Attorney General, Criminal Division, in consultation with the Assistant Attorney General for National Security in matters related to the National Security Division's activities, shall have the authority and perform the functions of the ''Central Authority'' or ''Competent Authority'' (or like designation) under treaties and executive agreements between the United States of America and other countries on mutual assistance in criminal matters that designate the Attorney General or the Department of Justice as such authority. The Assistant Attorney General, Criminal Division, is authorized to re-delegate this authority to the Deputy Assistant Attorneys General, Criminal Division, and to the Director and Deputy Directors of the Office of International Affairs, Criminal Division.

[Order No. 2865–2007, 72 FR 10065, Mar. 7, 2007]

§ 0.64–2 Delegation respecting transfer of offenders to or from foreign countries.

The Assistant Attorney General, Criminal Division, in consultation with the Assistant Attorney General for National Security in matters related to the National Security Division's activities, is authorized to exercise all of the power and authority vested in the Attorney General under 18 U.S.C. 4102 that has not been delegated to the Director of the Bureau of Prisons under 28 CFR 0.96b, including specifically the authority to find appropriate or inappropriate the transfer of offenders to or from a foreign country under a treaty as referred to in Public Law 95–144. The Assistant Attorney General, Criminal Division is authorized to redelegate this authority within the Criminal Division to the Deputy Assistant Attorneys General, the Director of the Office of Enforcement Operations, and the Senior Associate Director and Associate Directors of the Office of Enforcement Operations.

[Order No. 2865–2007, 72 FR 10065, Mar. 7, 2007]

§ 0.64–3 Delegation respecting designation of certain Department of Agriculture employees (Tick Inspectors) to carry and use firearms.

The Assistant Attorney General in charge of the Criminal Division is authorized to exercise all the power and authority vested in the Attorney General under section 2274 of title 7, U.S. Code, concerning the designation of certain Department of Agriculture employees (Tick Inspectors) to carry and use firearms. This delegation includes the power and authority to issue, with the Department of Agriculture, joint rules and regulations pertaining to the carrying and use of such firearms, which would, when promulgated, supersede the existing regulations pertaining to the carrying and use of firearms by Tick Inspectors, promulgated by the Attorney General and contained in Attorney General's Order No. 1059–84. The Assistant Attorney General in charge of the Criminal Division is authorized to redelegate all of this authority under section 2274 to his Deputy Assistant Attorneys General and appropriate Office Directors and Section Chiefs.

[Order No. 1064–84, 49 FR 35934, Sept. 13, 1984]

§ 0.64–4 Delegation respecting temporary transfers, in custody, of certain prisoner-witnesses from a foreign country to the United States to testify in Federal or State criminal proceedings.

The Assistant Attorney General, Criminal Division, in consultation with the Assistant Attorney General for National Security in matters related to

the National Security Division's activities, is authorized to exercise all of the power and authority vested in the Attorney General under 18 U.S.C. 3508 that has not been delegated to the Director of the United States Marshals Service under 28 CFR 0.111a, including specifically the authority to determine whether and under what circumstances temporary transfer of a prisoner-witness to the United States is appropriate or inappropriate; to determine the point at which the witness should be returned to the transferring country; and to enter into appropriate agreements with the transferring country regarding the terms and conditions of the transfer. The Assistant Attorney General, Criminal Division is authorized to redelegate this authority within the Criminal Division to the Deputy Assistant Attorneys General and to the Director and Deputy Directors of the Office of International Affairs.

[Order No. 2865–2007, 72 FR 10066, Mar. 7, 2007]

§ 0.64–5 Policy with regard to bringing charges under the Economic Espionage Act of 1996, Pub. L. 104–294, effective October 11, 1996.

The United States may not file a charge under 18 U.S.C. 1831 of the Economic Espionage Act of 1996 (the ''EEA'') (18 U.S.C. 1831 *et seq.*), or use a violation under section 1831 of the EEA as a predicate offense under any other law, without the personal approval of the Attorney General, the Deputy Attorney General, the Assistant Attorney General for National Security, or the Assistant Attorney General, Criminal Division (or the Acting official in each of these positions if a position is filled by an Acting official). Violations of this regulation are appropriately sanctionable and will be reported by the Attorney General to the Senate and House Judiciary Committees. Responsibility for reviewing proposed charges under section 1831 of the EEA rests with the Counterespionage Section of the National Security Division, which will consult, as necessary, with the Computer Crime and Intellectual Property Section of the Criminal Division. This regulation shall remain in effect until October 11, 2011.

[Order No. 2865–2007, 72 FR 10066, Mar. 7, 2007]

APPENDIX TO SUBPART K OF PART 0

CRIMINAL DIVISION

[Directive 8–75]

EDITORIAL NOTE: Criminal Division Directive 8–75, was superseded by Criminal Division Directive 58, appearing at 44 FR 18661, Mar. 29, 1979.

[Directive 58]

DELEGATION RESPECTING DENIAL OF INFORMATION REQUESTS

The Assistant Attorney General in charge of the Criminal Division, hereby, delegates pursuant to 28 CFR 16.5(b) (as amended March 1, 1975) and 28 CFR 16.45(a), his authority under those sections to deny a request for information under 5 U.S.C. 552(a) or 5 U.S.C. 552a to the Director and Associate Director of the Office of Legal Support Services of the Criminal Division and to the Deputy Assistant Attorney General of the Criminal Division who supervises that Office. The Director, Associate Director, or Deputy Assistant Attorney General making the denial shall be the ''person responsible for the denial,'' within the meaning of 5 U.S.C. 552(a).

[Directive No. 73]

REDELEGATION OF AUTHORITY TO DEPUTY ASSISTANT ATTORNEYS GENERAL AND DIRECTOR OF THE OFFICE OF INTERNATIONAL AFFAIRS RESPECTING TRANSFER OF OFFENDERS TO AND FROM FOREIGN COUNTRIES

By virtue of the authority vested in me by § 0.64 –2 of title 28 of the Code of Federal Regulations, the authority delegated to me by that section to exercise all of the power and authority vested in the Attorney General under Section 4102 of title 18, U.S. Code, which has not been delegated to the Director of the Bureau of Prisons, including specifically the authority to find the transfer of offenders to or from a foreign country under a treaty as referred to in Public Law 95–44 appropriate or inappropriate, is hereby redelegated to each of the Deputy Assistant Attorneys General and the Director of the Office of International Affairs of the Criminal Division.

[Directive No. 81A]

REDELEGATION OF AUTHORITY TO DEPUTY ASSISTANT ATTORNEYS GENERAL AND DIRECTOR AND DEPUTY DIRECTORS OF THE OFFICE OF INTERNATIONAL AFFAIRS REGARDING AUTHORITY TO ACT AS CENTRAL AUTHORITY OR COMPETENT AUTHORITY UNDER TREATIES AND EXECUTIVE AGREEMENTS ON MUTUAL ASSISTANCE IN CRIMINAL MATTERS

By virtue of the authority vested in me by §0.64–1 of title 28 of the Code of Federal Regulations, the Authority delegated to me by that section to exercise all of the power and authority vested in the Attorney General under treaties and executive agreements on mutual assistance in criminal matters is hereby redelegated to each of the Deputy Assistant Attorneys General, to the Director of the Office of International Affairs and to each of the Deputy Directors of the Office of International Affairs, Criminal Division.

[Directive No. 81B]

REDELEGATION OF AUTHORITY TO DEPUTY ASSISTANT ATTORNEYS GENERAL AND DIRECTOR AND DEPUTY DIRECTORS OF THE OFFICE OF INTERNATIONAL AFFAIRS RESPECTING TEMPORARY TRANSFERS, IN CUSTODY, OF CERTAIN PRISONER-WITNESSES FROM A FOREIGN COUNTRY TO THE UNITED STATES .

By virtue of the authority vested in me by 28 CFR 0.64–4, the authority delegated to me by that section to exercise all of the power and authority vested in the Attorney General under section 3508 of title 18, United States Code, which has not been delegated to the Director, United States Marshals Service under 28 CFR 0.111a, is hereby redelegated to each of the Deputy Assistant Attorneys General, and to the Director and each of the Deputy Directors of the Office International Affairs, Criminal Division.

[44 FR 18661, Mar. 29, 1979, as amended at 45 FR 6541, Jan. 29, 1980; 48 FR 54595, Dec. 6, 1983; 59 FR 42161, Aug. 17, 1994; 59 FR 46550, Sept. 9, 1994]

Subpart L—Environment and Natural Resources Division

SOURCE: Order No. 423–69, 34 FR 20388, Dec. 13, 1969, unless otherwise noted. Redesignated by Order No. 2865–2007, 72 FR 10066, Mar. 7, 2007.

§0.65 General functions.

The following functions are assigned to and shall be conducted, handled, or supervised by the Assistant Attorney General in charge of the Land and Natural Resources Division:

(a) Civil suits and matters in Federal and State courts (and administrative tribunals), by or against the United States, its agencies, officers, or contractors, or in which the United States has an interest, whether for specific or monetary relief, and also nonlitigation matters, relating to:

(1) The public domain lands and the outer continental shelf of the United States.

(2) Other lands and interests in real property owned, leased, or otherwise claimed or controlled, or allegedly impaired or taken, by the United States, its agencies, officers, or contractors, including the acquisition of such lands by condemnation proceedings or otherwise,

(3) The water and air resources controlled or used by the United States, its agencies, officers, or contractors, without regard to whether the same are in or related to the lands enumerated in paragraphs (a) (1) and (2) of this section, and

(4) The other natural resources in or related to such lands, water, and air,

except that the following matters which would otherwise be included in such assignment are excluded therefrom:

(i) Suits and matters relating to the use or obstruction of navigable waters or the navigable capacity of such waters by ships or shipping thereon, the same being specifically assigned to the Civil Division;

(ii) Suits and matters involving tort claims against the United States under the Federal Tort Claims Act and special acts of Congress, the same being specifically assigned to the Civil Division;

(iii) Suits and matters involving the foreclosure of mortgages and other liens held by the United States, the same being specifically assigned to the Civil and Tax Divisions according to the nature of the lien involved;

(iv) Suits arising under 28 U.S.C. 2410 to quiet title or to foreclose a mortgage or other lien, the same being specifically assigned to the Civil and Tax Divisions according to the nature of the lien held by the United States, and all other actions arising under 28 U.S.C. 2410 involving federal tax liens held by the United States, which are

specifically assigned to the Tax Division;

(v) Matters involving the immunity of the Federal Government from State and local taxation specifically delegated to the Tax Division by § 0.71.

(b) Representation of the interests of the United States in all civil litigation in Federal and State courts, and before the Indian Claims Commission, pertaining to Indians, Indian tribes, and Indian affairs, and matters relating to restricted Indian property, real or personal, and the treaty rights of restricted Indians (except matters involving the constitutional and civil rights of Indians assigned to the Civil Rights Division by subpart J of this part).

(c) Rendering opinions as to the validity of title to all lands acquired by the United States, except as otherwise specified by statute.

(d) Civil and criminal suits and matters involving air, water, noise, and other types of pollution, the regulation of solid wastes, toxic substances, pesticides under the Federal Insecticide, Fungicide, and Rodenticide Act, and the control of the environmental impacts of surface coal mining.

(e) Civil and criminal suits and matters involving obstructions to navigation, and dredging or filling (33 U.S.C. 403).

(f) Civil and criminal suits and matters arising under the Atomic Energy Act of 1954 (42 U.S.C. 2011, *et seq.*) insofar as it relates to the prosecution of violations committed by a company in matters involving the licensing and operations of nuclear power plants.

(g) Civil and criminal suits and matters relating to the natural and biological resources of the coastal and marine environments, the outer continental shelf, the fishery conservation zone and, where permitted by law, the high seas.

(h) Performance of the Department's functions under § 706.5 of the regulations for the prevention of conflict of interests promulgated by the Secretary of the Interior under the authority of the Surface Mining Control and Reclamation Act of 1977, section 201(f), 91 Stat. 450, and contained in 30 CFR part 706.

(i) Conducting the studies of processing sites required by section 115(b) of the Uranium Mill Tailings Radiation Control Act of 1978, publishing the results of the studies and furnishing the results thereof to the Congress.

(j) Criminal suits and civil penalty and forfeiture actions relating to wildlife law enforcement under the Endangered Species Act of 1973 (16 U.S.C. 1531–1543); the Lacey Act and related provisions (18 U.S.C. 41–44, 47); the Black Bass Act (16 U.S.C. 851–856); the Airborne Hunting Act (16 U.S.C. 742j–1); the Migratory Bird Act (16 U.S.C. 701, *et seq.*); the Wild Horses and Wild Burros Act (16 U.S.C. 1331–1340); the Bald and Golden Eagle Protection Act (16 U.S.C. 668–668d); and the Fish and Wildlife Coordination Act (16 U.S.C. 661 *et seq.*).

[Order No. 423–69, 34 FR 20388, Dec. 31, 1969, as amended by Order No. 540–73, 38 FR 26910, Sept. 27, 1973; Order No. 699–77, 42 FR 15315, Mar. 21, 1977; Order No. 764–78, 43 FR 3115, Jan. 23, 1978; Order No. 809–78, 43 FR 55394, Nov. 28, 1978; Order No. 960–81, 46 FR 52346, Oct. 27, 1981; Order No. 1083–85, 50 FR 8607, Mar. 4, 1985]

§ 0.65a Litigation involving Environmental Protection Agency.

With respect to any matter assigned to the Land and natural Resources Division in which the Environmental Protection Agency is a party, the Assistant Attorney General in charge of the Land and Natural Resources Division, and such members of his staff as he may specifically designate in writing, are authorized to exercise the functions and responsibilities undertaken by the Attorney General in the Memorandum of Understanding between the Department of Justice and the Environmental Protection Agency (42 FR 48942), except that subpart Y of this part shall continue to govern as authority to compromise and close civil claims in such matters.

[Order No. 764–78, 43 FR 3115, Jan. 23, 1978]

§ 0.66 Delegation respecting title opinions.

(a) The Assistant Attorney General in charge of the Land and Natural Resources Division or such members of his staff as he may specifically designate in writing, are authorized to

sign the name of the Attorney General to opinions on the validity of titles to property acquired by or on behalf of the United States, except those which, in the opinion of the Assistant Attorney General involve questions of policy or for any other reason require the personal attention of the Attorney General.

(b) Pursuant to the provisions of section 1 of Public Law 91–393, approved September 1, 1970, 84 Stat. 835, the Assistant Attorney General in charge of the Land and Natural Resources Division is authorized:

(1) To exercise the Attorney General's power of delegating to other departments and agencies his (the Attorney General's) responsibility for approving the title to lands acquired by them,

(2) With respect to delegations so made to other departments and agencies, to exercise the Attorney General's function of general supervision regarding the carrying out by such departments and agencies of the responsibility so entrusted to them, and

(3) To promulgate regulations and any appropriate amendments thereto governing the approval of land titles by such departments and agencies.

[Order No. 440–70, 35 FR 16084, Oct. 14, 1970]

§0.67 Delegation respecting conveyances for public-airport purposes.

The Assistant Attorney General in charge of the Land and Natural Resources Division, and such members of his staff as he may specifically designate in writing, are authorized to exercise the power and authority vested in the Attorney General by section 23(b) of the Airport and Airway Development Act of 1970 (84 Stat. 219; 49 U.S.C. 1723) with respect to approving the performance of acts and execution of instruments necessary to make the conveyances requested in carrying out the purposes of that section, except those acts and instruments which, in the opinion of the Assistant Attorney General, involve questions of policy or for any other reason require the personal attention of the Attorney General.

[Order No. 468–71, 36 FR 20428, Oct. 22, 1971]

§0.68 Delegation respecting mineral leasing.

The Assistant Attorney General in charge of the Land and Natural Resources Division, and such members of his staff as he may specifically designate in writing, are authorized to execute the power and authority of the Attorney General under the provisions of section 3 of the act of August 7, 1947, 61 Stat. 914, 30 U.S.C. 352, respecting the leasing of minerals on lands under the jurisdiction of the Department of Justice.

[Order No. 542–73, 38 FR 28289, Oct. 12, 1973]

§0.69 Delegation of authority to make determinations and grants.

The Assistant Attorney General in charge of the Land and Natural Resources Division, or such members of his staff as he may specifically designate in writing, are authorized to exercise the power and authority vested in the Attorney General by Public Law 87–852, approved October 23, 1962 (40 U.S.C. 319), with respect to making the determinations and grants necessary in carrying out the purposes of that Act, except those acts and instruments which in the opinion of the Assistant Attorney General involve questions of policy or for any other reason require the personal attention of the Attorney General.

[Order No. 736–77, 42 FR 38177, July 27, 1977]

§0.69a Delegation respecting approval of conveyances.

The Assistant Attorney General in charge of the Land and Natural Resources Division, and such members of his staff as he may specifically designate in writing, are authorized to exercise the power and authority vested in the Attorney General by the Act of June 4, 1934, 48 Stat. 836, with respect to approving the making or acceptance of conveyances by the Secretary of the Interior on behalf of the United States.

[Order No. 947–81, 46 FR 29931, June 4, 1981]

§0.69b Delegation of authority respecting conveyances for public airports.

The Assistant Attorney General in charge of the Land and Natural Resources Division, and such members of

his staff as he may specifically designate in writing, are authorized to exercise the power and authority vested in the Attorney General of section 516(b) of The Airport and Airway Improvement Act of 1982 (96 Stat. 671, 692) with respect to approving the performance of acts and execution of instruments necessary to make the conveyance requested in carrying out the purposes of that section, except those acts and instruments which in the opinion of the Assistant Attorney General, involve questions of policy or for any other reason require the personal attention of the Attorney General.

[Order No. 1069–84, 49 FR 39843, Oct. 11, 1984]

§ 0.69c Litigation involving the Resource Conservation and Recovery Act.

(a) The authority to receive complaints served upon the Attorney General pursuant to section 401 of the Hazardous Waste Amendments of 1984 (Pub. L. 616, 98th Cong.; 42 U.S.C. 6872(b)(2)(F)) is hereby delegated to the Assistant Attorney General, Land and Natural Resources Division. Every plaintiff required to serve upon the Attorney General a copy of their complaint, should do so by sending a copy of the complaint, together with all attachments thereto required by the Federal Rules of Civil Procedure and the Local Rules for the Federal District Court in which the complaint if filed, via first class mail, to the Assistant Attorney General, Land and Natural Resources Division, U.S. Department of Justice, NW., Washington, DC 20530.

(b) Services pursuant to section 401 shall be deemed effective upon the date the complaint is received by the Assistant Attorney General.

[Order No. 1099–85, 50 FR 26198, June 25, 1985]

Subpart M—Tax Division

SOURCE: Order No. 423–69, 34 FR 20388, Dec. 13, 1969, unless otherwise noted. Redesignated by Order No. 2865–2007, 72 FR 10066, Mar. 7, 2007.

§ 0.70 General functions.

The following functions are assigned to and shall be conducted, handled, or supervised by, the Assistant Attorney General, Tax Division:

(a) Prosecution and defense in all courts, other than the Tax Court, of civil suits, and the handling of other matters, arising under the internal revenue laws, and litigation resulting from the taxing provisions of other Federal statutes (except civil forfeiture and civil penalty matters arising under laws relating to liquor, narcotics, gambling, and firearms assigned to the Criminal Division by § 0.55(d)).

(b) Criminal proceedings arising under the internal revenue laws, except the following: Proceedings pertaining to misconduct of Internal Revenue Service personnel, to taxes on liquor, narcotics, firearms, coin-operated gambling and amusement machines, and to wagering, forcible rescue of seized property (26 U.S.C. 7212(b)), corrupt or forcible interference with an officer or employee acting under the Internal Revenue laws (26 U.S.C. 7212(a)), unauthorized disclosure of information (26 U.S.C. 7213), and counterfeiting, mutilation, removal, or reuse of stamps (26 U.S.C. 7208).

(c)(1) Enforcement of tax liens, and mandamus, injunctions, and other special actions or general matters arising in connection with internal revenue matters.

(2) Defense of actions arising under section 2410 of title 28 of the U.S. Code whenever the United States is named as a party to an action as the result of the existence of a Federal tax lien, including the defense of other actions arising under section 2410, if any, involving the same property whenever a tax-lien action is pending under that section.

(d) Appellate proceedings in connection with civil and criminal cases enumerated in paragraphs (a) through (c) of this section and in § 0.71, including petitions to review decisions of the Tax Court of the United States.

[Order No. 423–69, 34 FR 20388, Dec. 31, 1969, as amended by Order No. 445–70, 35 FR 19397, Dec. 23, 1970; Order No. 699–77, 42 FR 15315, Mar. 21, 1977; Order No. 960–81, 46 FR 52346, Oct. 27, 1981]

§0.71 Delegation respecting immunity matters.

The Assistant Attorney General in charge of the Tax Division is authorized to handle matters involving the immunity of the Federal Government from State or local taxation (except actions to set aside ad valorem taxes, assessments, special assessments, and tax sales of Federal real property, and matters involving payments in lieu of taxes), as well as State or local taxation involving contractors performing contracts for or on behalf of the United States.

Subpart N—National Security Division

SOURCE: Order No. 2865–2007, 72 FR 10066, Mar. 7, 2007, unless otherwise noted.

§0.72 National Security Division.

The following functions are assigned to and shall be conducted, handled, or supervised by the Assistant Attorney General for National Security:

(a) *General functions.* (1) Advise the Attorney General, the Office of Management and Budget, and the White House, and brief Congress, as appropriate, on matters relating to the national security activities of the United States, and ensure that all of the Department's national security activities are effectively coordinated;

(2) Develop, enforce, and supervise the application of all federal criminal laws related to the national counterterrorism and counterespionage enforcement programs, except those specifically assigned to other Divisions;

(3) Represent the Department on interdepartmental boards, committees, and other groups dealing with national security, intelligence, or counterintelligence matters;

(4) Oversee the development, coordination, and implementation of Department policy, in conjunction with other components of the Department as appropriate, with regard to intelligence, counterintelligence, or national security matters;

(5) Provide legal assistance and advice, in coordination with the Office of Legal Counsel as appropriate, to Government agencies on matters of national security law and policy;

(6) Administer the Foreign Intelligence Surveillance Act;

(7) Prosecute Federal crimes involving national security, foreign relations, and terrorism, and coordinate the Department's activities and advice on all issues with respect to the Foreign Intelligence Surveillance Act of 1978, as amended, and the Classified Information Procedures Act arising in connection with any such prosecutions;

(8) Prosecute and coordinate prosecutions and investigations targeting individuals and organizations involved in terrorist acts at home or against U.S. persons or interests abroad, or that assist in the financing of or providing support to those acts;

(9) Except in the case of emergencies where there is an immediate threat to life or property, review for concurrence the Department's use of criminal proceedings in connection with all matters relating to intelligence, counterintelligence, or counterterrorism. Such criminal proceedings include, but are not limited to, grand jury proceedings, the filing of search and arrest warrants or applications for electronic surveillance pursuant to 18 U.S.C. 2510 *et seq.* and 18 U.S.C. 2701 *et seq.*, the filing of complaints, the return of indictments, criminal forfeiture proceedings, and appeals;

(10) Evaluate Departmental activities and existing and proposed domestic and foreign intelligence, counterintelligence, or national security activities to determine their consistency with United States national security policies and law;

(11) Formulate policy alternatives and recommend action by the Department and other executive agencies in achieving lawful United States intelligence, counterintelligence, or national security objectives;

(12) Analyze and interpret current statutes, executive orders, guidelines, and other directives pertaining to intelligence, counterintelligence, or national security matters;

(13) Formulate legislative initiatives, policies, and guidelines relating to intelligence, counterintelligence, or national security matters;

(14) Review and comment upon proposed statutes, guidelines, and other directives with regard to national security matters, and, in conjunction with the Office of Legal Counsel, review and comment upon the form and legality of proposed executive orders that touch upon matters related to the function of this Division;

(15) Provide training for Departmental components on legal topics related to intelligence, counterintelligence, or national security matters;

(16) Advise, assist, coordinate with, and train those in the law enforcement community, including federal, state, and local prosecutors, investigative agencies, and foreign criminal justice entities (provided that any training of foreign criminal justice entities should be conducted in coordination with the Criminal Division);

(17) Provide oversight of intelligence, counterintelligence, or national security matters by executive branch agencies to ensure conformity with applicable law, executive branch regulations, and Departmental objectives and report to the Attorney General on such activities;

(18) Supervise the preparation of the National Security Division's submission for the annual budget;

(19) Serve as primary liaison to the Director of National Intelligence for the Department of Justice;

(20) Represent the Department on the Committee on Foreign Investments in the United States; and

(21) Perform other duties pertaining to intelligence, counterintelligence, counterterrorism, or national security matters as may be assigned by the Attorney General or the Deputy Attorney General.

(b) *Functions related to intelligence policy and operations.* (1) Advise and assist the Attorney General in carrying out his responsibilities under Executive Order 12333, ''United States Intelligence Activities,'' and other statutes, executive orders, and authorities related to intelligence, counterintelligence, or national security matters;

(2) Supervise the preparation of certifications and applications for orders under the Foreign Intelligence Surveillance Act of 1978, as amended, and the representation of the United States before the United States Foreign Intelligence Surveillance Court and the United States Foreign Intelligence Court of Review;

(3) Participate in the development, implementation, and review of United States intelligence, counterintelligence, and national security policies, including procedures for the conduct of intelligence, counterintelligence, or national security activities;

(4) Supervise sensitive areas of law enforcement related to the activities of the National Security Division, except for tasks assigned to other Divisions; and

(5) Recommend action by the Department of Justice with regard to applications under the Foreign Intelligence Surveillance Act of 1978, as amended, as well as with regard to other investigative activities by executive branch agencies; and

(6) To the extent deemed appropriate by the Assistant Attorney General for National Security, prepare periodic and special intelligence reports describing and evaluating domestic and foreign intelligence and counterintelligence activities and assessing trends or changes in these activities.

(c) *Functions related to counterterrorism.* (1) Participate in the systematic collection and analysis of data and information relating to the investigation and prosecution of terrorism cases;

(2) Coordinate with Government departments and agencies to facilitate prevention of terrorist activity through daily detection and analysis and to provide information and support to the Offices of the United States Attorneys;

(3) Prosecute matters involving counterterrorism;

(4) Prosecute terrorist financing matters, including material support cases, through the Division's counterterrorism programs;

(5) Formulate legislative initiatives, policies, and guidelines relating to terrorism;

(6) Prosecute matters involving torture, genocide, and war crimes to the extent such matters involve the activities of the National Security Division;

(7) Assist in the foreign terrorist organization designation process with

the Department of State, the Department of the Treasury, and the components of the Department of Justice; and

(8) Provide legal advice to attorneys for the Government concerning federal national security statutes, including but not limited to: aircraft piracy and related offenses (49 U.S.C. 46501–07); aircraft sabotage (18 U.S.C. 32); crimes against internationally protected persons (18 U.S.C. 112, 878, 1116, 1201(a)(4)); sea piracy (18 U.S.C. 1651); hostage taking (18 U.S.C. 1203); terrorist acts abroad, including murder, against United States nationals (18 U.S.C. 2332); acts of terrorism transcending national boundaries (18 U.S.C. 2332b); conspiracy within the United States to murder, kidnap, or maim persons or to damage property overseas (18 U.S.C. 956); providing material support to terrorists and terrorist organizations (18 U.S.C. 2339A, 2339B, 2339C); and using biological, nuclear, chemical or other weapons of mass destruction (18 U.S.C. 175, 831, 2332c, 2332a).

(d) *Functions related to internal security.* (1) Enforcement of all criminal laws relating to subversive activities and kindred offenses directed against the internal security of the United States, including the laws relating to treason, sabotage, espionage, and sedition; enforcement of the Foreign Assets Control Regulations issued under the Trading With the Enemy Act (31 CFR 500.101 *et seq.*); criminal prosecutions under the Atomic Energy Act of 1954, the Smith Act, the neutrality laws, the Arms Export Control Act, the Federal Aviation Act of 1958 (49 U.S.C. 1523) relating to offenses involving the security control of air traffic, and 18 U.S.C. 799 and criminal prosecutions for offenses, such as perjury and false statements, arising out of offenses relating to national security;

(2) Administration and enforcement of the Foreign Agents Registration Act of 1938, as amended; the Act of August 1, 1956, 70 Stat. 899 (50 U.S.C. 851–857), including the determination in writing that the registration of any person coming within the purview of that Act would not be in the interest of national security; and the Voorhis Act (18 U.S.C. 2386);

(3) Administration and enforcement of the Internal Security Act of 1950, as amended;

(4) Conduct of civil proceedings seeking exclusively equitable relief against laws, investigations or administrative actions designed to protect the national security (including without limitation personnel security programs and the foreign assets control program);

(5) Interpretation of Executive Order 10450 of April 27, 1953, as amended, and advising other departments and agencies in connection with the administration of the federal employees security program, including the designation of organizations as required by the order; the interpretation of Executive Order 10501 of November 5, 1953, as amended, and of regulations issued thereunder in accordance with section 11 of that order; and the interpretation of Executive Order 10865 of February 20, 1960;

(6) Conduct of libels and civil penalty actions (including petitions for remission or mitigation of civil penalties and forfeitures, offers in compromise and related proceedings) arising out of violations of the Trading with the Enemy Act, the neutrality statutes, and the Arms Export Control Act;

(7) Enforcement and administration of the provisions of 2 U.S.C. 441e, relating to contributions by foreign nationals;

(8) Enforcement and administration of the provisions of 18 U.S.C. 219, relating to officers and employees of the United States acting as agents of foreign principals; and

(9) Enforcement and administration of criminal matters arising under the Military Selective Service Act of 1967.

(e) *Relationship to other offices.* Nothing in this subpart shall be construed as affecting the functions or overriding the authority of the Office of Legal Counsel as established by 28 CFR 0.25.

Subpart O—Justice Management Division

§0.75 Policy functions.

The Assistant Attorney General for Administration shall head the Justice Management Division and shall provide advice relating to basic Department

policy for budget and financial management, program evaluation, auditing, personnel management and training, procurement, information processing and telecommunications, security and for all matters pertaining to organization, management, and administration. The following matters are assigned to, and shall be conducted, handled, or supervised by, the Assistant Attorney General for Administration:

(a) Conduct, direct, review, and evaluate management studies and surveys of the Department's organizational structure, functions, and programs, operating procedures and supporting systems, and management practices throughout the Department; and make recommendations to reduce costs and increase productivity.

(b) Supervise, direct, and review the preparation, justification and execution of the Department of Justice budget, including the coordination and control of the programming and reprogramming of funds.

(c) Review, analyze, and coordinate the Department's programs and activities to ensure that the Department's use of resources and estimates of future requirements are consistent with the policies, plans, and mission priorities of the Attorney General.

(d) Plan, direct, and coordinate Department-wide personnel management programs, and develop and issue Department-wide policy in all personnel program areas, including training, position classification and pay administration, staffing, employee performance evaluation, employee development, employee relations and services, employee recognition and incentives, equal employment opportunity programs, including the equal opportunity recruitment program (5 U.S.C. 7201), personnel program evaluation, labor management relations, adverse action hearings and appeals, employee grievances, and employee health programs.

(e) Develop and direct Department-wide financial management policies, programs, procedures, and systems including financial accounting, planning, analysis, and reporting.

(f) Supervise and direct the operation of the Department's central payroll system, automated information services, publication services, library services and any other Department-wide central services which are established by or assigned to the Justice Management Division.

(g) Formulate and administer the General Administration Appropriation of the Department's budget.

(h) Formulate Department-wide audit policies, standards and procedures; develop, direct and supervise independent and comprehensive internal audits, including examinations authorized by 28 U.S.C. 526, of all organizations, programs, and functions of the Department, and audits of expenditures made under the Department's contracts and grants to ensure compliance with laws, regulations and generally accepted accounting principles; economy and efficiency in operation; and that desired results are being achieved.

(i) Develop and direct a Department-wide directives management program and administer the directives management system.

(j) Plan, direct, administer, and monitor compliance with Department-wide policies, procedures, and regulations concerning records, reports, procurement, printing, graphics, audiovisual activities (including the approval or disapproval of production and equipment requests), forms management, supply management, motor vehicles, real and personal property, space assignment and utilization, and all other administrative services functions.

(k) Formulate Department policies, standards, and procedures for information systems and the management and use of automatic data processing equipment; review the use and performance of information systems with respect to Department objectives, plans, policies, and procedures; provide technical leadership and support to new Department-wide information systems; review and approve all contracts for information processing let by the Department, and provide the final review and approval of systems and procedures and standards for use of data elements and codes.

(l) Formulate policies, standards, and procedures for Department telecommunications systems and equipment and review their implementation.

(m) Provide computer and digital telecommunications services on an equitable resource-sharing basis to all organizational units within the Department.

(n) Formulate Department policies for the use of consultants and non-personal service contracts, review, and approve all nonpersonal service contracts, and review the implementation of Department policies.

(o) Serve as liaison with state and local governments on management affairs, and coordinate the Department's participation in Federal regional interagency bodies.

(p) Direct all Department security programs including personnel, physical, document, information processing and telecommunications, special intelligence, and employee health and safety programs and formulate and implement Department defense mobilization and contingency planning.

(q) Review legislation for potential impact on the Department's resources.

(r) Develop and implement a legal information coordination system for the use of the Department of Justice and, as appropriate, the Federal Government as a whole.

[Order No. 543–73, 38 FR 29585, Oct. 26, 1973, as amended by Order No. 565–74, 39 FR 15875, May 6, 1974; Order No. 699–77, 42 FR 15315, Mar. 21, 1977; Order No. 722–77, 42 FR 25499, May 18, 1977; Order No. 960–81, 46 FR 52346, Oct. 27, 1981]

§0.76 Specific functions.

The functions delegated to the Assistant Attorney General for Administration by this subpart O shall also include the following specific policy functions:

(a) Directing the Department's financial management operations, including control of the accounting for appropriations and expenditures, employment limitations, voucher examination and audit, overtime pay, establishing per diem rates, promulgation of policies for travel, transportation, and relocation expenses, and issuance of necessary regulations pertaining thereto.

(b) Submission of requests to the Office of Management and Budget for apportionment or reapportionment of appropriations, including the determination, whenever required, that such apportionment or reapportionment indicates the necessity for the submission of a request for a deficiency or supplemental estimate, and to make allotments to organizational units of the Department of funds made available to the Department within the limits of such apportionments or reapportionments (31 U.S.C. 665).

(c) Approving per diem allowances for travel by airplane, train or boat outside the continental United States in accordance with paragraph 1–7.2 of the Federal Travel Regulations (FPMR 101–7).

(d) Exercising the claims settlement authority under the Federal Claims Collection Act of 1966 (31 U.S.C. 952).

(e) Authorizing payment of actual expense of subsistence (5 U.S.C. 5702(c)).

(f) Prescribing regulations providing for premium pay pursuant to 5 U.S.C. 5541–5550a.

(g) Settling and authorizing payment of employee claims under the Military and Civilian Employees' Claims Act of 1964, as amended (31 U.S.C. 240–243).

(h) Submitting requests to the Comptroller General for decisions (31 U.S.C. 74, 82d) and deciding questions involving the payment of $25 or less (Comp. Gen. B–161457, July 14, 1976).

(i) Making determinations with respect to employment and wages under section 3122 of the Federal Insurance Contributions Act (26 U.S.C. 3122).

(j) Excluding the Office of Justice Assistance, Research and Statistics, supervising and directing the Department's procurement and contracting functions and assuring that equal employment opportunity is practiced by the Department's contractors and subcontractors and in federally assisted programs under the Department's control.

(k) Designating Contracts Compliance Officers pursuant to Executive Order 11246, as amended.

(l) Making the certificate required with respect to the necessity for including illustrations in printing (44 U.S.C. 1104).

(m) Making the certificates with respect to the necessity of long distance telephone calls (31 U.S.C. 680a).

(n) Making certificates of need for space (68 Stat. 518, 519).

(o) Exercising, except for the authority conferred in §§ 0.15(b)(1), 0.19(a)(1), 0.137, and 0.138 of this part, the power and authority vested in the Attorney General to take final action on matters pertaining to the employment, separation, and general administration of personnel in General Schedule grade GS–1 through GS–15, and in wage board positions; classify positions in the Department under the General Schedule and wage board systems regardless of grade; postaudit and correct any personnel action within the Department; and inspect at any time any personnel operations of the various organizational units of the Department.

(p) Selecting and assigning employees for training by, in, or through non-Government facilities, paying the expenses of such training or reimbursing employees therefor, and preparing and submitting the required annual report to the Office of Personnel Management (5 U.S.C. 4103–4118).

(q) Exercising authority for the temporary employment of experts or consultants of organizations thereof, including stenographic reporting services (5 U.S.C. 3109(b)).

(r) Providing assistance in furnishing information to the public under the Public Information Section of the Administrative Procedure Act (5 U.S.C. 552).

(s) Representing the Department in its contacts on matters relating to administration and management with the Congressional Appropriations Committees, Office of Management and Budget, the General Accounting Office, the Office of Personnel Management, the General Services Administration, the Joint Committee on Printing, the Government Printing Office and all other Federal departments and agencies.

(t) Taking final action, including making all required determinations and findings, in connection with the acquisition of real property for use by the Department of Justice.

(u) Perform functions with respect to the operation, maintenance, repair, preservation, alteration, furnishing, equipment and custody of buildings occupied by the Department of Justice as delegated by the Administrator of the General Services Administration.

(v) Implementing Office of Management and Budget Circular No. A–76, ''Performance of Commercial Activities''.

[Order No. 543–73, 38 FR 29585, Oct. 26, 1973]

EDITORIAL NOTE: For FEDERAL REGISTER citations affecting § 0.76, see the List of CFR Sections Affected, which appears in the Finding Aids section of the printed volume and on GPO Access.

§ 0.77 Operational functions.

The Assistant Attorney General for Administration shall provide all direct administrative support services to the Offices, Boards and Divisions of the Department and to the U.S. Marshals Service, except where independent administrative authority has been conferred. These services shall include the following:

(a) Planning, directing and coordinating the personnel management program; providing personnel services including employment and staffing, employee relations, and classification, and including the employment, separation and general administration of employees, except attorneys, in General Schedule grades GS–15 and below, or equivalent pay levels.

(b) Formulating policies and plans for efficient administrative management and organization and developing and coordinating all management studies and reports on the operations of the Offices, Divisions and Boards.

(c) Planning, justifying, and compiling the annual and supplemental budget estimates of the Offices, Divisions and Boards.

(d) Planning, directing and executing accounting operations for the Offices, Divisions and Boards.

(e) Providing information systems analysis, design, computer programming, and systems implementation services consistent with Departmental information systems plans, policies and procedures.

(f) Implementing and administering management programs for the creation, organization, maintenance, use, and disposition of Federal records, and providing mail and messenger service.

(g) Implementing and administering programs for procurement, personal property, supply, motor vehicle, space

management, and operations and management of buildings as delegated by the Administrator of the General Services Administration.

(h) Operating and maintaining the Department Library.

(i) Routing and controlling correspondence, maintaining indices of legal cases and matters, replying to correspondence not assignable to a division, safeguarding confidential information, attesting to the correctness of records, and related matters.

(j) Accepting service of summonses, complaints, or other papers, including, without limitation, subpoenas, directed to the Attorney General in his official capacity, as a representative of the Attorney General, under the Federal Rules of Civil and Criminal Procedure or in any suit within the purview of subsection (a) of section 208 of the Department of Justice Appropriation Act, 1953 (66 Stat. 560 (43 U.S.C. 666(a))).

(k) Making the certificates required in connection with the payment of expenses of collecting evidence: *Provided*, That each such certificate shall be approved by the Attorney General.

(l) Taking final action, including making all required determinations and findings, in connection with negotiated purchases and contracts as provided in 41 U.S.C. 252(c) (1) through (11), (14), (15) except that the authority provided in 41 U.S.C. 252(c)(11) shall be limited not to exceed an expenditure of $25,000 per contract and shall not be further delegated.

(m) Serving as Contracting Officer for the Offices, Boards and Divisions, with authority of redelegation to the Deputy Assistant Attorney General, Office of Personnel and Administration, Justice Management Division. The authority so delegated includes the authority of redelegation to subordinates and to officials within the Offices, Boards and Divisions.

(n) Authorizing payment of extraordinary expenses incurred by ministerial officers of the United States in executing acts of Congress (28 U.S.C. 1929).

(o) Representing the Attorney General with the Secretary of State in arranging for reimbursement by foreign governments of expenses incurred in extradition cases, and certifying to the Secretary the amounts to be paid to the United States as reimbursement (18 U.S.C. 3195).

[Order No. 565–74, 39 FR 15876, May 6, 1974, as amended by Order No. 699–77, 42 FR 15315, Mar. 21, 1977; Order No. 722–77, 42 FR 25499, May 18, 1977; Order No. 960–81, 46 FR 52347, Oct. 27, 1981; Order No. 996–83, 48 FR 7171, Feb. 18, 1983; Order No. 1001–83, 48 FR 9524, Mar. 7, 1983; Order No. 1977-95, 60 FR 36711, July 18, 1995]

§0.78 Implementation of financial disclosure requirements.

The Assistant Attorney General for Administration shall serve as the designated agency ethics official under title II of the Ethics in Government Act of 1978, 92 Stat. 1836, for purposes of administering the public and confidential financial disclosure programs applicable to officers and employees of the Department of Justice. His duties shall include the following:

(a) Providing necessary report forms and other information to officers and employees of the Department;

(b) Developing and maintaining a list of positions covered by the public and confidential financial reporting requirements;

(c) Monitoring compliance by department officers and employees with applicable requirements for filing and review of financial disclosure reports;

(d) Providing for retention of reports and transmittal, where necessary, of copies of reports to the Director of the Office of Government Ethics;

(e) Establishing procedures for public access to reports filed under title II of the Ethics in Government Act of 1978;

(f) Performing such other functions as may be necessary for the effective implementation of title II of the Ethics in Government Act.

[Order No. 832–79, 44 FR 29891, May 23, 1979, as amended by Order No. 960–81, 46 FR 52347, Oct. 27, 1981]

§0.79 Redelegation of authority.

The Assistant Attorney General for Administration is authorized to redelegate to any Department official any of the power or authority vested in him by this subpart O. Existing redelegations by the Assistant Attorney General for Administration shall continue

in force and effect until modified or revoked.

[Order No. 543–73, 38 FR 29585, Oct. 26, 1973. Redesignated by Order No. 565–74, 39 FR 15876, May 6, 1974, and further redesignated by Order No. 832–79, 44 FR 29891, May 23, 1979]

Subpart P—Federal Bureau of Investigation

CROSS REFERENCE: For regulations pertaining to the Federal Bureau of Investigation, see part 3 of this chapter.

§ 0.85 General functions.

The Director of the Federal Bureau of Investigation shall:

(a) Investigate violations of the laws, including the criminal drug laws, of the United States and collect evidence in cases in which the United States is or may be a party in interest, except in cases in which such responsibility is by statute or otherwise exclusively assigned to another investigative agency. The Director's authority to investigate violations of and collect evidence in cases involving the criminal drug laws of the United States is concurrent with such authority of the Administrator of the Drug Enforcement Administration under § 0.100 of this part. In investigating violations of such laws and in collecting evidence in such cases, the Director may exercise so much of the authority vested in the Attorney General by sections 1 and 2 of Reorganization Plan No. 1 of 1968, section 1 of Reorganization Plan No. 2 of 1973 and the Comprehensive Drug Abuse Prevention and Control Act of 1970, as amended, as he determines is necessary. He may also release FBI information on the same terms and for the same purposes that the Administrator of the Drug Enforcement Administration may disclose DEA information under § 0.103 of this part. The Director and his authorized delegates may seize, forfeit and remit or mitigate the forfeiture of property in accordance with 21 U.S.C. 881, 21 CFR 1316.71 through 1316.81, and 28 CFR 9.1 through 9.7.

(b) Conduct the acquisition, collection, exchange, classification and preservation of fingerprints and identification records from criminal justice and other governmental agencies, including fingerprints voluntarily submitted by individuals for personal identification purposes; provide expert testimony in Federal, State and local courts as to fingerprint examinations; and provide fingerprint training and provide identification assistance in disasters and for other humanitarian purposes.

(c) Conduct personnel investigations requisite to the work of the Department of Justice and whenever required by statute or otherwise.

(d) Carry out the Presidential directive of September 6, 1939, as reaffirmed by Presidential directives of January 8, 1943, July 24, 1950, and December 15, 1953, designating the Federal Bureau of Investigation to take charge of investigative work in matters relating to espionage, sabotage, subversive activities, and related matters, including investigating any potential violations of the Arms Export Control Act, the Export Administration Act, the Trading with the Enemy Act, or the International Emergency Economic Powers Act, relating to any foreign counterintelligence matter.

(e) Establish and conduct law enforcement training programs to provide training for State and local law enforcement personnel; operate the Federal Bureau of Investigation National Academy; develop new approaches, techniques, systems, equipment, and devices to improve and strengthen law enforcement and assist in conducting State and local training programs, pursuant to section 404 of the Omnibus Crime Control and Safe Streets Act of 1968, 82 Stat. 204.

(f) Operate a central clearinghouse for police statistics under the Uniform Crime Reporting Program, and a computerized nationwide index of law enforcement information under the National Crime Information Center.

(g) Operate the Federal Bureau of Investigation Laboratory to serve not only the Federal Bureau of Investigation, but also to provide, without cost, technical and scientific assistance, including expert testimony in Federal or local courts, for all duly constituted law enforcement agencies, other organizational units of the Department of Justice, and other Federal agencies, which may desire to avail themselves

of the service. As provided for in procedures agreed upon between the Secretary of State and the Attorney General, the services of the Federal Bureau of Investigation Laboratory may also be made available to foreign law enforcement agencies and courts.

(h) Make recommendations to the Office of Personnel Management in connection with applications for retirement under 5 U.S.C. 8336(c).

(i) Investigate alleged fraudulent conduct in connection with operations of the Department of Housing and Urban Development and other alleged violations of the criminal provisions of the National Housing Act, including 18 U.S.C. 1010.

(j) Exercise the power and authority vested in the Attorney General to approve and conduct the exchanges of identification records enumerated at §50.12(a) of this chapter.

(k) Payment of awards (including those over $10,000) under 28 U.S.C. 524(c)(2), and purchase of evidence (including the authority to pay more than $100,000) under 28 U.S.C. 524(c)(1)(F).

(l) Exercise Lead Agency responsibility in investigating all crimes for which it has primary or concurrent jurisdiction and which involve terrorist activities or acts in preparation of terrorist activities within the statutory jurisdiction of the United States. Within the United States, this would include the collection, coordination, analysis, management and dissemination of intelligence and criminal information as appropriate. If another Federal agency identifies an individual who is engaged in terrorist activities or in acts in preparation of terrorist activities, that agency is requested to promptly notify the FBI. Terrorism includes the unlawful use of force and violence against persons or property to intimidate or coerce a government, the civilian population, or any segment thereof, in furtherance of political or social objectives.

(m) Carry out the Department's responsibilities under the Hate Crime Statistics Act.

(n) Exercise the authority vested in the Attorney General under section 528(a), Public Law 101–509, to accept from federal departments and agencies the services of law enforcement personnel to assist the Department of Justice in the investigation and prosecution of fraud or other criminal or unlawful activity in or against any federally insured financial institution or the Resolution Trust Corporation, and to coordinate the activities of such law enforcement personnel in the conduct of such investigations and prosecutions.

(o) Carry out the responsibilities conferred upon the Attorney General under the Communications Assistance for Law Enforcement Act, Title I of Pub. L. 103–414 (108 Stat. 4279), subject to the general supervision and direction of the Attorney General.

[Order No. 423–69, 34 FR 20388, Dec. 31, 1969]

EDITORIAL NOTE: For FEDERAL REGISTER citations affecting §0.85, see the List of Sections Affected, which appears in the Finding Aids section of the printed volume and on GPO Access.

§0.85a Criminal justice policy coordination.

The Federal Bureau of Investigation shall report to the Attorney General on all its activities.

[Order No. 960–81, 46 FR 52347, Oct. 27, 1981]

§0.86 Seizure of gambling devices.

The Director, Associate Director, Assistants to the Director, Executive Assistant Directors, Assistant Directors, inspectors and agents of the Federal Bureau of Investigation are authorized to exercise the power and authority vested in the Attorney General to make seizures of gambling devices (18 U.S.C. 1955(d), 15 U.S.C. 1171 *et seq.*) and wire or oral communication intercepting devices (18 U.S.C. 2513).

[Order No. 960–81, 46 FR 52347, Oct. 27, 1981]

§0.87 Representation on committee for visit-exchange.

The Director of the Federal Bureau of Investigation shall be a member of the committee which represents the Department of Justice in the development and implementation of plans for exchanging visits between the Iron Curtain countries and the United States and shall have authority to designate an alternate to serve on such committee.

§ 0.88 Certificates for expenses of unforeseen emergencies.

The Director of the Federal Bureau of Investigation is authorized to exercise the power and authority vested in the Attorney General by 28 U.S.C. 537, to make certificates with respect to expenses of unforeseen emergencies of a confidential character: *Provided*, That each such certificate made by the Director of the Federal Bureau of Investigation shall be approved by the Attorney General.

§ 0.89 Authority to seize arms and munitions of war.

The Director of the Federal Bureau of Investigation is authorized to exercise the authority conferred upon the Attorney General by section 1 of E.O. 10863 of February 18, 1960 (25 FR 1507), relating to the seizure of arms and munitions of war, and other articles, pursuant to section 1 of title VI of the act of June 15, 1917, 40 Stat. 223, as amended by section 1 of the Act of August 13, 1953, 67 Stat. 577 (22 U.S.C. 401).

§ 0.89a Delegations respecting claims against the FBI.

(a) The Director of the Federal Bureau of Investigation is authorized to exercise the power and authority vested in the Attorney General Under 28 U.S.C. 2672 to consider, ascertain, adjust, determine, and settle any claim thereunder not exceeding $50,000 in any one case caused by the negligent or wrongful act or omission of any employee of the Federal Bureau of Investigation.

(b) The Director of the Federal Bureau of Investigation is further authorized to exercise the power and authority vested in the Attorney General under the Act of December 7, 1989, Public Law 101–203, 103 Stat. 1805 (31 U.S.C. 3724) with regard to claims thereunder not exceeding $50,000 in any one case.

(c) The Director of the Federal Bureau of Investigation is authorized to redelegate to the General Counsel of the FBI or his designee within the Office of the General Counsel or to the primary legal advisors of the FBI field offices, any of the authority, functions, or duties vested in him by paragraphs (a) and (b) of this section. This authority shall not be further redelegated.

[Order No. 884–80, 45 FR 22023, Apr. 3, 1980, as amended by Order No. 1417–90, 55 FR 27808, July 6, 1990; Order No. 1551–91, 56 FR 64192, Dec. 9, 1991; Order No. 1904–94, 59 FR 41242, Aug. 11, 1994; Order No. 2314–2000, 65 FR 44683, July 19, 2000]

Subpart P–1—Office of Justice Programs and Related Agencies

SOURCE: Order No. 1111–85, 50 FR 43385, Oct. 25, 1985, unless otherwise noted.

§ 0.90 Office of Justice Programs.

The Office of Justice Programs is headed by an Assistant Attorney General appointed by the President. Under the general authority of the Attorney General, the Assistant Attorney General maintains liaison with the provides information to Federal, State, local, and private agencies and organizations on criminal justice matters, and provides staff support to and coordinates the activities of the National Institute of Justice, the Bureau of Justice Statistics, the Office of Juvenile Justice and Delinquency Prevention, and the Bureau of Justice Assistance. The Office includes the Office for Victims of Crime.

§ 0.91 Office for Victims of Crime.

The Office for Victims of Crime is headed by a Director appointed by the Assistant Attorney General, Office of Justice Programs. Under a delegation by the Attorney General (DOJ Order No. 1079–84, Dec. 14, 1984), the Assistant Attorney General and the Director are responsible for providing national leadership to encourage improved treatment of victims by implementing the recommendations of the President's Task Force on Victims of Crime and the Attorney General's Task Force on Family Violence, and by administering the Crime Victims Fund and the Federal Crime Victim Assistance Program, established under the Victims of Crime Act of 1984, title II, chapter XIV, of Public Law 98–473, 42 U.S.C. 10601 *et seq.*, 98 Stat. 2170 (Oct. 12, 1984).

§ 0.92 National Institute of Justice.

The National Institute of Justice is headed by a Director appointed by the

President. Under the general authority of the Attorney General and reporting through the Assistant Attorney General, Office of Justice Programs, the Director performs functions and administers programs, including provision of financial assistance, under 42 U.S.C. 3721–3723 to support basic and applied research into justice issues.

§0.93 Bureau of Justice Statistics.

The Bureau of Justice Statistics is headed by a Director appointed by the President. Under the general authority of the Attorney General and reporting through the Assistant Attorney General, Office of Justice Programs, the Director performs functions and administers programs, including provision of financial assistance, under 42 U.S.C. 3731–3734, to provide a variety of statistical services for the criminal justice community.

§0.94 Office of Juvenile Justice and Delinquency Prevention.

The Office of Juvenile Justice and Delinquency Prevention is headed by an Administrator appointed by the President. Under the general authority of the Attorney General and reporting through the Assistant Attorney General, Office of Justice Programs, the Administrator performs functions and administers programs, including provision of financial assistance, under 42 U.S.C. 5601 *et seq.*, relating to juvenile delinquency, the improvement of juvenile justice systems and missing children.

§0.94–1 Bureau of Justice Assistance.

(a) The Bureau of Justice Assistance is headed by a Director appointed by the Attorney General. Under the general authority of the Attorney General and reporting through the Assistant Attorney General, Office of Justice Programs, the Director performs functions and administers programs, including provision of financial assistance, under 42 U.S.C. 3741–3748; 3761–3764; and 3769, relating to the administration of State and local criminal justice systems. The Director also administers the Public Safety Officers' Death Benefits Program under 42 U.S.C. 3796, *et seq.*

(b) Subject to the authority and direction of the Attorney General, the Director of the Bureau of Justice Assistance is authorized to exercise the power and authority vested in the Attorney General by Executive Order No. 11755 of December 29, 1973, 39 FR 779, with respect to certification and revoking certification of work-release laws or regulations.

[Order No. 1111–85, 50 FR 43385, Oct. 25, 1985; Order No. 1145–86, 51 FR 29464, Aug. 18, 1986]

Subpart Q—Bureau of Prisons

CROSS REFERENCE: For regulations pertaining to the Bureau of Prisons, see parts 6 and 7 of this chapter.

§0.95 General functions.

The Director of the Bureau of Prisons shall direct all activities of the Bureau of Prisons including:

(a) Management and regulation of all Federal penal and correctional institutions (except military or naval institutions), and prison commissaries.

(b) Provision of suitable quarters for, and safekeeping, care, and subsistence of, all persons charged with or convicted of offenses against the United States or held as witnesses or otherwise.

(c) Provision for the protection, instruction, and discipline of all persons charged with or convicted of offenses against the United States.

(d) Classification, commitment, control, or treatment of persons committed to the custody of the Attorney General.

(e) Payment of rewards with respect to escaped Federal prisoners (18 U.S.C. 3059).

(f) Certification with respect to the insanity or mental incompetence of a prisoner whose sentence is about to expire pursuant to section 4247 of title 18 of the U.S. Code.

(g) Entering into contracts with State or territorial officials for the custody, care, subsistence, education, treatment, and training of State or territorial prisoners, upon certification with respect to the availability of proper and adequate treatment facilities and personnel, pursuant to section 5003 of title 18 of the U.S. Code.

(h) Conduct of studies and the preparation and submission of reports and recommendations to committing courts respecting disposition of cases in which defendants have been committed for such purposes pursuant to 18 U.S.C. 4205(c).

(i) Conduct and prepare, or cause to be conducted and prepared, studies and submit reports to the court and the attorneys with respect to disposition of cases in which juveniles have been committed, pursuant to 18 U.S.C. 5037, and to contract with public or private agencies or individuals or community-based facilities for the observation and study and the custody and care of juveniles, pursuant to 18 U.S.C. 5040.

(j) Observation, conduct of studies, and preparation of reports in cases in which youth offenders have been committed by the courts for such purposes pursuant to section 5010(e) of title 18 of the United States Code.

(k) Conduct of examinations to determine whether an offender is an addict and is likely to be rehabilitated through treatment, as well as the preparation and submission of reports to committing courts, pursuant to section 4252 of title 18 of the United States Code.

(l) Transmittal of reports of boards of examiners and certificates to clerks of the district courts pursuant to section 4245 of title 18 of the U.S. Code.

(m) Providing technical assistance to State and local governments in the improvement of their correctional systems (18 U.S.C. 4042).

[Order No. 423–69, 34 FR 20388, Dec. 31, 1969, as amended by Order No. 445–70, 35 FR 19397, Dec. 23, 1970; Order No. 579–74, 39 FR 37771, Oct. 24, 1974; Order No. 960–81, 46 FR 52348, Oct. 27, 1981]

§ 0.96 Delegations.

The Director of the Bureau of Prisons is authorized to exercise or perform any of the authority, functions, or duties conferred or imposed upon the Attorney General by any law relating to the commitment, control, or treatment of persons (including insane prisoners and juvenile delinquents) charged with or convicted of offenses against the United States, including the taking of final action in the following-described matters:

(a) Requesting the detail of Public Health Service officers for the purpose of furnishing services to Federal penal and correctional institutions (18 U.S.C. 4005).

(b) Consideration, determination, adjustment, and payment of claims in accordance with 31 U.S.C. 3722.

(c) Designating places of imprisonment or confinement where the sentences of prisoners shall be served and ordering transfers from one institution to another, whether maintained by the Federal Government or otherwise, pursuant to 18 U.S.C. 4082 as it existed before the enactment of Pub. L. 98–473 (applicable to offenses committed prior to November 1, 1987).

(d) Extending the limits of the place of confinement of prisoners for the purposes specified, and within the limits established, by 18 U.S.C. 4082(c) as it existed before the enactment of Public Law 98–473, and otherwise performing the functions of the Attorney General under that section (applicable to offenses committed prior to November 1, 1987).

(e) Designation of agents for the transportation of prisoners (18 U.S.C. 4008).

(f) Prescribing regulations for the use of surplus funds in ''Commissary Funds, Federal Prisons'' to provide advances not in excess of $150 to prisoners at the time of their release pursuant to 18 U.S.C. 4284 as it existed before the enactment of Public Law 98–473 (applicable to offenses committed prior to November 1, 1987).

(g) Allowance, forfeiture, and restoration of all good time pursuant to 18 U.S.C. 4161, 4162, 4165, and 4166 as those sections existed before the enactment of Public Law 98–473 (applicable to offenses committed prior to November 1, 1987).

(h) Release of prisoners held solely for nonpayment of fine as provided in 18 U.S.C. 3569 as it existed before the enactment of Public Law 98–473 (applicable to offenses committed prior to November 1, 1987).

(i) Furnishing transportation, clothing, and payments to released prisoners pursuant to 18 U.S.C. 4281 as it existed before the enactment of Public Law 98–473 (applicable to offenses committed prior to November 1, 1987).

(j) Performing the functions of the Attorney General under the provisions of 18 U.S.C. chapter 313, Offenders with Mental Disease or Defect (18 U.S.C. 4241–4247).

(k) Settlement of claims arising under the Federal Tort Claims Act as provided in 28 CFR 0.172.

(l) Entering into reciprocal agreements with fire organizations for mutual aid and rendering emergency assistance in connection with extinguishing fires within the vicinity of a Federal correctional facility, as authorized by sections 2 and 3 of the Act of May 27, 1955 (42 U.S.C. 1856a, 1856b).

(m) Deciding upon requests by states for temporary transfers of custody of inmates for prosecution under Article IV of the Interstate Agreement on Detainers (84 Stat. 1399) and pursuant to other available procedures; and receiving and reviewing requests by the executive authority of states or the District of Columbia for, and authorizing the transfer of, inmates pursuant to 18 U.S.C. 4085 as it existed before the enactment of Public Law 98–473 (applicable to offenses committed prior to November 1, 1987).

(n) Prescribing rules and regulations applicable to the carrying of firearms by Bureau of Prisons officers and employees (18 U.S.C. 3050).

(o) Promulgating rules governing the control and management of Federal penal and correctional institutions and providing for the classification, government, discipline, treatment, care, rehabilitation, and reformation of inmates confined therein (18 U.S.C. 4001, 4041, and 4042).

(p) Establishing and designating Bureau of Prisons Institutions (18 U.S.C. 4001, 4042).

(q) Granting permits to states or public agencies for rights-of-way upon lands administered by the Director in accordance with the provisions of 43 U.S.C. 931c and 43 U.S.C. 961 (18 U.S.C. 4001, 4041, 4042, 43 U.S.C. 931c, 961).

(r) Authority under the provisions of 18 U.S.C. 4082(b) to provide law enforcement representatives with information on Federal prisoners who have been convicted of felony offenses and who are confined at a residential community treatment center located in the geographical area in which the requesting agency has jurisdiction (18 U.S.C. 4082).

(s) Approving inmate disciplinary and good time regulations (18 U.S.C. 3624).

(t) Contracting, for a period not exceeding three years, with the proper authorities of any State, Territory, or political subdivision thereof, for the imprisonment, subsistence, care, and proper employment of persons convicted of offenses against the United States (18 U.S.C. 4002).

[Order No. 1617–92, 57 FR 38772, Aug. 27, 1992, as amended by Order No. 1884–94, 59 FR 29717, June 9, 1994; Order No. 2204–99, 64 FR 4295, Jan. 28, 1999]

§0.96a Interstate Agreement on Detainers.

The Director of the Bureau of Prisons is designated as the U.S. Officer under Article VII of the Interstate Agreement on Detainers (84 Stat. 1402).

[Order No. 462–71, 36 FR 12212, June 29, 1971]

§0.96b Exchange of prisoners.

The Director of the Bureau of Prisons and officers of the Bureau of Prisons designated by him are authorized to receive custody of offenders and to transfer offenders to and from the United States of America under a treaty as referred to in Public Law 95–144; to make arrangements with the States and to receive offenders from the States for transfer to a foreign country; to act as an agent of the United States to receive the delivery from a foreign government of any person being transferred to the United States under such a treaty; to render to foreign countries and to receive from them certifications and reports required under a treaty; and to receive custody and carry out the sentence of imprisonment of such a transferred offender as required by that statute and any such treaty.

[Order No. 758–77, 42 FR 63139, Dec. 15, 1977]

§0.96c Cost of incarceration.

(a) The Attorney General is required to establish and collect a fee to cover the cost of one year of incarceration. These provisions apply to any person who is convicted in a United States District Court and committed to the custody of the Attorney General, and

who begins service of sentence on or after December 27, 1994. For the purposes of this subpart, revocation of parole or supervised release shall be treated as a separate period of incarceration for which a fee may be imposed.

(b) The fee to cover the costs of incarceration shall be calculated by dividing the number representing the obligation encountered in Bureau of Prisons facilities (excluding activation costs) by the number of inmate-days incurred for the year, and by then multiplying the quotient by 365. The resulting figure represents the average cost to the Bureau for confining an inmate for one year.

(c) The Director of the Bureau of Prisons is delegated the authority to collect the fee to cover the cost of incarceration from inmates committed to the custody of the Attorney General and to promulgate all regulations concerning the collection of the fee.

(d) The Director shall review and determine the amount of the fee not less than annually in accordance with the formula set forth in paragraph (b) of this section. The Director shall publish each year's fee as a Notice in the FEDERAL REGISTER.

[Order No. 1932–94, 59 FR 60558, Nov. 25, 1994]

§ 0.97 Redelegation of authority.

The Director of the Bureau of Prisons is authorized to redelegate to any of his subordinates any of the authority, functions or duties vested in him by this subpart Q. The Director may make similar delegations to any other employee of any Bureau, Board, Office, or Division of the Department of Justice with the consent of the head of that Bureau, Board, Office, or Division, and after written notification to the Attorney General or designee. A redelegation of authority is limited to employees of the Department of Justice. Existing redelegations by the Director of the Bureau of Prisons shall continue in force and effect until modified or revoked.

[Order No. 1150–86, 51 FR 31939, Sept. 8, 1986]

§ 0.98 Functions of Commissioner of Federal Prison Industries.

The Director of the Bureau of Prisons is authorized as ex officio Commissioner of Federal Prison Industries and in accordance with the policy fixed by its Board of Directors to:

(a) Exercise jurisdiction over all industrial enterprises in all Federal penal and correctional institutions.

(b) Sponsor vocational training programs in Federal penal and correctional institutions.

(c) Contract for the transfer of property or equipment from the District of Columbia for industrial employment and training of prisoners confined in a penal or correctional institution of the District of Columbia, pursuant to 18 U.S.C. 4122.

§ 0.99 Compensation to Federal prisoners.

The Board of Directors of Federal Prison Industries, or such officer of the corporation as the Board may designate, may exercise the authority vested in the Attorney General by section 4126 of title 18 of the U.S. Code, as amended, to prescribe rules and regulations governing the payment of compensation to inmates of Federal penal and correctional institutions employed in any industry, or performing outstanding services in institutional operations, and to inmates or their dependents for injuries suffered in any industry or in any work activity in connection with the maintenance of operation of the institution where confined.

APPENDIX TO SUBPART Q OF PART 0—CONFINEMENT OF PERSONS IN DISTRICT OF COLUMBIA CORRECTIONAL INSTITUTIONS

By virtue of the authority vested in me by the Act of September 1, 1916, 39 Stat. 711 (D.C. Code section 24–402), by section 11 of the Act of July 15, 1932, as added by the Act of June 6, 1940, 54 Stat. 244 (D.C. Code section 24–425), and by the Act of September 10, 1965 (18 U.S.C. 4082).

(a) The Mayor of the District of Columbia or his authorized representative is hereby authorized to transfer such prisoners as may be in his custody and supervision, by virtue of having been placed in a correctional institution of the District of Columbia pursuant to the authority of the Attorney General,

from such institution to any available, suitable, or appropriate institution or facility (including a residential community treatment center) within the District of Columbia, and the Mayor or his authorized representative is further authorized to extend the limits of the place of confinement of such prisoners for the purposes specified, and within the limits established, by the Act of September 10, 1965 (18 U.S.C. 4082).

(b) The authority conferred by subsection (a) shall not include any extension of the limits of confinement for any prisoner serving a sentence for a crime of violence and not participating in a furlough program as of December 22, 1976, unless such prisoner has served at least twelve months, has not been denied parole, without recommendation for furlough, at his most recent parole hearing (whether such hearing was held before or after extension of the limits of his confinement was granted), and

(1) Is within twelve months of the expiration of his maximum sentence, without reduction, or

(2) Is within twelve months of a date on which he will be eligible for parole from confinement, or

(3) Has served at least ninety percent of his minimum sentence, without reduction.

By October 15 of each year, there shall be submitted to the Associate Attorney General a report concerning each prisoner serving a sentence for a crime of violence whose limits of confinement have been extended during the twelve-month period ending the preceding September 30, indicating the offense and term for which, and the court by which, the prisoner was sentenced with respect to his present confinement; all other criminal offenses of which the prisoner has been convicted; the date, duration and purpose of each extension of the limits of his confinement; all parole board actions with respect to the prisoner; and all infractions of the terms of extension, violations of prison rules, or criminal offenses with which the prisoner has been officially charged since the beginning of his confinement.

(c) With respect to all other prisoners, the authority conferred by subsection (a) may be exercised by an authorized representative designated by the Mayor.

(d) As used in this Order *crime of violence* means murder, manslaughter, rape, kidnapping, robbery, burglary, assault with intent to kill, assault with intent to rape, assault with intent to rob or extortion involving the threat or use of violence to person.

[Order No. 636–76, 41 FR 3289, Jan. 26, 1976, as amended by Order No. 676–76, 41 FR 56802, Dec. 30, 1976; Order No. 960–81, 46 FR 52348, Oct. 27, 1981]

Subpart R—Drug Enforcement Administration

§0.100 General functions.

The following-described matters are assigned to, and shall be conducted, handled, or supervised by, the Administrator of the Drug Enforcement Administration:

(a) Functions vested in the Attorney General by sections 1 and 2 of Reorganization Plan No. 1 of 1968.

(b) Except where the Attorney General has delegated authority to another Department of Justice official to exercise such functions, and except where functions under 21 U.S.C. 878(a)(5) do not relate to, arise from, or supplement investigations of matters concerning drugs, functions vested in the Attorney General by the Comprehensive Drug Abuse Prevention and Control Act of 1970, as amended. This will include functions which may be vested in the Attorney General in subsequent amendments to the Comprehensive Drug Abuse Prevention and Control Act of 1970, and not otherwise specifically assigned or reserved by him.

(c) Functions vested in the Attorney General by section 1 of Reorganization Plan No. 2 of 1973 and not otherwise specifically assigned.

[Order No. 520–73, 38 FR 18380, July 10, 1973, as amended by Order No. 960–81, 46 FR 52348, Oct. 27, 1981; Order No. 1203–87, 52 FR 24447, July 1, 1987; Order No. 2204–99, 64 FR 4295, Jan. 28, 1999; Order No. 2666–2003, 68 FR 14899, Mar. 27, 2003]

§0.101 Specific functions.

The Administrator of the Drug Enforcement Administration shall be responsible for:

(a) The development and implementation of a concentrated program throughout the Federal Government for the enforcement of Federal drug laws and for cooperation with State and local governments in the enforcement of their drug abuse laws.

(b) The development and maintenance of a National Narcotics Intelligence System in cooperation with Federal, State, and local officials, and the provision of narcotics intelligence to any Federal, State, or local official that the Administrator determines has

a legitimate official need to have access to such intelligence.

(c) The development and implementation of a procedure to release property seized under section 511 of the Controlled Substances Act (21 U.S.C. 881) to any innocent party having an immediate right to possession of the property, when the Administrator, in his discretion, determines it is not in the interests of justice to initiate forfeiture proceedings against the property.

(d) Payment of awards (including those over $10,000) under 28 U.S.C. 524(c)(2) and purchase of evidence (including the authority to pay more than $100,000) under 28 U.S.C. 524(c)(1)(F).

[Order No. 520–73, 38 FR 18380, July 10, 1973, as amended by Order No. 565–74, 39 FR 15876, May 6, 1974; Order No. 898–80, 45 FR 44267, July 1, 1980; Order No. 960–81, 46 FR 52348, Oct. 27, 1981; Order No. 1126–86, 51 FR 7443, Mar. 4, 1986]

§ 0.102 Drug enforcement policy coordination.

The Administrator of the Drug Enforcement Administration shall report to the Attorney General, through the Deputy Attorney General or the Associate Attorney General, as directed by the Attorney General.

[Order No. 1429–90, 55 FR 28909, July 16, 1990]

§ 0.103 Release of information.

(a) The Administrator of DEA is authorized—

(1) To release information obtained by DEA and DEA investigative reports to Federal, State, and local officials engaged in the enforcement of laws related to controlled substances.

(2) To release information obtained by DEA and DEA investigative reports to Federal, State, and local prosecutors, and State licensing boards, engaged in the institution and prosecution of cases before courts and licensing boards related to controlled substances.

(3) To authorize the testimony of DEA officials in response to subpoenas or demands issued by the prosecution in Federal, State, or local criminal cases involving controlled substances.

(b) Except as provided in paragraph (a) of this section, all other production of information or testimony of DEA officials in response to subpoenas or demands of courts or other authorities is governed by subpart B of part 16 of this chapter. However, it should be recognized that subpart B is not intended to restrict the release of noninvestigative information and reports as deemed appropriate by the Administrator of DEA. For example, it does not inhibit the exchange of information between governmental officials concerning the use and abuse of controlled substances as provided for by section 503(a)(1) of the Controlled Substances Act (21 U.S.C. 873(a)(1)).

[Order No. 520–73, 38 FR 18380, July 10, 1973, as amended by Order No. 2614–2002, 67 FR 58990, Sept. 19, 2002]

§ 0.103a Delegations respecting claims against the Drug Enforcement Administration.

(a) The Administrator of DEA is authorized to exercise the power and authority vested in the Attorney General under the Act of December 7, 1989, Public Law 101–203, 103 Stat. 1805 (31 U.S.C. 3724) with regard to claims thereunder arising out of the lawful activities of DEA personnel in an amount not to exceed $50,000.00 in any one case.

(b) Notwithstanding the provisions of 28 CFR 0.104, the Administrator of DEA is authorized to redelegate the power and authority vested in him in paragraph (a) of this section to the Chief Counsel of DEA and the Chief Counsel's designee within the Office of Chief Counsel. This authority shall not be further redelegated below the Associate Chief Counsel level.

[Order No. 1751–93, 58 FR 35371, July 1, 1993]

§ 0.104 Redelegation of authority.

The Administrator of the Drug Enforcement Administration is authorized to redelegate to any of his subordinates or any of the officers or employees of the Immigration and Naturalization Service any of the powers and functions vested in him by this subpart R.

[Order 1146–86, 51 FR 30485, Aug. 27, 1986]

APPENDIX TO SUBPART R OF PART 0—REDELEGATION OF FUNCTIONS

SECTION 1. *Scope of authority.* The authority delegated by this order is applicable to all

officers and employees of the Drug Enforcement Administration (DEA) and Federal Bureau of Investigation (FBI).

Sec. 2. Supervisors. All Special Agents-in-Charge of the DEA and the FBI are authorized to conduct enforcement hearings under 21 U.S.C. 883, and to take custody of seized property under 21 U.S.C. 881. All Special Agents-in-Charge of the DEA and the FBI, the DEA Deputy Administrator, Assistant Administrators and Office Heads, and the FBI Executive Assistant Directors, Assistant Directors, Deputy Assistant Directors, and Section Chiefs, are authorized to release information pursuant to 28 CFR 0.103(a)(1) and (2) that is obtained by the DEA and the FBI, and to authorize the testimony of DEA and FBI officials in response to prosecution subpoenas or demands under 28 CFR 0.103(a)(3). All DEA Laboratory Directors are authorized to release information pursuant to 28 CFR 0.103(a)(1) and (2) that is obtained by a DEA laboratory, and to authorize the testimony of DEA laboratory personnel in response to prosecution subpoenas or demands under 28 CFR 0.103(a)(3). All DEA Special Agents-in-Charge are authorized to take custody of, and make disposition of, controlled substances seized pursuant to 21 U.S.C. 824(g).

SEC. 3. *Enforcement officers.* (a) All DEA criminal investigators (series 1811 under Office of Personnel Management regulations) and special agents of the FBI are authorized to exercise all of the powers of enforcement personnel granted by 21 U.S.C. 876, 878, and 879; to serve subpoenas, administer oaths, examine witnesses, and receive evidence under 21 U.S.C. 875; to execute administrative inspection warrants under 21 U.S.C. 880; and to seize property under 21 U.S.C. 881 and 21 CFR 1316.71 *et seq.*

(b) All DEA Diversion Investigators (series 1801 under Office of Personnel Management regulations) are authorized to administer oaths and serve subpoenas under 21 U.S.C. 875 and 876; to conduct administrative inspections and execute administrative inspection warrants under 21 U.S.C. 878(2) and 880; to seize property incident to compliance and registration inspections and investigations under 21 U.S.C. 881; and to seize or place controlled substances under seal pursuant to 21 U.S.C. 824.

Sec. 4. Issuance of subpoenas. (a) The Chief Inspector of the DEA; the Deputy Chief Inspectors and Associate Deputy Chief Inspectors of the Office of Inspections and the Office of Professional Responsibility of the DEA; all Special Agents-in-Charge of the DEA and the FBI; DEA Inspectors assigned to the Inspection Division; DEA Associate Special Agents-in-Charge; DEA and FBI Assistant Special Agents-in-Charge; DEA Resident Agents-in-Charge; DEA Diversion Program Managers; FBI Supervisory Senior Resident Agents; DEA Special Agent Group Supervisors; and those FBI Special Agent Squad Supervisors who have management responsibility over Organized Crime/Drug Program Investigations, are authorized to sign and issue subpoenas with respect to controlled substances, listed chemicals, tableting machines or encapsulating machines under 21 U.S.C. 875 and 876 in regard to matters within their respective jurisdictions.

(b) The Administrative Law Judge of DEA is authorized to sign and issue subpoenas to compel the attendance of witnesses and the production of documents and materials to the extent necessary to conduct administrative hearings pending before him.

Sec. 5. Legal functions. The Chief Counsel and the Director of DEA's Mid-Atlantic Laboratory are authorized to execute any certification required to authenticate any documents pursuant to 28 CFR 0.146. The Chief Counsel is also authorized to adjust, determine, compromise, and settle any claims involving the Drug Enforcement Administration under 28 U.S.C. 2672 relating to tort claims where the amount of the proposed adjustment, compromise, settlement or award does not exceed $2,500; to formulate and coordinate the proceedings relating to the conduct of hearings under 21 U.S.C. 875, including the signing and issuance of subpoenas, examining of witnesses, and receiving evidence; to adjust, determine, compromise and settle *any* tort claims when such claims arise in foreign countries in connection with DEA operations abroad, and to conduct enforcement hearings under 21 U.S.C. 883. The Forfeiture Counsel of the DEA is authorized to exercise all necessary functions with respect to decisions on petitions under 19 U.S.C. 1618 for remission or mitigation of forfeitures incurred under 21 U.S.C. 881.

SEC. 6. *Import and export permits.* The Deputy Assistant Administrator of the DEA Office of Diversion Control, the Deputy Director of the DEA Office of Diversion Control, the Chief of the Drug Operations Section of the DEA Office of Diversion Control, and the Chief of the International Drug Unit of the Drug Operations Section of the DEA Office of Diversion Control are authorized to perform all and any functions with respect to the issuance of importation and exportation permits for controlled substances under 21 U.S.C. 952 and 953, and all functions in regard to transshipments and intransit shipments of controlled substances under 21 U.S.C. 954.

SEC. 7. *Promulgation of regulations.* The Deputy Assistant Administrator of the DEA Office of Diversion Control is authorized to exercise all necessary functions with respect to the promulgation and implementation of the following regulations published in chapter II, title 21, Code of Federal Regulations:

(a) Part 1301, incident to the registration of manufacturers, distributors, and dispensers of controlled substances, except that

final orders in connection with suspension, denial or revocation of registration shall be made by the Deputy Administrator of DEA.

(b) Part 1302 relating to labelling and packaging requirements for controlled substances.

(c) Part 1304 relating to records and reports of registrants.

(d) Part 1305 relating to order forms.

(e) Part 1306 relating to prescriptions, except provisions relating to dispensing of narcotic drugs for maintenance purposes.

(f) Part 1307, title 21, Code of Federal Regulations, relating to miscellaneous provisions, except § 1307.31 concerning special exempt persons.

(g) The following sections of part 1308: §§ 1308.21 and 1308.22 relating to excluded nonnarcotic substances; §§ 1308.23 and 1308.24 relating to exempt chemical preparations; §§ 1308.25 and 1308.26 relating to excluded veterinary anabolic steroid implant products; §§ 1308.31 and 1308.32 relating to exempted prescription products; and §§ 1308.33 and 1308.34 relating to exempt anabolic steroid products, except that any final order following a contested proposed rulemaking shall be issued by the Deputy Administrator of DEA.

(h) Part 1309, incident to the registration of manufacturers, distributors, importers and exporters of List I chemicals, except that final orders in connection with suspension, denial or revocation of registration shall be made by the Deputy Administrator of DEA.

(i) Part 1310, relating to records, reports and identification of parties to transactions in listed chemicals and certain machinery, but not including the authority to add and delete listed chemicals pursuant to 21 CFR 1310.02.

(j) Part 1311 relating to registration of importers and exporters of controlled substances, except that final orders in connection with suspension, denial or revocation of registration shall be made by the Deputy Administrator of DEA.

(k) Part 1312 relating to importation and exportation of controlled substances, except that all final orders following a contested proposed rulemaking regarding the denial of an application for an import, export or transshipment permit shall be made by the Deputy Administrator of DEA.

(l) Part 1313, relating to the importation and exportation of precursors and essential chemicals, but not including the authority to suspend shipments under 21 CFR 1313.41.

SEC. 8. *Financial functions.* The Controller of the DEA is authorized to settle any employee claims filed under the Military Personnel and Civilian Employees' Claims Act in an amount not to exceed $25,000.

SEC. 9. *Chemical Diversion Act functions.* The Chief of Operations of the DEA, Operations Division, is authorized to furnish, or cause to be furnished, descriptions of persons with whom regulated transactions may not be completed without prior approval of the DEA; to approve such transactions pursuant to 21 U.S.C. 830(b) and 21 CFR 1310.05(b); and to approve or disapprove regular customer or regular importer status under 21 U.S.C. 971 and 21 CFR 1313.15 and 1313.24.

Sec. 10. Deputization of State and Local Law Enforcement Officers. The Chief, Investigative Support Section, Office of Operations Management, Operations Division, is authorized to exercise all necessary functions with respect to the deputization of state and local law enforcement officers as Task Force Officers of DEA pursuant to 21 U.S.C. 878(a).

Sec. 11. Cross-Designation of Federal Law Enforcement Officers. The Chief, Investigative Support Section, Office of Operations Management, Operations Division is authorized to exercise all necessary functions with respect to the cross-designation of Federal law enforcement officers to undertake title 21 drug investigations under supervision of the DEA pursuant to 21 U.S.C. 873(b).

SEC. 12. *All other functions.* The Deputy Administrator is authorized to exercise all necessary functions under 21 CFR parts 1300 through 1316, except those functions otherwise delegated within this subpart. This will include functions which may be vested in the Administrator in subsequent amendments to 21 CFR parts 1300 through 1316 and not otherwise specifically assigned or reserved by him.

[47 FR 43370, Oct. 1, 1982, as amended at 49 FR 41247, Oct. 22, 1984; 50 FR 8607, Mar. 4, 1985; 50 FR 28769, July 16, 1985; 54 FR 50739, Dec. 11, 1989; 55 FR 1583, Jan. 17, 1990; 55 FR 20456, May 17, 1990; 57 FR 7877, Mar. 5, 1992; 59 FR 23637, May 6, 1994; 59 FR 38121, July 27, 1994; 60 FR 46019, Sept. 5, 1995; 61 FR 46720, Sept. 5, 1996; 62 FR 32032, June 12, 1997; 62 FR 38029, July 16, 1997; 62 FR 52492, 52493, Oct. 8, 1997; Order No 2614–2002, 67 FR 58990, September 19, 2002]

Subpart S—Immigration and Naturalization Service

§ 0.105 General functions.

The Commissioner of the Immigration and Naturalization Service shall:

(a) Subject to limitations contained in section 103 of the Immigration and Nationality Act (8 U.S.C. 1103) and excepting the authority delegated to the Executive Office for Immigration Review, the Board of Immigration Appeals, the Office of the Chief Immigration Judge, Immigration Judges, and the Office of the Chief Administrative Hearing Officer, administer and enforce

the Immigration and Nationality Act and all other laws relating to immigration (including but not limited to admission, exclusion, and deportation), naturalization, and nationality. Nothing in this paragraph shall be construed to authorize the Commissioner of Immigration and Naturalization to supervise the litigation of or to approve the filing of records on review, appeals, or petitions for writs of certiorari or to intervene or have independent representation in cases under the immigration and nationality laws except as provided in paragraph (e) of this section.

(b) For the purposes of paragraph (a) of this section, and as limited therein, exercise or perform any of the authority, functions, or duties conferred or imposed upon the Attorney General by the laws mentioned in that paragraph, including the authority to issue regulations.

(c) Investigate alleged violations of the immigration and nationality laws, and make recommendations for prosecutions when deemed advisable.

(d) Patrol the borders of the United States to prevent the entry of aliens into the United States in violation of law.

(e) Supervise naturalization work in the specific courts designated by section 310 of the Immigration and Nationality Act (8 U.S.C. 1421) to have jurisdiction in such matters, including the requiring of accountings from the clerks of such courts for naturalization fees collected, investigation through field officers of the qualifications of citizenship applicants, and representation of the Government at all court hearings.

(f) Cooperate with the public schools in providing citizenship textbooks and other services for the preparation of candidates for naturalization.

(g) Register and fingerprint aliens in the United States, as required by section 262 of the Immigration and Nationality Act (8 U.S.C. 1304).

(h) Prepare reports on private bills pertaining to immigration matters.

(i) Designate within the Immigration and Naturalization Service a certifying officer, and an alternate, to certify copies of documents issued by the Commissioner, or his designee, which are required to be filed with the Office of the Federal Register.

(j) Direct officers and employees of the Immigration and Naturalization Service, assigned to accompany commercial aircraft, to perform the functions of a U.S.C. deputy marshal as a peace officer, in particular those set forth in 28 U.S.C. 570 and 18 U.S.C. 3053: (1) While aboard any aircraft to which they have been assigned, or (2) while within the general vicinity of such aircraft so long as it is within the jurisdiction of the United States. Such functions shall be in addition to those vested in such officers and employees pursuant to law.

(k) Insure that a copy of any asylum application filed with INS shall be sent simultaneously to the Asylum Policy and Review Unit and to the Bureau of Human Rights and Humanitarian Affairs at the Department of State.

[Order No. 423–69, 34 FR 20388, Dec. 31, 1969, as amended by Order 445–70, 35 FR 19397, Dec. 23, 1970; Order 699–77, 42 FR 15315, Mar. 21, 1977; Order 960–81, 46 FR 52348, Oct. 27, 1981; Order 998–83, 48 FR 8056, Feb. 25, 1983; Order 1176–87, 52 FR 11044, Apr. 7, 1987; Order 1237–87, 52 FR 44971, Nov. 24, 1987; Order 1245–87, 52 FR 48998, Dec. 29, 1987]

§0.106 Certificates for expenses of unforeseen emergencies.

The Commissioner of Immigration and Naturalization is authorized to exercise the power and authority vested in the Attorney General by section 6 of the act of July 28, 1950, 64 Stat. 380 (8 U.S.C. 1555), to make certificates with respect to expenses of unforeseen emergencies of a confidential character: *Provided,* That each such certificate made by the Commissioner of Immigration and Naturalization shall be approved by the Attorney General.

§0.107 Representation on committee for visit-exchange.

The Commissioner of Immigration and Naturalization shall be a member of the committee which represents the Department of Justice in the development and implementation of plans for exchanging visits between the Iron Curtain countries and the United States and shall have authority to designate an alternate to serve on such committee.

§ 0.108 Redelegation of authority.

The Commissioner of the Immigration and Naturalization Services may redelegate to any employee of the Service or the Department of Justice any of the powers, privileges, or duties conferred or imposed on the Commissioner by § 0.105. The Commissioner is authorized to confer or impose upon any employee of the United States, with the consent of the head of the Department or other independent establishment under whose jurisdiction the employee is serving, any of the powers, privileges, or duties conferred or imposed on the Commissioner by § 0.105. Existing redelegations by the Commissioner shall continue in force and effect until modified or revoked.

[Order No. 1150–86, 51 FR 31939, Sept. 8, 1986]

§ 0.109 Implementation of the Treaty of Friendship and General Relations Between the United States and Spain.

The Commissioner of Immigration and Naturalization and immigration officers (as defined in 8 CFR 103.1(i)) are hereby designated as ''competent national authorities'' on the part of the United States within the meaning of Article XXIV of the Treaty of Friendship and General Relations Between the United States and Spain (33 Stat. 2105, 2117), and shall fulfill the obligations assumed by the United States pursuant to that Article in the manner and form prescribed.

§ 0.110 Implementation of the Convention Between the United States and Greece.

The Commissioner of Immigration and Naturalization and immigration officers (as defined in 8 CFR 103.1(i)) are hereby designated as ''local authorities'' and ''competent officers'' on the part of the United States within the meaning of Article XIII of the Convention Between the United States and Greece (33 Stat. 2122, 2131), and shall fulfill the obligations assumed by the United States pursuant to that Article in the manner and form prescribed.

Subpart T—United States Marshals Service

§ 0.111 General functions.

The Director of the United States Marshals Service shall direct and supervise all activities of the U.S. Marshals Service including:

(a) Execution of Federal arrest warrants pursuant to rule 4 of the Federal Rules of Criminal Procedure, Federal parole violator warrants pursuant to section 4206 of title 18 U.S. Code, and Federal custodial and extradition warrants as directed.

(b) The service of all civil and criminal process emanating from the Federal judicial system including the execution of lawful writs and court orders pursuant to section 569(b), title 28, U.S. Code.

(c) Provisions for the health, safety, and welfare of Government witnesses and their families, including the psychological well-being and social adjustment of such persons, pursuant to 18 U.S.C. 3521, *et seq.*, and issuance of necessary regulations for this purpose on behalf of the Attorney General.

(d) Administration and implementation of courtroom security requirements for the Federal judiciary.

(e) Protection of Federal jurists, court officers, and other threatened persons in the interests of justice where criminal intimidation impedes the functioning of the Federal judicial process.

(f) Provision of assistance in the protection of Federal property and buildings.

(g) Direction and supervision of a training school for United States Marshals Service personnel.

(h) Disbursement of appropriated funds to satisfy Government obligations incurred in the administration of justice pursuant to 28 U.S.C. 571.

(i) Maintenance of custody, management control, and disposal of property and money seized or forfeited pursuant to any law enforced or administered by the Department of Justice, when the property is seized by the U.S. Marshals Service or delivered to the U.S. Marshals Service in accordance with regulations; and administer the Department of Justice Asset Forfeiture Fund.

(j) Receipt, processing and transportation of prisoners held in the custody of a marshal or transported by the U.S. Marshals Service under cooperative or intergovernmental agreements.

(k) Sustention of custody of Federal prisoners from the time of their arrest by a marshal or their remand to a marshal by the court, until the prisoner is committed by order of the court to the custody of the Attorney General for the service of sentence, otherwise released from custody by the court, or returned to the custody of the U.S. Parole Commission or the Bureau of Prisons.

(l) Coordination and direction of the relationship of the offices of U.S. Marshals with the other organizational units of the Department of Justice.

(m) Approval of staffing requirements of the offices of U.S. Marshals.

(n) Investigation of alleged improper conduct on the part of U.S. Marshals Service personnel.

(o) Acquisition of adequate and suitable detention space, health care and other services and materials required to support prisoners under the custody of the U.S. Marshal who are not housed in Federal facilities.

(p) Approval of ''other necessary expenditures in the line of duty'' of U.S. Marshals and Deputy U.S. Marshals under 28 U.S.C. 567(3).

(q) Exercising the power and authority vested in the Attorney General under 28 U.S.C. 510 to conduct and investigate fugitive matters, domestic and foreign, involving escaped federal prisoners, probation, parole, mandatory release, and bond default violators.

[Order No. 516–73, 38 FR 12917, May 17, 1973, as amended by Order No. 905–80, 45 FR 52145, Aug. 6, 1980; Order No. 960–81, 46 FR 52348, Oct. 27, 1981; Order No. 1108–85, 50 FR 40197, Oct. 2, 1985; Order No. 1131–86, 51 FR 15612, Apr. 25, 1986; Order No. 1376–89, 54 FR 47353, Nov. 14, 1989]

§0.111a Temporary prisoner-witness transfers.

The Director of the United States Marshals Service and officers of the United States Marshals Service designated by him are authorized to exercise the power and authority vested in the Attorney General under 18 U.S.C. 3508 to receive custody from foreign authorities of prisoner-witnesses whose temporary transfer to the United States has been requested; to transport such persons in custody from the cooperating foreign country to the place in the United States at which the criminal proceedings in which they are to testify are pending; to maintain such persons in custody while they are in the United States, subject to any agreement entered into by the Assistant Attorney General for the Criminal Division or his or her delegee with the transferring country regarding the terms or conditions of the transfer; and to return such persons, in custody, to the foreign country when and in the manner designated by the Assistant Attorney General for the Criminal Division or his or her delegee. The Director of the United States Marshals Service and officers of the United States Marshals Service designated by him shall also be authorized to transport, surrender, receive and maintain custody of prisoner-witnesses temporarily transferred from or to the United States pursuant to a treaty, executive agreement, or other legal authority, and accept reimbursement from foreign authorities when appropriate.

[Order No. 1913–94, 59 FR 46551, Sept. 9, 1994]

§0.111B Witness Security Program.

(a) In connection with the protection of a witness, a potential witness, or an immediate family member or close associate of a witness or potential witness, the Director of the United States Marshals Service and officers of the United States Marshals Service designated by the Director may:

(1) Provide suitable documents to enable the person to establish a new identity or otherwise protect the person;

(2) Provide housing for the person;

(3) Provide for the transportation of household furniture and other personal property to a new residence of the person;

(4) Provide to the person a payment to meet basic living expenses in a sum established in accordance with regulations issued by the Director, for such time as the Attorney General determines to be warranted;

(5) Assist the person in obtaining employment;

(6) Provide other services necessary to assist the person in becoming self-sustaining;

(7) Protect the confidentiality of the identify and location of persons subject to registration requirements as convicted offenders under Federal or State law, including prescribing alternative procedures to those otherwise provided by Federal or State law for registration and tracking of such persons; and

(8) Exempt procurement for services, materials, and supplies, and the renovation and construction of safe sites within existing buildings from other provision of law as may be required to maintain the security of protective witnesses and the integrity of the Witness Security Program.

(b) The identity or location or any other information concerning a person receiving protection under 18 U.S.C. 3521 et seq., or any other matter concerning the person or the Program, shall not be disclosed except at the direction of the Attorney General, the Assistant Attorney General in charge of the Criminal Division, or the Director of the Witness Security Program. However, upon request of State or local law enforcement officials, the Director shall, without undue delay, disclose to such officials the identity, location, criminal records, and fingerprints relating to the person relocated or protected when the Director knows or the request indicates that the person is under investigation for or has been arrested for or charged with an offense that is punishable by more than one year in prison or that is a crime of violence.

[Order No. 2511–2001, 66 FR 47383, Sept. 12, 2001]

§ 0.112 Special deputation.

The Director, United States Marshals Service, is authorized to deputize the following persons to perform the functions of a Deputy U.S. Marshal in any district designated by the Director:

(a) Selected officers or employees of the Department of Justice;

(b) Selected federal, state, or local law enforcement officers whenever the law enforcement needs of the U.S. Marshals Service so require;

(c) Selected employees of private security companies in providing courtroom security for the Federal judiciary;

(d) Other persons designated by the Associate Attorney General pursuant to 28 CFR 0.19(a)(3).

All such deputations shall expire on a date certain which shall be stated on the face of the deputation.

[Order No. 1047–84, 49 FR 6485, Feb. 22, 1984, as amended at 61 FR 33657, June 28, 1996]

§ 0.113 Redelegation of authority.

The Director, U.S. Marshals Service, is authorized to redelegate to any of his subordinates any of the powers and functions vested in him by this subpart, except that the authority to approve ''other necessary expenditures in the line of duty'' of U.S. Marshals and Deputy U.S. Marshals may not be delegated below the Assistant Director level.

[Order No. 905–80, 45 FR 52145, Aug. 6, 1980]

§ 0.114 Fees for services.

(a) The United States Marshals Service shall routinely collect fees according to the following schedule:

(1) For process forwarded for service from one U.S. Marshals Service Office or suboffice to another—$8 per item forwarded;

(2) For process served by mail—$8 per item mailed;

(3) For process served or executed personally—$45 per hour (or portion thereof) for each item served by one U.S. Marshals Service employee, agent, or contractor, plus travel costs and any other out-of-pocket expenses. For each additional U.S. Marshals Service employee, agent, or contractor who is needed to serve process—$45 per person per hour for each item served, plus travel costs and any other out-of-pocket expenses.

(4) For copies at the request of any party—$.10 per page;

(5) For preparing notice of sale, bill of sale, or U.S. Marshal deed—$20 per item;

(6) For keeping and advertisement of property attached—actual expenses incurred in seizing, maintaining, and disposing of property.

(b) Out-of-pocket expenses include, but are not limited to, advertising,

inventorying, storage, moving, insurance, guard hire, prisoner transportation and housing, and any other third-party expenditure incurred in executing process.

(c) Travel costs, including mileage, shall be calculated according to 5 U.S.C. chapter 57.

(d) ''Item'' is defined as all documents issued in one action which are served simultaneously on one person or organization.

(e) ''Process'' is defined to include, but is not limited to, a summons and complaint, subpoena, writ, orders, and the execution of court-ordered injunctions, and civil commitments on behalf of a requesting party. Process may also include the execution of ancillary court orders (other than subpoenas issued on behalf of indigent defendants and arrest warrants) in criminal cases.

(f) The United States Marshals Service shall collect the fees enumerated in paragraph (a) of this section, where applicable, even when process in returned to the court or the party unexecuted, as long as service is endeavored.

(g) Pursuant to 28 U.S.C. 565, the Director of the United States Marshals Service is authorized to use funds appropriated for the Service to make payments for expenses incurred pursuant to personal services contracts and cooperative agreements for the service of summonses on complaints, subpoenas, and notices, and for security guards.

(h) The United States Marshals Service shall collect a commission of 3 percent of the first $1,000 collected and 1.5 percent on the excess of any sum over $1,000, for seizing or levying on property (including seizures in admiralty), disposing of such property by sale, setoff, or otherwise, and receiving and paying over money, except that the amount of commission shall not be less than $100.00 and shall not exceed $50,000. The U.S. Marshal's commission shall apply to all judicially ordered sales and/or execution sales, including but not limited to all private mortgage foreclosure sales. if the property is not disposed of by Marshal's sale, the commission shall be set by the court within the range established above.

[56 FR 2437, Jan 23, 1991, as amended by Order No. 2316–2000, 65 FR 47862, Aug. 4, 2000]

Subpart U—Executive Office for Immigration Review

SOURCE: Order 1237–87, 52 FR 44971, Nov. 24, 1987, unless otherwise noted.

§0.115 General functions.

(a) The Executive Office for Immigration Review shall be headed by a Director who shall be assisted by a Deputy Director. The Director shall be responsible for the general supervision of the Board of Immigration Appeals, the Office of the Chief Immigration Judge, and the Office of the Chief Administrative Hearing Officer in the execution of their duties.

(b) The Director may redelegate the authority delegated to him by the Attorney General to the Deputy Director, the Chairman of the Board of Immigration Appeals, the Chief Immigration Judge, or the Chief Administrative Hearing Officer.

[Order No. 2180–98, 63 FR 51519, Sept. 28, 1998]

§0.116 Board of Immigration Appeals.

The Board of Immigration Appeals shall consist of a Chairman, two Vice Chairmen, and twenty other members. The Chairman shall be responsible for providing supervision and establishing internal operating procedures of the Board in the exercise of its authorities and responsibilities as delineated in 8 CFR 3.1 through 3.8.

[Order 1237–87, 52 FR 44971, Nov. 24, 1987, as amended by Order 1992–95, 60 FR 53268, Oct. 13, 1995; Order No. 2062–96, 61 FR 59305, Nov. 22, 1996; Order No. 2180–98, 63 FR 51519, Sept. 28, 1998; Order No. 2297–2000, 65 FR 20069, Apr. 14, 2000; Order No. 2511–2001, 66 FR 47380, Sept. 12, 2001]

§0.117 Office of Chief Immigration Judge.

The Chief Immigration Judge shall provide general supervision to the Immigration Judges in performance of their duties in accordance with the Immigration and Nationality Act, 8 U.S.C. 1226 and 1252 and 8 CFR 3.9.

§0.118 Office of Chief Administrative Hearing Officer.

The Chief Administrative Hearing Officer shall provide general supervision to the Administrative Law Judges in

performance of their duties in accordance with 8 U.S.C. 1324 A and B.

Subpart U–1—Office of Community Oriented Policing Services

SOURCE: Order No. 1948–95, 60 FR 8933, Feb. 16, 1995, unless otherwise noted.

§ 0.119 Organization.

The Office of Community Oriented Policing Services shall be headed by a Director appointed by the Attorney General. The Director shall report to the Attorney General through the Associate Attorney General.

§ 0.120 General functions.

The Director, Office of Community Oriented Policing Services shall:

(a) Exercise the powers and perform the functions vested in the Attorney General by title I and subtitle H of title III of the Violent Crime Control and Law Enforcement Act of 1994 (Pub. L. 103–322); and

(b) Perform such other duties and functions relating to policing and law enforcement as may be specially assigned by the Attorney General or the Associate Attorney General.

§ 0.121 Applicability of existing departmental regulations.

Unless superseded by regulations promulgated by the Office of Community Oriented Policing Services, Departmental regulations set forth in part 18 of this title, applicable to grant programs administered through the Office of Justice Programs, shall apply with equal force and effect to grant programs administered by the Office of Community Oriented Policing Services, with references to the Office of Justice Programs and its components in such regulations deemed to refer to the Office of Community Oriented Policing Services, as appropriate.

Subpart U–2—Office on Violence Against Women

SOURCE: Order No. 2811–2006, 71 FR 19827, Apr. 18, 2006, unless otherwise noted.

§ 0.122 Office on Violence Against Women.

(a) The Director, Office on Violence Against Women, under the general authority of the Attorney General, shall:

(1) Exercise the powers and perform the duties and functions described in section 402(3) of title IV of the 21st Century Department of Justice Appropriations Authorization Act (Pub. L. 107–273); and

(2) Perform such other duties and functions relating to such duties as may be authorized by law or assigned or delegated by the Attorney General, consistent with constitutional limits on the Federal Government's authority to act in this area.

(b) Departmental regulations set forth in 28 CFR part 61, Appendix D, applicable to the Office of Justice Programs, shall apply with equal force and effect to the Office on Violence Against Women, with references to the Office of Justice Assistance, Research and Statistics, and its components, in such regulations deemed to refer to the Office on Violence Against Women, as appropriate.

Subpart U–3—Office of the Federal Detention Trustee

SOURCE: Order No. 2825–2006, 71 FR 36193, June 26, 2006, unless otherwise noted.

§ 0.123 Federal Detention Trustee.

(a) The Office of the Federal Detention Trustee shall be headed by a Detention Trustee appointed by the Attorney General. The Detention Trustee shall exercise all powers and functions authorized by law related to the detention of Federal prisoners in non-Federal institutions or otherwise in the custody of the United States Marshals Service in accordance with 28 U.S.C. 530C(b)(7).

(b) The Detention Trustee shall:

(1) Manage funds appropriated to the Department in the exercise of such detention functions.

(2) Oversee the construction of detention facilities or housing related to such detention.

(3) Set policy regarding such detention, and perform such functions as

may be necessary for the effective policy-level coordination of detention operations.

(4) Oversee contracts for detention services, including, when the Detention Trustee deems appropriate, negotiating purchases and entering into contracts and intergovernmental agreements for detention services, and making required determinations and findings for the acquisition of services.

(5) Manage the Justice Prisoner and Alien Transportation System.

(c) This regulation sets forth the general functions of the Detention Trustee solely for the purpose of internal Department of Justice guidance. It is not intended to, does not, and may not be relied upon to create any rights, substantive or procedural, that are enforceable at law by any party in any matter, civil or criminal.

Subpart V—United States Parole Commission

CROSS REFERENCE: For regulations pertaining to the United States Parole Commission, see parts 2 and 4 of this chapter.

SOURCE: Order No. 663–76, 41 FR 35184, Aug. 20, 1976, unless otherwise noted.

§0.124 United States Parole Commission.

The U.S. Parole Commission is composed of nine Commissioners of whom one is designated Chairman. The Commission:

(a) Has authority, under 18 U.S.C. 4201 *et seq.*, to grant, modify, or revoke paroles of eligible U.S. prisoners serving sentences of more than 1 year, and is responsible for the supervision of parolees and prisoners mandatorily released prior to the expiration of their sentences, and for the determination of supervisory conditions and terms;

(b) Has responsibility in cases in which the committing court specifies that the Parole Commission shall determine the date of parole eligibility of the prisoner;

(c) Has responsibility for determining, in accordance with the Labor-Management Reporting and Disclosure Act of 1959 (29 U.S.C. 504), whether the service as officials in the field of organized labor or in labor oriented management positions of persons convicted of certain crimes is contrary to the purposes of that act; and

(d) Has responsibility under the Employee Retirement Income Security Act of 1974 (29 U.S.C. 1111), for determining whether persons convicted of certain crimes may provide services to, or be employed by, employment benefit plans.

[Order No. 960–81, 46 FR 52349, Oct. 27, 1981]

§0.125 Chairman of U.S. Parole Commission.

The Chairman of the United States Parole Commission shall make any temporary assignment of a Commissioner to act as Vice Chairman, National Appeals Board member, or Regional Commissioner in the case of an absence or vacancy in the position, without the concurrence of the Attorney General.

§0.126 Administrative support.

The Department of Justice shall furnish administrative support to the Commission.

§0.127 Indigent prisoners.

The U.S. Parole Commission is authorized to exercise the authority vested in the Attorney General by section 3569 of title 18, U.S. Code, to make a finding that a parolee is unable to pay a fine in whole or in part and to direct release of such parolee based on such finding.

Subpart V–1—Foreign Claims Settlement Commission

SOURCE: Order No. 960–81, 46 FR 52349, Oct. 27, 1981, unless otherwise noted.

§0.128 Organization.

The Foreign Claims Settlement Commission of the United States is a separate agency within the Department of Justice. It is composed of a full-time Chairman, and two part-time Commissioners. All functions, powers, and duties of the Commission not directly related to adjudicating claims are vested in the Chairman of the Commission, including the functions set forth in section 3 of Reorganization Plan No. 1 of 1954 and the authority to issue rules

and regulations. The Attorney General provides necessary administrative support and services to the Commission.

§ 0.128a General functions.

The Foreign Claims Settlement Commission has been authorized to determine claims of United States nationals for loss of property in specific foreign countries as a result of nationalization or other taking by the government of those countries by the International Claims Settlement Act of 1949, as amended, (22 U.S.C. 1621–1645o); and to determine claims of U.S. nationals and organizations in territories of the United States for damage and loss of property as a result of military operations during World War II and claims of U.S. military personnel and civilian American citizens for having been held in a captured status in specified areas during World War II, the Korean conflict and the Vietnam conflict by the War Claims Act of 1948, as amended (50 U.S.C. app. 2001–2017p).

§ 0.128b Regulations.

All rules of practice and regulations applicable to the management of the affairs of and the adjudication of claims by the Foreign Claims Settlement Commission of the United States are published in 45 CFR chapter V.

Subpart V–2—Professional Responsibility Advisory Office

SOURCE: Order No. 2791–2005, 70 FR 76164, Dec. 23, 2005, unless otherwise noted.

§ 0.129 Professional Responsibility Advisory Office.

(a) The Professional Responsibility Advisory Office is headed by a Director appointed by the Deputy Attorney General. The Director shall be responsible to, and report directly to, the Deputy Attorney General and shall be a member of the Senior Executive Service.

(b) The Professional Responsibility Advisory Office shall:

(1) Advise Department of Justice attorneys on specific questions involving professional responsibility, including compliance with 28 U.S.C. 530b (''Section 530B''), which requires certain federal attorneys to comply with state rules of ethics.

(2) Assist or support training and informational programs for Department attorneys and client agencies concerning Section 530B and other professional responsibility requirements, including disseminating relevant and timely information.

(3) Assemble, centralize and maintain ethics reference materials, including the codes of ethics of the District of Columbia and every state and territory, and any relevant interpretations thereof.

(4) Coordinate with the relevant litigating components of the Department to defend attorneys in any disciplinary or other proceeding where it is alleged that they failed to meet their ethical obligations, provided that the attorney made a good-faith effort to ascertain the ethics requirements and made a good-faith effort to comply with those requirements.

(5) Serve as a liaison with the state and federal bar associations in matters relating to the implementation and interpretation of Section 530B, and amendments and revisions to the various state ethics codes.

(6) Perform such other duties and assignments as deemed necessary from time to time by the Attorney General or the Deputy Attorney General.

(c) Nothing in this subpart shall be construed as affecting the functions or overriding the authority of the Office of Legal Counsel as established by 28 CFR 0.25.

Subpart W—Bureau of Alcohol, Tobacco, Firearms, and Explosives

SOURCE: Order No. 2650–2003, 68 FR 4926, Jan. 31, 2003, unless otherwise noted.

§ 0.130 General functions.

Subject to the direction of the Attorney General and the Deputy Attorney General, the Director of the Bureau of Alcohol, Tobacco, Firearms, and Explosives shall:

(a) Investigate, administer, and enforce the laws related to alcohol, tobacco, firearms, explosives, and arson, and perform other duties as assigned by the Attorney General, including exercising the functions and powers of

the Attorney General under the following provisions of law:

(1) 18 U.S.C. chapters 40 (related to explosives), 44 (related to firearms), 59 (related to liquor trafficking), and 114 (related to trafficking in contraband cigarettes);

(2) Chapter 53 of the Internal Revenue Code of 1986, 26 U.S.C. chapter 53 (related to certain firearms and destructive devices);

(3) Chapters 61 through 80, inclusive, of the Internal Revenue Code of 1986, 26 U.S.C. chapters 61–80, insofar as they relate to activities administered and enforced with respect to chapter 53 of the Internal Revenue Code of 1986, 26 U.S.C. chapter 53;

(4) 18 U.S.C. 1952 and 3667, insofar as they relate to liquor trafficking;

(5) 49 U.S.C. 80303 and 80304, insofar as they relate to contraband described in section 80302(a)(2) or 80302(a)(5); and

(6) 18 U.S.C. 1956 and 1957, insofar as they involve violations of:

(i) 18 U.S.C. 844(f) or (i) (relating to explosives or arson),

(ii) 18 U.S.C. 922(l) (relating to the illegal importation of firearms),

(iii) 18 U.S.C. 924(n) (relating to illegal firearms trafficking),

(iv) 18 U.S.C. 1952 (relating to traveling in interstate commerce in aid of racketeering enterprises insofar as they concern liquor on which Federal excise tax has not been paid);

(v) 18 U.S.C. 2341–2346 (trafficking in contraband cigarettes);

(vi) Section 38 of the Arms Export Control Act, as added by Public Law 94–329, section 212(a)(1), as amended, 22 U.S.C. 2778 (relating to the importation of items on the U.S. Munitions Import List), except violations relating to exportation, in transit, temporary import, or temporary export transactions;

(vii) 18 U.S.C. 1961 insofar as the offense is an act or threat involving arson that is chargeable under State law and punishable by imprisonment for more than one year; and

(viii) Any offense relating to the primary jurisdiction of Bureau of Alcohol, Tobacco, Firearms, and Explosives that the United States would be obligated by a multilateral treaty either to extradite the alleged offender or to submit the case for prosecution if the offender were found within the territory of the United States;

(b) Investigate, seize, and forfeit property involved in a violation or attempted violation within the investigative jurisdiction set out in paragraph (a), under 18 U.S.C. 981 and 982;

(c) Subject to the limitations of 3 U.S.C. 301, exercise the authorities of the Attorney General under section 38 of the Arms Export Control Act, 22 U.S.C. 2778, relating to the importation of defense articles and defense services, including those authorities set forth in 27 CFR part 47; and

(d) Perform any other function related to the investigation of violent crime or domestic terrorism as may be delegated to the Bureau of Alcohol, Tobacco, Firearms, and Explosives by the Attorney General.

§ 0.131 Specific functions.

The Director of the Bureau of Alcohol, Tobacco, Firearms, and Explosives shall:

(a) Operate laboratories in support of Bureau activities; provide, with or without cost, technical and scientific assistance, including expert testimony, to Federal, State, or local agencies; and make available the services of the laboratories to foreign law enforcement agencies and courts under procedures agreed upon by the Secretary of State and the Attorney General;

(b) Operate the National Explosives Licensing Center to review applications for explosives licenses and permits; determine the eligibility of applicants; issue licenses and permits on approved explosives applications; coordinate with field offices the inspection of applicants, licensees, and permittees; and maintain an explosives license and permit database;

(c) Operate the National Firearms Licensing Center to review applications for firearms licenses; determine the eligibility of applicants; issue licenses on approved firearms applications; coordinate with field offices the inspection of applicants and licensees; and maintain a firearms license database;

(d) Maintain and operate the National Firearms Registration and Transfer Record (NFRTR), pursuant to section 5841 of the Internal Revenue

Code of 1986, 26 U.S.C. 5841, as a registry of all National Firearms Act (NFA) firearms in the United States that are not in the possession or under the control of the United States;

(e) Maintain and operate the Arson and Explosives National Repository, a national repository of information on incidents involving arson and the suspected criminal misuse of explosives, under 18 U.S.C. 846(b);

(f) Maintain and operate the National Tracing Center to process requests from Federal, State, local, and foreign law enforcement agencies for the tracing of crime guns; and collect and analyze trace data, out-of-business records, reports of firearms stolen or lost from the inventories of licensees or interstate shipments, and multiple sales reports contained in the Firearms Tracing System (FTS), under 18 U.S.C. chapter 44;

(g) Establish, maintain and operate an Explosives Training and Research Facility to train Federal, State, and local law enforcement officers to investigate bombings and explosions, properly handle, utilize, and dispose of explosives materials and devices, train canines as explosives detection canines, and conduct research on explosives, as authorized by section 1114 of the Homeland Security Act of 2002;

(h) Pay awards for information or assistance and pay for the purchase of evidence or information as authorized by 28 U.S.C. 524;

(i) Subject to applicable statutory restrictions on the disclosure of records of information:

(1) Release information obtained by the Bureau and Bureau investigative reports to Federal, State, and local officials engaged in the enforcement of laws related to alcohol, tobacco, arson, firearms, and explosives offenses;

(2) Release information obtained by Bureau and Bureau investigative reports to Federal, State, and local prosecutors, and State licensing boards, engaged in the institution and prosecution of cases before courts and licensing boards related to alcohol, tobacco, arson, firearms and explosives offenses;

(3) Authorize the testimony of Bureau officials in response to subpoenas or demands issued by the prosecution in Federal, State, or local criminal cases involving offenses under the jurisdiction of the Bureau; and

(4) Except as provided in paragraph (i)(1) of this section, authorize all other production of information or testimony of Bureau officials in response to subpoenas or demands of courts or other authorities as governed by subpart B of part 16 of this chapter.

§ 0.132 Delegation respecting claims against the Bureau of Alcohol, Tobacco, Firearms, and Explosives.

(a) The Director of the Bureau of Alcohol, Tobacco, Firearms, and Explosives is authorized to exercise the power and authority vested in the Attorney General under 28 U.S.C. 2672 to consider, ascertain, adjust, determine, compromise and settle any claim thereunder not exceeding $50,000 in any one case caused by the negligent or wrongful act or omission of any employee of the Bureau of Alcohol, Tobacco, Firearms, and Explosives.

(b) The Director of the Bureau of Alcohol, Tobacco, Firearms, and Explosives is authorized to exercise the power and authority vested in the Attorney General under 31 U.S.C. 3724, with regard to claims arising out of the lawful activities of Bureau of Alcohol, Tobacco, Firearms, and Explosives personnel in an amount not to exceed $50,000 in any one case.

(c) The Director of the Bureau of Alcohol, Tobacco, Firearms, and Explosives is authorized to redelegate the power and authority vested in him in paragraph (b) of this section to the Chief Counsel of the Bureau of Alcohol, Tobacco, Firearms, and Explosives and the Chief Counsel's designee within the Office of Chief Counsel. This authority shall not be further redelegated below the Associate Chief Counsel level.

§ 0.133 Transition and continuity of regulations.

(a) Except as otherwise provided in this section, and to the extent applicable to the functions transferred to the Department of Justice by the Homeland Security Act of 2002:

(1) The regulations contained in 27 CFR part 46, subpart F (Distribution of Cigarettes), part 47 (Importation of Arms, Ammunition and Implements of

War), part 55 (Commerce in Explosives), part 178 (Commerce in Firearms and Ammunition), and part 179 (Machine Guns, Destructive Devices, and Certain Other Firearms) as in effect on January 23, 2003 (*see* 27 CFR chapter I, revised as of July 1, 2002), shall continue in effect with respect to the operations of the Bureau of Alcohol, Tobacco, Firearms, and Explosives according to their terms until amended, modified, superseded, terminated, set aside, or revoked in accordance with law.

(2) The regulations promulgated by the Department of the Treasury relating to the Bureau of Alcohol, Tobacco and Firearms, or by the Bureau of Alcohol, Tobacco and Firearms of the Department of the Treasury, in effect as of January 23, 2003, shall continue to apply to the operations of the Bureau of Alcohol, Tobacco, Firearms, and Explosives until amended, modified, superseded, terminated, set aside, or revoked in accordance with law, unless the application of such regulations would be inconsistent with statutes or regulations applicable to the Department of Justice.

(3) All orders, delegations, determinations, rules, personnel actions, permits, agreements, grants, contracts, certificates, licenses, registrations, and privileges of the Bureau of Alcohol, Tobacco and Firearms completed or in effect as of January 23, 2003, and all matters and proceedings pending therein on January 23, 2003, shall continue in effect according to their terms, to the extent that they relate to the authorities or functions transferred to the Department of Justice pursuant to the Homeland Security Act of 2002, until amended, modified, superseded, terminated, set aside, or revoked in accordance with law, unless such application would be inconsistent with statutes or regulations applicable to the Department of Justice.

(4) References in such regulations, orders, delegations, determinations, rules, personnel actions, permits, agreements, grants, contracts, certificates, licenses, registrations, and privileges to the Secretary of Treasury, the Department of Treasury, the Director of the Bureau of Alcohol, Tobacco and Firearms, or the Bureau of Alcohol, Tobacco and Firearms or its officers, employees, agents or organizational units or functions shall be deemed to refer, as appropriate, on and after January 24, 2003, to the Attorney General, the Department of Justice, the Director of the Bureau of Alcohol, Tobacco, Firearms, and Explosives, the Bureau of Alcohol, Tobacco, Firearms, and Explosives or to its officers, employees, or agents or its corresponding organizational units or functions, respectively.

(b) *Exceptions.* Notwithstanding the provisions of paragraph (a) of this section, 27 CFR part 72, and 27 CFR 46.155, 178.152 and 179.182 as in effect on January 23, 2003, shall not be deemed applicable to the Bureau of Alcohol, Tobacco, Firearms, and Explosives.

Subpart W–1—Additional Assignments of Functions and Designation of Officials To Perform the Duties of Certain Offices in Case of Vacancy, or Absence Therein or in Case of Inability or Disqualification to Act

§0.135 Functions common to heads of organizational units.

Subject to the general supervision and direction of the Attorney General, the head of each organizational unit within the Department shall:

(a) Direct and supervise the personnel, administration, and operation of the office, division, bureau, or board of which he is in charge.

(b) Under regulations prescribed by the Attorney General with the approval of the Director of the Office of Management and Budget, have authority to reallot funds allotted by the Assistant Attorney General for Administration and to redelegate to persons within his organizational unit authority and responsibility for the reallotment of such funds and control of obligations and expenditures within reallotments.

(c) Perform such special assignments as may from time to time be made to him by the Attorney General.

(d) Except as otherwise provided in this chapter, receive submittals and requests relative to the functions of his organizational unit.

[Order No. 423–69, 34 FR 20388, Dec. 31, 1969, as amended by Order No. 445–70, 35 FR 19397, Dec. 23, 1970; Order No. 960–81, 46 FR 52349, Oct. 27, 1981. Redesignated by Order No. 2650–2003, 68 FR 4926, Jan. 31, 2003]

§ 0.136 Designation of Acting United States Attorneys.

Each U.S. Attorney is authorized to designate any Assistant U.S. Attorney in his office to perform the functions and duties of the U.S. Attorney during his absence from office, or with respect to any matter from which he has recused himself, and to sign all necessary documents and papers, including indictments, as Acting U.S. Attorney while performing such functions and duties.

[Order No. 840–79, 44 FR 43468, July 25, 1979. Redesignated by Order No. 2650–2003, 68 FR 4926, Jan. 31, 2003]

§ 0.137 Designating officials to perform the functions and duties of certain offices in case of absence, disability or vacancy.

(a) In case of vacancy in the office of Attorney General, or of his absence or disability, the Deputy Attorney General shall, pursuant to 28 U.S.C. 508(a) perform the functions and duties of and act as Attorney General. When by reason of absence, disability, or vacancy in office, neither the Attorney General nor the Deputy Attorney General is available to exercise the duties of the office of Attorney General, the Associate Attorney General shall, pursuant to 28 U.S.C. 508(b), perform the functions and duties of and act as Attorney General. In the event of vacancy, absence, or disability in each of these offices, the Solicitor General shall perform the functions and duties of and act as Attorney General.

(b) Every office within the Department to which appointment is required to be made by the President with the advice and consent of the Senate (''PAS office'') shall have a First Assistant within the meaning of the Federal Vacancies Reform Act of 1998. Where there is a position of Principal Deputy to the PAS office, the Principal Deputy shall be the First Assistant. Where there is no position of Principal Deputy to the PAS office, the First Assistant shall be the person whom the Attorney General designates in writing.

(c) In the event of a vacancy in the office of the head of an organizational unit that is not covered by paragraphs (a) or (b) of this section, the ranking deputy (or an equivalent official) in such unit who is available shall perform the functions and duties of and act as such head, unless the Attorney General directs otherwise. Except as otherwise provided by law, if there is no ranking deputy available, the Attorney General shall designate another official of the Department to perform the functions and duties of and act as such head.

(d) The head of an organizational unit of the Department not covered by paragraphs (a) or (b) of this section is authorized, in the case of absence from office or disability, to designate the ranking deputy (or an equivalent official) in the unit who is available to act as head. If there is no deputy available to act, any other official in such unit may be designated. Alternatively, in his discretion, the Attorney General may designate any official in the Department to act as head when a head who is not covered by paragraphs (a) or (b) of this section is absent or disabled.

[Order No. 755–77, 42 FR 59384, Nov. 17, 1977, as amended by Order No. 1043–84, 49 FR 4469, Feb. 7, 1984; Order No. 1097–85, 50 FR 25708, June 21, 1985; Order No. 1858–94, 59 FR 13883, Mar. 24, 1994; Order No. 2205–99, 64 FR 6526, Feb. 10, 1999. Redesignated by Order No. 2650–2003, 68 FR 4926, Jan. 31, 2003]

Subpart X—Authorizations With Respect to Personnel and Certain Administrative Matters

§0.138 Federal Bureau of Investigation, Drug Enforcement Administration, Bureau of Alcohol, Tobacco, Firearms, and Explosives, Bureau of Prisons, Federal Prison Industries, Immigration and Naturalization Service, United States Marshals Service, Office of Justice Programs, Executive Office for Immigration Review, Executive Office for United States Attorneys, Executive Office for United States Trustees.

(a) The Director of the Federal Bureau of Investigation, the Administrator of the Drug Enforcement Administration, the Director of the Bureau of Alcohol, Tobacco, Firearms, and Explosives, the Director of the Bureau of Prisons, the Commissioner of Federal Prison Industries, the Commissioner of Immigration and Naturalization Service, the Director of the United States Marshals Service, the Assistant Attorney General for the Office of Justice Programs, the Director of the Executive Office for Immigration Review, the Director of the Executive Office for United States Attorneys, and the Director of the Executive Office for United States Trustees are, as to their respective jurisdictions, authorized to exercise the power and authority vested in the Attorney General by law to take final action in matters pertaining to the employment, direction, and general administration (including appointment, assignment, training, promotion, demotion, compensation, leave, awards, classification, and separation) of personnel in General Schedule grades GS–1 through GS–15 and in wage board positions, but excluding therefrom all attorney and U.S. Marshal positions. Such officials are, as to their respective jurisdictions, authorized to exercise the power and authority vested in the Attorney General by law to employ on a temporary basis experts or consultants or organizations thereof, including stenographic reporting services (5 U.S.C. 3109(b)).

(b) All personnel actions taken under this section shall be subject to post-audit and correction by the Assistant Attorney General for Administration.

[Order No. 2250–99, 64 FR 46846, Aug. 27, 1999, as amended by Order No. 2650–2003, 68 FR 4927, Jan. 31, 2003]

§0.139 [Reserved]

§0.140 Authority relating to advertisements, and purchase of certain supplies and services.

The Director of the Federal Bureau of Investigation, the Director of the Bureau of Prisons, the Commissioner of Federal Prison Industries, the Commissioner of Immigration and Naturalization, the Administrator of the Drug Enforcement Administration, the Director of the Bureau of Alcohol, Tobacco, Firearms, and Explosives, the Director of the Office of Justice Research and Statistics and the Director of the United States Marshals Service as to their respective jurisdictions, and the Assistant Attorney General for Administration, as to all other organizational units of the Department (including U.S. Attorneys), are authorized to exercise the power and authority vested in the Attorney General by law to take final action in the following-described matters:

(a) Authorizing the publication of advertisements, notices, or proposals under (44 U.S.C. 3702).

(b) Making determinations as to the acquisition of articles, materials, or supplies in accordance with sections 2 and 3 of the Buy American Act (47 Stat. 1520; 41 U.S.C. 10a, 10b).

(c) Placing orders with other agencies of the Government for materials or services, and accepting orders therefor, in accordance with section 686 of title 31 of the U.S. Code.

[Order No. 423–69, 34 FR 20388, Dec. 31, 1969, as amended by Order No. 516–73, 38 FR 12918, May 17, 1973; Order No. 520–73, 38 FR 18380, July 10, 1973; Order No. 960–81, 46 FR 52350, Oct. 27, 1981; Order No. 2650–2003, 68 FR 4927, Jan. 31, 2003]

§0.141 Audit and ledger accounts.

The Director of the Federal Bureau of Investigation, the Director of the Bureau of Prisons, the Commissioner of Immigration and Naturalization, the Administrator of the Drug Enforcement Administration, the Director of

the Bureau of Alcohol, Tobacco, Firearms, and Explosives, and the Director of the Office of Justice Assistance, Research and Statistics are, as to their respective jurisdictions, authorized to audit vouchers and to maintain general ledger accounts with respect to appropriations allotted to them.

[Order No. 423–69, 34 FR 20388, Dec. 31, 1969, as amended by Order No. 520–73, 38 FR 18380, July 10, 1973; Order No. 960–81, 46 FR 52350, Oct. 27, 1981; Order No. 2650–2003, 68 FR 4927, Jan. 31, 2003]

§ 0.142 Per diem and travel allowances.

The Director of the Federal Bureau of Investigation, Director of the Bureau of Prisons, Commissioner of Federal Prison Industries, Inc., Commissioner of Immigration and Naturalization Service, Administrator of the Drug Enforcement Administration, Director of the Bureau of Alcohol, Tobacco, Firearms, and Explosives, Director of the United States Marshals Service, and Assistant Attorney General, Office of Justice Programs, as to their respective jurisdictions, and the Assistant Attorney General for Administration as to all other organizational units of the Department (including U.S. Attorneys), except as provided in paragraphs (f) and (g) of this section, are authorized to exercise the authority of the Attorney General to take final action in the following matters:

(a) Authorizing travel, subsistence, and mileage allowances under sections 5702–5707 of title 5 of the U.S. Code in accordance with regulations prescribed by the Administrator of General Services and the Assistant Attorney General for Administration.

(b) Fixing rates in accordance with sections 5702–5704 and 5707 of title 5, U.S. Code, and regulations prescribed by the Administrator of General Services and the Assistant Attorney General for Administration.

(c) Authorizing travel advances pursuant to 5 U.S.C. 5705 in accordance with the regulations prescribed by the Administrator of General Services and the Assistant Attorney General for Administration.

(d) Authorizing travel and transportation expenses, and, when applicable, relocation expenses for transferred employees, new appointees and student trainees, in accordance with 5 U.S.C. 5721–5733 and regulations prescribed by the Administrator of General Services and the Assistant Attorney General for Administration.

(e) Authorizing or approving, for purposes of security, the use of compartments or other transportation accommodations superior to lowest first-class accommodations under applicable travel regulations subject to 5 U.S.C. 5731.

(f) The heads of Offices, Boards and Divisions, in addition to the Bureaus, have the authority to approve the use of cash in excess of $100 in lieu of Government Transportation Requests in emergency circumstances, in accordance with regulations prescribed by the Administrator of the General Services Administration.

(g) The Director of the Federal Bureau of Investigation, the Director of the Bureau of Alcohol, Tobacco, Firearms, and Explosives, and the Administrator of the Drug Enforcement Administration are authorized to approve travel expenses of newly appointed special agents and the transportation expenses of their families and household goods and personal effects from place of residence at time of selection to the first duty station, in accordance with 28 U.S.C. 530 and regulations prescribed by the Assistant Attorney General for Administration.

[Order No. 423–69, 34 FR 20388, Dec. 31, 1969, as amended by Order No. 520–73, 38 FR 18380, July 10, 1973; Order No. 565–74, 39 FR 15877, May 6, 1974; Order No. 787–78, 43 FR 22969, May 30, 1978; Order No. 800–78, 43 FR 43297, Sept. 25, 1978; Order No. 864–79, 44 FR 69927, Dec. 5, 1979; Order No. 960–81, 46 FR 52350, Oct. 27, 1981; Order No. 1093–85, 50 FR 20908, May 21, 1985; Order No. 2650–2003, 68 FR 4927, Jan. 31, 2003]

§ 0.143 Incentive Awards Plan.

The Director of the Federal Bureau of Investigation, the Director of the Bureau of Prisons, the Commissioner of Federal Prison Industries, the Commissioner of Immigration and Naturalization, the Administrator of the Drug Enforcement Administration, the Director of the Bureau of Alcohol, Tobacco, Firearms, and Explosives, the Director of the Office of Justice Assistance, Research and Statistics, the Director of the Executive Office for U.S.

Attorneys, and the Director of the U.S. Marshals Service, as to their respective jurisdictions, and the Assistant Attorney General for Administration, as to all other organizational units of the Department are authorized to exercise the power and authority vested in the Attorney General by law with respect to the administration of the Incentive Awards Plan and to approve honorary awards and cash awards under such plan not in excess of $5,000.

[Order No. 423–69, 34 FR 20388, Dec. 31, 1969, as amended by Order No. 516–73, 38 FR 12918, May 17, 1973; Order No. 520–73, 38 FR 18380, July 10, 1973; Order No. 772–78, 43 FR 14009, Apr. 4, 1978; Order No. 960–81, 46 FR 52350, Oct. 27, 1981; Order No. 2650–2003, 68 FR 4927, Jan. 31, 2003]

§0.144 Determination of basic workweek.

The Director of the Federal Bureau of Investigation, Director of the Bureau of Prisons, Commissioner of Federal Prison Industries, Inc., Commissioner of the Immigration and Naturalization Service, Administrator of the Drug Enforcement Administration, Director of the Bureau of Alcohol, Tobacco, Firearms, and Explosives, Director of the Office of Justice Assistance, Research and Statistics, Director of the Executive Office for United States Attorneys and Director of the United States Marshals Service, as to their respective jurisdictions, and the Assistant Attorney General for Administration, as to all other organizational units of the Department, are authorized to exercise the authority vested in the Attorney General by 5 U.S.C. 6101(a), to determine that the organizational unit concerned would be seriously handicapped in carrying out its functions or that costs would be substantially increased except upon modification of the basic workweek, and when such determination is made to fix the basic workweek of officers and employees of the unit concerned.

[Order No. 960–81, 46 FR 52350, Oct. 27, 1981, as amended by Order No. 2650–2003, 68 FR 4928, Jan. 31, 2003]

§0.145 Overtime pay.

The Director of the Federal Bureau of Investigation, the Director of the Bureau of Prisons, the Commissioner of Federal Prison Industries, the Commissioner of Immigration and Naturalization, the Administrator of the Drug Enforcement Administration, the Director of the Bureau of Alcohol, Tobacco, Firearms, and Explosives, the Director of the Office of Justice Assistance, Research and Statistics and the Director of the U.S. Marshals Service as to their respective jurisdictions, and the Assistant Attorney General for Administration, as to all other organizational units of the Department (including U.S. Attorneys), may, subject to any regulations which the Attorney General may prescribe, authorize overtime pay (including additional compensation in lieu of overtime of not less than 10 percent nor more than 25 percent pursuant to section 5545(c)(2) of title 5, U.S. Code) for such positions as may be designated by them.

[Order No. 423–69, 34 FR 20388, Dec. 31, 1969, as amended by Order No. 516–73, 38 FR 12918, May 17, 1973; Order No. 520–73, 38 FR 18380, July 10, 1973; Order No. 960–81, 46 FR 52350, Oct. 27, 1981; Order No. 2650–2003, 68 FR 4928, Jan. 31, 2003]

§0.146 Seals.

The Director of the Federal Bureau of Investigation, the Director of the Bureau of Prisons, the Commissioner of Federal Prison Industries, the Commissioner of Immigration and Naturalization, the Chairman of the Board of Parole, the Administrator of the Drug Enforcement Administration, the Director of the Bureau of Alcohol, Tobacco, Firearms, and Explosives, the Director of the Office of Justice Assistance, Research and Statistics, and the Director of the U.S. Marshals Service shall each have custody of the seal pertaining to his respective jurisdiction and he, or such person or persons as he may designate, may execute under seal any certification required to authenticate any books, records, papers, or other documents as true copies of official records of their respective jurisdictions. The Assistant Attorney General for Administration shall have custody of the seal of the Department of Justice, and he, or such person or persons as he may designate, may execute under seal any certification required to authenticate any books, records, papers, or other documents as true copies

of official records of the Department of Justice. He may also prescribe regulations governing the use of the seal of the Department and various organizational units.

[Order No. 423–69, 34 FR 20388, Dec. 31, 1969, as amended by Order No. 516–73, 38 FR 12918, May 17, 1973; Order No. 520–73, 38 FR 18380, July 10, 1973; Order No. 960–81, 46 FR 52350, Oct. 27, 1981; Order No. 2650–2003, 68 FR 4928, Jan. 31, 2003]

§ 0.147 Certification of obligations.

The following designated officials are authorized to make the certifications required by 31 U.S.C. 200(c): For the Federal Bureau of Investigation, the Assistant Director, Administrative Services Division; for the Bureau of Prisons, the Assistant Director for Planning and Development; for Federal Prison Industries, Inc., the Secretary; for the Immigration and Naturalization Service, the Comptroller; for the Drug Enforcement Administration, the Director of the Office of Administration and Management; for the Bureau of Alcohol, Tobacco, Firearms, and Explosives, the Assistant Director, Management; for the Office of Justice Assistance, Research and Statistics, the Comptroller; and for all other organizational units of the Department (including U.S. Attorneys and U.S. Marshals), the Deputy Assistant Attorney General, Office of the Controller, Justice Management Division.

[Order No. 972–82, 47 FR 9823, Mar. 8, 1982, as amended by Order No. 2650–2003, 68 FR 4928, Jan. 31, 2003]

§ 0.148 Certifying officers.

The Director of the Federal Bureau of Investigation, the Director of the Bureau of Prisons, the Commissioner of the Federal Prison Industries, Inc., the Commissioner of the Immigration and Naturalization Service, the Administrator of the Drug Enforcement Administration, the Director of the Bureau of Alcohol, Tobacco, Firearms, and Explosives, Assistant Attorney General for the Office of Justice Programs, the Director of the United States Marshals Service, and the Director of the Executive Office for United States Attorneys, as to their respective jurisdictions, and the Assistant Attorney General for Administration, as to all other organizational units of the Department are authorized to designate employees to certify vouchers.

[Order No. 1142–86, 51 FR 25049, July 10, 1986, as amended by Order No. 2650–2003, 68 FR 4928, Jan. 31, 2003]

§ 0.149 Cash payments.

(a) The Director of the Federal Bureau of Investigation, the Director of the Bureau of Prisons, the Commissioner of the Federal Prison Industries, Inc., the Commissioner of the Immigration and Naturalization Service, the Administrator of the Drug Enforcement Administration, the Director of the Bureau of Alcohol, Tobacco, Firearms, and Explosives, the Assistant Attorney General for the Office of Justice Programs, the Director of the United States Marshals Service, and the Director of the Executive Office for United States Attorneys, as to their respective jurisdictions, and the Assistant Attorney General for Administration, as to all other organizational units of the Department, are authorized to:

(1) Request Department of the Treasury designation of disbursing employees (including cashiers),

(2) Approve waivers of the Department of the Treasury maximum limitation on routine payments of cash from imprest funds, and

(3) Approve requests to place imprest funds in depositary cash demand withdrawal accounts and establish the maximum amount of each account.

(b) Guidelines are to be promulgated by each component for the establishment and maintenance of such accounts in accordance with the provisions set forth in the Treasury Financial Manual, Volume I, Part 4, Chapter 3000. Existing authorizations to request designations of disbursing employees shall remain in effect until terminated by the official who by this section would be authorized to request such designations.

[Order No. 1142–86, 51 FR 25049, July 10, 1986, as amended by Order No. 2650–2003, 68 FR 4928, Jan. 31, 2003]

§ 0.150 Collection of erroneous payments.

The Director of the Federal Bureau of Investigation for the FBI and the

Assistant Attorney General for Administration for all other organizational units of the Department are authorized, in accordance with the regulations prescribed by the Attorney General under section 5514(b) of title 5, U.S. Code, to collect indebtedness resulting from erroneous payments to employees.

[Order No. 634–75, 40 FR 58644, Dec. 18, 1975]

§0.151 Administering oath of office.

The Director of the Federal Bureau of Investigation, the Director of the Bureau of Prisons, the Commissioner of Federal Prison Industries, the Commissioner of Immigration and Naturalization, the Administrator of the Drug Enforcement Administration, the Director of the Bureau of Alcohol, Tobacco, Firearms, and Explosives, the Director of the Office of Justice Assistance, Research and Statistics, the Director of the Executive Office for U.S. Attorneys, and the Director of the U.S. Marshals Service, as to their respective jurisdictions, and the Assistant Attorney General for Administration, as to all other organizational units of the Department are authorized to designate, in writing, pursuant to the provisions of sections 2903(b) and 2904 of title 5, U.S. Code, officers or employees to administer the oath of office required by section 3331 of title 5, U.S. Code, and to administer any other oath required by law in connection with employment in the executive branch of the Federal Government.

[Order No. 423–69, 34 FR 20388, Dec. 31, 1969, as amended by Order No. 516–73, 38 FR 12918, May 17, 1973; Order No. 520–73, 38 FR 18380, July 10, 1973; Order No. 772–78, 43 FR 14009, Apr. 4, 1978; Order No. 960–81, 46 FR 52351, Oct. 27, 1981; Order No. 2650–2003, 68 FR 4928, Jan. 31, 2003]

§0.152 Approval of funds for attendance at meetings.

The Director of the Federal Bureau of Investigation, the Director of the Bureau of Prisons, the Commissioner of Immigration and Naturalization, the Administrator of the Drug Enforcement Administration, the Director of the Bureau of Alcohol, Tobacco, Firearms, and Explosives, and the Director of the Office of Justice Assistance, Research and Statistics, as to their respective jurisdictions, and the Assistant Attorney General for Administration, as to all other organizational units of the Department (including U.S. Attorneys and Marshals), are authorized to exercise the power and authority vested in the Attorney General by law to prescribe regulations for the expenditure of appropriated funds available for expenses of attendance at meetings of organizations.

[Order No. 423–69, 34 FR 20388, Dec. 31, 1969, as amended by Order No. 520–73, 38 FR 18380, July 10, 1973; Order No. 960–81, 46 FR 52351, Oct. 27, 1981; Order No. 2650–2003, 68 FR 4928, Jan. 31, 2003]

§0.153 Selection and assignment of employees for training.

The Director of the Federal Bureau of Investigation, the Director of the Bureau of Prisons, the Commissioner of Federal Prison Industries, Inc., the Commissioner of the Immigration and Naturalization Service, the Administrator of the Drug Enforcement Administration, the Director of the Bureau of Alcohol, Tobacco, Firearms, and Explosives, the Director of the Office of Justice Assistance, Research and Statistics, the Director of the Executive Office for United States Attorneys and the Director of the United States Marshals Service, as to their respective jurisdictions, and the Assistant Attorney General for Administration, as to all other organizational units of the Department, are hereby authorized to exercise the authority vested in the Attorney General by 5 U.S.C. 4109, with respect to the selection and assignment of employees for training by, in, or through Government facilities and the payment or reimbursement of expenses for such training.

[Order No. 960–81, 46 FR 52351, Oct. 27, 1981, as amended by Order No. 2650–2003, 68 FR 4928, Jan. 31, 2003]

§0.154 Advance and evacuation payments and special allowances.

The Director of the Federal Bureau of Investigation, the Director of the Bureau of Prisons, the Commissioner of Federal Prison Industries, the Commissioner of Immigration and Naturalization, the Administrator of the Drug

Enforcement Administration, the Director of the Bureau of Alcohol, Tobacco, Firearms, and Explosives, the Director of the United States Marshals Service, and the Director of the Office of Justice Assistance, Research and Statistics, as to their respective jurisdictions, and the Assistant Attorney General for Administration, as to all other organizational units of the Department (including U.S. Attorneys), are hereby authorized to exercise the authority vested in the Attorney General by sections 5522–5527 of title 5, U.S. Code, and Executive Order 10982 of December 25, 1961, and to administer the regulations adopted by the Attorney General in Order No. 269–62 with respect to advance and evacuation payments and special allowances.

[Order No. 423–69, 34 FR 20388, Dec. 31, 1969, as amended by Order No. 520–73, 38 FR 18380, July 10, 1973; Order No. 565–74, 39 FR 15877, May 6, 1974; Order No. 960–81, 46 FR 52351, Oct. 27, 1981; Order No. 2650–2003, 68 FR 4928, Jan. 31, 2003]

§ 0.155 Waiver of claims for erroneous payments of pay and allowances.

The Director of the Federal Bureau of Investigation, the Director of the Bureau of Prisons, the Commissioner of Federal Prison Industries, the Commissioner of Immigration and Naturalization, the Administrator of the Drug Enforcement Administration, the Director of the Bureau of Alcohol, Tobacco, Firearms, and Explosives, and the Director of the Office of Justice Assistance, Research and Statistics, as to their respective jurisdictions, and the Assistant Attorney General for Administration as to all other organizational units of the Department (including U.S. Attorneys and Marshals) are authorized to exercise the authority under 5 U.S.C. 5584 for the waiver of claims of the United States for erroneous payments of pay and allowances to employees of the Department of Justice.

[Order No. 514–73, 38 FR 12110, May 17, 1973, as amended by Order No. 520–73, 38 FR 18380, July 10, 1973; Order No. 960–81, 46 FR 52351, Oct. 27, 1981; Order No. 2650–2003, 68 FR 4928, Jan. 31, 2003; Order No. 2735–2004, 69 FR 57640, Sept. 27, 2004]

§ 0.156 Execution of U.S. Marshals' deeds or transfers of title.

A chief deputy or deputy U.S. Marshal who sells property—real, personal, or mixed—on behalf of a U.S. Marshal, may execute a deed or transfer of title to the purchaser on behalf of and in the name of the U.S. Marshal.

§ 0.157 Federal Bureau of Investigation—Drug Enforcement Administration Senior Executive Service.

(a) Pursuant to 5 U.S.C. 3151, there is established a personnel system for senior personnel within the Federal Bureau of Investigation (FBI) and the Drug Enforcement Administration (DEA) to be known as the FBI-DEA Senior Executive Service (FBI-DEA SES).

(b) Pursuant to 5 U.S.C. 3151(b)(2)(B), a career employee in the civil service is one who occupies, or who within the last 5 years occupied, a permanent position in the competitive service, a career-type permanent position in the excepted service, or a permanent position in the SES while serving under a career appointment. A career-type permanent position in the excepted service does not include:

(1) A Schedule C position authorized under 5 CFR 213.3301;

(2) A position that meets the same criteria as a Schedule C position; and

(3) A position where the incumbent is traditionally removed upon a change in Presidential Administration.

(c) Except as to the position of Deputy Director of the FBI (which remains subject to the exclusive authority of the Attorney General), the FBI-DEA SES is subject to the overall supervision and direction of the Deputy Attorney General, who shall ensure that the FBI-DEA SES is designed and administered in compliance with all statutory and regulatory requirements.

(d) The Attorney General retains the authority to recommend members of the FBI-DEA SES for Presidential Rank Awards.

[Order No. 1600–92, 57 FR 31314, July 15, 1992, as amended by Order No. 1975–95, 60 FR 35335, July 7, 1995; Order No. 2250–99, 64 FR 46846, Aug. 27, 1999]

§0.158 [Reserved]

§0.159 Redelegation of authority.

Except as to the authority delegated by §0.147, the authority conferred by this subpart X upon heads of organizational units may be redelegated by them, respectively, to any of their subordinates. Existing delegations of authority to officers and employees and to U.S. Attorneys, not inconsistent with this subpart X, made by any officer named in this section or by the Assistant Attorney General for Administration, shall continue in force and effect until modified or revoked.

[Order No. 543–73, 38 FR 29587, Oct. 26, 1973]

Subpart Y—Authority To Compromise and Close Civil Claims and Responsibility for Judgments, Fines, Penalties, and Forfeitures

§0.160 Offers that may be accepted by Assistant Attorneys General.

(a) Subject to the limitations set forth in paragraph (c) of this section, Assistant Attorneys General are authorized, with respect to matters assigned to their respective divisions, to:

(1) Accept offers in compromise of claims asserted by the United States in all cases in which the difference between the gross amount of the original claim and the proposed settlement does not exceed $2,000,000 or 15 percent of the original claim, whichever is greater;

(2) Accept offers in compromise of, or settle administratively, claims against the United States in all cases in which the principal amount of the proposed settlement does not exceed $2,000,000; and

(3) Accept offers in compromise in all nonmonetary cases.

(b) Subject to the limitations set forth in paragraph (c) of this section, the Assistant Attorney General, Tax Division, is further authorized to accept offers in compromise of, or settle administratively, claims against the United States, regardless of the amount of the proposed settlement, in all cases in which the Joint Committee on Taxation has indicated that it has no adverse criticism of the proposed settlement.

(c) Any proposed settlement, regardless of amount or circumstances, must be referred to the Deputy Attorney General or the Associate Attorney General, as appropriate:

(1) When, for any reason, the compromise of a particular claim would, as a practical matter, control or adversely influence the disposition of other claims and the compromise of all the claims taken together would exceed the authority delegated by paragraph (a) of this section; or

(2) When the Assistant Attorney General concerned is of the opinion that because of a question of law or policy presented, or because of opposition to the proposed settlement by a department or agency involved, or for any other reason, the proposed settlement should receive the personal attention of the Deputy Attorney General or the Associate Attorney General, as appropriate;

(3) When the proposed settlement converts into a mandatory duty the otherwise discretionary authority of a department or agency to promulgate, revise, or rescind regulations;

(4) When the proposed settlement commits a department or agency to expend funds that Congress has not appropriated and that have not been budgeted for the action in question, or commits a department or agency to seek particular appropriation or budget authorization; or

(5) When the proposed settlement otherwise limits the discretion of a department or agency to make policy or managerial decisions committed to the department or agency by Congress or by the Constitution.

[Order No. 1958–95, 60 FR 15674, Mar. 27, 1995]

§0.161 Acceptance of certain offers by the Deputy Attorney General or Associate Attorney General, as appropriate.

(a) In all cases in which the acceptance of a proposed offer in compromise would exceed the authority delegated by §0.160, the Assistant Attorney General concerned shall, when he is of the opinion that the proposed offer should

be accepted, transmit his recommendation to that effect to the Deputy Attorney General or the Associate Attorney General, as appropriate.

(b) The Deputy Attorney General or the Associate Attorney General, as appropriate, is authorized to exercise the settlement authority of the Attorney General as to all claims asserted by or against the United States.

[Order No. 1958–95, 60 FR 15675, Mar. 27, 1995]

§ 0.162 Offers which may be rejected by Assistant Attorneys General.

Each Assistant Attorney General is authorized, with respect to matters assigned to his division or office, to reject offers in compromise of any claims in behalf of the United States, or, in compromises or administrative actions to settle, against the United States, except in those cases which come under § 0.160(c)(2).

[Order No. 423–69, 34 FR 20388, Dec. 31, 1969, as amended by Order No. 445–70, 35 FR 19397, Dec. 23, 1970; Order No. 960–81, 46 FR 52352, Oct. 27, 1981]

§ 0.163 Approval by Solicitor General of action on compromise offers in certain cases.

In any Supreme Court case the acceptance, recommendation of acceptance, or rejection, under § 0.160, § 0.161, or § 0.162, of a compromise offer by the Assistant Attorney General concerned, shall have the approval of the Solicitor General. In any case in which the Solicitor General has authorized an appeal to any other court, a compromise offer, or any other action, which would terminate the appeal, shall be accepted or acted upon by the Assistant Attorney General concerned only upon advice from the Solicitor General that the principles of law involved do not require appellate review in that case.

§ 0.164 Civil claims that may be closed by Assistant Attorneys General.

Assistant Attorneys General are authorized, with respect to matters assigned to their respective divisions, to close (other than by compromise or by entry of judgment) claims asserted by the United States in all cases in which they would have authority to accept offers in compromise of such claims under § 0.160(a), except:

(a) When for any reason, the closing of a particular claim would, as a practical matter, control or adversely influence the disposition of other claims and the closing of all the claims taken together would exceed the authority delegated by this section; or

(b) When the Assistant Attorney General concerned is of the opinion that because of a question of law or policy presented, or because of opposition to the proposed closing by the department or agency involved, or for any other reason, the proposed closing should receive the personal attention of the Attorney General, the Deputy Attorney General or the Associate Attorney General, as appropriate.

[Order No. 1958–95, 60 FR 15675, Mar. 27, 1995]

§ 0.165 Recommendations to the Deputy Attorney General or Associate Attorney General, as appropriate, that certain claims be closed.

In all cases in which the closing of a claim asserted by the United States would exceed the authority delegated by §§ 0.160(a) and 0.164, the Assistant Attorney General concerned shall, when he is of the opinion that the claim should be closed, transmit his recommendation to that effect, together with a report on the matter, to the Deputy Attorney General or the Associate Attorney General, as appropriate, for review and final action. Such report shall be in such form as the Deputy Attorney General or the Associate Attorney General may require.

[Order No. 1958–95, 60 FR 15675, Mar. 27, 1995]

§ 0.166 Memorandum pertaining to closed claim.

In each case in which a claim is closed under § 0.164 the Assistant Attorney General concerned shall execute and place in the file pertaining to the claim a memorandum which shall contain a description of the claim and a full statement of the reasons for closing it.

§ 0.167 Submission to Associate Attorney General by Director of Office of Alien Property of certain proposed allowances and disallowances.

In addition to the matters which he is required to submit to the Associate

Attorney General under preceding sections of this subpart Y, the Director of the Office of Alien Property, shall submit to the Associate Attorney General for such review as he may desire to make the following:

(a) Any proposed allowance by the Director, without hearing, of a title or debt claim.

(b) Any final determination of a title of debt claim, whether by allowance or disallowance.

(c) Any proposed allowance or disallowance by the Director, without hearing, of a title claim under section 9(a) of the Trading with the Enemy Act, as amended, filed less than 2 years after the date of vesting in or transfer to the Alien Property Custodian or the Attorney General of the property or interest in respect of which the claim is made:

Provided, That any such title or debt claim is within one of the following-described categories.

(1) Any title claim which involves the return of assets having a value of $50,000 or more, or any debt claim in the amount of $50,000 or more.

(2) Any title claim which will, as a practical matter, control the disposition of related title claims involving, with the principal claim, assets having a value of $50,000 or more; or any debt claim which will, as a practical matter, control the disposition of related debt claims in the aggregate amount, including the principal claim, of $50,000 or more.

(3) Any title claim or debt claim presenting a novel question of law or a question of policy which, in the opinion of the Director, should receive the personal attention of the Associate Attorney General or the Attorney General.

(d) Any sale or other disposition of vested property involving assets of $50,000 or more.

[Order No. 423–69, 34 FR 20388, Dec. 31, 1969, as amended by Order No. 445–70, 35 FR 19397, Dec. 23, 1970; Order No. 543–73, 38 FR 29587, Oct. 26, 1973; Order No. 568–74, 39 FR 18646, May 29, 1974; Order No. 699–77, 42 FR 15315, Mar. 21, 1977; Order No. 960–81, 46 FR 52352, Oct. 27, 1981]

§0.168 Redelegation by Assistant Attorneys General.

(a) Assistant Attorneys General are authorized, with respect to matters assigned to their respective divisions, to redelegate to subordinate division officials and United States Attorneys any of the authority delegated by §§0.160 (a) and (b), 0.162, 0.164, and 0.172(b), except that any disagreement between a United States Attorney or other Department attorney and a client agency over a proposed settlement that cannot be resolved below the Assistant Attorney General level must be presented to the Assistant Attorney General for resolution.

(b) Redelegations of authority under this section shall be in writing and shall be approved by the Deputy Attorney General or the Associate Attorney General, as appropriate, before taking effect.

(c) Existing delegations and redelegations of authority to subordinate division officials and United States Attorneys to compromise or close civil claims shall continue in effect until modified or revoked by the respective Assistant Attorneys General.

(d) Subject to the limitations set forth in §0.160(c) and paragraph (a) of this section, redelegations by the Assistant Attorneys General to United States Attorneys may include the authority to:

(1) Accept offers in compromise of claims asserted by the United States in all cases in which the gross amount of the original claim does not exceed $5,000,000 and in which the difference between the original claim and the proposed settlement does not exceed $1,000,000; and

(2) Accept offers in compromise of, or settle administratively, claims against the United States in all cases in which the principal amount of the proposed settlement does not exceed $1,000,000.

[Order No. 1958–95, 60 FR 15675, Mar. 27, 1995]

§0.169 Definition of "gross amount of the original claim".

(a) The phrase *gross amount of the original claim* as used in this subpart Y and as applied to any civil fraud claim described in §0.45(d), shall mean the amount of single damages involved.

(b) The phrase *gross amount of the original claim* as used in this subpart Y and as applied to any civil claim brought under section 592 of the Tariff Act of 1930, as amended (see § 0.45(c)), shall mean the actual amount of lost customs duties involved. In nonrevenue loss cases brought under section 592 of the Tariff Act of 1930, as amended, the phrase *gross amount of the original claim* shall mean the amount demanded in the Customs Service's mitigation decision issued pursuant to 19 U.S.C. 1618 or, if no mitigation decision has been issued, the *gross amount of the original claim* shall mean twenty percent of the dutiable value of the merchandise.

[Order No. 2343–2000, 65 FR 78414, Dec. 15, 2000]

§ 0.170 Interest on monetary limits.

In computing the gross amount of the original claim and the amount of the proposed settlement pursuant to this subpart Y, accrued interest shall be excluded.

§ 0.171 Judgments, fines, penalties, and forfeitures.

(a) Each United States Attorney shall be responsible for conducting, handling, or supervising such litigation or other actions as may be appropriate to accomplish the satisfaction, collection, or recovery of judgments, fines, penalties, and forfeitures (including bail bond forfeitures) imposed in his district, unless the Assistant Attorney General, or his delegate, of the litigating division which has jurisdiction of the case in which such judgment, fine, penalty or forfeiture is imposed notifies the United States Attorney in writing that the division will assume such enforcement responsibilities.

(b) Each U.S. Attorney shall designate an Assistant U.S. Attorney, and such other employees as may be necessary, or shall establish an appropriate unit within his office, to be responsible for activities related to the satisfaction, collection, or recovery, as the case may be, of judgments, fines, penalties, and forfeitures (including bail-bond forfeitures).

(c) The Director of the Executive Office for United States Attorneys shall be responsible for the establishment of policy and procedures and other appropriate action to accomplish the satisfaction, collection, or recovery of fines, special assessments, penalties, interest, bail bond forfeitures, restitution, and court costs arising from the prosecution of criminal cases by the Department of Justice and the United States Attorneys. He shall also prepare regulations required by 18 U.S.C. 3613(c), pertaining to the application of tax lien provisions to criminal fines, for issuance by the Attorney General.

(d) The United States Attorney for the judicial district in which a criminal monetary penalty has been imposed is authorized to receive all notifications of payment, certified copies of judgments or orders, and notifications of change of address pertaining to an unpaid fine, which are otherwise required to be delivered to the Attorney General pursuant to 18 U.S.C. 3612. If an Assistant Attorney General of a litigating division has notified the United States Attorney, pursuant to paragraph (a) of this section that such division will assume responsibility for enforcement of a criminal monetary penalty, the United States Attorney shall promptly transmit such notifications and certified copies of judgments or orders to such division.

(e) With respect to cases assigned to his office, each United States Attorney—

(1) Shall be responsible for collection of any unpaid fine with respect to which a certification has been issued as provided in 18 U.S.C. 3612(b);

(2) Shall provide notification of delinquency or default of any fine as provided in 18 U.S.C. 3612 (d) and (e);

(3) May waive all or any part of any interest or penalty relating to a fine imposed under any prior law if, as determined by such United States Attorney, reasonable efforts to collect the interest or penalty are not likely to be effective; and

(4) Is authorized to accept delivery of the amount or property due as restitution for transfer to the victim or person eligible under 18 U.S.C. 3663 (or under 18 U.S.C. 3579 (f)(4) with respect to offenses committed prior to November 1, 1987).

(f) With respect to offenses committed after December 31, 1984, and prior to November 1, 1987, each United

States Attorney is authorized with respect to cases assigned to his office—

(1) At his discretion, to declare the entire unpaid balance of a fine or penalty payable immediately in accordance with 18 U.S.C. 3565(b)(3);

(2) If a fine or penalty exceeds $500, to receive a certified copy of the judgment, otherwise required to be delivered by the clerk of the court to the Attorney General;

(3) When a fine or penalty is satisfied as provided by law,

(i) To file with the court a notice of satisfaction of judgment if the defendant makes a written request to the United States Attorney for such filing; or,

(ii) If the amount of the fine or penalty exceeds $500 to enter into a written agreement with the defendant to extend the twenty-year period of obligation to pay fine.

(g) With respect to offenses committed prior to November 1, 1987, each United States Attorney is hereby authorized, with respect to the discharge of indigent prisoners under 18 U.S.C. 3569, to make a finding as to whether the retention by a convict of property, in excess of that which is by law exempt from being taken on civil process for debt, is reasonably necessary for the convict's support or that of his family.

(h) The Director of the Bureau of Prisons shall take such steps as may be necessary to assure that the appropriate U.S. Attorney is notified whenever a prisoner is released prior to the payment of his fine.

(i) The Pardon Attorney shall notify the appropriate U.S. Attorney whenever the President issues a pardon and whenever the President remits or commutes a fine.

[Order No. 423–69, 34 FR 20388, Dec. 31, 1969, as amended by Order No. 445–70, 35 FR 19397, Dec. 23, 1970; Order No. 699–77, 42 FR 15315, Mar. 21, 1977; Order No. 960–81, 46 FR 52352, Oct. 27, 1981; Order No. 1034–83, 48 FR 50714, Nov. 3, 1983; Order No. 1413–90, 55 FR 19064, May 8, 1990]

§ 0.172 Authority: Federal tort claims.

(a) The Director of the Bureau of Prisons, the Commissioner of Federal Prison Industries, the Commissioner of the Immigration and Naturalization Service, the Director of the United States Marshals Service, and the Administrator of the Drug Enforcement Administration shall have authority to adjust, determine, compromise, and settle a claim involving the Bureau of Prisons, Federal Prison Industries, the Immigration and Naturalization Service, the United States Marshals Service, and the Drug Enforcement Administration, respectively, under section 2672 of title 28, United States Code, relating to the administrative settlement of Federal tort claims, if the amount of a proposed adjustment, compromise, settlement, or award does not exceed $50,000. When, in the opinion of one of those officials, such a claim pending before him presents a novel question of law or a question of policy, he shall obtain the advice of the Assistant Attorney General in charge of the Civil Division before taking action on the claim.

(b) Subject to the provisions of § 0.160, the assistant Attorney General in charge of the Civil Division shall have authority to adjust, determine, compromise, and settle any other claim involving the Department under section 2672, of title 28, U.S. Code, relating to the administrative settlement of Federal tort claims.

[Order No. 423–69, 34 FR 20388, Dec. 31, 1969, as amended by Order No. 520–73, 38 FR 18381, July 10, 1973; Order No. 565–74, 39 FR 15877, May 6, 1974; Order No. 1149–86, 51 FR 31940, Sept. 8, 1986; Order No. 1528–91, 56 FR 48734, Sept. 26, 1991; Order No. 2328–2000, 65 FR 60100, Oct. 10, 2000]

APPENDIX TO SUBPART Y OF PART 0—REDELEGATIONS OF AUTHORITY TO COMPROMISE AND CLOSE CIVIL CLAIMS

CIVIL DIVISION

[Memo No. 374]

EDITORIAL NOTE: Civil Division, Memorandum No. 374 was superseded by Civil Division, Directive No. 110–78, appearing at 43 FR 38820, Aug. 31, 1978.

[Directive No. 18–71]

EDITORIAL NOTE: Civil Division, Directive No. 18–71 was superseded by Civil Division, Directive No. 110–78, appearing at 43 FR 38820, Aug. 31, 1978.

[Directive No. 31–72]

EDITORIAL NOTE: Civil Division, Directive No. 31–72 was superseded by Civil Division, Directive No. 110–78, appearing at 43 FR 38820, Aug. 31, 1978.

[Directive No. 110–78]

EDITORIAL NOTE: Civil Division, Directive No. 110–78 was superseded by Civil Division, Directive No. 145–81, appearing at 46 FR 52353, Oct. 27, 1981.

[Directive No. 145–81]

EDITORIAL NOTE: Civil Division, Directive No. 145–81 was removed by Civil Division, Directive No. 163–86, appearing at 53 FR 4010, Feb. 11, 1988.

REDELEGATION OF AUTHORITY, TO BRANCH DIRECTORS, HEADS OF OFFICES AND UNITED STATES ATTORNEYS IN CIVIL DIVISION CASES

[Directive No. 14–95]

By virtue of the authority vested in me by part 0 of title 28 of the Code of Federal Regulations, particularly §§0.45, 0.160, 0.164, and 0.168, it is hereby ordered as follows:

Section 1. Authority To Compromise or Close Cases and To File Suits and Claims

(a) Delegation to Deputy Assistant Attorneys General. The Deputy Assistant Attorneys General are authorized to act for, and to exercise the authority of, the Assistant Attorney General in charge of the Civil Division with respect to the institution of suits, the acceptance or rejection of compromise offers, and the closing of claims or cases, unless any such authority is required by law to be exercised by the Assistant Attorney General personally or has been specifically delegated to another Department official.

(b) Delegation to United States Attorneys, Branch, Office and Staff Directors and Attorneys-in-Charge of Field Offices. Subject to the limitations imposed by 28 CFR 0.160(c), and 0.164(a) and section 4(c) of this directive, and the authority of the Solicitor General set forth in 28 CFR 0.163,

(1) Branch, Office, and Staff Directors, and Attorneys-in-Charge of Field Offices with respect to matters assigned or delegated to their respective components are hereby delegated the authority to:

(a) Accept offers in compromise of claims on behalf of the United States;

(i) In all cases in which the gross amount of the original claim did not exceed $500,000; and,

(ii) In all cases in which the gross amount of the original claim was between $500,000 and $5,000,000, so long as the difference between the gross amount of the original claim and the proposed settlement does not exceed $500,000 or 15 percent of the original claim, whichever is greater;

(b) Accept offers in compromise of, or settle administratively, claims against the United States in all cases where the principal amount of the proposed settlement does not exceed $500,000; and,

(c) Reject any offers.

(2) United States Attorneys with respect to matters assigned or delegated to their respective components are hereby delegated the authority to:

(a) Accept offers in compromise of claims on behalf of the United States;

(i) In all cases in which the gross amount of the original claim did not exceed $1,000,000 and,

(ii) In all cases in which the gross amount of the original claim does not exceed $5,000,000, and in which the difference between the gross amount of the original claim and the proposed settlement does not exceed $1,000,000;

(b) Accept offers in compromise of, or settle administratively, claims against the United States in all cases where the principal amount of the proposed settlement does not exceed $1,000,000 and,

(c) Reject any offers.

(3) With respect to claims asserted in bankruptcy proceedings, the term *gross amount of the original claim* in (1) (a) and (b), and (2) (a) and (b) above means liquidation value. *Liquidation value* is the forced sale value of the collateral, if any, securing the claim(s) plus the dividend likely to be paid for the unsecured portion of the claim(s) in an actual or hypothetical liquidation of the bankruptcy estate.

(c) Subject to the limitations imposed by sections 1(e) and 4(c) of this directive, United States Attorneys, Directors, and Attorneys-in-Charge are authorized to file suits, counterclaims, and cross-claims, to close, or to take any other action necessary to protect the interests of the United States in all routine nonmonetary cases, in all routine loan collection and foreclosure cases, and in other monetary claims or cases where the gross amount of the original claim does not exceed $500,000, or in the case of United States Attorneys, $1,000,000. Such actions in nonmonetary cases which are other than routine will be submitted for the approval of the Assistant Attorney General, Civil Division.

(d) United States Attorneys may redelegate in writing the above-conferred compromise and suit authority to Assistant United States Attorneys who supervise other Assistant United States Attorneys who handle civil litigation.

(e) Limitations on delegations. The authority to compromise cases, file suits, counterclaims, and cross-claims, to close cases, or take any other action necessary to protect the interests of the United States, delegated

by paragraphs (a) and (b) of this section, may not be exercised, and the matter shall be submitted for resolution to the Assistant Attorney General, Civil Division, when:

(1) For any reason, the proposed action, as a practical matter, will control or adversely influence the disposition of other claims totaling more than the respective amounts designated in the above paragraphs.

(2) Because a novel question of law or a question of policy is presented, or for any other reason, the proposed action should, in the opinion of the officer or employee concerned, receive the personal attention of the Assistant Attorney General, Civil Division.

(3) The agency or agencies involved are opposed to the proposed action. The views of an agency must be solicited with respect to any significant proposed action if it is a party, if it has asked to be consulted with respect to any such proposed action, or if such proposed action in a case would adversely affect any of its policies.

(4) The U.S. Attorney involved is opposed to the proposed action and requests that the matter be submitted to the Assistant Attorney General for decision.

(5) The case is on appeal, except as determined by the Director of the Appellate Staff.

Section 2. Action Memoranda

(a) Whenever an official of the Civil Division or a United States Attorney accepts a compromise, closes a claim or files a suit or claim pursuant to the authority delegated by this Directive, a memorandum fully explaining the basis for the action taken shall be executed and placed in the file. In the case of matters compromised, closed, or filed by United States Attorneys, a copy of the memorandum must be sent to the appropriate Branch or Office of the Civil Division.

(b) The compromising of cases or closing of claims or the filing of suits for claims, which a United States Attorney is not authorized to approve, shall be referred to the appropriate Branch or Office within the Civil Division, for decision by the Assistant Attorney General or the appropriate authorized person within the Civil Division. The referral memorandum should contain a detailed description of the matter, the United States Attorney's recommendation, the agency's recommendation where applicable, and a full statement of the reasons therefor.

Section 3. Return of Civil Judgment Cases to Agencies

Claims arising out of judgments in favor of the United States which cannot be permanently closed as uncollectable may be returned to the referring Federal agency for servicing and surveillance whenever all conditions set forth in USAM 4–2.230 have been met.

Section 4. Authority for Direct Reference and Delegation of Civil Division Cases to United States Attorneys

(a) Direct reference to United States Attorneys by agencies. The following civil actions under the jurisdiction of the Assistant Attorney General, Civil Division, may be referred by the agency concerned directly to the appropriate United States Attorney for handling in trial courts, subject to the limitations imposed by paragraph (c) of this section. United States Attorneys are hereby delegated the authority to take all necessary steps to protect the interests of the United States, without prior approval of the Assistant Attorney General, Civil Division, or his representations, subject to the limitations set forth in section 1(e) of this directive. Agencies may, however, if special handling is desired, refer these cases to the Civil Division. Also, when constitutional questions or other significant issues arise in the course of such litigation, or when an appeal is taken by any party, the Civil Division should be consulted.

(1) Money claims by the United States, except claims involving penalties and forfeitures, where the gross amount of the original claim does not exceed $1,000,000.

(2) Single family dwelling house foreclosures arising out of loans made or insured by the Department of Housing and Urban Development, the Veterans Administration and the Farmers Home Administration.

(3) Suits to enjoin violations of, and to collect penalties under, the Agricultural Adjustment Act of 1938, 7 U.S.C. 1376, the Packers and Stockyards Act, 7 U.S.C. 203, 207(g), 213, 215, 216, 222, and 228a, the Perishable Agricultural Commodities Act, 1930, 7 U.S.C. 499c(a) and 499h(d), the Egg Products Inspection Act, 21 U.S.C. 1031 *et seq.*, the Potato Research and Promotion Act, 7 U.S.C. 2611 *et seq.*, the Cotton Research and Promotion Act of 1966, 7 U.S.C. 2101 *et seq.*, the Federal Meat Inspection Act, 21 U.S.C. 601 *et seq.*, and the Agricultural Marketing Agreement Act of 1937, as amended, 7 U.S.C. 601 *et seq*.

(4) Suits by social security beneficiaries under the Social Security Act, 42 U.S.C. 402 *et seq*.

(5) Social Security disability suits under 42 U.S.C. 423 *et seq*.

(6) Black lung beneficiary suits under the Federal Coal Mine Health and Safety Act of 1969, 30 U.S.C. 921 *et seq*.

(7) Suits by Medicare beneficiaries under 42 U.S.C. 1395ff.

(8) Garnishment actions authorized by 42 U.S.C. 659 for child support or alimony payments and actions for general debt, 5 U.S.C. 5520a.

(9) Judicial review of actions of the Secretary of Agriculture under the food stamp program, pursuant to the provisions of 7 U.S.C. 2022 involving retail food stores.

(10) Cases referred by the Department of Labor for the collection of penalties or for injunctive action under the Fair Labor Standards Act of 1938 and the Occupational Safety and Health Act of 1970.

(11) Cases referred by the Department of Labor solely for the collection of civil penalties under the Farm Labor Contractor Registration Act of 1963, 7 U.S.C. 2048(b).

(12) Cases referred by the Interstate Commerce Commission to enforce orders of the Interstate Commerce Commission or to enjoin or suspend such orders pursuant to 28 U.S.C. 1336.

(13) Cases referred by the United States Postal Service for injunctive relief under the nonmailable matter laws, 39 U.S.C. 3001 *et seq*.

(b) Delegation to United States Attorneys. Upon the recommendation of the appropriate Director, the Assistant Attorney General, Civil Division may delegate to United States Attorneys suit authority involving any claims or suits where the gross amount of the original claim does not exceed $5,000,000 where the circumstances warrant such delegations. United States Attorneys may compromise any case redelegated under this subsection in which the gross amount of the original claim does not exceed $5,000,000, so long as the difference between the gross amount of the original claim and the proposed settlement does not exceed $1,000,000. United States Attorneys may close cases redelegated to them under this subsection only upon the authorization of the appropriate authorized person within the Department of Justice. All delegations pursuant to this subsection shall be in writing and no United States Attorney shall have authority to compromise or close any such delegated case or claim except as is specified in the required written delegation or in section 1(c) of this directive. The limitations of section 1(e) of this directive also remain applicable in any case or claim delegated hereunder.

(c) Cases not covered. Regardless of the amount in controversy, the following matters normally will not be delegated to United States Attorneys for handling but will be personally or jointly handled or monitored by the appropriate Branch or Office within the Civil Division:

(1) Civil actions in the Court of Federal Claims.

(2) Cases within the jurisdiction of the Commercial Litigation Branch involving patents, trademarks, copyrights, etc.

(3) Cases before the United States Court of International Trade.

(4) Any case involving bribery, conflict of interest, breach of fiduciary duty, breach of employment contract, or exploitation of public office.

(5) Any fraud or False Claims Act case where the amount of single damages, plus civil penalties, if any, exceeds $1,000,000.

(6) Any case involving vessel-caused pollution in navigable waters.

(7) Cases on appeal, except as determined by the Director of the Appellate Staff.

(8) Any case involving litigation in a foreign court.

(9) Criminal proceedings arising under statutes enforced by the Food and Drug Administration, the Consumer Product Safety Commission, the Federal Trade Commission, and the National Highway Traffic Safety Administration (relating to odometer tampering), except as determined by the Director of the Office of Consumer Litigation.

(10) Nonmonetary civil cases, including injunction suits, declaratory judgment actions, and applications for inspection warrants, and cases seeking civil penalties including but not limited to those arising under statutes enforced by the Food and Drug Administration, the Consumer Product Safety Commission, the Federal Trade Commission, and the National Highway Traffic Safety Administration (relating to odometer tampering), except as determined by the Director of the Office of Consumer Litigation.

(11) Administrative claims arising under the Federal Tort Claims Act.

Section 5. Adverse Decisions

All final judicial decisions adverse to the Government involving any direct reference or delegated case must be reported promptly to the Assistant Attorney General, Civil Division, attention Director, Appellate Staff. Consult title 2 of the United States Attorney's Manual for procedures and time limitations. An appeal cannot be taken without approval of the Solicitor General. Until the Solicitor General has made a decision whether an appeal will be taken, the Government attorney handling the case must take all necessary procedural actions to preserve the Government's right to take an appeal, including filing a protective notice of appeal when the time to file a notice of appeal is about to expire and the Solicitor General has not yet made a decision. Nothing in the foregoing directive affects this obligation.

Section 6. Supersession

This directive supersedes Civil Division Directive No. 176–91 regarding redelegation of the Assistant Attorney General's authority in Civil Division cases to Branch Directors, heads of offices and United States Attorneys.

Section 7. Applicability

This directive applies to all cases pending as of the date of this directive and is effective immediately.

[60 FR 17457, Apr. 6, 1995]

CRIMINAL DIVISION

[Memo No. 375]

STANDARDS AND PROCEDURES WITH RESPECT TO CRIMINAL PROSECUTIONS INVOLVING CERTAIN AGRICULTURAL MARKETING QUOTA PENALTY CASES

By virtue of the authority vested in me by part 0 of title 28 of the Code of Federal Regulations, particularly §§0.55, 0.160, 0.162, 0.164, 0.166, and 0.168, it is hereby ordered as follows:

SECTION 1. *Purpose*. The purpose of this Memorandum is to prescribe standards and procedures for U.S. Attorneys with respect to the handling of the criminal aspects of agricultural marketing quota penalty cases which are submitted to the U.S. Attorneys by direct referral from the attorney in charge of the local office of the General Counsel of the Department of Agriculture (hereinafter in this Memorandum referred to as the General Counsel). Supplement No. 1 of October 26, 1955, to Memorandum No. 119 is hereby superseded. Attention is invited to the fact that Memorandum No. 374, of June 3, 1964, which superseded Memorandum No. 119 of December 8, 1954, deals with the civil aspects of agricultural marketing quota penalty cases.

SEC. 2. *Scope of authority*. (a) The authority conferred by this Memorandum is applicable to alleged criminal violations involving the provisions of the Agricultural Adjustment Act of 1938, as amended (7 U.S.C. 1311–1376), in cases in which the gross amount involved does not exceed $5,000.

(b) Matters involving alleged criminal violations of the Agricultural Adjustment Act of 1938, as amended, shall be referred directly to the U.S. Attorney concerned by the attorney in charge of the local office of the General Counsel which has jurisdiction over any such matter requiring action. U.S. Attorneys may initiate criminal prosecution or decline to do so as they, in their judgment, may deem appropriate. U.S. Attorneys are, of course, urged to obtain the advice and assistance of this Department whenever they feel that such advice and assistance might be helpful.

SEC. 3. *Correspondence*—(a) *With the Department of Justice*. Inquiries to the Department concerning any matters covered by this Memorandum should be directed to the attention of the Assistant Attorney General in charge of the Criminal Division (hereinafter in this Memorandum referred to as the Assistant Attorney General). Any such inquiry should be accompanied by copies of all pertinent correspondence and other documents, including the indictment if one shall have been returned, since files concerning these matters will not be maintained in Washington.

(b) *With the Department of Agriculture*. Correspondence calling for additional factual details, and requests for investigations, documents, witnesses, and similar matters, should be directed to the General Counsel's attorney in charge who originated the matter. However, only the U.S. Attorney and his duly appointed assistants are authorized to exercise any control whatsoever over the handling of any such matter referred to the U.S. Attorney for action. The U.S. Attorney is charged with the entire responsibility for the manner in which such matters are handled.

SEC. 4. *Closing of the Prosecution*. (a) U.S. Attorneys may decline to prosecute any case involving a matter covered by this Memorandum without prior consultation or approval of the Assistant Attorney General. If, however, prosecution has been initiated by way of indictment or information, the indictment or information shall not be dismissed until authority to do so has been obtained from the Assistant Attorney General or his representative unless the reason for the dismissal is one which does not necessitate the prior approval of the Criminal Division. (See U.S. Attorneys' Manual, title 2: Criminal Division, pages 18–20.)

(b) In each instance in which a case is closed by a U.S. Attorney and in which prior approval of the Assistant Attorney General or his representative has not been obtained, a memorandum shall be prepared and placed in the file describing the action taken and the reasons therefor.

SEC. 5. *Appeals*. The instructions existing with reference to criminal appeals shall govern appeals in cases covered by this Memorandum.

[29 FR 7423, June 9, 1964]

[Directive No. 1]

EDITORIAL NOTE: Criminal Division, Directive No. 1, was superseded by Criminal Division, Directive No. 2, appearing at 43 FR 50677, Oct. 31, 1978.

[Directive No. 2]

EDITORIAL NOTE: Criminal Division, Directive No. 2, was superseded by Criminal Division, Directive No. 116, appearing at 48 FR 50713, Nov. 3, 1983.

[Attorney General Order No. 1598–92]

REDELEGATIONS OF AUTHORITY TO UNITED STATES ATTORNEYS, DEPUTY ASSISTANT ATTORNEYS GENERAL, SECTION CHIEFS, AND DIRECTOR, ASSET FORFEITURE OFFICE, IN THE CRIMINAL DIVISION

By virtue of the authority vested in me by part 0 of title 28 of the Code of Federal Regulations, as amended, particularly §§0.160,

0.162, 0.164, 0.168 and 0.171, it is hereby ordered as follows:

(a)(1) Each U.S. Attorney is authorized in cases delegated to the Assistant Attorney General of the Criminal Division—

(A) To accept or reject offers in compromise of—

(i) Claims in behalf of the United States in all cases (other than forfeiture cases) in which the original claim did not exceed $500,000, and in all cases in which the original claim was between $500,000 and $5,000,000, so long as the difference between the gross amount of the original claim and the proposed settlement does not exceed 15 percent of the original claim; and in all civil or criminal forfeiture cases, except that the U.S. Attorney shall consult with the Asset Forfeiture Office of the Criminal Division before accepting offers in compromise or plea offers in forfeiture cases in which the orignial claim was $5,000,000 or more, and in forfeiture cases in which the original claim was between $500,000 and $5,000,000, when the difference between the gross amount of the original forfeiture sought and the proposed settlement exceeds 15 percent of the original claim; and

(ii) Claims against the United States in all cases, or in administrative actions to settle, in which the amount of the proposed settlement does not exceed $500,000; and

(B) To close (other than by compromise or entry of judgment) claims asserted by the United States in all cases (other than forfeiture cases) in which the gross amount of the original claim does not exceed $500,000, and in all civil or criminal forfeiture cases, except that the U.S. Attorney shall consult with the Asset Forfeiture Office of the Criminal Division before closing a forfeiture case in which the gross amount of the original forfeiture sought is $500,000 or more.

(2) This subsection does not apply—

(A) When, for any reason, the compromise or closing of a particular claim (other than a forfeiture case) will, as a practical matter, control or adversely influence the disposition of other claims, which, when added to the claim in question, total more than the respective amounts designated above;

(B) When the U.S. Attorney is of the opinion that because of a question of law or policy presented, or for any other reason, the matter should receive the personal attention of the Assistant Attorney General;

(C) When a settlement converts into a mandatory duty the otherwise discretionary authority of an agency or department to revise, amend, or promulgate regulations;

(D) When a settlement commits a department or agency to expend funds that Congress has not appropriated and that have not been budgeted for the action in question, or commits a department or agency to seek a particular appropriation or budget authorization; or

(E) When a settlement limits the discretion of a Secretary or agency administrator to make policy or managerial decisions committed to the Secretary or agency administrator by Congress or by the Constitution.

(b) Notwithstanding the provisions of this Order, the Assistant Attorney General of the Criminal Division may delegate to U.S. Attorneys authority to compromise or close other cases, including those involving amounts greater than as set forth in paragraph (a) above, and up to the maximum limit of his authority, where the circumstances warrant such delegation.

(c) All other authority delegated to me by §§ 0.160, 0.162, 0.164 and 0.171 of title 28 of the Code of Federal Regulations not falling within the limitations of paragraph (a) of this Order is hereby redelegated to Section Chiefs in the Criminal Division, except that—

(1) The authority delegated to me by §§ 0.160, 0.162, 0.164 and 0.171 of that title relating to conducting, handling, or supervising civil and criminal forfeiture litigation (other than bail bond forfeiture), including acceptance or denial of petitions for remission or mitigation of forfeiture, is hereby redelegated to the Director of the Asset Forfeiture Office; and

(2) When a Section Chief or the Director of the Asset Forfeiture Office is of the opinion that because of a question of law or policy presented, or for any other reason, a matter described in paragraph (c) should receive the personal attention of a Deputy Assistant Attorney General or Assistant Attorney General, he shall refer the matter to the appropriate Deputy Assistant Attorney General or to the Assistant Attorney General.

(d) Notwithstanding any of the above redelegations, when the agency or agencies involved have objected in writing to the proposed closing or dismissal of a case, or to the acceptance or rejection of an offer in compromise, any such unresolved objection shall be referred to the Assistant Attorney General for resolution.

[Order No. 1598–92, 57 FR 30396, July 9, 1992]

LAND AND NATURAL RESOURCES DIVISION

[Memo. No. 388]

EDITORIAL NOTE: Land and Natural Resources Division, Memo No. 388, was superseded by Land and Natural Resources Division, Directive No. 7–76, appearing at 41 FR 53660, Dec. 8, 1976.

[Directive No. 4–72]

EDITORIAL NOTE: Land and Natural Resources Division, Directive No. 4–72, was superseded by Land and Natural Resources Division, Directive No. 7–76, appearing at 41 FR 53660, Dec. 8, 1976.

[Directive No. 5–72]

EDITORIAL NOTE: Land and Natural Resources Division, Directive No. 5–72, was superseded by Land and Natural Resources Division, Directive No. 7–76, appearing at 41 FR 53660, Dec. 8, 1976.

[Directive No. 7–76]

REDELEGATION OF AUTHORITY TO INITIATE AND TO COMPROMISE LAND AND NATURAL RESOURCES DIVISION CASES

This directive supersedes Land and Natural Resources Memorandum No. 388 (appendix to subpart Y) and Directives Nos. 4–72 and 5–72. By virtue of the authority vested in me by part 0 of title 28 of the Code of Federal Regulations, and particularly §§0.65, 0.160, 0.162, 0.164, 0.166, and 0.168 thereof, I hereby redelegate to the Deputy Assistant Attorney General, certain Section Chiefs, and to the United States Attorneys, the following authority to act in connection with, and to compromise, Land and Natural Resources Division cases:

SECTION I—AUTHORITY TO INITIATE CASES

A. *Delegation to United States Attorneys*—1. *Land Cases*. United States Attorneys are hereby authorized to act in matters concerning real property of the United States, including tribal and restricted individual Indian land, not involving new or unusual questions or questions of title or water rights, on behalf of any other department or agency in response to a direct request in writing from an authorized field officer of the department or agency concerned, without prior authorization from the Land and Natural Resources Division, in the following-described cases:

(a) Actions to recover possession of property from tenants, squatters, trespassers, or others, and actions to enjoin trespasses on Federal property;

(b) Actions to recover damages resulting from trespasses when the amount of the claim for actual damage based upon an innocent trespass does not exceed $200,000 (The United States Attorneys may seek recovery of amounts exceeding $200,000 (i) if the actual damages are $200,000 or less and State statutes permit the recovery of multiple damages, e.g., double or treble, for either a willful or an innocent trespass; or (ii) if the actual damages are $200,000 or less, but the action is for conversion to obtain recovery of the enhanced value of property severed and removed in the trespass);

(c) Actions to collect delinquent rentals or damages for use and occupancy of not more than $200,000;

(d) Actions to collect costs of forest fire suppression and other damages resulting from such fires if the total claim does not exceed $200,000;

(e) Actions to collect delinquent operation and maintenance charges accruing on Indian irrigation projects and federal reclamation projects of not more than $200,000; and

(f) Actions to collect loans of money or livestock made by the United States to individual Indians without limitation on amount, including loans made by Indian tribal organizations to individual Indians if the loan agreements, notes and securities have been assigned by the tribal organizations to the United States.

2. *Environmental cases*. Pursuant to paragraph 10 of the memorandum of understanding between the Department of Justice and the Environmental Protection Agency (42 FR 48942) with respect to the handling of litigation to which the Environmental Protection Agency is a party, all requests of the Environmental Protection Agency for litigation must be submitted by the Agency through its General Counsel or its Assistant Administrator for Enforcement to the Assistant Attorney General, except that matters requiring an immediate temporary restraining order may be submitted by regional Administrators of the Environmental Protection Agency simultaneously to a U.S. Attorney and the Assistant Attorney General. Consequently, except for matters requiring an immediate temporary restraining order, U.S. Attorneys are not authorized to accept on a direct reference basis any matters or cases originating in any office of the Environmental Protection Agency.

U.S. Attorneys are authorized to act, without prior authorization from the Land and Natural Resources Division, on behalf of Federal departments or agencies other than the Environmental Protection Agency, in response to a direct request in writing from an authorized field officer of the department or agency concerned, in the following environmental cases:

(a) Civil or criminal actions involving the filling or the deposit of dredged or fill material upon, or the alteration of the channels of, the waters of the United States, in violation of section 10 of the River and Harbor Act of March 3, 1899 (33 U.S.C. 403), or of section 404 of the Federal Water Pollution Control Act Amendments of 1972 (33 U.S.C. 1344), or of both statutes;

(b) Civil or criminal actions involving the discharge of refuse into the navigable waters of the United States, and, in certain cases, their tributaries, in violation of section 13 of the Act of March 3, 1899 (33 U.S.C. 407), except for

(i) In rem actions against vessels, which actions shall continue to be handled in the manner set forth in departmental memorandums 374 and 376, dated June 3, 1964, and shall continue to be under the jurisdiction of the Civil Division; and

(ii) Criminal actions involving the discharge either of oil or of hazardous substances, for which discharge a government agency either has imposed a civil penalty pursuant to section 311(b)(6) of the Federal Water Pollution Control Act Amendments of 1972 (33 U.S.C. 1321(b)(6)), or has under consideration the imposition of such a penalty.

3. *Notification to Division of Direct Referral.* In each case referred to the United States Attorneys pursuant to the authority set forth in Subparagraphs 1 and 2 above, the United States Attorney shall, prior to taking action, assure that a copy of the authorized field officer's written request has been forwarded to the Assistant Attorney General, Land and Natural Resources Division, Department of Justice, Washington, DC, 20530.

SECTION II—AUTHORITY TO COMPROMISE, DISMISS, OR CLOSE CASES

A. *Delegation to Deputy Assistant Attorney General.* Subject to the limitations imposed by Paragraph D of this Section, the Deputy Assistant Attorney General in the Land and Natural Resources Division is hereby authorized, with respect to matters assigned to the Land and Natural Resources Division, to accept or reject offers in compromise of claims against the United States in which the amount of the proposed settlement does not exceed $500,000, and of claims in behalf of the United States in which the gross amount of the original claim does not exceed $500,000.

B. *Delegation to Section Chiefs.* Subject to the limitations imposed by Paragraph D of this Section, the Chiefs of the Land Acquisition, Indian Claims, Pollution Control, Indian Resources, and General Litigation Sections of the Land and Natural Resources Division are hereby authorized, with respect to matters assigned to their respective sections, to accept or reject offers in compromise of claims against the United States in which the amount of the proposed settlement does not exceed $300,000, and of claims in behalf of the United States in which the gross amount of the original claim does not exceed $300,000.

C. *Delegations to United States Attorneys*—1. *Compromise of land cases.* Subject to the limitations imposed by paragraph D of this section, U.S. Attorneys are authorized, without the prior approval of the Land and Natural Resources Division, to accept or reject offers in compromise in the direct referral land cases listed in subparagraph A–1 of section I, and in claims against the United States in which the amount of the proposed settlement does not exceed $200,000, if the authorized field officer of the interested agency concurs in writing, except that where the United States is a plaintiff, a U.S. Attorney may accept an offer without the concurrence of the field officer if the acceptance is based solely upon the financial circumstances of the debtor.

2. *Compromise of environmental cases.* Prior delegations of authority to the U.S. Attorneys to settle any type of case in which the Department of Justice represents the Environmental Protection Agency, or the Administrator or any other official of that Agency, are hereby revoked; all offers in compromise of such cases shall be submitted to the Assistant Attorney General of the Land and Natural Resources Division, for appropriate action.

3. *Compromise of Condemnation Cases.* (a) Subject to the limitations imposed in Paragraph D of this section, United States Attorneys are hereby authorized, without the prior approval of the Land and Natural Resources Division, to accept or reject offers in compromise of claims against the United States for just compensation in condemnation proceedings in any case in which

(i) The gross amount of the proposed settlement does not exceed $100,000; and

(ii) The settlement is approved in writing (the written approval to be retained in the file of the United States Attorney concerned) by the authorized field representative of the acquiring agency if the amount of the settlement exceeds the amount deposited with the declaration of taking as to the particular tract of land involved; and

(iii) The amount of the settlement is compatible with the sound appraisal, or appraisals, upon which the United States would rely as evidence in the event of trial, due regard being had for probable minimum trial costs and risks; and

(iv) The case does not involve the revestment of any land or improvements or any interest, or interests, in land under the Act of October 21, 1942, 56 Stat. 797 (40 U.S.C. 258f).

3(b). When a United States Attorney has settled a condemnation proceeding under the authority conferred upon him by the foregoing subparagraph, he shall promptly secure the entry of judgment and distribution of the award, and shall take all other steps necessary to dispose of the matter completely. The United States Attorney concerned shall also immediately forward to the Department a report, in the form of a letter or memorandum, bearing his signature or showing his personal approval, stating the action taken and containing an adequate statement of the reasons therefor. In routine cases, a form, containing the minimum elements of the required report, may be used in lieu of a letter or memorandum. In any case, special care shall be taken to see that the report contains a statement as to what the valuation testimony of the United States would have been if the case had been tried.

4. *Closing or Dismissal of Matters and Cases.* Subject to the limitations imposed in Paragraph D of this section, a direct referral matter described in Section I may be closed without action by the United States Attorney or, if filed in court, may be dismissed by

him, if the field officer of the interested agency concurs in writing that it is without merit legally or factually. Except for claims on behalf of Indians or Indian tribes, the United States Attorney may close a claim without consulting the field officer of the interested agency if the claim is for money only and if he concludes (a) that the cost of collection under the circumstances would exceed the amount of the claim, or (b) that the claim is uncollectable. With respect to claims asserted by the United States on behalf of individual Indians or Indian tribes, the United States Attorney may close a claim without consulting the field officer of the interested agency if the claim is for money only and if he concludes that the claim is uncollectable; claims on behalf of Indian individuals and tribes may not be closed merely because the cost of collection might exceed the amount of the claim.

D. *Limitations on delegations.* The authority to compromise, close or dismiss cases delegated by Paragraphs A, B and C of this section may not be exercised when,

(a) For any reason, the compromise of a particular claim, as a practical matter, will control or adversely influence the disposition of other claims totaling more than the respective amounts designated above;

(b) Because a novel question of law or a question of policy is presented, or for any other reason, the offer should, in the opinion of the officer or employee concerned, receive the personal attention of the Assistant Attorney General in charge of the Land and Natural Resources Division; and

(c) The agency or agencies involved are opposed to the proposed closing or dismissal of a case, or acceptance or rejection of the offer in compromise.

If any of the conditions listed above exist, the matter shall be submitted for resolution to the Assistant Attorney General in charge of the Land and Natural Resources Division.

Effective date of this directive. This Directive shall be effective on December 8, 1976.

[41 FR 53660, Dec. 8, 1976, as amended at 43 FR 36069, Aug. 15, 1978; 51 FR 12848, Apr. 16, 1986]

[Directive No. 90–50]

REDELEGATION OF AUTHORITY TO INITIATE AND TO COMPROMISE ENVIRONMENT AND NATURAL RESOURCES DIVISION CASES

Pursuant to the authority vested in me by title 28 of the Code of Federal Regulations, and particularly §§0.65, 0.65(a), 0.160, 0.162, 0.164, 0.166, 0.168 and 50.7 thereof, I hereby redelegate to the Section Chief of the Environmental Enforcement Section, the following authority to initiate and to compromise Environment and Natural Resources Division cases and to approve FEDERAL REGISTER Notices describing settlements of actions to enjoin discharges of pollutants into the environment.

Authority To Initiate Cases

The Section Chief of the Environmental Enforcement Section is hereby authorized to initiate civil actions on behalf of any other department or agency in response to a written request from an authorized official of the department or agency concerned, under the following environmental statutes:

1. Cases under section 14 of the Federal Insecticide, Fungicide, and Rodenticide Act, 7 U.S.C. 136*l*(a), section 16 of the Toxic Substances Control Act, 15 U.S.C. 2615(a) and section 309(g)(9) of the Clean Water Act, 33 U.S.C. 309(g)(9), for collection of civil penalties previously assessed by the Environmental Protection Agency in a formal administrative proceeding.

2. Cases under sections 112 and 113 of the Clean Air Act, 42 U.S.C. 7412 and 7413 for violations of the national emission standards for asbestos hazardous air pollutants.

3. Cases under section 311 of the Clean Water Act, 33 U.S.C. 1321, for recovery of costs expended by the United States' to remove oil or hazardous substances discharged into or upon the navigable waters of the United States, adjoining shorelines, or into or upon the waters of the contiguous zone where such costs do not exceed $1 million, exclusive of interest.

4. Cases under section 104(e) of the Comprehensive Environmental Response, Compensation and Liability Act, 42 U.S.C. 9604(e) to enforce requests for access to information, entry and/or inspection and samples.

5. Cases under section 107 of the Comprehensive Environmental Response, Compensation and Liability Act, 42 U.S.C. 9607, for recovery of costs of removal or remedial action incurred by the United States where such costs do not exceed $1 million, exclusive of interest.

Any case initiation under paragraphs 1–5 above, should be referred to the Assistant Attorney General, Environment and Natural Resources Division, for approval, whenever the Section Chief of the Environmental Enforcement Section is of the opinion that because of a question of law or policy presented, or for any other reason, the matter should receive the attention of the Assistant Attorney General, Environment and Natural Resources Division.

Authority To Compromise Cases

The Section Chief of the Environmental Enforcement Section is hereby authorized to compromise civil claims on behalf of the United States under the following environmental statutes:

1. Cases under section 14 of the Federal Insecticide, Fungicide, and Rodenticide Act, 7

U.S.C. 136*l*(a), section 16 of the Toxic Substances Control Act, 15 U.S.C. 2615(a) and section 309(g)(9) of the Clean Water Act, 33 U.S.C. 309(g)(9), for collection of civil penalties previously assessed by the Environmental Protection Agency in a formal administrative proceeding.

2. Cases under sections 112 and 113 of the Clean Air Act, 42 U.S.C. 7412 and 7413 for violations of the national emission standards for asbestos hazardous air pollutants.

3. Cases under the Safe Drinking Water Act, 42 U.S.C. 300(f) *et seq.*, the Resource Conservation and Recovery Act, 42 U.S.C. 6901 *et seq.*, the Clean Air Act, 42 U.S.C. 7401 *et seq.*, the Clean Water Act, 33 U.S.C. 1251 *et seq.*, the Federal Insecticide, Fungicide and Rodenticide Act, 7 U.S.C. 136 *et seq.*, and the Toxic Substances Control Act, 15 U.S.C. 2601 *et seq.*, where the amount of the civil penalty to be paid to the United States does not exceed $100,000.

4. Cases under section 311 of the Clean Water Act, 33 U.S.C. 1321, for recovery of costs expended by the United States to remove oil or hazardous substances discharged into or upon the navigable waters of the United States, adjoining shorelines, or into or upon the waters of the contiguous zone, where such costs do not exceed $1 million, exclusive of interest, and the difference between the United States' claim and the proposed settlement does not exceed $500,000.

5. Cases under section 104(e) of the Comprehensive Environmental Response, Compensation and Liability Act, 42 U.S.C. 9604(e), to enforce requests for access to information, entry and/or inspection and samples.

6. Cases under section 107 of the Comprehensive Environmental Response, Compensation and Liability Act, 42 U.S.C. 9607, for recovery of costs of removal or remedial action incurred by the United States, where such costs do not exceed $1 million, exclusive of interest, and the difference between the United States' claim and the proposed settlement does not exceed $500,000.

Any settlement under paragraphs 4 and 6 above, regardless of the amount or circumstances, should be referred to the Assistant Attorney General, Environment and Natural Resources Division, when for any reason, the compromise of a particular claim, as a practical matter, will control or adversely influence the disposition of other claims totaling more than $500,000. In addition, any settlement under paragraphs 1–6 above should be referred to the Assistant Attorney General, Environment and Natural Resources Division, whenever the Section Chief of the Environmental Enforcement Section is of the opinion that because of a question of law or policy presented, or because of opposition to the proposed settlement by the agency or agencies involved, or for any other reason, the offer should receive the personal attention of the Assistant Attorney General, Environment and Natural Resources Division.

Authority To Approve Federal Register Notices

The Section Chief of the Environmental Enforcement Section is hereby authorized to approve all FEDERAL REGISTER Notices under 28 CFR 50.7 and to transmit those notices to the Assistant Attorney General, Office of Legal Counsel, for publication.

Authority of Persons Acting in the Capacity of the Section Chief, Environmental Enforcement Section

In the event that another person is acting in the capacity of the Section Chief, Environmental Enforcement Section, that person will have the authority to initiate and to compromise cases under these delegations only if specifically authorized in writing by the Assistant Attorney General, Environment and Natural Resources Division.

Date of Delegations

This Directive shall be effective December 24, 1990, and the United States Attorneys' Manual will be revised accordingly.

[Order No. 50–90, 55 52839, Dec. 24, 1990]

[Directive 1–86]

Pursuant to the authority vested in me under 28 CFR §16.4(b) and §16.42(b), I delegate to the Deputy Assistant Attorney General who supervises the Policy, Legislation and Special Litigation Section, or to whoever is acting in that capacity, the authority to grant to deny any request for a record of the Land and Natural Resources Division made pursuant to the Freedom of Information Act, 5 U.S.C. 552, or the Privacy Act of 1974, 5 U.S.C. 552a.

Effective Date: January 9, 1986.

[51 FR 12849, Apr. 16, 1986]

[Directive 6–85]

DELEGATION OF AUTHORITY TO CHIEF, LAND ACQUISITION SECTION, TO STIPULATE OR AGREE IN BEHALF OF THE UNITED STATES TO EXCLUDE PROPERTY TAKEN ON BEHALF OF THE UNITED STATES BY DECLARATION OF TAKING OR OTHERWISE

Section 258f of the Declaration of Taking Act, 40 U.S.C. 258a, *et seq.*, contains the following provision:

In any condemnation proceeding instituted by or on behalf of the United States, the Attorney General is authorized to stipulate or agree in behalf of the United States to exclude any property or any part thereof, or any interest therein, that may have been, or may be, taken by or on behalf of the United States by declaration of taking or otherwise.

The foregoing authority has been delegated to the Assistant Attorney General, Land and

Natural Resources Division, by the Attorney General, chapter I, part O, subpart M, §§0.65 and 0.160(a)(2), title 28, Code of Federal Regulations.

In view of the frequency of agency requests that this office stipulate or agree to exclude property or parts of property taken by declaration of taking or otherwise, and in the interest of efficient administration of the duties and responsibilities of this office, I hereby make the following limited delegation of authority to stipulate or agree to such exclusions (revestments).

The Chief, Land Acquisition Section, is authorized to stipulate or agree in behalf of the United States to exclude (revest) any property or any part thereof, or any interest therein, that may have been, or may be taken by or on behalf of the United States by declaration of taking or otherwise, when:

1. The exclusion (revestment) has been requested or approved in writing by a duly authorized officer of the agency for which the property was taken; and

2. In the case of a partial exclusion (revestment) in connection with an overall settlement of the case, the combined amount of the monetary payment of compensation and the government's appraised value of the land to be excluded (revested) does not exceed the monetary limitation on the Section Chief's settlement authority; or

3. In the case of an exclusion (revestment) that is not part of an overall settlement of the case, the government's appraised value of the land to be excluded (revested) together with any payment of compensation for possession and/or litigation expenses do not exceed the monetary limitations of the Section Chief's settlement authority.

Provided that the delegation of settlement authority shall not extend to any revestment which raises precedential questions or policy issues. In such instances, the decision on whether to stipulate or agree to exclusions of property shall remain with the Assistant Attorney General of the Land and Natural Resources Division.

Effective Date: February 4, 1985.

[51 FR 12849, Apr. 16, 1986]

[Directive 6–83]

By virtue of the authority vested in me by part 0 of title 28, Code of Federal Regulations §0.65, the Section Chief of the Wildlife and Marine Resources Section is now authorized to rule upon petitions for remission or mitigation of civil or criminal forfeitures filed with the Attorney General pursuant to the Endangered Species Act of 1973 (16 U.S.C. 1531–1543); the Lacey Act and related provisions (18 U.S.C. 41–44, 47); the Airborne Hunting Act (16 U.S.C. 742j–1); the Migratory Bird Act (16 U.S.C. 701, *et seq.*); the Bald and Golden Eagle Protection Act (16 U.S.C. 668–668d); the Fish and Wildlife Coordination Act (16 U.S.C. 661 *et seq.*); the National Wildlife Refuge System Administration Act (16 U.S.C. 668dd, 668ee); the Magnuson Fishery Conservation and Management Act (16 U.S.C. 1801 *et seq.*); the Tuna Conventions Act (16 U.S.C. 951 *et seq.*); the Marine Mammal Protection Act (16 U.S.C. 1361 *et seq.*,) the Sockeye Salmon or Pink Salmon Fishing Act (16 U.S.C. 776 *et seq.*); the Protection of Sea Otters on the High Seas Act (16 U.S.C. 1171 *et seq.*); the Northern Pacific Halibut Act (16 U.S.C. 772 *et seq.*); and the North Pacific Fisheries Act (16 U.S.C. 1021 *et seq.*).

The Section Chief of the Wildlife and Marine Resources Section shall base his decision upon a review of all the pertinent facts including the petition for remission or mitigation, the report and recommendation of the appropriate United States Attorney, the report of the seizing law enforcement agency, and the report prepared within the Section.

Following the adverse decision a petitioner may request the Assistant Attorney General for the Land and Natural Resources Division to review the decision of the Section Chief.

The above directive shall be effective immediately and shall be the interim procedure in effect until promulgation of regulations by the Department of Justice which address the remission and mitigation process in the Land and Natural Resources Division.

Effective Date: April 12, 1983.

[51 FR 12849, Apr. 16, 1986]

[Directive 6–81]

This directive establishes the Division's policy of notice to appropriate state officials of action against states. The Chief of each section in the Land and Natural Resources Division shall:

1. Insure that each attorney in his or her respective section reads, becomes familiar with, and complies with this directive.

2. In each suit or claim brought against state government, agencies, and entities;

(a) Satisfy the Deputy Assistant Attorney General to whom the section reports of compliance with this directive,

(b) Before such suit or claim is brought, advise the Attorney General and governor of any affected state as to the nature of the contemplated action and the terms of the remedy sought and

(c) Place a memorandum in the file of the case of matter, indicating compliance with this directive.

Such prior notice may:

(1) Result in settlement of the action in advance of its filing on terms acceptable to the United States,

(2) Permit the state to bring to our attention facts or issues that may change our outlook on the action, or

(3) Permit the State Attorney General and the Governor to respond knowledgeably to

inquires from local officials and the media when the action is commenced.

Because the actual situation covered by this directive may vary from section to section, no single detailed procedure can be established but common sense should prevail. To that end, the state through its Attorney General and Governor should get fair warning and an opportunity to resolve the litigation. The notice should be given sufficiently in advance of the contemplated action to allow state officials to respond.

Where a Section Chief believes he has good cause to seek an exception from the terms of this directive he should discuss the matter with the Deputy Assistant Attorney General to whom he or she reports.

Effective Date: April 27, 1981.

[51 FR 12849, Apr. 16, 1986]

TAX DIVISION

[Directive No. 27]

EDITORIAL NOTE: Tax Division, Directive No. 27, was superseded by Tax Division, Directive No. 28, appearing at 41 FR 53005, Dec. 3, 1976.

[Directive No. 28]

EDITORIAL NOTE: Tax Division, Directive No. 28, was superseded by Tax Division, Directive No. 31, appearing at 43 FR 36438, Aug. 17, 1978.

[Memo No. 391]

EDITORIAL NOTE: Tax Division Memo No. 391 was superseded by Tax Division Directive No. 29.

[Directive No. 29]

EDITORIAL NOTE: Tax Division, Directive No. 29 was superseded by Tax Division, Directive No. 30, appearing at 43 FR 36438, Aug. 17, 1978.

[Directive No. 30]

EDITORIAL NOTE: Tax Division, Directive No. 30 was superseded by Tax Division, Directive No. 55, appearing at 51 FR 16841, May 7, 1986.

[Directive No. 31]

EDITORIAL NOTE: Tax Division, Directive No. 31 was superseded by Tax Division, Directive No. 36, appearing at 45 FR 20799, Mar. 31, 1980.

[Directive No. 36]

EDITORIAL NOTE: Tax Division, Directive No. 36 was superseded by Tax Division, Directive No. 40, appearing at 45 FR 81201, Dec. 10, 1980 and redesignated as Directive No. 41 appearing at 46 FR 52352, Oct. 27, 1981.

[Directive No. 41]

EDITORIAL NOTE: Tax Division, Directive No. 41 was superseded by Tax Division, Directive No. 42, appearing at 47 FR 44254, Oct. 7, 1982.

[Directive No. 42]

EDITORIAL NOTE: Tax Division, Directive No. 42 was superseded by Tax Division, Directive No. 43, appearing at 48 FR 16674, Apr. 19, 1983.

[Directive No. 43]

EDITORIAL NOTE: Tax Division, Directive No. 43 was superseded by Tax Division, Directive No. 45, appearing at 48 FR 25183, June 6, 1983, corrected at 48 FR 28634, June 23, 1983.

[Directive No. 45]

EDITORIAL NOTE: Tax Division, Directive No. 45 was superseded by Tax Division Directive No. 47, appearing at 49 FR 12247, Mar. 29, 1984.

[Directive No. 47]

EDITORIAL NOTE: Tax Division, Directive No. 47 was superseded by Tax Division Directive No. 54, appearing at 51 FR 16842, May 7, 1986.

[Directive No. 54]

EDITORIAL NOTE: Tax Division, Directive No. 54 was superseded by Tax Division Directive No. 82, appearing at 55 FR 22901, June 5, 1990.

[Directive No. 55]

EDITORIAL NOTE: Tax Division, Directive No. 55 was superseded by Tax Division Directive No. 83, appearing at 55 FR 22902, June 5, 1990.

[Directive No. 83]

By virtue of the authority vested in me by part 0 of title 28 of the Code of Federal Regulations, particularly sections 0.70, 0.160, 0.162, 0.164, 0.166, and 0.168, it is hereby ordered as follows:

Section 1. The U.S. Attorney for each district in which is located real property, which is subject to a right of redemption of the United States in respect of Federal tax liens, arising under section 2410(c) of title 28 of the United States Code, or under State law when the United States has been joined as a party to a suit, is authorized to release the right of redemption, subject to the following limitations and conditions—

(1) This redelegation of authority relates only to real property on which is located only one single-family residence, and to all other real property having a fair market value not exceeding $200,000. That limitation as to value or use shall not apply in those cases in which the release is requested by the Department of Veterans Affairs or any other Federal agency.

(2) The consideration paid for the release must be equal to the value of the right of redemption, or fifty dollars ($50), whichever is greater. However, no consideration shall be required for releases issued to the Department of Veterans Affairs or any other Federal agency.

(3) The following described documents must be placed in the U.S. Attorney's file in each case in which a release is issued—

(A) Appraisals by two disinterested and well-qualified persons. In those cases in which the applicant is a Federal agency, the appraisal of that agency may be substituted for the two appraisals generally required.

(B) Such other information and documents as the Tax Division may prescribe.

Section 2. This directive supersedes Tax Division Directive No. 55, effective May 7, 1986.

Section 3. This directive shall become effective on the date of its publication in the FEDERAL REGISTER.

[55 FR 22902, June 5, 1990]

[DIRECTIVE NO. 105]

By virtue of the authority vested in me by part 0 of title 28 of the Code of Federal Regulations, particularly sections 0.70, 0.160, 0.162, 0.164, 0.166, and 0.168, It Is Hereby Ordered As Follows:

Section 1. The Chiefs of the Civil Trial Sections, the Court of Federal Claims Section, and the Appellate Section are authorized to reject offers in compromise, regardless of amount, provided that such action is not opposed by the agency or agencies involved.

Section 2. Subject to the conditions and limitations set forth in Section 8 hereof, the Chiefs of the Civil Trial Sections and the Court of Federal Claims Section are authorized to:

(A) Accept offers in compromise in all civil cases, other than:

(i) Cases involving liability under Section 6672 of the Internal revenue Code; and

(ii) Cases in which judgments in favor of the United States have been entered, in which the amount of the Government's concession, exclusive of statutory interest, does not exceed $300,000;

(B) Approve administrative settlements of civil claims against the United States in all cases, other than cases involving liability under Section 6672 of the Internal Revenue Code, in which the amount of the Government's concession, exclusive of statutory interest, does not exceed $200,000;

(C) Approve concessions (other than by compromise) of civil claims asserted by the United States in all cases, other than cases involving liability under Section 6672 of the Internal Revenue Code, in which the gross amount of the original claim does not exceed $200,000;

(D) In civil cases involving liability under Section 6672 of the Internal Revenue Code, (i) accept offers in compromise in which the amount of the Government's concession, exclusive of statutory interest, does not exceed $500,000; (ii) approve administrative settlements of claims against the United States in which the amount of the Government's concession, exclusive of statutory interest, does not exceed $350,000; and (iii) approve concessions (other than by compromise) of claims asserted by the United States in which the gross amount of the original claim does not exceed $350,000;

(E) Accept offers in compromise of judgments in favor of the United States in all civil cases in which the amount of the Government's concession, exclusive of statutory interest, does not exceed $500,000;

(F) Accept offers in compromise in injunction or declaratory judgment suits against the United States in which the principal amount of the related liability, if any, does not exceed $300,000; and

(G) Accept offers in compromise in all other nonmonetary cases;

provided that such action is not opposed by the agency or agencies involved, and provided further that the proposed compromise, administrative settlement, or concession is not subject to reference to the Joint Committee on Taxation.

Section 3. The Chiefs of the Civil Trial Sections and the Court of Federal Claims Section are authorized on a case-by-case basis to redelegate in writing to their respective Assistant Section Chiefs or Reviewers the authority delegated to them in Section 1 hereof to reject offers, and in Section 2 hereof,

(A) to accept offers in compromise in which the amount of the Government's concession, exclusive of statutory interest, does not exceed $100,000;

(B) to approve administrative settlements of civil claims against the United States in which the amount of the Government's concession, exclusive of statutory interest, does not exceed $100,000; and

(C) to approve concessions (other than by compromise) of civil claims asserted by the United States in which the gross amount of the original claim does not exceed $100,000;

provided that such redelegation is not made to the attorney-of-record in the case. The redelegations pursuant to this section shall be by memorandum signed by the Section Chief,

which shall be placed in the Department of Justice file for the applicable case.

Section 4. Subject to the conditions and limitations set forth in Section 8 hereof, the Chief of the Appellate Section is authorized to:

(A) Accept offers in compromise with reference to litigating hazards of the issues on appeal in all civil cases in which the amount of the Government's concession, exclusive of statutory interest, does not exceed $300,000;

(B) Accept offers in compromise in declaratory judgment suits against the United States in which the principal amount of the related liability, if any, does not exceed $300,000; and

(C) Accept offers in compromise in all other nonmonetary cases which do not involve issues concerning collectibility;

provided that (i) such acceptance is not opposed by the agency or agencies involved or the chief of the section in which the case originated, and (ii) the proposed compromise is not subject to reference to the Joint Committee on Taxation.

Section 5. Subject to the conditions and limitations set forth in Section 8 hereof, the Chief of the Office of Review is authorized to:

(A) Accept offers in compromise of claims against the United States in all civil cases in which the amount of the Government's concession, exclusive of statutory interest, does not exceed $1,500,000;

(B) Accept offers in compromise of claims on behalf of the United States in all civil cases in which the difference between the gross amount of the original claim and the proposed settlement does not exceed $1,500,000 or 15 percent of the original claim, whichever is greater;

(C) Approve administrative settlements of civil claims against the United States in all cases in which the amount of the Government's concession, exclusive of statutory interest, does not exceed $1,000,000;

(D) Approve concessions (other than by compromise) of civil claims asserted by the United States in all cases in which the gross amount of the original claim does not exceed $1,000,000;

(E) Accept offers in compromise in all nonmonetary cases; and

(F) Reject offers in compromise or disapprove administrative settlements or concessions, regardless of amount,

provided that such action is not opposed by the agency or agencies involved or the chief of the section to which the case is assigned, and provided further that the proposed compromise, administrative settlement, or concession is not subject to reference to the Joint Committee on Taxation.

Section 6. Subject to the conditions and limitations set forth in Section 8 hereof, each of the Deputy Assistant Attorneys General is authorized to:

(A) Accept offers in compromise of claims against the United States in all civil cases in which the amount of the Government's concession, exclusive of statutory interest, does not exceed $2,000,000;

(B) Accept offers in compromise of claims on behalf of the United States in all civil cases in which the difference between the gross amount of the original claim and the proposed settlement does not exceed $2,000,000 or 15 percent of the original claim, whichever is greater;

(C) Approve administrative settlements of civil claims against the United States in all cases in which the amount of the Government's concession does not exceed $1,500,000, exclusive of statutory interest;

(D) Approve concessions (other than by compromise) of civil claims asserted by the United States in all cases in which the gross amount of the original claim does not exceed $1,500,000;

(E) Accept offers in compromise in all nonmonetary cases; and

(F) Reject offers in compromise or disapprove administrative settlements or concessions, regardless of amount,

provided that such action is not opposed by the agency or agencies involved and the proposed compromise, administrative settlement, or concession is not subject to reference to the Joint Committee on Taxation.

Section 7. Subject to the conditions and limitations set forth in Section 8 hereof, United States Attorneys are authorized to:

(A) Reject offers in compromise of judgments in favor of the United States, regardless of amount;

(B) Accept offers in compromise of judgments in favor of the United States where the amount of the judgment does not exceed $300,000; and

(C) Terminate collection activity by his or her office as to judgments in favor of the United States which do not exceed $300,000 if the United States Attorney concludes that the judgment is uncollectible;

provided that such action has the concurrence in writing of the agency or agencies involved, and provided further that this authorization extends only to judgments which have been formally referred to the United States Attorney for collection.

Section 8. The authority redelegated herein shall be subject to the following conditions and limitations:

(A) When, for any reason, the compromise, administrative settlement, or concession of a particular claim, as a practical matter, will control or adversely influence the disposition of other claims totalling more than the respective amounts designated in Sections 2, 3, 4, 5, 6, and 7 hereof, the case shall be forwarded for review at the appropriate level for the cumulative amount of the affected claims;

(B) When, because of the importance of a question of law or policy presented, the position taken by the agency or agencies or by the United States Attorney involved, or any other considerations, the person otherwise authorized herein to take final action is of the opinion that the proposed disposition should be reviewed at a higher level, the case shall be forwarded for such review;

(C) If the Department has previously submitted a case to the Joint Committee on Taxation leaving one or more issues unresolved, any subsequent compromise, administrative settlement, or concession in that case must be submitted to the Joint Committee, whether or not the overpayment exceeds the amount specified in Section 6405 of the Internal Revenue Code;

(D) Nothing in this Directive shall be construed as altering any provision of subpart Y of part O of title 28 of the Code of Federal Regulations requiring the submission of certain cases to the Attorney General, the Associate Attorney General, or the Solicitor General.

(E) Authority to approve recommendations that the Government confess error or make administrative settlements in cases on appeal is excepted from the foregoing redelegations; and

(F) The Assistant Attorney General, at any time, may withdraw any authority delegated by this Directive as it relates to any particular case or category of cases, or to any part thereof.

Section 9. This Directive supersedes Tax Division Directive No. 95, effective February 21, 1992.

Section 10. This Directive is effective on June 14, 1995.

[60 FR 31244, June 14, 1995]

ATTORNEY GENERAL ORDER NO. 1147–86

By virtue of the authority vested in the Attorney General by 18 U.S.C. 2254, the Attorney General hereby designates the Postal Service with the authority to conduct civil forfeitures under section 2254 of the Protection of Children Against Sexual Exploitation Act, as amended by the Child Protection of 1984, 18 U.S.C. 2251–2255.

In utilizing the authority hereby granted, all rules, regulations, and procedures of the Federal Bureau of Investigation relating to the aforementioned Act must be followed, including the Federal Bureau of Investigation's Manual of Investigative Operations and Guidelines.

The authority hereby granted to enforce section 2254 of the Protection of Children Against Sexual Exploitation Act, as amended by the Child Protection Act of 1984, is subject to the direction of the Attorney General.

[Order No. 1148–86, 51 FR 31940, Sept. 8, 1986]

Subpart Z—Assigning Responsibility Concerning Applications for Orders Compelling Testimony or Production of Evidence by Witnesses

§0.175 Judicial and administrative proceedings.

(a) When the subject matter of a case or proceeding is within his or her respective jurisdiction, the Assistant Attorney General, Criminal Division, the Assistant Attorney General for National Security, or any Deputy Assistant Attorney General, Criminal Division or of the National Security Division is authorized to exercise the authority vested in the Attorney General by 18 U.S.C. 6003, to approve the application of a U.S. Attorney to a federal court for an order compelling testimony or the production of information by a witness in any proceeding before or ancillary to a court or grand jury of the United States, and the authority vested in the Attorney General by 18 U.S.C. 6004, to approve the issuance by an agency of the United States of an order compelling testimony or the production of information by a witness in a proceeding before the agency, when the subject matter of the case or proceeding is either within the cognizance of the Assistant Attorney General, Criminal Division, the Assistant Attorney General for National Security, or is not within the cognizance of the Divisions or Administration designated in paragraphs (b) and (c) of this section.

(b) The Assistant Attorneys General or any Deputy Assistant Attorney General of the Antitrust Division, the Civil Division, the Civil Rights Division, the Land and Natural Resources Division and the Tax Division are authorized to exercise the power and authority vested in the Attorney General by 18 U.S.C. 6003 to approve the application of a U.S. Attorney to a Federal court for an order compelling testimony or the production of information in any proceeding before or ancillary to a court or grand jury of the United States when the subject matter of the case or proceeding is within the cognizance of their respective Divisions: *Provided, however,* That no approval shall be granted unless the Criminal Division

indicates that it has no objection to the proposed grant of immunity.

(c) The Assistant Attorneys General and Deputy Assistant Attorneys General designated in paragraph (b) of this section, and the Administrator of the Drug Enforcement Administration are authorized to exercise the authority vested in the Attorney General by 18 U.S.C. 6004 to approve the issuance by an agency of the United States of an order compelling testimony or the production of information by a witness in a proceeding before the agency when the subject matter of the proceeding is within the cognizance of their respective Divisions or the Administration: *Provided, however,* That no approval shall be granted unless the Criminal Division indicates that it has no objection to the proposed grant of immunity.

[Order No. 1310–88, 54 FR 297, Jan. 5, 1989, as amended by Order No. 2865–2007, 72 FR 10068, Mar. 7, 2007]

§ 0.176 Congressional proceedings.

(a) A notice of an intention to request an order from a district court compelling testimony or the production of information in a congressional proceeding when submitted to the Attorney General by either House of Congress or a committee or a subcommittee of the Congress pursuant to 18 U.S.C. 6005 shall be referred to the Assistant Attorney General of the Division or the Administrator of the Administration having cognizance of the subject matter of the proceedings: *Provided, however,* That either the notice or a copy thereof shall in any event be referred to the Assistant Attorney General in charge of the Criminal Division.

(b) The Assistant Attorneys General and Deputy Assistant Attorneys General designated in § 0.175 (a) and (b) are authorized to exercise the power and authority vested in the Attorney General by 18 U.S.C. 6005 to apply to a district court of the United States to defer the issuance of an order compelling the testimony of a witness or the production of information in a proceeding before either House of Congress, or any committee or subcommittee of either House, or any joint committee of the two Houses.

[Order No. 445–70, 35 FR 19397, Dec. 23, 1970, as amended by Order No. 520–73, 38 FR 18381, July 10, 1973; Order No. 960–81, 46 FR 52353, Oct. 27, 1981; Order No. 1310–88, 54 FR 298, Jan. 5, 1989]

§ 0.177 Applications for orders under the Comprehensive Drug Abuse Prevention and Control Act.

Notwithstanding the delegation of functions contained in subpart R of this part, the Assistant Attorney General in charge of the Criminal Division is authorized to exercise the authority vested in the Attorney General by section 514 of the Comprehensive Drug Abuse Prevention and Control Act of 1970, 84 Stat. 1276, to approve the application of a U.S. Attorney to a Federal court for an order compelling testimony or the production of information in any proceeding before a court or grand jury of the United States. Immunity shall be granted in agency proceedings under that Act only with the concurrence of the Assistant Attorney General in charge of the Criminal Division.

[Order No. 445–70, 35 FR 19397, Dec. 23, 1970]

§ 0.177a Antitrust civil investigative demands.

The Assistant Attorney General in charge of the Antitrust Division is authorized to issue orders pursuant to section 6004 of title 18, United States Code, to compel testimony in response to antitrust civil investigative demands for oral testimony. Issuance of such orders shall be subject to the concurrence of the Assistant Attorney General in charge of the Criminal Division.

[Order No. 753–77, 42 FR 56730, Oct. 28, 1977]

§ 0.178 Redelegation of authority.

The Administrator of the Drug Enforcement Administration is authorized to redelegate the authority delegated by this subpart to the Deputy Administrator of DEA, to be exercised

solely during the absence of the Administrator from the City of Washington.

[Order No. 445–70, 35 FR 19397, Dec. 23, 1970, as amended by Order No. 520–73, 38 FR 18381, July 10, 1973; Order No. 960–81, 46 FR 52354, Oct. 27, 1981; Order No. 1310–88, 54 FR 298, Jan. 5, 1989]

Subpart Z–1—Prosecutions for Obstruction of Justice and Related Charges

§0.179 Scope.

This subpart applies to the following matters:

(a) Obstruction of justice and obstruction of a criminal investigation (18 U.S.C. 1501–1511);

(b) Perjury and subornation of perjury (18 U.S.C. 1621, 1622);

(c) False declarations before a grand jury or court (18 U.S.C. 1623);

(d) Fraud and false statements in matters within the jurisdiction of a government agency (18 U.S.C. 1001); and

(e) Conspiracy to defraud the United States (18 U.S.C. 371).

[Order No. 630–75, 40 FR 53390, Nov. 18, 1975]

§0.179a Enforcement responsibilities.

(a) Matters involving charges of obstruction of justice, perjury, fraud or false statement, as described in §0.179, shall be under the supervisory jurisdiction of the Division having responsibility for the case or matter in which the alleged obstruction occurred. The Assistant Attorney General in charge of each Division shall have full authority to conduct prosecution of such charges, including authority to appoint special attorneys to present evidence to grand juries. However, such enforcement shall be preceded by consultation with the Assistant Attorney General in charge of the Criminal Division, to determine the appropriate supervisory jurisdiction. (See 38 CFR 0.55(p).)

(b) In the event the Assistant Attorney General in charge of the Division having responsibility for the case or matter does not wish to assume supervisory jurisdiction he shall refer the matter to the Assistant Attorney General in charge of the Criminal Division for handling by that Division.

[Order No. 630–75, 40 FR 53390, Nov. 18, 1975]

Subpart AA—Orders of the Attorney General

SOURCE: Order No. 460–71, 36 FR 12096, June 25, 1971, unless otherwise noted.

§0.180 Documents designated as orders.

All documents relating to the organization of the Department or to the assignment, transfer, or delegation of authority, functions, or duties by the Attorney General or to general departmental policy shall be designated as orders and shall be issued only by the Attorney General in a separate, numbered series. Classified orders shall be identified as such, included within the numbered series, and limited to the distribution provided for in the order or determined by the Assistant Attorney General for Administration. All documents amending, modifying, or revoking such orders, in whole or in part, shall likewise be designated as orders within such numbered series, and no other designation of such documents shall be used.

§0.181 Requirements for orders.

Each order prepared for issuance by or approval of the Attorney General shall be given a suitable title, shall contain a clear and concise statement explaining the substance of the order, and shall cite the authority for its issuance.

§0.182 Submission of proposed orders to the Office of Legal Counsel.

All orders prepared for the approval or signature of the Attorney General shall be submitted to the Office of Legal Counsel for approval as to form and legality and consistency with existing orders.

§0.183 Distribution of orders.

The distribution of orders, unless otherwise provided by the Attorney General, shall be determined by the Assistant Attorney General for Administration.

Subpart BB—Sections and Subunits

§ 0.190 Changes within organizational units.

(a) The head of each Office, Board, Division or Bureau may from time to time propose the establishment, transfer, reorganization or termination of major functions within his organizational unit as he may deem necessary or appropriate. In each instance, the head of the Office, Board, Division or Bureau shall submit the proposed change in writing to the Assistant Attorney General for Administration. The Assistant Attorney General for Administration shall evaluate the proposal and shall submit the proposed change, along with his recommendation, to the Associate Attorney when appropriate, and in all other cases directly to the Deputy Attorney General. Where the Associate Attorney General has received a proposed change, he shall evaluate it, and shall submit it along, with his recommendation, to the Deputy Attorney General. The Deputy Attorney General shall then approve or disapprove the change.

(b) The approval shall be final in the case of changes which do not affect the overall structure of the Department. Proposed changes which are determined by the Deputy Attorney General to affect the overall structure of the Department's organization shall be forwarded by the Deputy Attorney General to the Attorney General for final approval prior to implementation, and shall be effectuated by issuance of an Attorney General's order, in accordance with subpart AA of this part.

[Order No. 960–81, 46 FR 52354, Oct. 27, 1981]

§ 0.191 Changes which affect the overall structure of the Department.

Changes to the overall structure of the Department include: The establishment, merger or abolishment of Offices, Boards, Divisions, and Bureaus; changes in reporting lines of Offices, Boards, Divisions and Bureaus to the Department; and transfers of major functions between or among Offices, Boards, Divisions and Bureaus.

[Order No. 808–78, 43 FR 54929, Nov. 24, 1978]

Subpart CC—Jurisdictional Disagreements

§ 0.195 Procedure with respect to jurisdictional disagreements.

Any disagreement between or among heads of the organizational units as to their respective jurisdictions shall be resolved by the Attorney General, who may, if he so desires, issue an order in the numbered series disposing of the matter.

[Order No. 423–69, 34 FR 20388, Dec. 31, 1969. Redesignated by Order No. 445–70. 35 FR 19397, Dec. 23, 1970]

§ 0.196 Procedures for resolving disagreements concerning mail or case assignments.

When an assignment for the handling of mail or a case has been made through established procedures and the appropriate authorities in any organizational unit of the Department disagree concerning jurisdiction of the unit for handling the matter or matters assigned, the disagreement, together with a statement of the view of the unit or units involved, shall be referred to the Assistant Attorney General for Administration for determination. If the disagreement cannot be resolved, the matter shall be referred to the Deputy Attorney General for final disposition.

[Order No. 900–80, 45 FR 43703, June 30, 1980]

§ 0.197 Agreements, in connection with criminal proceedings or investigations, promising non-deportation or other immigration benefits.

The Immigration and Naturalization Service (Service) shall not be bound, in the exercise of its authority under the immigration laws, through plea agreements, cooperation agreements, or other agreements with or for the benefit of alien defendants, witnesses, or informants, or other aliens cooperating with the United States Government, except by the authorization of the Commissioner of the Service or the Commissioner's delegate. Both the agreement itself and the necessary authorization must be in writing to be effective, and the authorization shall be attached to the agreement.

[Order No. 2055–96, 61 FR 48406, Sept. 13, 1996]

PART 1—EXECUTIVE CLEMENCY

Sec.
1.1 Submission of petition; form to be used; contents of petition.
1.2 Eligibility for filing petition for pardon.
1.3 Eligibility for filing petition for commutation of sentence.
1.4 Offenses against the laws of possessions or territories of the United States.
1.5 Disclosure of files.
1.6 Consideration of petitions; notification of victims; recommendations to the President.
1.7 Notification of grant of clemency.
1.8 Notification of denial of clemency.
1.9 Delegation of authority.
1.10 Procedures applicable to prisoners under a sentence of death imposed by a United States District Court.
1.11 Advisory nature of regulations.

AUTHORITY: U.S. Const., Art. II, sec. 2; authority of the President as Chief Executive; and 28 U.S.C. 509, 510.

SOURCE: Order No. 1798–93, 58 FR 53658, Oct. 18, 1993, unless otherwise noted.

§ 1.1 Submission of petition; form to be used; contents of petition.

A person seeking executive clemency by pardon, reprieve, commutation of sentence, or remission of fine shall execute a formal petition. The petition shall be addressed to the President of the United States and shall be submitted to the Pardon Attorney, Department of Justice, Washington, DC 20530, except for petitions relating to military offenses. Petitions and other required forms may be obtained from the Pardon Attorney. Petition forms for commutation of sentence also may be obtained from the wardens of federal penal institutions. A petitioner applying for executive clemency with respect to military offenses should submit his or her petition directly to the Secretary of the military department that had original jurisdiction over the court-martial trial and conviction of the petitioner. In such a case, a form furnished by the Pardon Attorney may be used but should be modified to meet the needs of the particular case. Each petition for executive clemency should include the information required in the form prescribed by the Attorney General.

§ 1.2 Eligibility for filing petition for pardon.

No petition for pardon should be filed until the expiration of a waiting period of at least five years after the date of the release of the petitioner from confinement or, in case no prison sentence was imposed, until the expiration of a period of at least five years after the date of the conviction of the petitioner. Generally, no petition should be submitted by a person who is on probation, parole, or supervised release.

§ 1.3 Eligibility for filing petition for commutation of sentence.

No petition for commutation of sentence, including remission of fine, should be filed if other forms of judicial or administrative relief are available, except upon a showing of exceptional circumstances.

§ 1.4 Offenses against the laws of possessions or territories of the United States.

Petitions for executive clemency shall relate only to violations of laws of the United States. Petitions relating to violations of laws of the possessions of the United States or territories subject to the jurisdiction of the United States should be submitted to the appropriate official or agency of the possession or territory concerned.

§ 1.5 Disclosure of files.

Petitions, reports, memoranda, and communications submitted or furnished in connection with the consideration of a petition for executive clemency generally shall be available only to the officials concerned with the consideration of the petition. However, they may be made available for inspection, in whole or in part, when in the judgment of the Attorney General their disclosure is required by law or the ends of justice.

§ 1.6 Consideration of petitions; notification of victims; recommendations to the President.

(a) Upon receipt of a petition for executive clemency, the Attorney General shall cause such investigation to be made of the matter as he or she may deem necessary and appropriate, using the services of, or obtaining reports

from, appropriate officials and agencies of the Government, including the Federal Bureau of Investigation.

(b)(1) When a person requests clemency (in the form of either a commutation of a sentence or a pardon after serving a sentence) for a conviction of a felony offense for which there was a victim, and the Attorney General concludes from the information developed in the clemency case that investigation of the clemency case warrants contacting the victim, the Attorney General shall cause reasonable effort to be made to notify the victim or victims of the crime for which clemency is sought:

(i) That a clemency petition has been filed;

(ii) That the victim may submit comments regarding clemency; and

(iii) Whether the clemency request ultimately is granted or denied by the President.

(2) In determining whether contacting the victim is warranted, the Attorney General shall consider the seriousness and recency of the offense, the nature and extent of the harm to the victim, the defendant's overall criminal history and history of violent behavior, and the likelihood that clemency could be recommended in the case.

(3) For the purposes of this paragraph (b), ''victim'' means an individual who:

(i) Has suffered direct or threatened physical, emotional, or pecuniary harm as a result of the commission of the crime for which clemency is sought (or, in the case of an individual who died or was rendered incompetent as a direct and proximate result of the commission of the crime for which clemency is sought, one of the following relatives of the victim (in order of preference): the spouse; an adult offspring; or a parent); and

(ii) Has on file with the Federal Bureau of Prisons a request to be notified pursuant to 28 CFR 551.152 of the offender's release from custody.

(4) For the purposes of this paragraph (b), ''reasonable effort'' is satisfied by mailing to the last-known address reported by the victim to the Federal Bureau of Prisons under 28 CFR 551.152.

(5) The provisions of this paragraph (b) apply to clemency cases filed on or after September 28, 2000.

(c) The Attorney General shall review each petition and all pertinent information developed by the investigation and shall determine whether the request for clemency is of sufficient merit to warrant favorable action by the President. The Attorney General shall report in writing his or her recommendation to the President, stating whether in his or her judgment the President should grant or deny the petition.

[Order No. 2323–2000, 65 FR 58223, Sept. 28, 2000]

§ 1.7 Notification of grant of clemency.

When a petition for pardon is granted, the petitioner or his or her attorney shall be notified of such action and the warrant of pardon shall be mailed to the petitioner. When commutation of sentence is granted, the petitioner shall be notified of such action and the warrant of a commutation shall be sent to the petitioner through the officer in charge of his or her place of confinement, or directly to the petitioner if he/she is on parole, probation, or supervised release.

§ 1.8 Notification of denial of clemency.

(a) Whenever the President notifies the Attorney General that he has denied a request for clemency, the Attorney General shall so advise the petitioner and close the case.

(b) Except in cases in which a sentence of death has been imposed, whenever the Attorney General recommends that the President deny a request for clemency and the President does not disapprove or take other action with respect to that adverse recommendation within 30 days after the date of its submission to him, it shall be presumed that the President concurs in that adverse recommendation of the Attorney General, and the Attorney General shall so advise the petitioner and close the case.

§ 1.9 Delegation of authority.

The Attorney General may delegate to any officer of the Department of

Justice any of his or her duties or responsibilities under §§1.1 through 1.8.

§1.10 Procedures applicable to prisoners under a sentence of death imposed by a United States District Court.

The following procedures shall apply with respect to any request for clemency by a person under a sentence of death imposed by a United States District Court for an offense against the United States. Other provisions set forth in this part shall also apply to the extent they are not inconsistent with this section.

(a) Clemency in the form of reprieve or commutation of a death sentence imposed by a United States District Court shall be requested by the person under the sentence of death or by the person's attorney acting with the person's written and signed authorization.

(b) No petition for reprieve or commutation of a death sentence should be filed before proceedings on the petitioner's direct appeal of the judgment of conviction and first petition under 28 U.S.C. 2255 have terminated. A petition for commutation of sentence should be filed no later than 30 days after the petitioner has received notification from the Bureau of Prisons of the scheduled date of execution. All papers in support of a petition for commutation of sentence should be filed no later than 15 days after the filing of the petition itself. Papers filed by the petitioner more than 15 days after the commutation petition has been filed may be excluded from consideration.

(c) The petitioner's clemency counsel may request to make an oral presentation of reasonable duration to the Office of the Pardon Attorney in support of the clemency petition. The presentation should be requested at the time the clemency petition is filed. The family or families of any victim of an offense for which the petitioner was sentenced to death may, with the assistance of the prosecuting office, request to make an oral presentation of reasonable duration to the Office of the Pardon Attorney.

(d) Clemency proceedings may be suspended if a court orders a stay of execution for any reason other than to allow completion of the clemency proceeding.

(e) Only one request for commutation of a death sentence will be processed to completion, absent a clear showing of exceptional circumstances.

(f) The provisions of this §1.10 apply to any person under a sentence of death imposed by a United States District Court for whom an execution date is set on or after August 1, 2000.

[Order No. 2317–2000, 65 FR 48381, August 8, 2000]

§1.11 Advisory nature of regulations.

The regulations contained in this part are advisory only and for the internal guidance of Department of Justice personnel. They create no enforceable rights in persons applying for executive clemency, nor do they restrict the authority granted to the President under Article II, section 2 of the Constitution.

[Order No. 1798–93, 58 FR 53658, Oct. 18, 1993. Redesignated by Order No. 2317–2000, 65 FR 48381, August 8, 2000]

PART 2—PAROLE, RELEASE, SUPERVISION AND RECOMMITMENT OF PRISONERS, YOUTH OFFENDERS, AND JUVENILE DELINQUENTS

Subpart A—United States Code Prisoners and Parolees

Sec.

2.1 Definitions.
2.2 Eligibility for parole; adult sentences.
2.3 Same: Narcotic Addict Rehabilitation Act.
2.4 Same: Youth offenders and juvenile delinquents.
2.5 Sentence aggregation.
2.6 Withheld and forfeited good time.
2.7 Committed fines and restitution orders.
2.8 Mental competency proceedings.
2.9 Study prior to sentencing.
2.10 Date service of sentence commences.
2.11 Application for parole; notice of hearing.
2.12 Initial hearings: Setting presumptive release dates.
2.13 Initial hearing; procedure.
2.14 Subsequent proceedings.
2.15 Petition for consideration of parole prior to date set at hearing.
2.16 Parole of prisoner in state, local, or territorial institution.
2.17 Original jurisdiction cases.
2.18 Granting of parole.

2.19 Information considered.
2.20 Paroling policy guidelines: Statement of general policy.
2.21 Reparole consideration guidelines.
2.22 Communication with the Commission.
2.23 Delegation to hearing examiners.
2.24 Review of panel recommendation by the Regional Commissioner.
2.25 Hearings by videoconference.
2.26 Appeal to National Appeals Board.
2.27 Petition for reconsideration of original jurisdiction decisions.
2.28 Reopening of cases.
2.29 Release on parole.
2.30 False information or new criminal conduct: Discovery after release.
2.31 Parole to detainers: Statement of policy.
2.32 Parole to local or immigration detainers.
2.33 Release plans.
2.34 Rescission of parole.
2.35 Mandatory release in the absence of parole.
2.36 Rescission guidelines.
2.37 Disclosure of information concerning parolees; Statement of policy.
2.38 Community supervision by U.S. Probation Officers.
2.39 Jurisdiction of the Commission.
2.40 Conditions of release.
2.41 Travel approval.
2.42 Probation officer's reports to Commission.
2.43 Early termination.
2.44 Summons to appear or warrant for retaking of parolee.
2.45 Same; youth offenders.
2.46 Execution of warrant and service of summons.
2.47 Warrant placed as a detainer and dispositional review.
2.48 Revocation: Preliminary interview.
2.49 Place of revocation hearing.
2.50 Revocation hearing procedure.
2.51 Issuance of a subpoena for the appearance of witnesses or production of documents.
2.52 Revocation decisions.
2.53 Mandatory parole.
2.54 Reviews pursuant to 18 U.S.C. 4215(c).
2.55 Disclosure of file prior to parole hearing.
2.56 Disclosure of Parole Commission file.
2.57 Special parole terms.
2.58 Prior orders.
2.59 Designation of a Commissioner to act as a hearing examiner.
2.60 Superior program achievement.
2.61 Qualifications of representatives.
2.62 Rewarding assistance in the prosecution of other offenders; criteria and guidelines.
2.63 Quorum.
2.64 Youth Corrections Act.
2.65 Paroling policy for prisoners serving aggregate U.S. and D.C. Code sentences.
2.66 Expedited Revocation Procedure.

Subpart B—Transfer Treaty Prisoners and Parolees

2.68 Prisoners transferred pursuant to treaty.
2.69 [Reserved]

Subpart C—District of Columbia Code: Prisoners and Parolees

2.70 Authority and functions of the U.S. Parole Commission with respect to District of Columbia Code offenders.
2.71 Application for parole.
2.72 Hearing procedure.
2.73 Parole suitability criteria.
2.74 Decision of the Commission.
2.75 Reconsideration proceedings.
2.76 Reduction in minimum sentence.
2.77 Medical parole.
2.78 Geriatric parole.
2.79 Good time forfeiture.
2.80 Guidelines for D.C. Code offenders.
2.81 Reparole decisions.
2.82 Effective date of parole.
2.83 Release planning.
2.84 Release to other jurisdictions.
2.85 Conditions of release.
2.86 Release on parole; rescission for misconduct.
2.87 Mandatory release.
2.88 Confidentiality of parole records.
2.89 Miscellaneous provisions.
2.90 Prior orders of the Board of Parole.
2.91 Supervision responsibility.
2.92 Jurisdiction of the Commission.
2.93 Travel approval.
2.94 Supervision reports to Commission.
2.95 Release from active supervision.
2.96 Order of release.
2.97 Withdrawal of order of release.
2.98 Summons to appear or warrant for retaking of parolee.
2.99 Execution of warrant and service of summons.
2.100 Warrant placed as detainer and dispositional review.
2.101 Probable cause hearing and determination.
2.102 Place of revocation hearing.
2.103 Revocation hearing procedure.
2.104 Issuance of subpoena for appearance of witnesses or production of documents.
2.105 Revocation decisions.
2.106 Youth Rehabilitation Act.
2.107 Interstate Compact.

Subpart D—District of Columbia Supervised Releasees

2.200 Authority, jurisdiction, and functions of the U.S. Parole Commission with respect to offenders serving terms of supervised release imposed by the Superior Court of the District of Columbia.

2.201 Period of supervised release.
2.202 Prerelease procedures.
2.203 Certificate of supervised release.
2.204 Conditions of supervised release.
2.205 Confidentiality of supervised release records.
2.206 Travel approval and transfers of supervision.
2.207 Supervision reports to Commission.
2.208 Termination of a term of supervised release.
2.209 Order of termination.
2.210 Extension of term.
2.211 Summons to appear or warrant for retaking releasee.
2.212 Execution of warrant and service of summons.
2.213 Warrant placed as detainer and dispositional review.
2.214 Probable cause hearing and determination.
2.215 Place of revocation hearing.
2.216 Revocation hearing procedure.
2.217 Issuance of subpoena for appearance of witnesses or production of documents.
2.218 Revocation decisions.
2.219 Maximum terms of imprisonment and supervised release.
2.220 Appeal.

AUTHORITY: 18 U.S.C. 4203(a)(1) and 4204(a)(6).

SOURCE: 42 FR 39809, Aug. 5, 1977, unless otherwise noted.

Subpart A—United States Code Prisoners and Parolees

§2.1 Definitions.

As used in this part:

(a) The term *Commission* refers to the U.S. Parole Commission.

(b) The term *Commissioner* refers to members of the U.S. Parole Commission.

(c) The term *National Appeals Board* refers to the three-member Commission sitting as a body to decide appeals taken from decisions of a Regional Commissioner, who participates as a member of the National Appeals Board. The Vice Chairman shall be Chairman of the National Appeals Board.

(d) The term *National Commissioners* refers to the Chairman of the Commission and to the Commissioner who is not serving as the Regional Commissioner in respect to a particular case.

(e) The term *Regional Commissioner* refers to Commissioners who are assigned to make initial decisions, pursuant to the authority delegated by these rules, in respect to prisoners and parolees in regions defined by the Commission.

(f) The term *eligible prisoner* refers to any Federal prisoner eligible for parole pursuant to this part and includes any Federal prisoner whose parole has been revoked and who is not otherwise ineligible for parole.

(g) The term *parolee* refers to any Federal prisoner released on parole or as if on parole pursuant to 18 U.S.C. 4164 or 4205(f). The term *mandatory release* refers to release pursuant to 18 U.S.C. 4163 and 4164.

(h) The term *effective date of parole* refers to a parole date that has been approved following an in-person hearing held within nine months of such date, or following a pre-release record review.

(i) All other terms used in this part shall be deemed to have the same meaning as identical or comparable terms as used in chapter 311 of part IV of title 18 of the U.S. Code or 28 CFR chapter I, part 0, subpart V.

[42 FR 39809, Aug. 5, 1977, as amended at 43 FR 22707, May 26, 1978; Order No. 960–81, 46 FR 52354, Oct. 27, 1981; 60 FR 51350, Oct. 2, 1995; 61 FR 55743, Oct. 29, 1996]

§2.2 Eligibility for parole; adult sentences.

(a) A Federal prisoner serving a maximum term or terms of more than one year imposed pursuant to 18 U.S.C. 4205 (a) (or pursuant to former 18 U.S.C. 4202) may be released on parole in the discretion of the Commission after completion of one-third of such term or terms, or after completion of ten years of a life sentence or of a sentence of over thirty years.

(b) A Federal prisoner serving a maximum term or terms of more than one year imposed pursuant to 18 U.S.C. 4205(b)(1) (or pursuant to former 18 U.S.C. 4208(a)(1)) may be released on parole in the discretion of the Commission after completion of the court-designated minimum term, which may be less than but not more than one-third of the maximum sentence imposed.

(c) A Federal prisoner serving a maximum term or terms of more than one year imposed pursuant to 18 U.S.C. 4205(b)(2) (or pursuant to former 18 U.S.C. 4208(a)(2)) may be released on

parole at any time in the discretion of the Commission.

(d) If the Court has imposed a maximum term or terms of more than one year pursuant to 18 U.S.C. 924(a) or 26 U.S.C. 5871 [violation of Federal gun control laws], a Federal prisoner serving such term or terms may be released in the discretion of the Commission as if sentenced pursuant to 18 U.S.C. 4205(b)(2). However, if the prisoner's offense was committed on or after October 12, 1984, and the Court imposes a term or terms under 26 U.S.C. 5871, the prisoner is eligible for parole only after service of one-third of such term or terms, pursuant to 18 U.S.C. 4205(a).

(e) A Federal prisoner serving a maximum term or terms of one year or less is not eligible for parole consideration by the Commission.

[42 FR 41408, Aug. 17, 1977, as amended at 50 FR 36423, Sept. 6, 1985; 53 FR 46870, Nov. 21, 1988]

§ 2.3 Same: Narcotic Addict Rehabilitation Act.

A Federal prisoner committed under the Narcotic Addict Rehabilitation Act may be released on parole in the discretion of the Commission after completion of at least six months in treatment, not including any period of time for ''study'' prior to final judgment of the court. Before parole is ordered by the Commission, the Surgeon General or his designated representative must certify that the prisoner has made sufficient progress to warrant his release and the Attorney General or his designated representative must also report to the Commission whether the prisoner should be released. Recertification by the Surgeon General prior to reparole consideration is not required (18 U.S.C. 4254).

[48 FR 22918, May 23, 1983]

§ 2.4 Same: Youth offenders and juvenile delinquents.

Committed youth offenders and juvenile delinquents may be released on parole at any time in the discretion of the Commission.

(18 U.S.C. 5017(a) and 5041)

[45 FR 44925, July 2, 1980]

§ 2.5 Sentence aggregation.

When multiple sentences are aggregated by the Bureau of Prisons pursuant to 18 U.S.C. 4161 and 4205, such sentences are treated as a single aggregate sentence for the purpose of every action taken by the Commission pursuant to these rules, and the prisoner has a single parole eligibility date as determined by the Bureau of Prisons.

[45 FR 44925, July 2, 1980]

§ 2.6 Withheld and forfeited good time.

While neither a forfeiture of good time nor a withholding of good time shall bar a prisoner from receiving a parole hearing, section 4206 of title 18 of the U.S. Code permits the Commission to parole only those prisoners who have substantially observed the rules of the institution.

[43 FR 38822, Aug. 31, 1978]

§ 2.7 Committed fines and restitution orders.

(a) *Committed fines.* In any case in which a prisoner shall have had a fine imposed upon him by the committing court for which he is to stand committed until it is paid or until he is otherwise discharged according to law, such prisoner shall not be released on parole or mandatory release until payment of the fine, or until the fine commitment order is discharged according to law under the regulations of the Bureau of Prisons. Discharge from the commitment obligation of any committed fine does not discharge the prisoner's obligation to pay the fine as a debt due the United States.

(b) *Restitution orders.* Where a prisoner applying for parole is under an order of restitution, and it appears that the prisoner has the ability to pay and has willfully failed to do so, the Commission shall require that approval of a parole release plan be contingent upon the prisoner first satisfying such restitution order. The prisoner shall be notified that failure to satisfy this condition shall result in retardation of parole under the provisions of § 2.28(e).

[48 FR 44527, Sept. 29, 1983, as amended at 50 FR 36422, Sept. 6, 1985]

§ 2.8 Mental competency proceedings.

(a) Whenever a prisoner (or parolee) is scheduled for a hearing in accordance with the provisions of this part and reasonable doubt exists as to his mental competency, i.e., his ability to understand the nature of and participate in scheduled proceedings, a preliminary inquiry to determine his mental competency shall be conducted by the hearing panel, hearing examiner or other official (including a U.S. Probation Officer) designated by the Regional Commissioner.

(b) The hearing examiner(s) or designated official shall receive oral or written psychiatric or psychological testimony and other evidence that may be available. A preliminary determination of mental competency shall be made upon the testimony, evidence, and personal observation of the prisoner (or parolee). If the examiner(s) or designated official determines that the prisoner is mentally competent, the previously scheduled hearing shall be held. If they determine that the prisoner is not mentally competent, the previously scheduled hearing shall be temporarily postponed.

(c) Whenever the hearing examiner(s) or designated official determine that a prisoner is mentally incompetent and postpone the previously scheduled hearing, they shall forward the record of the preliminary hearing with their findings to the Regional Commissioner for review.

(1) In the case of a prisoner, if the Regional Commissioner concurs with their findings, the Commissioner shall order the temporarily postponed hearing to be postponed indefinitely until such time as it is determined that the prisoner has recovered sufficiently to understand the proceedings. The Regional Commissioner shall require a progress report on the mental health of the prisoner at least every six months. When the Regional Commissioner determines that the prisoner has recovered sufficiently, the Commissioner shall reschedule the hearing for the earliest feasible date.

(2) In the case of a parolee in a revocation proceeding, the Regional Commissioner shall postpone the revocation hearing and order that the parolee be given a mental health examination in a suitable facility of the Bureau of Prisons or the District of Columbia. The postponed revocation hearing shall be held within 60 days, or as soon as a satisfactory mental health report is submitted. The Regional Commissioner shall order that appointment of counsel be sought in any case where the parolee does not have counsel for the revocation hearing. If the parolee's mental incompetency is raised at a preliminary interview or probable cause hearing, the Commission (or hearing official) will make a determination of probable cause and, if probable cause is found, schedule a revocation hearing as provided in this paragraph.

(d) If the Regional Commissioner disagrees with the findings of the hearing examiner(s) or designated official as to the mental competency of the prisoner, he shall take such action as he deems appropriate.

(e) At a postponed revocation hearing under this section, the hearing examiner shall make a preliminary determination as to the parolee's mental competency, taking into account all available mental health reports, any evidence submitted on the parolee's behalf, any report from counsel as to counsel's ability to communicate with the parolee, and the parolee's own responses to the examiner's questioning.

(1) If the hearing examiner determines the parolee to be mentally competent, the examiner shall conduct the revocation hearing. If counsel has previously asserted the parolee's incompetence, the examiner shall offer counsel a brief recess to consult with the parolee before proceeding.

(2) If the hearing examiner determines the parolee to be mentally incompetent, the examiner shall conduct the revocation hearing, and shall take into full account the parolee's mental condition in determining the facts and recommending a decision as to revocation and reparole.

(3) If the Commission revokes parole, the Commission may grant reparole conditioned on the parolee's acceptance into a particular type of mental health program prior to release from prison, or may grant reparole with a special condition of supervision that requires appropriate mental health treatment, including medication. In

cases where no other option appears appropriate, the Commission may grant reparole conditioned upon the parolee's voluntary self-commitment to a mental health institution until such time as the parolee has sufficiently recovered for the Commission to permit the parolee's return to supervision.

(4) If the Commission finds that the parolee did not commit the charged violations of parole, but also finds that the parolee is unable to fulfill the normal obligations of a parolee by reason of his mental condition, the Commission may reinstate the parolee to parole with any appropriate special condition, including the special condition, if necessary, that the parolee voluntarily commit himself to a mental institution until such time as the parolee has sufficiently recovered for the Commission to permit a return to supervision.

[44 FR 3408, Jan. 16, 1979, as amended at 68 FR 70711, Dec. 19, 2003]

§ 2.9 Study prior to sentencing.

When an adult Federal offender has been committed to an institution by the sentencing court for observation and study prior to sentencing, under the provisions of 18 U.S.C. 4205(c), the report to the sentencing court is prepared and submitted directly by the Bureau of Prisons.

[50 FR 36423, Sept. 6, 1985, as amended at 68 FR 41528, July 14, 2003]

§ 2.10 Date service of sentence commences.

(a) Service of a sentence of imprisonment commences to run on the date on which the person is received at the penitentiary, reformatory, or jail for service of the sentence: *Provided, however,* That any such person shall be allowed credit toward the service of his sentence for any days spent in custody in connection with the offense or acts for which sentence was imposed.

(b) The imposition of a sentence of imprisonment for civil contempt shall interrupt the running of any sentence of imprisonment being served at the time the sentence of civil contempt is imposed, and the sentence or sentences so interrupted shall not commence to run again until the sentence of civil contempt is lifted.

(c) Service of the sentence of a committed youth offender or person committed under the Narcotic Addict Rehabilitation Act commences to run from the date of conviction and is interrupted only when such prisoner or parolee:

(1) Is on court-ordered bail;

(2) Is in escape status;

(3) Has absconded from parole supervision; or

(4) Comes within the provisions of paragraph (b) of this section.

[42 FR 39809, Aug. 5, 1977, as amended at 47 FR 36634, Aug. 23, 1982]

§ 2.11 Application for parole; notice of hearing.

(a) A federal prisoner (including a committed youth offender or prisoner sentenced under the Narcotic Addict Rehabilitation Act) desiring to apply for parole shall execute an application form as prescribed by the Commission. Such forms shall be available at each federal institution and shall be provided to each prisoner who is eligible for an initial parole hearing pursuant to § 2.12. Prisoners committed under the Federal Juvenile Delinquency Act shall be considered for parole without application and may not waive parole consideration. A prisoner who receives an initial hearing need not apply for subsequent hearings.

(b) A prisoner may knowingly and intelligently waive any parole consideration on a form provided for that purpose. If a prisoner waives parole consideration, he may later apply for parole and may be heard during the next visit of the Commission to the institution at which he is confined, provided that he has applied at least 60 days prior to the first day of the month in which such visit of the Commission occurs.

(c) A prisoner who declines either to apply for or waive parole consideration is deemed to have waived parole consideration.

(d) In addition to the above procedures relating to parole application, all prisoners prior to initial hearing shall be provided with an inmate background statement by the Bureau of Prisons for completion by the prisoner.

(e) At least sixty days prior to the initial hearing (and prior to any hearing conducted pursuant to §2.14), the prisoner shall be provided with written notice of the time and place of the hearing and of his right to review the documents to be considered by the Commission, as provided by §2.55. A prisoner may waive such notice, except that if such notice is not waived, the case shall be continued to the time of the next regularly scheduled proceeding of the Commission at the institution in which the prisoner is confined.

[42 FR 39809, Aug. 5, 1977, as amended at 45 FR 6381, Jan. 28, 1980; 47 FR 21041, May 17, 1982; 49 FR 7228, Feb. 28, 1984]

§2.12 Initial hearings: Setting presumptive release dates.

(a) An initial hearing shall be conducted within 120 days of a prisoner's arrival at a federal institution or as soon thereafter as practicable; except that in a case of a prisoner with a minimum term of parole ineligibility of ten years or more, the initial hearing will be conducted nine months prior to the completion of such a minimum term, or as soon thereafter as practicable.

(b) Following initial hearing, the Commission shall (1) set a presumptive release date (either by parole or by mandatory release) within fifteen years of the hearing; (2) set an effective date of parole; or (3) continue the prisoner to a fifteen year reconsideration hearing pursuant to §2.14(c).

(c) Notwithstanding the above paragraph, a prisoner may not be paroled earlier than the completion of any judicially set minimum term of imprisonment or other period of parole ineligibility fixed by law.

(d) A presumptive parole date shall be contingent upon an affirmative finding by the Commission that the prisoner has a continued record of good conduct and a suitable release plan and shall be subject to the provisions of §§2.14 and 2.28. In the case of a prisoner sentenced under the Narcotic Addict Rehabilitation Act, 18 U.S.C. 4254, a presumptive parole date shall also be contingent upon certification by the Surgeon General pursuant to §2.3 of these rules. Consideration of disciplinary infractions in cases with presumptive parole dates may be deferred until the commencement of the next in-person hearing or the prerelease record review required by §2.14(b). While prisoners are encouraged to earn the restoration of forfeited or withheld good time, the Commission will consider the prisoner's overall institutional record in determining whether the conditions of a presumptive parole date have been satisfied.

[42 FR 39809, Aug. 5, 1977, as amended at 44 FR 3405, 3407, Jan. 16, 1979; 48 FR 22919, May 23, 1983; 49 FR 34208, Aug. 29, 1984; 57 FR 41391, Sept. 10, 1992; 60 FR 51350, Oct. 2, 1995]

§2.13 Initial hearing; procedure.

(a) An initial hearing shall be conducted by a single hearing examiner unless the Regional Commissioner orders that the hearing be conducted by a panel of two examiners. The examiner shall discuss with the prisoner his offense severity rating and salient factor score as described in §2.20, his institutional conduct and, in addition, any other matter the examiner may deem relevant.

(b) A prisoner may be represented at a hearing by a person of his or her choice. The function of the prisoner's representative shall be to offer a statement at the conclusion of the interview of the prisoner by the examiner, and to provide such additional information as the examiner shall request. Interested parties who oppose parole may select a representative to appear and offer a statement. The hearing examiner shall limit or exclude any irrelevant or repetitious statement.

(c) At the conclusion of the hearing, the examiner shall discuss the decision to be recommended by the examiner and the reasons therefor, except in the extraordinary circumstance of a complex issue that requires further deliberation before a recommendation can be made. Written notice of the decision shall be mailed or transmitted to the prisoner within 21 days of the date of the hearing, except in emergencies. Whenever the Commission initially establishes a release date (or modifies the release date thereafter), the prisoner shall also receive in writing the reasons therefor.

(d) In accordance with 18 U.S.C. 4206, the reasons for establishment of a release date shall include a guidelines evaluation statement containing the prisoner's offense severity rating and salient factor score (including the points credited on each item of such score) as described in § 2.20, as well as the specific factors and information relied upon for any decision outside the range indicated by the guidelines.

(e) No interviews with the Commission, or any representative thereof, shall be granted to a prisoner unless his name is docketed for a hearing in accordance with Commission procedures. Hearings shall not be open to the public.

(f) A full and complete record of every hearing shall be retained by the Commission. Upon a request, pursuant to § 2.56, the Commission shall make available to any eligible prisoner such record as the Commission has retained of the hearing.

[42 FR 39809, Aug. 5, 1977, as amended at 45 FR 6381, Jan. 28, 1980; 47 FR 25736, June 15, 1982; 48 FR 23183, May 24, 1983; 59 FR 45625, Sept. 2, 1994; 68 FR 41528, July 14, 2003]

§ 2.14 Subsequent proceedings.

(a) *Interim proceedings*. The purpose of an interim hearing required by 18 U.S.C. 4208(h) shall be to consider any significant developments or changes in the prisoner's status that may have occurred subsequent to the initial hearing.

(1) Notwithstanding a previously ordered presumptive release date or fifteen year reconsideration hearing, interim hearings shall be conducted pursuant to the procedures of § 2.13(b), (c), (e), and (f) at the following intervals from the date of the last hearing:

(i) In the case of a prisoner with a maximum term or terms of less than seven years, every eighteen months (until released);

(ii) In the case of a prisoner with a maximum term or terms of seven years or more, every twenty-four months (until released);

(iii) In the case of a prisoner with an unsatisfied minimum term, the first interim hearing shall be scheduled under paragraphs (a)(1)(i) or (ii) of this section, or on the docket of hearings that is nine months prior to the month of parole eligibility, whichever is later.

(2) Following an interim hearing, the Commission may:

(i) Order no change in the previous decision;

(ii) Advance a presumptive release date, or the date of a fifteen year reconsideration hearing. However, it shall be the policy of the Commission that once set, a presumptive release date or the date of a fifteen year reconsideration hearing shall be advanced only:

(*1*) For superior program achievement under the provisions of § 2.60; or

(*2*) For other clearly exceptional circumstances.

(iii) Retard or rescind a presumptive parole date for reason of disciplinary infractions. In a case in which disciplinary infractions have occurred, the interim hearing shall be conducted in accordance with the procedures of § 2.34(c) through (f). (Prior to each interim hearing, prisoners shall be notified on the progress report furnished by the Bureau of Prisons that any finding of misconduct by the Discipline Hearing Officer since the previous hearing will be considered for possible action under this paragraph);

(iv) If a presumptive date falls within nine months after the date of an interim hearing, the Commission may treat the interim hearing as a prerelease review in lieu of the record review required by paragraph (b) of this section.

(b) *Pre-release reviews*. The purpose of a pre-release review shall be to determine whether the conditions of a presumptive release date by parole have been satisfied.

(1) At least sixty days prior to a presumptive parole date, the case shall be reviewed on the record, including a current institutional progress report.

(2) Following review, the Regional Commissioner may:

(i) Approve the parole date;

(ii) Advance or retard the parole date for purpose of release planning as provided by § 2.28(e);

(iii) Retard the parole date or commence rescission proceedings as provided by § 2.34;

(iv) Advance the parole date for superior program achievement under the provisions of § 2.60.

(3) A pre-release review pursuant to this section shall not be required if an in-person hearing has been held within nine months of the parole date.

(4) Where:

(i) There has been no finding of misconduct by an Institutional Disciplinary Committee nor any allegation of criminal conduct since the last hearing; and

(ii) No other modification of the release date appears warranted, the Executive Hearing Examiner may act for the Regional Commissioner under paragraph (b)(2) of this section to approve conversion of the presumptive parole date to an effective date of parole.

(c) *Fifteen year reconsideration hearings.* A fifteen year reconsideration hearing shall be a full reassessment of the case pursuant to the procedures at § 2.13.

(1) A fifteen year reconsideration hearing shall be ordered following initial hearing in any case in which a release date is not set.

(2) Following a fifteen year reconsideration hearing, the Commission may take any one of the actions authorized by § 2.12(b).

[46 FR 39136, July 31, 1981; 47 FR 25735, June 15, 1982, as amended at 48 FR 9247, Mar. 4, 1983; 48 FR 44525, Sept. 29, 1983; 49 FR 34208, Aug. 29, 1984; 55 FR 290, Jan. 4, 1990; 60 FR 51350, Oct. 2, 1995; 68 FR 41529, July 14, 2003]

§ 2.15 Petition for consideration of parole prior to date set at hearing.

When a prisoner has served the minimum term of imprisonment required by law, the Bureau of Prisons may petition the responsible Regional Commissioner for reopening the case under § 2.28(a) and consideration for parole prior to the date set by the Commission at the initial or review hearing. The petition must show cause why it should be granted, i.e., an emergency, hardship, or the existence of other extraordinary circumstances that would warrant consideration of early parole.

[42 FR 39809, Aug. 5, 1977, as amended at 44 FR 3407, Jan. 16, 1979]

§ 2.16 Parole of prisoner in state, local, or territorial institution.

(a) Any person who is serving a sentence of imprisonment for any offense against the United States, but who is confined therefor in a state reformatory or other state or territorial institution, shall be eligible for parole by the Commission on the same terms and conditions, by the same authority, and subject to recommittal for the violation of such parole, as though he were confined in a Federal penitentiary, reformatory, or other correctional institution.

(b) Federal prisoners serving concurrent state and Federal sentences in state, local, or territorial institutions shall be furnished upon request parole application forms. Upon receipt of the application and any supplementary classification material submitted by the institution, parole consideration shall be made by an examiner panel of the appropriate region on the record only. If such prisoner is released from his state sentence prior to a Federal grant of parole, he shall be given a personal hearing as soon as feasible after receipt at a Federal institution.

(c) Prisoners who are serving Federal sentences exclusively but who are being boarded in State, local, or territorial institutions may be provided hearings at such facilities or may be transferred by the Bureau of Prisons to Federal Institutions for hearings by examiner panels of the Commission.

(18 U.S.C. 4203, 4204)

[42 FR 39809, Aug. 5, 1977, as amended at 45 FR 44924, July 2, 1980; 50 FR 36424, Sept. 6, 1985]

§ 2.17 Original jurisdiction cases.

(a) Following any hearing conducted pursuant to these rules, the Regional Commissioner may designate that a case should be decided as an original jurisdiction case. If the Regional Commissioner makes such a designation, the Regional Commissioner shall vote on the case and then refer the case to the other Commissioners for their votes. The decision in an original jurisdiction case shall be made on the basis of a majority vote of Commissioners holding office at the time of the decision.

(b) The following criteria will be used in designating cases as original jurisdiction cases:

(1) Prisoners who have committed serious crimes against the security of the Nation, e.g., espionage or aggravated subversive activity.

(2) Prisoners whose offense behavior:

(i) Involved an unusual degree of sophistication or planning, or

(ii) Was part of a large scale criminal conspiracy or a continuing criminal enterprise.

(3) Prisoners who have received national or unusual attention because of the nature of the crime, arrest, trial, or prisoner status, or because of the community status of the offender or his victim.

(4) *Long-term sentences*. Prisoners sentenced to a maximum term of forty-five years (or more) or prisoners serving life sentences.

(c)(1) Any case designated for the original jurisdiction of the Commission shall remain an original jurisdiction case unless designation is removed pursuant to this subsection.

(2) A case found to be inappropriately designated for the Commission's original jurisdiction, or to no longer warrant such designation, may be removed from original jurisdiction under the procedures specified in paragraph (a) of this section following a regularly scheduled hearing or the reopening of the case pursuant to § 2.28. Removal from original jurisdiction may also occur by majority vote of the Commission considering a petition for reconsideration pursuant to § 2.27. Where the circumstances warrant, a case may be redesignated as original jurisdiction pursuant to the provisions of paragraphs (a) and (b) of this section.

[42 FR 39809, Aug. 5, 1977, as amended at 42 FR 44234, Sept. 2, 1977; 48 FR 53409, Nov. 28, 1983; 61 FR 13763, Mar. 28, 1996; 61 FR 55743, Oct. 29, 1996; 68 FR 41529, July 14, 2003]

§ 2.18 Granting of parole.

The granting of parole to an eligible prisoner rests in the discretion of the U.S. Parole Commission. As prerequisites to a grant of parole, the Commission must determine that the prisoner has substantially observed the rules of the institution or institutions in which he has been confined; and upon consideration of the nature and circumstances of the offense and the history and characteristics of the prisoner, must determine that release would not depreciate the seriousness of his offense or promote disrespect for the law, and that release would not jeopardize the public welfare (i.e., that there is a reasonable probability that, if released, the prisoner would live and remain at liberty without violating the law or the conditions of his parole).

§ 2.19 Information considered.

(a) In making a parole or reparole determination the Commission shall consider, if available and relevant:

(1) Reports and recommendations which the staff of the facility in which such prisoner is confined may make;

(2) Official reports of the prisoner's prior criminal record, including a report or record of earlier probation and parole experiences;

(3) Pre-sentence investigation reports;

(4) Recommendations regarding the prisoner's parole made at the time of sentencing by the sentencing judge and prosecuting attorney;

(5) Reports of physical, mental, or psychiatric examination of the offender; and

(6) A statement, which may be presented orally or otherwise, by any victim of the offense for which the prisoner is imprisoned about the financial, social, psychological, and emotional harm done to, or loss suffered by such victim.

(b)(1) There shall also be taken into consideration such additional relevant information concerning the prisoner (including information submitted by the prisoner) as may be reasonably available (18 U.S.C. 4207). The Commission encourages the submission of relevant information concerning an eligible prisoner by interested persons.

(2) To permit adequate review of information concerning the prisoner, materials submitted to the Commission should be received by the Commission no later than the first day of the month preceding the month of the scheduled hearing docket.

(3) If material of more than six (6), double-spaced, letter-sized pages is

first submitted at the time of the hearing (or preliminary interview) and the hearing panel (or person conducting the hearing or preliminary interview) concludes that it is not feasible to read all the material at that time, the person submitting the material will be permitted to summarize it briefly at the hearing (or preliminary interview). All of the material submitted will become part of the record to be considered by the Commission in its review of the proceedings.

(4) The Commission will normally consider only verbal and written evidence at hearings. Recorded audio and visual material will be reviewed at hearings only if there is no adequate substitute to permit a finding under paragraph (c) of this section. Otherwise, recorded audio and visual material should be submitted prior to the hearing for review and summarization, pursuant to paragraph (b)(2) of this section.

(c) The Commission may take into account any substantial information available to it in establishing the prisoner's offense severity rating, salient factor score, and any aggravating or mitigating circumstances, provided the prisoner is apprised of the information and afforded an opportunity to respond. If the prisoner disputes the accuracy of the information presented, the Commission shall resolve such dispute by the preponderance of the evidence standard; that is, the Commission shall rely upon such information only to the extent that it represents the explanation of the facts that best accords with reason and probability. If the Commission is given evidence of criminal behavior that has been the subject of an acquittal in a federal, state, or local court, the Commission may consider that evidence if:

(1) The Commission finds that it cannot adequately determine the prisoner's suitability for release on parole, or to remain on parole, unless the evidence is taken into account;

(2) The Commission is satisfied that the record before it is adequate notwithstanding the acquittal;

(3) The prisoner has been given the opportunity to respond to the evidence before the Commission; and

(4) The evidence before the Commission meets the preponderance standard.

In any other case, the Commission shall defer to the trial jury. Offense behavior in Category 5 or above shall presumptively support a finding under paragraph (c)(1) of this section.

(d) Recommendations and information from sentencing judges, defense attorneys, prosecutors, and other interested parties are welcomed by the Commission. In evaluating a recommendation concerning parole, the Commission must consider the degree to which such recommendation provides the Commission with specific facts and reasoning relevant to the statutory criteria for parole (18 U.S.C. 4206) and the application of the Commission's guidelines (including reasons for departure therefrom). Thus, to be most helpful, a recommendation should state its underlying factual basis and reasoning. However, no recommendation (including a prosecutorial recommendation pursuant to a plea agreement) may be considered as binding upon the Commission's discretionary authority to grant or deny parole.

[42 FR 39809, Aug. 5, 1977, as amended at 44 FR 26550, May 4, 1979; 44 FR 27658, May 11, 1979; 44 FR 31638, June 1, 1979; 49 FR 34207, Aug. 29, 1984; 49 FR 44098, Nov. 2, 1984; 50 FR 36423, Sept. 6, 1985; 51 FR 7064, Feb. 28, 1986; 56 FR 16270, Apr. 22, 1991; 56 FR 30868, July 8, 1991; 58 FR 16612, Mar. 30, 1993]

§ 2.20 Paroling policy guidelines: Statement of general policy.

(a) To establish a national paroling policy, promote a more consistent exercise of discretion, and enable fairer and more equitable decision-making without removing individual case consideration, the U.S. Parole Commission has adopted guidelines for parole release consideration.

(b) These guidelines indicate the customary range of time to be served before release for various combinations of offense (severity) and offender (parole prognosis) characteristics. The time ranges specified by the guidelines are established specifically for cases with good institutional adjustment and program progress.

(c) These time ranges are merely guidelines. Where the circumstances

warrant, decisions outside of the guidelines (either above or below) may be rendered.

(d) The guidelines contain instructions for the rating of certain offense behaviors. However, especially mitigating or aggravating circumstances in a particular case may justify a decision or a severity rating different from that listed.

(e) An evaluation sheet containing a ''salient factor score'' serves as an aid in determining the parole prognosis (potential risk of parole violation). However, where circumstances warrant, clinical evaluation of risk may override this predictive aid.

(f) Guidelines for reparole consideration are set forth at § 2.21.

(g) The Commission shall review the guidelines, including the salient factor score, periodically and may revise or modify them at any time as deemed appropriate.

(h) If an offender was less than 18 years of age at the time of the current offense, such youthfulness shall, in itself, be considered as a mitigating factor.

(i) For criminal behavior committed while in confinement see § 2.36 (Rescission Guidelines).

(j)(1) In probation revocation cases, the original federal offense behavior and any new criminal conduct on probation (federal or otherwise) is considered in assessing offense severity. The original federal conviction is also counted in the salient factor score as a prior conviction. Credit is given toward the guidelines for any time spent in confinement on any offense considered in assessing offense severity.

(2) Exception: Where probation has been revoked on a complex sentence (i.e., a committed sentence of more than six months on one count or more of an indictment or information followed by a probation term on other count(s) of an indictment or information), the case shall be considered for guideline purposes under § 2.21 as if parole rather than probation had been revoked.

GUIDELINES FOR DECISIONMAKING

[Guidelines for decisionmaking, customary total time to be served before release (including jail time)]

Offense characteristics: Severity of offense behavior	Offender characteristics: Parole prognosis (salient factor score 1998)			
	Very good (10 to 8)	Good (7 to 6)	Fair (5 to 4)	Poor (3 to 0)
	Guideline range (months)			
Category:				
1	≤=4	≤=8	8–12	12–16
2	≤=6	≤=10	12–16	16–22
3	≤=10	12–16	18–24	24–32
4	12–18	20–26	26–34	34–44
5	24–36	36–48	48–60	60–72
6	40–52	52–64	64–78	78–100
7	52–80	64–92	78–110	100–148
8 [1]	100+	120+	150+	180+

[1] Note: For Category Eight, no upper limits are specified due to the extreme variability of the cases within this category. For decisions exceeding the lower limit of the applicable guideline category by more than 48 months, the Commission will specify the pertinent case factors upon which it relied in reaching its decision, which may include the absence of any factors mitigating the offense. This procedure is intended to ensure that the prisoner understands that individualized consideration has been given to the facts of the case, and not to suggest that a grant of parole is to be presumed for any class of Category Eight offenders. However, a murder committed to silence a victim or witness, a contract murder, a murder by torture, the murder of a law enforcement officer to carry out an offense, or a murder committed to further the aims of an on-going criminal operation, shall not justify a grant of parole at any point in the prisoner's sentence unless there are compelling circumstances in mitigation (*e.g.,* a youthful offender who participated in a murder planned and executed by his parent). Such aggravated crimes are considered, by definition, at the extreme high end of Category Eight offenses. For these cases, the expiration of the sentence is deemed to be a decision at the maximum limit of the guideline range. (The fact that an offense does not fall under the definition contained herein does not mean that the Commission is obliged to grant a parole.)

U.S. PAROLE COMMISSION OFFENSE BEHAVIOR SEVERITY INDEX

Chapter One Offenses of General Applicability
Chapter Two Offenses Involving the Person
- Subchapter A—Homicide Offenses
- Subchapter B—Assault Offenses
- Subchapter C—Kidnaping and Related Offenses
- Subchapter D—Sexual Offenses
- Subchapter E—Offenses Involving Aircraft
- Subchapter F—Communication of Threats

Chapter Three Offenses Involving Property
- Subchapter A—Arson and Property Destruction Offenses
- Subchapter B—Criminal Entry Offenses
- Subchapter C—Robbery, Extortion, and Blackmail
- Subchapter D—Theft and Related Offenses
- Subchapter E—Counterfeiting and Related Offenses
- Subchapter F—Bankruptcy Offenses
- Subchapter G—Violations of Securities or Investment Regulations and Antitrust Offenses

Chapter Four Offenses Involving Immigration, Naturalization, and Passports
Chapter Five Offenses Involving Revenue
Subchapter A—Internal Revenue Offenses
Subchapter B—Customs Offenses
Subchapter C—Contraband Cigarettes
Chapter Six Offenses Involving Governmental Process
Subchapter A—Impersonation of Officials
Subchapter B—Obstructing Justice
Subchapter C—Official Corruption
Chapter Seven Offenses Involving Individual Rights
Subchapter A—Offenses Involving Civil Rights
Subchapter B—Offenses Involving Privacy
Chapter Eight Offenses Involving Explosives and Weapons
Subchapter A—Explosives and Other Dangerous Articles
Subchapter B—Firearms
Chapter Nine Offenses Involving Illicit Drugs
Subchapter A—Heroin and Opiate Offenses
Subchapter B—Marihuana and Hashish Offenses
Subchapter C—Cocaine Offenses
Subchapter D—Other Illicit Drug Offenses
Chapter Ten Offenses Involving National Defense
Subchapter A—Treason and Related Offenses
Subchapter B—Sabotage and Related Offenses
Subchapter C—Espionage and Related Offenses
Subchapter D—Selective Service Offenses
Subchapter E—Other National Defense Offenses
Chapter Eleven Offenses Involving Organized Criminal Activity, Gambling, Obscenity, Sexual Exploitation of Children, Prostitution, and Non-Governmental Bribery
Subchapter A—Organized Crime Offenses
Subchapter B—Gambling Offenses
Subchapter C—Obscenity
Subchapter D—Sexual Exploitation of Children
Subchapter E—Prostitution and White Slave Traffic
Subchapter F—Non-Governmental Bribery
Subchapter G—Currency Offenses
Chapter Twelve Miscellaneous Offenses
Chapter Thirteen General Notes and Definitions
Subchapter A—General Notes
Subchapter B—Definitions

CHAPTER ONE OFFENSES OF GENERAL APPLICABILITY

101 *Conspiracy*

Grade conspiracy in the same category as the underlying offense.

102 *Attempt*

Grade attempt in the same category as the offense attempted.

103 *Aiding and Abetting*

Grade aiding and abetting in the same category as the underlying offense.

104 *Accessory After the Fact*

Grade accessory after the fact as two categories below the underlying offense, but not less than Category One.

105 *Solicitation to Commit a Crime of Violence*

Grade solicitation to commit a crime of violence in the same category as the underlying offense if the crime solicited would be graded as Category Eight. In all other cases grade solicitation to commit a crime of violence one category below the underlying offense, but not less than Category One.

NOTE TO CHAPTER ONE: The reasons for a conspiracy or attempt not being completed may, where the circumstances warrant, be considered as a mitigating factor (e.g., where there is voluntary withdrawal by the offender prior to completion of the offense).

CHAPTER TWO OFFENSES INVOLVING THE PERSON

SUBCHAPTER A—HOMICIDE OFFENSES

201 *Murder*

Murder, or a forcible felony* resulting in the death of a person other than a participating offender, shall be graded as Category Eight.

202 *Voluntary Manslaughter*

Category Seven.

203 *Involuntary Manslaughter*

Category Four.

SUBCHAPTER B—ASSAULT OFFENSES

211 *Assault During Commission of Another Offense*

(a) If serious bodily injury* results or if 'serious bodily injury is the result intended'*, grade as Category Seven;

(b) If bodily injury* results, or a weapon is fired by any offender, grade as Category Six;

(c) Otherwise, grade as Category Five.

212 *Assault*

(a) If serious bodily injury* results or if 'serious bodily injury is the result intended'*, grade as Category Seven;

(b) If bodily injury* results or a dangerous weapon is used by any offender, grade as Category Five;

(c) Otherwise, grade as Category Two;

(d) *Exception:* (1) If the victim was known to be a ''protected person''* or law enforcement, judicial, or correctional official, grade conduct under (a) as Category Seven, (b) as Category six, and (c) as Category Three.

(2) If an assault is committed while resisting an arrest or detention initiated by a law enforcement officer or a civilian acting under color of law, grade conduct under (a)

*Terms marked by an asterisk are defined in Chapter Thirteen.

as Category Seven, (b) as Category Six, and (c) as Category Three.

213 *Firing a Weapon at a Structure Where Occupants are Physically Present*

Grade according to the underlying offense if one can be established, but not less than Category Five.

SUBCHAPTER C—KIDNAPING AND RELATED OFFENSES

221 *Kidnaping*

(a) If the purpose of the kidnaping is for ransom or terrorism, grade as Category Eight;

(b) If a person is held hostage in a known place for purposes of extortion (e.g., forcing a bank manager to drive to a bank to retrieve money by holding a family member hostage at home), grade as Category Seven;

(c) If a victim is used as a shield or hostage in a confrontation with law enforcement authorities, grade as Category Seven;

(d) Otherwise, grade as Category Seven.

(e) *Exception:* If not for ransom or terrorism, and no bodily injury to victim, and limited duration (e.g., abducting the driver of a truck during a hijacking and releasing him unharmed within an hour), grade as Category Six.

222 *Demand for Ransom*

(a) If a kidnapping has, in fact, occurred, but it is established that the offender was not acting in concert with the kidnapper(s), grade as Category Seven;

(b) If no kidnapping has occurred, grade as ''extortion''.

SUBCHAPTER D—SEXUAL OFFENSES

231 *Rape or Forcible Sodomy*

(a) Category Seven.

(b) *Exception:* If a prior consensual sexual relationship between victim and offender is present, grade as Category Six.

232 *Carnal Knowledge* or Sodomy Involving Minors*

(a) Grade as Category Four, except as provided below.

(b) If the relationship is clearly consensual and the victim is at least fourteen years old, and the age difference between the victim and offender is less than four years, grade as Category One.

(c) If the victim is less than twelve years old, grade as Category Seven.

(d) If the offender is an adult who has abused a position of trust (*e.g.*, teacher, counselor, or physician), or the offense involved predatory sexual behavior, grade as Category Seven. Sexual behavior is deemed predatory when the offender repeatedly uses any trick or other device to attract, lure, or bribe victims into the initial contact that results in the offense.

233 *Other Unlawful Sexual Conduct With Minors*

(a) Category Four

(b) Exception: If the victim is less than twelve years old grade as Category Six.

SUBCHAPTER E—OFFENSES INVOLVING AIRCRAFT

241 *Aircraft Piracy*

Category Eight.

242 *Interference with a Flight Crew*

(a) If the conduct or attempted conduct has potential for creating a significant safety risk to an aircraft or passengers, grade as Category Seven.

(b) Otherwise, grade as Category Two.

SUBCHAPTER F—COMMUNICATION OF THREATS

251 *Communicating a Threat [to kill, assault, or kidnap]*

(a) Category Four;

(b) *Notes:*

(1) Any overt act committed for the purposes of carrying out a threat in this subchapter may be considered as an aggravating factor.

(2) If for purposes of extortion or obstruction of justice, grade according to Chapter Three, subchapter C, or Chapter Six, subchapter B, as applicable.

CHAPTER THREE OFFENSES INVOLVING PROPERTY

SUBCHAPTER A—ARSON AND OTHER PROPERTY DESTRUCTION OFFENSES

301 *Property Destruction by Fire or Explosives*

(a) If the conduct results in serious bodily injury* or if 'serious bodily injury is the result intended'*, grade as Category Seven;

(b) If the conduct (i) involves any place where persons are present or likely to be present; or (ii) involves a residence, building, or other structure; or (iii) results in bodily injury*, grade as Category Six;

(c) Otherwise, grade as ''property destruction other than listed above'' but not less than Category Five.

302 *Wrecking a Train*

Category Seven.

303 *Property Destruction Other Than Listed Above*

(a) If the conduct results in bodily injury*, or serious bodily injury*, or if serious bodily injury is the result intended*, grade as if ''assault during commission of another offense;''

(b) If damage of more than $5,000,000 is caused, grade as Category Seven;

(c) If damage of more than $1,000,000 but not more than $5,000,000 is caused, grade as Category Six;

(d) If damage of more than $200,000 but not more than $1,000,000 is caused, grade as Category Five;

*Terms marked by an asterisk are defined in Chapter Thirteen.

(e) If damage of at least $40,000 but not more than $200,000 is caused, grade as Category Four;

(f) If damage of at least $2,000 but less than $40,000 is caused, grade as Category Three;

(g) If damage of less than $2,000 is caused, grade as Category One;

(h) *Exception:* If a significant interruption of a government or public utility function is caused, grade as not less than Category Three.

SUBCHAPTER B—CRIMINAL ENTRY OFFENSES

311 *Burglary or Unlawful Entry*

(a) If the conduct involves an armory or similar facility (e.g., a facility where automatic weapons or war materials are stored) for the purpose of theft or destruction of weapons or war materials, grade as Category Six;

(b) If the conduct involves an inhabited dwelling (whether or not a victim is present), or any premises with a hostile confrontation with a victim, grade as Category Five;

(c) If the conduct involves use of explosives or safecracking, grade as Category Five;

(d) Otherwise, grade as ''theft'' offense, but not less than Category Two.

(e) *Exception:* If the grade of the applicable ''theft'' offense exceeds the grade under this subchapter, grade as a ''theft'' offense.

SUBCHAPTER C—ROBBERY, EXTORTION, AND BLACKMAIL

321 *Robbery*

(a) Category Five.

(b) *Exceptions:*

(1) If the grade of the applicable ''theft'' offense exceeds the grade for robbery, grade as a ''theft'' offense.

(2) If any offender forces a victim to accompany any offender to a different location, or if a victim is forcibly detained by being tied, bound, or locked up, grade as Category Six.

(3) Pickpocketing (stealth—no force or fear), see subchapter D.

(c) *Note:* Grade purse snatching (fear or force) as robbery.

322 *Extortion*

(a) If by threat of physical injury to person or property, or extortionate extension of credit (loansharking), grade as Category Five;

(b) If by use of official governmental position, grade according to Chapter Six, subchapter C.

(c) If neither (a) nor (b) is applicable, grade under Chapter Eleven, subchapter F;

323 *Blackmail [threat to injure reputation or accuse of crime]*

Grade as a ''theft'' offense according to the value of the property demanded, but not less than Category Three. Actual damage to reputation may be considered as an aggravating factor.

SUBCHAPTER D—THEFT AND RELATED OFFENSES

331 *Theft, Forgery, Fraud, Trafficking in Stolen Property*, Interstate Transportation of Stolen Property, Receiving Stolen Property, Embezzlement, and Related Offenses*

(a) If the value of the property* is more than $5,000,000, grade as Category Seven;

(b) If the value of the property* is more than $1,000,000 but not more than $5,000,000, grade as Category Six;

(c) If the value of the property* is more than $200,000 but not more than $1,000,000, grade as Category Five;

(d) If the value of the property* is at least $40,000 but not more than $200,000, grade as Category Four;

(e) If the value of the property* is at least $2,000 but less than $40,000, grade as Category Three;

(f) If the value of the property* is less than $2,000, grade as Category One.

(g) *Exceptions:*

(1) Offenses involving stolen checks, credit cards, money orders or mail, forgery, fraud, interstate transportation of stolen or forged securities, trafficking in stolen property, or embezzlement shall be graded as not less than Category Two;

(2) Theft of an automobile shall be graded as no less than Category Three. Note: where the vehicle was recovered within 72 hours with no significant damage and the circumstances indicate that the only purpose of the theft was temporary use (e.g., joyriding), such circumstances may be considered as a mitigating factor.

(3) Grade obtaining drugs for own use by a fraudulent or fraudulently obtained prescription as Category Two.

(4) Grade manufacture, sale, and fraudulent use of credit cards as follows:

(i) Grade the manufacture, distribution or possession of counterfeit or altered credit cards as not less than Category Four.

(ii) Grade the distribution or possession of multiple stolen credit cards as not less than Category Three.

(iii) Grade the distribution or possession of a single stolen credit card as not less than Category Two.

(h) *Note:* In ''theft'' offenses, the total amount of the theft committed or attempted by the offender, or others acting in concert with the offender, is to be used.

(2) Grade fraudulent sale of drugs (e.g., sale of sugar as heroin) as 'fraud'.

332 *Pickpocketing [stealth-no force or fear]*

Grade as a ''theft'' offense, but not less than Category Three.

333 *Fraudulent Loan Applications*

Grade as a ''fraud'' offense according to the amount of the loan.

---

*Terms marked by an asterisk are defined in Chapter Thirteen.

334 *Preparation or Possession of Fraudulent Documents*

(a) If for purposes of committing another offense, grade according to the offense intended;

(b) Otherwise, grade as Category Two.

335 *Criminal Copyright Offenses*

(a) If very large scale (e.g., more than 100,000 sound recordings or more than 10,000 audio visual works), grade as Category Five;

(b) If large scale (e.g., 20,000–100,000 sound recordings or 2,000–10,000 audio visual works), grade as Category Four;

(c) If medium scale (e.g., 2,000–19,999 sound recordings or 200–1,999 audio visual works), grade as Category Three;

(d) If small scale (e.g., less than 2,000 sound recordings or less than 200 audio visual works), grade as Category Two.

Subchapter E—Counterfeiting and Related Offenses

341 *Passing or Possession of Counterfeit Currency or Other Medium of Exchange**

(a) If the face value of the currency or other medium of exchange is more than $5,000,000, grade as Category Seven;

(b) If the face value of the currency or other medium of exchange is more than $1,000,000 but not more than $5,000,000, grade as Category Six;

(c) If the face value is more than $200,000 but not more than $1,000,000, grade as Category Five;

(d) If the face value is at least $40,000 but not more than $200,000, grade as Category Four;

(e) If the face value is at least $2,000 but less than $40,000, grade as Category Three;

(f) If the face value is less than $2,000, grade as Category Two.

342 *Manufacture of Counterfeit Currency or Other Medium of Exchange* or Possession of Instruments for Manufacture*

Grade manufacture or possession of instruments for manufacture (e.g., a printing press or plates) according to the quantity printed (see passing or possession)), but not less than Category Five. The term *manufacture* refers to the capacity to print or generate multiple copies; it does not apply to pasting together parts of different notes.

Subchapter F—Bankruptcy Offenses

351 *Fraud in Bankruptcy or Concealing Property*

Grade as a ''fraud'' offense.

Subchapter G—Violation of Securities or Investment Regulations and Antitrust Offenses

361 *Violation of Securities or Investment Regulations*

(a) If for purposes of fraud, grade according to the underlying offense;

(b) Otherwise, grade as Category Two.

362 *Antitrust Offenses*

(a) If estimated economic impact is more than one million dollars, grade as Category Four;

(b) If the estimated economic impact is more than $100,000 but not more than one million dollars, grade as Category Three;

(c) Otherwise, grade as Category Two.

(d) *Note:* The term 'economic impact' refers to the estimated loss to any victims (e.g., loss to consumers from a price fixing offense).

363 *Insider Trading*

(a) If the estimated economic impact is more than $5,000,000, grade as Category Seven;

(b) If the estimated economic impact is more than $1,000,000 but not more than $5,000,000, grade as Category Six;

(c) If the estimated economic impact is more than $200,000 but not more than $1,000,000, grade as Category Five;

(d) If the estimated economic impact is at least $40,000 but not more than $200,000, grade as Category Four;

(e) If the estimated economic impact is at least $2,000 but less than $40,000, grade as Category Three;

(f) If the estimated economic impact is less than $2,000, grade as Category Two.

(g) NOTE: The term 'economic impact' includes the damage sustained by the victim whose information was unlawfully used, plus any other illicit profit resulting from the offense.

CHAPTER FOUR OFFENSES INVOLVING IMMIGRATION, NATURALIZATION, AND PASSPORTS

401 *Unlawfully Entering the United States as an Alien*

Category One.

402 *Transportation of Unlawful Alien(s)*

(a) If the transportation of unlawful alien(s) involves detention and demand for payment, grade as Category Five;

(b) Otherwise, grade as Category Three.

403 *Offenses Involving Passports*

(a) If making an unlawful passport for distribution to another, possession with intent to distribute, or distribution of an unlawful passport, grade as Category Three;

(b) If fraudulently acquiring or improperly using a passport, grade as Category Two.

404 *Offenses Involving Naturalization or Citizenship Papers*

(a) If forging or falsifying naturalization or citizenship papers for distribution to another, possession with intent to distribute, or distribution, grade as Category Three;

(b) If acquiring fraudulent naturalization or citizenship papers for own use or improper use of such papers, grade as Category Two;

(c) If failure to surrender canceled naturalization or citizenship certificate(s), grade as Category One.

CHAPTER FIVE OFFENSES INVOLVING REVENUE

Subchapter A—Internal Revenue Offenses

501 *Tax Evasion [income tax or other taxes]*

(a) If the amount of tax evaded or evasion attempted is more than $5,000,000, grade as Category Seven;

(b) If the amount of tax evaded or evasion attempted is more than $1,000,000 but not more than $5,000,000, grade as Category Six;

(c) If the amount of tax evaded or evasion attempted is more than $200,000 but not more than $1,000,000, grade as Category Five;

(d) If the amount of tax evaded or evasion attempted is at least $40,000 but not more than $200,000, grade as Category Four;

(e) If the amount of tax evaded or evasion attempted is at least $2,000 but less than $40,000, grade as Category Three;

(f) If the amount of tax evaded or evasion attempted is less than $2,000, grade as Category One.

(g) *Notes:*

(1) Grade according to the amount of tax evaded or evasion attempted, not the gross amount of income.

(2) Tax evasion refers to failure to pay applicable taxes. Grade a false claim for a tax refund (where tax has not been withheld) as a ''fraud'' offense.

502 *Operation of an Unregistered Still*

Grade as a ''tax evasion'' offense.

Subchapter B—Customs Offenses

511 *Smuggling Goods into the United States*

(a) If the conduct is for the purpose of tax evasion, grade as a 'tax evasion' offense.

(b) If the article is prohibited from entry to the country absolutely (e.g., illicit drugs or weapons), use the grading applicable to possession with intent to distribute of such articles, or the grading applicable to tax evasion, whichever is higher, but not less than Category Two;

(c) If the conduct involves breaking seals, or altering or defacing customs marks, or concealing invoices, grade according to (a) or (b), as applicable, but not less than Category Two.

512 *Smuggling Goods into Foreign Countries in Violation of Foreign Law* (re: 18 U.S.C. 546)

Category Two.

Subchapter C—Contraband Cigarettes

521 *Trafficking in Contraband Cigarettes* (re: 18 U.S.C. 2342)

Grade as a tax evasion offense.

CHAPTER SIX OFFENSES INVOLVING GOVERNMENTAL PROCESS

Subchapter A—Impersonation of Officials

601 *Impersonation of Official*

(a) If for purposes of commission of another offense, grade according to the offense attempted, but not less than Category Two;

(b) Otherwise, grade as Category Two.

Subchapter B—Obstructing Justice

611 *Perjury*

(a) If the perjured testimony concerns a criminal offense, grade as accessory after the fact, but not less than Category Three;

(b) *Otherwise*, grade as Category Three.

(c) Suborning perjury, grade as perjury.

612 *Unlawful False Statements Not Under Oath*

Category One.

613 *Tampering With Evidence or Witness, Victim, Informant or Juror*

(a) If concerning a criminal offense, grade as accessory after the fact, but not less than Category Three.

(b) Otherwise, grade as Category Three.

(c) *Exception:* Intimidation by threat of physical harm, grade as not less than Category Five.

614 *Misprision of a Felony**

Grade as if ''accessory after the fact'' but not higher than Category Three.

615 *Harboring a Fugitive*

Grade as if 'accessory after the fact' to the offense for which the fugitive is wanted, but not higher than Category Three.

616 *Escape*

If in connection with another offense for which a severity rating can be assessed, grade the underlying offense and apply the rescission guidelines to determine an additional penalty. Otherwise, grade as Category Three.

617 *Failure To Appear**

(a) In Felony Proceedings. If in connection with an offense for which a severity rating can be assessed, add to the guidelines otherwise appropriate the following: (i) ≤ 6 months if voluntary return within 6 days, or (ii) 6–12 months in any other case. Otherwise, grade as Category Three.

(b) In Misdemeanor Proceedings. Grade as Category One.

(c) *Note:* For purposes of this subsection, a misdemeanor is defined as an offense for which the maximum penalty authorized by law (not necessarily the penalty actually imposed) does not exceed one year.

618 *Contempt of Court*

(a) Criminal Contempt (re: 18 U.S.C. 402). Where imposed in connection with a prisoner serving a sentence for another offense, add <<=6 months to the guidelines otherwise appropriate.

(b) *Exception:* If a criminal sentence is imposed under 18 U.S.C. 401 for refusal to testify concerning a criminal offense, grade such conduct as if accessory after the fact.

(c) Civil Contempt. See 28 CFR 2.10.

Subchapter C—Official Corruption

621 *Bribery or Extortion [use of official position—no physical threat]*

(a)Grade as a ''theft offense'' according to the value of the bribe demanded or received, or the favor received by the bribe-giver (whichever is greater), but not less than Category Three. The ''favor received'' is the gross value of the property, contract, obligation, interest, or payment intended to be awarded to the bribe-giver in return for the bribe. Grade the bribe-taker in the same manner.

(b) If the above conduct involves a pattern of corruption (e.g., multiple instances), grade as not less than Category Four.

(c) If the purpose of the conduct is the obstruction of justice, grade as if ''perjury''.

(d) *Notes:*

(1) The grading in this subchapter applies to each party to a bribe.

(2) The extent to which the criminal conduct involves a breach of public trust, causing injury beyond that describable by monetary gain, may be considered as an aggravating factor.

622 *Other Unlawful Use of Governmental Position*

Category Two.

Subchapter D—Voting Fraud

631 *Voting Fraud*

Category Four.

CHAPTER SEVEN OFFENSES INVOLVING INDIVIDUAL RIGHTS

Subchapter A—Offenses Involving Civil Rights

701 *Conspiracy Against Rights of Citizens* (re: 18 U.S.C. 241)

(a) If death results, grade as Category Eight;

(b) Otherwise, grade as if ''assault''.

702 *Deprivation of Rights Under Color of Law* (re: 18 U.S.C. 242)

(a) If death results, grade as Category Eight;

(b) Otherwise, grade as if ''assault''.

703 *Federally Protected Activity* (re: 18 U.S.C. 245)

(a) If death results, grade as Category Eight;

(b) Otherwise, grade as if ''assault''.

704 *Intimidation of Persons in Real Estate Transactions Based on Racial Discrimination* (re: 42 U.S.C. 3631)

(a) If death results, grade as Category Eight;

(b) Otherwise, grade as if ''assault''.

705 *Transportation of Strikebreakers* (re: 18 U.S.C. 1231)

Category Two.

Subchapter B—Offenses Involving Privacy

711 *Interception and Disclosure of Wire or Oral Communications* (re: 18 U.S.C. 2511)

Category Two.

712 *Manufacture, Distribution, Possession, and Advertising of Wire or Oral Communication Intercepting Devices* (re: 18 U.S.C. 2512)

(a) *Category* Three.

(b) *Exception:* If simple possession, grade as Category Two.

713 *Unauthorized Opening of Mail*

Category Two.

CHAPTER EIGHT OFFENSES INVOLVING EXPLOSIVES AND WEAPONS

Subchapter A—Explosives Offenses and Other Dangerous Articles

801 *Unlawful Possession or Distribution of Explosives; or Use of Explosives During a Felony*

Grade according to offense intended, but not less than Category Five.

802 *Mailing Explosives or Other Injurious Articles With Intent To Commit a Crime*

Grade according to offense intended, but not less than Category Five.

Subchapter B—Firearms

811 *Possession by Prohibited Person* (e.g., ex-felon)

(a) If single weapon (rifle, shotgun, or handgun) with ammunition of the same caliber, or ammunition of a single caliber (without weapon), grade as Category Three;

(b) If multiple weapons (rifles, shotguns, or handguns), or ammunition of different calibers, or single weapon and ammunition of a different caliber, grade as Category Four.

812 *Unlawful Possession or Manufacture of Sawed-off Shotgun, Machine Gun, Silencer, or ''Assassination kit''*

(a) If silencer or ''assassination kit'', grade as Category Six;

(b) If sawed-off shotgun or machine gun, grade as Category Five.

813 *Unlawful Distribution of Weapons or Possession With Intent To Distribute*

(a) If silencer(s) or ''assassination kit(s)'', grade as Category Six;

(b) If sawed-off shotgun(s) or machine gun(s), grade as Category Five;

(c) If multiple weapons (rifles, shotguns, or handguns), or ammunition of different calibers, or single weapon and ammunition of a different caliber, grade as Category Four;

(d) If single weapon (rifle, shotgun, or handgun) with ammunition of the same caliber, or ammunition of a single caliber (without weapon), grade as Category Three.

CHAPTER NINE OFFENSES INVOLVING ILLICIT DRUGS

Subchapter A—Heroin and Opiate* Offenses

901 *Distribution or Possession With Intent To Distribute*

(a) If extremely large scale (e.g., involving 3 kilograms or more of 100% pure heroin, or equivalent amount), grade as Category Eight [except as noted in (c) below];

(b) if very large scale (e.g., involving 1 kilogram but less than 3 kilograms of 100% pure heroin, or equivalent amount), grade as Category Seven [except as noted in (c) below];

(c) Where the Commission finds that the offender had only a peripheral role*, grade conduct under (a) or (b) as Category Six;

(d) If large scale (e.g., involving 50–999 grams of 100% pure heroin, or equivalent amount), grade as Category Six [except as noted in (e) below];

(e) Where the Commission finds that the offender had only a peripheral role*, grade conduct under (d) as Category Five.

(f) If medium scale (e.g., involving 5–49 grams of 100% pure heroin, or equivalent amount), grade as Category Five;

(g) If small scale (e.g., involving less than 5 grams of 100% pure heroin, or equivalent amount), grade as Category Four;

902 *Simple Possession*

Category One.

Subchapter B—Marihuana and Hashish Offenses

911 *Distribution or Possession With Intent To Distribute*

(a) If extremely large scale (e.g., involving 20,000 pounds or more of marihuana/6,000 pounds or more of hashish/600 pounds or more of hash oil), grade as Category Six [except as noted in (b) below];

(b) Where the Commission finds that the offender had only a peripheral role, grade* conduct under (a) as Category Five;

(c) If very large scale (e.g., involving 2,000–19,999 pounds of marihuana/600–5,999 pounds of hashish/60–599 pounds of hash oil), grade as Category Five;

(d) If large scale (e.g., involving 200–1,999 pounds of marihuana/60–599 pounds of hashish/6–59.9 pounds of hash oil), grade as Category Four;

(e) If medium scale (e.g., involving 50–199 pounds of marihuana/15–59.9 pounds of hashish/1.5–5.9 pounds of hash oil), grade as Category Three;

(f) If small scale (e.g., involving 10–49 pounds of marihuana/3–14.9 pounds of hashish/.3–1.4 pounds of hash oil), grade as Category Two;

(g) If very small scale (e.g., involving less than 10 pounds of marihuana/less than 3 pounds of hashish/less than .3 pounds of hash oil), grade as Category One.

912 *Simple Possession*

Category One.

Subchapter C—Cocaine Offenses

921 *Distribution or Possession With Intent to Distribute*

(a) If extremely large scale (e.g., involving 15 kilograms or more of 100% purity, or equivalent amount; or 1.5 kilograms or more of freebased cocaine), grade as Category Eight [except as noted in (c) below];

(b) If very large scale (e.g., involving 5 kilograms, but less than 15 kilograms of 100% purity, or equivalent amount; or 500 grams but less than 1.5 kilograms of freebased cocaine), grade as Category Seven [except as noted in (c) below];

(c) Where the Commission finds that the offender had only a peripheral role*, grade conduct under (a) or (b) as Category Six;

(d) If large scale (e.g., involving more than 1 kilogram, but less than 5 kilograms of 100% purity, or equivalent amount; or more than 100 grams, but less than 500 grams of freebased cocaine) grade as Category Six [except as noted in (e) below];

(e) Where the Commission finds that the offender had only a peripheral role, grade conduct under (d) as Category Five;

(f) If medium scale (e.g., involving 100 grams-1 kilogram of 100% purity, or equivalent amount; or 10 grams-100 grams of freebased cocaine), grade as Category Five;

(g) If small scale (e.g., involving 5–99 grams of 100% purity, or equivalent amount; or 1 gram-9.9 grams of freebased cocaine), grade as Category Four;

(h) If very small scale (e.g., involving less than 1.0–4.9 grams of 100% purity, or equivalent amount; or less than 1 gram of freebased cocaine), grade as Category Three;

(i) If extremely small scale (e.g., involving less than 1 gram of 100% purity, or equivalent amount), grade as Category Two.

922 *Simple Possession*

Category One.

Subchapter D—Other Illicit Drug Offenses

931 *Distribution or Possession With Intent To Distribute*

(a) If very large scale (e.g., involving more than 200,000 doses), grade as Category Six [except as noted in (b) below];

(b) Where the Commission finds that the offender had only a peripheral role*, grade conduct under (a) as Category Five;

(c) If large scale (e.g., involving 20,000–200,000 doses), grade as Category Five;

(d) If medium scale (e.g., involving 1,000–19,999 doses), grade as Category Four;

(e) If small scale (e.g., involving 200–999 doses), grade as Category Three;

(f) If very small scale (e.g., involving less than 200 doses), grade as Category Two.

932 *Simple Possession*

Category One.

NOTES TO CHAPTER NINE:

(1) Grade manufacture of synthetic illicit drugs as listed above, but not less than Category Five.

(2) ''Equivalent amounts'' for the cocaine and opiate categories may be computed as follows: 1 gram of 100% pure is equivalent to 2 grams of 50% pure and 10 grams of 10% pure, etc.

(3) Grade unlawful possession or distribution of precursors of illicit drugs as Category Five (i.e., aiding and abetting the manufacture of synthetic illicit drugs).

(4) If weight, but not purity is available, the following grading may be used:

Heroin

Extremely large scale—6 kilograms or more
Very large scale—2–5.99 kilograms
Large scale—200 gms.–1.99 kilograms
Medium scale—28.35–199.99 gms.
Small scale—Less than 28.35 gms.

Cocaine

Extremely large scale—18.75 kilograms or more
Very large scale—6.25–18.74 kilograms
Large scale—1.25–6.24 kilograms
Medium scale—200 gms.–1.24 kilograms
Small scale—20 gms.–199.99 gms.
Very small scale—4 gms.–19.99 gms.
Extremely small scale—Less than 4 gms.

CHAPTER TEN OFFENSES INVOLVING NATIONAL DEFENSE

Subchapter A—Treason and Related Offenses

1001 *Treason*
Category Eight.

1002 *Rebellion or Insurrection*
Category Seven.

Subchapter B—Sabotage and Related Offenses

1011 *Sabotage*
Category Eight.

1012 *Enticing Desertion*
(a) In time of war or during a national defense emergency, grade as Category Four;
(b) Otherwise, grade as Category Three.

1013 *Harboring or Aiding a Deserter*
Category One.

Subchapter C—Espionage and Related Offenses

1021 *Espionage*
Category Eight.

Subchapter D—Selective Service Offenses

1031 *Failure to Register, Report for Examination or Induction*
(a) If committed during time of war or during a national defense emergency, grade as Category Four;
(b) If committed when draftees are being inducted into the armed services, grade as Category Three;
(c) Otherwise, grade as Category One.

Subchapter E—Other National Defense Offenses

1041 *Offenses Involving Nuclear Energy*
Unauthorized production, possession, or transfer of nuclear weapons or special nuclear material or receipt of or tampering with restricted data on nuclear weapons or special nuclear material, grade as Category Eight.

1042 *Violations of Export Administration Act* (50 U.S.C. 2410)
Grade conduct involving ''national security controls'' or ''nuclear nonproliferation controls'' as Category Six.

1043 *Violations of the Arms Control Act* (22 U.S.C. 2278)
(a) Grade conduct involving export of sophisticated weaponry (e.g., aircraft, helicopters, armored vehicles, or ''high technology'' items) as Category Six.
(b) Grade Conduct involving export of other weapons (e.g., rifles, handguns, machine guns, or hand grenades) as if a weapons/explosive distribution offense under Offenses Involving Explosives and Weapons (Chapter Eight).

CHAPTER ELEVEN—OFFENSES INVOLVING ORGANIZED CRIME ACTIVITY, GAMBLING, OBSCENITY, SEXUAL EXPLOITATION OF CHILDREN, PROSTITUTION, NON-GOVERNMENTAL CORRUPTION, AND THE ENVIRONMENT

Subchapter A—Organized Crime Offenses

1101 *Racketeer Influence and Corrupt Organizations* (re: 18 U.S.C. 1961–63)
Grade according to the underlying offense attempted, but not less than Category Five.

1102 *Interstate or Foreign Travel or Transportation in Aid of Racketeering Enterprise* (re: 18 U.S.C. 1952)
Grade according to the underlying offense attempted, but not less than Category Three.

Subchapter B—Gambling Offenses

1111 *Gambling Law Violations—Operating or Employment in an Unlawful Business* (re: 18 U.S.C. 1955)
(a) If large scale operation [e.g., Sports books (estimated daily gross more than $15,000); Horse books (estimated daily gross more than $4,000); Numbers bankers (estimated daily gross more than $2,000); Dice or card games (estimated daily 'house cut' more than $1,000); video gambling (eight or more machines)]; grade as Category Four;
(b) If medium scale operation [e.g., Sports books (estimated daily gross $5,000—$15,000); Horse books (estimated daily gross $1,500—$4,000); Numbers bankers (estimated daily

gross $750—$2,000); Dice or card games (estimated daily 'house cut' $400—$1,000); video gambling (four-seven machines)]; grade as Category Three;

(c) If small scale operation [e.g., Sports books (estimated daily gross less than $5,000); Horse books (estimated daily gross less than $1,500); Numbers bankers (estimated daily gross less than $750); Dice or card games (estimated daily 'house cut' less than $400); video gambling (three or fewer machines)]; grade as Category Two;

(d) *Exception:* Where it is established that the offender had no proprietary interest or managerial role, grade as Category One.

1112 *Interstate Transportation of Wagering Paraphernalia* (re: 18 U.S.C. 1953)

Grade as if 'operating a gambling business'.

1113 *Wire Transmission of Wagering Information* (re: 18 U.S.C. 1084)

Grade as if ''operating a gambling business''.

1114 *Operating or Owning a Gambling Ship* (re: 18 U.S.C. 1082)

Category Three.

1115 *Importing or Transporting Lottery Tickets; Mailing Lottery Tickets or Related Matter* (re: 18 U.S.C. 1301, 1302)

(a) Grade as if ''operating a gambling business'';

(b) *Exception:* If non-commercial, grade as Category One.

Subchapter C—Obscenity

1121 *Mailing, Importing, or Transporting Obscene Matter*

(a) If for commercial purposes, grade as Category Three;

(b) Otherwise, Category One.

1122 *Broadcasting Obscene Language*

Category One.

Subchapter D—Sexual Exploitation of Children

1131 *Sexual Exploitation of Children** (re: 18 U.S.C. 2251, 2252)

(a) Category Six;

(b) *Exception:* Where the Commission finds the offender had only a peripheral role (e.g., a retailer receiving such material for resale but with no involvement in the production or wholesale distribution of such material), grade as Category Five.

Subchapter E—Prostitution and White Slave Traffic

1141 *Interstate Transportation for Commercial Purposes*

(a) If physical coercion, or involving person(s) of age less than 18, grade as Category Six;

(b) Otherwise, grade as Category Four.

1142 *Prostitution*

Category One.

Subchapter F—Non-Governmental Corruption

1151 *Demand or Acceptance of Unlawful Gratuity Not Involving Federal, State, or Local Government Officials*

Grade as if a fraud offense according to (1) the amount of the bribe offered or demanded, or (2) the financial loss to the victim, whichever is higher.

1152 *Sports Bribery*

If the conduct involves bribery in a sporting contest, grade as if a theft offense according to the amount of the bribe, but not less than Category Three.

Subchapter G—Currency Offenses

1161 *Reports on Monetary Instrument Transactions*

(a) If extremely large scale (e.g., the estimated gross amount of currency involved is more than $5,000,000), grade as Category Seven;

(b) If very large scale (e.g., the estimated gross amount of currency involved is more than $1,000,000 but not more than $5,000,000), grade as Category Six;

(c) If large scale (e.g., the estimated gross amount of currency involved is more than $200,000 but not more than $1,000,000), grade as Category Five;

(d) If medium scale (e.g., the estimated gross amount of currency involved is at least $40,000 but not more than $200,000), grade as Category Four;

(e) If small scale (e.g., the estimated gross amount of currency involved is less than $40,000), grade as Category Three.

Subchapter H—Environmental Offenses

1171 *Knowing Endangerment Resulting From Unlawful Treatment, Transportation, Storage, or Disposal of Hazardous Waste* [Re: 42 U.S.C. 6928(e)]

(a) If death results, grade as Category Seven;

(b) If serious bodily injury results, grade as Category Six;

(c) Otherwise, grade as Category Five.

(d) *Note:* Knowing Endangerment requires a finding that the offender knowingly transported, treated, stored, or disposed of any hazardous waste and knew that he thereby placed another person in imminent danger of death or serious bodily injury.

1172 *Knowing Disposal and/or Storage and Treatment of Hazardous Waste Without a Permit; Transportation of Hazardous Waste to an Unpermitted Facility [Re: 42 U.S.C. 6928(d)(1–2)]*

(a) If death results, grade as Category Six;

(b) If (1) serious bodily injury results; or (2) a substantial potential for death or serious bodily injury in the future results; or (3) a substantial disruption to the environment results (e.g., estimated cleanup cost exceeds

$200,000, or a community is evacuated for more than 72 hours), grade as Category Five;

(c) If (1) bodily injury results, or (2) a significant disruption to the environment results (e.g., estimated cleanup costs of $40,000–$200,000, or a community is evacuated for 72 hours or less), grade as Category Four;

(d) Otherwise, grade as Category Three;

(e) *Exception:* Where the offender is a nonmanagerial employee (i.e., a truck driver or loading dock worker) acting under the orders of another person, grade as two categories below the underlying offense, but not less than Category One.

CHAPTER TWELVE MISCELLANEOUS OFFENSES

If an offense behavior is not listed, the proper category may be obtained by comparing the severity of the offense behavior with those of similar offense behaviors listed in Chapters One-Eleven. If, and only if, an offense behavior cannot be graded by reference to Chapters One-Eleven, the following formula may be used as a guide.

Maximum sentence authorized by statute (not necessarily the sentence imposed)	Grading (category)
<< 2 years	1
2 to 3 years	2
4 to 5 years	3
6 to 10 years	4
11 to 20 years	5
21 to 29 years	6
30 years to life	7

CHAPTER THIRTEEN GENERAL NOTES AND DEFINITIONS

Subchapter A—General Notes

1. If an offense behavior can be classified under more than one category, the most serious applicable category is to be used.

2. If an offense behavior involved multiple separate offenses, the severity level may be increased. Exception: in cases graded as Category Seven, multiple separate offenses are to be taken into account by consideration of a decision above the guidelines rather than by increasing the severity level.

(a) In certain instances, the guidelines specify how multiple offenses are to be rated. In offenses rated by monetary loss (e.g., theft and related offenses, counterfeiting, tax evasion) or drug offenses, the total amount of the property or drugs involved is used as the basis for the offense severity rating. In instances not specifically covered in the guidelines, the decision-makers must exercise discretion as to whether or not the multiple offense behavior is sufficiently aggravating to justify increasing the severity rating. The following chart is intended to provide guidance in assessing whether the severity of multiple offenses is sufficient to raise the offense severity level; it is not intended as a mechanical rule.

MULTIPLE SEPARATE OFFENSES

Severity	Points	Severity	Points
Category One	= 1/9	Category Five	= 9
Category Two	= 1/3	Category Six	= 27
Category Three	= 1	Category Seven	= 45
Category Four	= 3		

Examples: 3 Category Five Offense [3×(9)=27]=Category Six, 5 Category Five Offenses [5×(9)=45]=Category Seven, 2 Category Six Offenses [2×(27)=54]=Category Seven

(b) The term 'multiple separate offenses' generally refers to offenses committed at different times. However, there are certain circumstances in which offenses committed at the same time are properly considered multiple separate offenses for the purpose of establishing the offense severity rating. These include (1) unrelated offenses, and (2) offenses involving the unlawful possession of weapons during commission of another offense.

(c) For offenses graded according to monetary value (e.g., theft) and drug offenses, the severity rating is based on the amount or quantity involved and not on the number of separate instances.

(d) Intervening Arrests. Where offenses ordinarily graded by aggregation of value/quantity (e.g., property or drug offenses) are separated by an intervening arrest, grade (1) by aggregation of value/quantity or (2) as multiple separate offenses, whichever results in a higher severity category.

(e) Income Tax Violations Related to Other Criminal Activity. Where the circumstances indicate that the offender's income tax violations are related to failure to report income from other criminal activity (e.g., failure to report income from a fraud offense) grade as tax evasion or according to the underlying criminal activity established, whichever is higher. Do not grade as multiple separate offenses.

3. In cases where multiple sentences have been imposed (whether consecutive or concurrent, and whether aggregated or not) an offense severity rating shall be established to reflect the overall severity of the underlying criminal behavior. This rating shall apply whether or not any of the component sentences have expired.

4. The prisoner is to be held accountable for his own actions and actions done in concert with others; however, the prisoner is not to be held accountable for activities committed by associates over which the prisoner has no control and could not have been reasonably expected to foresee. However, if the prisoner has been convicted of a conspiracy, he must be held accountable for the criminal

activities committed by his co-conspirators, provided such activities were committed in furtherance of the conspiracy and subsequent to the date the prisoner joined the conspiracy, except in the case of an independent, small-scale operator whose role in the conspiracy was neither established nor significant. An offender has an ''established'' role in a conspiracy if, for example, he takes orders to perform a function that assists others to further the objectives of the conspiracy, even if his activities did not significantly contribute to those objectives. For such offenders, however, a ''peripheral role'' reduction may be considered.

5. The following are examples of circumstances that may be considered as aggravating factors: extreme cruelty or brutality to a victim; the degree of permanence or likely permanence of serious bodily injury resulting from the offender's conduct; an offender's conduct while attempting to evade arrest that causes circumstances creating a significant risk of harm to other persons (e.g., causing a high speed chase or provoking the legitimate firing of a weapon by law enforcement officers).

6. The phrase ''may be considered an aggravating/mitigating factor'' is used in this index to provide guidance concerning certain circumstances which may warrant a decision above or below the guidelines. This does not restrict consideration of above or below guidelines decisions only to these circumstances, nor does it mean that a decision above or below the guidelines is mandated in every such case.

Subchapter B—Definitions

1. ''Accessory after the fact'' refers to the conduct of one who, knowing an offense has been committed, assists the offender to avoid apprehension, trial, or punishment (e.g., by assisting in disposal of the proceeds of an offense).

NOTE: Where the conduct consists of concealing an offense by making false statements not under oath, grade as ''misprision of felony''. Where the conduct consists of haboring a fugitive, grade as ''harboring a fugitive''.

2. ''Assassination kit'' refers to a disguised weapon designed to kill without attracting attention. Unlike other weapons such as sawed-off shotguns which can be used to intimidate, assassination kits are intended to be undetectable in order to make the victim and bystanders unaware of the threat. A typical assassination kit is usually, but not always, a firearm with a silencer concealed in a briefcase or similar disguise and fired without showing the weapon.

3. ''Bodily injury'' refers to injury of a type normally requiring medical attention [e.g., broken bone(s), laceration(s) requiring stitches, severe bruises].

4. ''Carnal knowledge'' refers to sexual intercourse with a female who is less than 16 years of age and is not the wife of the offender.

5. ''Extortionate extension of credit'' refers to any extension of credit with respect to which it is the understanding of the creditor and the debtor at the time it is made that delay in making repayment or failure to make repayment could result in the use of violence or other criminal means to cause harm to the person, reputation, or property of any person.

6. ''Failure to appear'' refers to the violation of court imposed conditions of release pending trial, appeal, or imposition or execution of sentence by failure to appear before the court or to surrender for service of sentence.

7. ''Forcible felony'' includes, but shall not be limited to, kidnapping, rape or sodomy, aircraft piracy or interference with a flight crew, arson or property destruction offenses, escape, robbery, extortion, or criminal entry offenses, and attempts to commit such offenses.

8. ''Involuntary manslaughter'' refers to the unlawful killing of a human being without malice in the commission of an unlawful act not amounting to a felony, or in the commission in a unlawful manner, or without due caution and circumspection, of a lawful act which might produce death.

9. ''Misprision of felony'' refers to the conduct of one who, having knowledge of the actual commission of a felony, conceals and does not as soon as possible make known the same to some judge or other person in civil or military authority. The ''concealment'' described above requires an act of commission (e.g., making a false statement to a law enforcement officer).

10. ''Murder'' refers to the unlawful killing of a human being with malice aforethought. ''With malice aforethought'' generally refers to a finding that the offender formed an intent to kill or do serious bodily harm to the victim without just cause or provocation.

11. ''Opiate'' includes heroin, morphine, opiate derivatives, and synthetic opiate substitutes.

12. ''Other illicit drug offenses'' include, but are not limited to, offenses involving the following: amphetamines, hallucinogens, barbiturates, methamphetamines, and phencyclidine (PCP).

13. ''Other medium of exchange'' includes, but is not limited to, postage stamps, governmental money orders, or governmental coupons redeemable for cash or goods.

14. ''Peripheral role'' in drug offenses refers to conduct such as that of a person hired as a deckhand on a marijuana boat, a person hired to help offload marijuana, a person with no special skills hired as a simple courier of drugs on a commercial airline flight, or a person hired as a chauffeur in a drug

transaction. This definition does not include persons with decision-making or supervisory authority, persons with relevant special skills (e.g., a boat captain, chemist, or airplane pilot), or persons who finance such operations. Individuals who transport unusually large amounts of drugs (e.g., 50 kilos of cocaine or more) or who otherwise appear to have a high degree of trust, professionalism, or control will be considered to be ''transporters'' and not ''simple couriers.''

15. ''Protected person'' refers to a person listed in 18 U.S.C. 351 (relating to Members of Congress), 1116 (relating to foreign officials, official guests, and internationally protected persons), or 1751 (relating to presidential assassination and officials in line of succession).

16. ''Serious bodily injury'' refers to injury creating a substantial risk of death, major disability or loss of a bodily function, or disfigurement.

17. ''Serious bodily injury is the result intended'' refers to a limited category of offense behaviors where the circumstances indicate that the bodily injury intended was serious (e.g., throwing acid in a person's face, or firing a weapon at a person) but where it is not established that murder was the intended object. Where the circumstances establish that murder was the intended object, grade as an 'attempt to murder'.

18. ''Sexual exploitation of children'' refers to employing, using, inducing, enticing, or coercing a person less than 18 years of age to engage in any sexually explicit conduct for the purpose of producing a visual or print medium depicting such conduct with knowledge or reason to know that such visual or print medium will be distributed for sale, transported in interstate or foreign commerce, or mailed. It also includes knowingly transporting, shipping, or receiving such visual or print medium for the purposes of distributing for sale, or knowingly distribution for sale such visual or print medium.

19. ''Trafficking in stolen property'' refers to receiving stolen property with intent to sell.

20. The ''value of the property'' is determined by estimating the actual or potential replacement cost to the victim. The ''actual replacement cost'' is the value or money permanently lost to the victim through theft/forgery/fraud. The ''potential replacement cost'' refers to the total loss the offender specifically intended to cause by theft/forgery/fraud, or the total amount of the victim's money or property unlawfully exposed to risk of loss through theft/forgery/fraud notwithstanding subsequent recovery by the victim. The highest of these three values is the value to be used in rating the offense on the guidelines.

21. ''Voluntary manslaughter'' refers to the unlawful killing of a human being without malice upon a sudden quarrel or heat of passion.''

SALIENT FACTOR SCORING MANUAL

The following instructions serve as a guide in computing the salient factor score.

ITEM A. PRIOR CONVICTIONS/ADJUDICATIONS (ADULT OR JUVENILE) [[None = 3; One = 2; Two or three = 1; Four or more. . . . = 0]]

A.1 In General.

(a) Count all convictions/adjudications (adult or juvenile) for criminal offenses (other than the current offense) that were committed prior to the present period of confinement, except as specifically noted.

(b) Convictions for prior offenses that are not separated from each other by an intervening arrest (*e.g.,* two burglaries followed by an arrest for both offenses) are counted as a single prior conviction. Prior offenses that are separated by an intervening arrest are counted separately (*e.g.,* three convictions for larceny and a conviction for an additional larceny committed after the arrest for the first three larcenies would be counted as two prior convictions, even if all the four offenses were adjudicated together).

(c) Do not count the current federal offense or state/local convictions resulting from the current federal offense ((*i.e.,* offenses that are considered in assessing the severity of the current offense). Exception: Where the first and last overt acts of the current offense behavior are separated by an intervening federal conviction (*e.g.,* after conviction for the current federal offense, the offender commits another federal offense while on appeal bond), both offenses are counted in assessing offense severity; the earlier offense is also counted as a prior conviction in the salient factor score.

A.2 *Convictions.* (a) Felony convictions are counted. Non-felony convictions are counted, except as listed under (b) and (c). Convictions for driving while intoxicated/while under the influence/while impaired, or leaving the scene of an accident involving injury or an attended vehicle are counted. For the purpose of scoring Item A of the salient factor score, use the offense of conviction.

(b) Convictions for the following offenses are counted only if the sentence resulting was a commitment of more than thirty days (as defined in item B) or probation of one year or more (as defined in Item E), or if the record indicates that the offense was classified by the jurisdiction as a felony (regardless of sentence):

1. Contempt of court;

2. Disorderly conduct/disorderly person/breach of the peace/disturbing the peace/uttering loud and abusive language;

3. Driving without a license/with a revoked or suspended license/with a false license;

4. False information to a police officer;

5. Fish and game violations;
6. Gambling (e.g., betting on dice, sports, cards) [Note: Operation or promotion of or employment in an unlawful gambling business is not included herein];
7. Loitering;
8. Non-support;
9. Prostitution;
10. Resisting arrest/evade and elude;
11. Trespassing;
12. Reckless driving;
13. Hindering/failure to obey a police officer;
14. Leaving the scene of an accident (except as listed under (a)).

(c) Convictions for certain minor offenses are not counted, regardless of sentence. These include:
1. Hitchhiking;
2. Local regulatory violations;
3. Public intoxication/possession of alcohol by a minor/possession of alcohol in an open container;
4. Traffic violations (except as specifically listed);
5. Vagrancy/vagabond and rogue;
6. Civil contempt.

A.3 *Juvenile Conduct*. Count juvenile convictions/adjudications except as follows:

(a) Do not count any status offense (e.g., runaway, truancy, habitual disobedience) unless the behavior included a criminal offense which would otherwise be counted;

(b) Do not count any criminal offense committed at age 15 or less, unless it resulted in a commitment of more than 30 days.

A.4 *Military Conduct*. Count military convictions by general or special court-martial (not summary court-martial or Article 15 disciplinary proceeding) for acts that are generally prohibited by civilian criminal law (e.g., assault, theft). Do not count convictions for strictly military offenses. *Note:* This does not preclude consideration of serious or repeated military misconduct as a negative indicant of parole prognosis (i.e., a possible reason for overriding the salient factor score in relation to this item).

A.5 *Diversion*. Conduct resulting in diversion from the judicial process without a finding of guilt (*e.g.*, deferred prosecution, probation without plea, or a District of Columbia juvenile consent decree) is not to be counted in scoring this item. However, an instance of criminal behavior resulting in a judicial determination of guilt or an admission of guilt before a judicial body shall be counted as a conviction even if a conviction is not formally entered.

A.6 Setting Aside of Convictions/Restoration of Civil Rights Setting aside or removal of juvenile convictions/adjudications is normally for civil purposes (to remove civil penalties and stigma). Such convictions/adjudications are to be counted for purposes of assessing parole prognosis. This also applies to adult convictions/adjudications which may be set aside by various methods (including pardon). However, convictions/adjudications that were set aside or pardoned on grounds of innocence are not to be counted.

A.7 *Convictions Reversed or Vacated on Grounds of Constitutional or Procedural Error*. Exclude any conviction reversed or vacated for constitutional or procedural grounds, unless the prisoner has been retried and reconvicted. It is the Commission's presumption that a conviction/adjudication is valid, except under the limited circumstances described in the first note below. If a prisoner challenges such conviction he/she should be advised to petition for a reversal of such conviction in the court in which he/she was originally tried, and then to provide the Commission with evidence of such reversal. *Note:* Occasionally the presentence report documents facts clearly indicating that a conviction was unconstitutional for deprivation of counsel [this occurs only when the conviction was for a felony, or for a lesser offense for which imprisonment was actually imposed; and the record is clear that the defendant (1) was indigent, and (2) was not provided counsel, and (3) did not waive counsel]. In such case, do not count the conviction. Similarly, do not count a conviction if: (1) the offender has petitioned the appropriate court to overturn a felony conviction that occurred prior to 1964, or a misdemeanor/petty offense conviction that occurred prior to 1973 (and the offender claims he served a jail sentence for the non-felony conviction); (2) the offender asserts he was denied his right to counsel in the prior conviction; and (3) the offender provides evidence (*e.g.*, a letter from the court clerk) that the records of the prior conviction are unavailable. *Note:* If a conviction found to be invalid is nonetheless supported by persuasive information that the offender committed the criminal act, this information may be considered as a negative indicant of parole prognosis (i.e., a possible reason for overriding the salient factor score).

A.8 *Ancient Prior Record*. If both of the following conditions are met: (1) The offender's only countable convictions under Item A occurred at least ten years prior to the commencement of the current offense behavior (the date of the last countable conviction under Item A refers to the date of the conviction, itself, not the date of the offense leading to conviction), and (2) there is at least a ten year commitment free period in the community (including time on probation or parole) between the last release from a countable commitment (under Item B) and the commencement of the current offense behavior; then convictions/commitments prior to the above ten year period are not to be counted for purposes of Item A, B, or C. *Note:* This provision does not preclude consideration of earlier behavior (e.g., repetition of particularly serious or assaultive conduct) as

a negative indicant of parole prognosis (i.e., a possible reason for overriding the salient factor score). Similarly, a substantial crime free period in the community, not amounting to ten years, may, in light of other factors, indicate that the offender belongs in a better risk category than the salient factor score indicates.

A.9 *Foreign Convictions.* Foreign convictions (for behavior that would be criminal in the United States) are counted.

A.10 *Tribal Court Convictions.* Tribal court convictions are counted under the same terms and conditions as any other conviction.

A.11 *Forfeiture of Collateral.* If the only known disposition is forfeiture of collateral, count as a conviction (if a conviction for such offense would otherwise be counted).

A.12 *Conditional/Unconditional Discharge (New York State).* In N.Y. State, the term ''conditional discharge'' refers to a conviction with a suspended sentence and unsupervised probation; the term ''unconditional discharge'' refers to a conviction with a suspended sentence. Thus, such N.Y. State dispositions for countable offenses are counted as convictions.

A.13 *Adjudication Withheld (Florida).* In Florida, the term ''adjudication withheld'' refers to a disposition in which a formal conviction is not entered at the time of sentencing, the purpose of which is to allow the defendant to retain his civil rights and not to be classified as a convicted felon. Since the disposition of adjudication withheld is characterized by an admission of guilt and/or a finding of guilt before a judicial body, dispositions of ''adjudication withheld'' are to be counted as convictions for salient factor scoring purposes. However, it is not considered a conviction on which forfeiture of street time can be based.

A.14 *Juvenile Consent Decree (District of Columbia).* A juvenile consent decree in the District of Columbia is a diversionary disposition not requiring an admission or finding of guilt. Therefore, it is not to be used in scoring this item.

ITEM B. PRIOR COMMITMENTS OF MORE THAN THIRTY DAYS (ADULT OR JUVENILE) [[None=-2; One or two=1; Three or more=0]]

B.1 Count all prior commitments of more than thirty days (adult or juvenile) resulting from a conviction/adjudication listed under Item A, except as noted below. Also count commitments of more than thirty days imposed upon revocation of probation or parole where the original probation or parole resulted from a conviction/adjudication counted under Item A.

B.2 Count only commitments that were imposed prior to the commission of the last overt act of the current offense behavior. Commitments imposed after the current offense are not counted for purposes of this item. Concurrent or consecutive sentences (whether imposed as the same time or at different times) that result in a continuous period of confinement count as a single commitment. However, a new court commitment of more than thirty days imposed for an escape/attempted escape or for criminal behavior committed while in confinement/escape status counts as a separate commitment.

B.3 *Definitions.* (a) This item only includes commitments that were actually imposed. Do not count a suspended sentence as a commitment. Do not count confinement pending trial or sentencing or for study and observation as a commitment unless the sentence is specifically to ''time served''. If a sentence imposed is subsequently reconsidered and reduced, do not count as a commitment if it is determined that the total time served, including jail time, was 30 days or less. Count a sentence to intermittent confinement (e.g., weekends) totaling more than 30 days.

(b) This item includes confinement in adult or juvenile institutions, community corrections centers, and other residential treatment centers (*e.g.*, halfway houses and community treatment centers). It does not include foster home placement. Count confinement in a community corrections center (CCC) or other residential treatment center only when it is part of a committed sentence. Do not count confinement in a community corrections center or other residential treatment center when imposed as a condition of probation or parole. Do not count self-commitment for drug or alcohol treatment.

(c) If a committed sentence of more than 30 days is imposed prior to the current offense but the offender avoids or delays service of the sentence (*e.g.*, by absconding, escaping, bail pending appeal), count as a prior commitment. NOTE: Where the subject unlawfully avoids service of a prior commitment by escaping or failing to appear for service of sentence, this commitment is also to be considered in Items D and E. Example: An offender is sentenced to a three-year prison term, released on appeal bond, and commits the current offense. Count as a previous commitment under Item B, but not under Items D and E. To be considered under Items D and E, the avoidance of sentence must have been unlawful (*e.g.*, escape or failure to report for service of sentence). Example: An offender is sentenced to a three-year prison term, escapes, and commits the current offense. Count as a previous commitment under Items B, D, and E.

(d) District of Columbia Juvenile Commitment to Department of Human Services. In the District of Columbia, juvenile offenders may be committed to the Department of Human Services for placement ranging from a foster home to a secure juvenile facility. Such a commitment is counted only if it can

be established that the juvenile was actually committed for more than 30 days to a secure juvenile institution or residential treatment center rather than a foster home.

ITEM C. AGE AT COMMENCEMENT OF THE CURRENT OFFENSE/PRIOR COMMITMENTS OF MORE THAN THIRTY DAYS (ADULT OR JUVENILE)

C.1 Score 3 if the subject was 26 years of age or more at the commencement of the current offense and has three or fewer prior commitments.

C.2 Score 2 if the subject was 26 years of age or more at the commencement of the current offense and has four prior commitments.

C.3 Score 1 if the subject was 26 years of age or more at the commencement of the current offense and has five or more prior commitments.

C.4 Score 2 if the subject was 22–25 years of age at the commencement of the current offense and has three or fewer prior commitments.

C.5 Score 1 if the subject was 22–25 years of age at the commencement of the current offense and has four prior commitments.

C.6 Score 0 if the subject was 22–25 years of age at the commencement of the current offense and has five or more prior commitments.

C.7 Score 1 if the subject was 20–21 years of age at the commencement of the current offense and has three or fewer prior commitments.

C.8 Score 0 if the subject was 20–21 years of age at the commencement of the current offense and has four prior commitments.

C.9 Score 0 if the subject was 19 years of age or less at the commencement of the current offense with any number of prior commitments.

C.10 Definitions (a) Use the age of the commencement of the subject's current offense behavior, except as noted under the special instructions for probation/parole/confinement/escape status violators.

(b) Prior commitment is defined under Item B.

ITEM D. RECENT COMMITMENT FREE PERIOD (THREE YEARS)

D.1 Score 1 if the subject has no prior commitments; or if the subject was released to the community from his/her last prior commitment at least three years prior to commencement of his/her current offense behavior.

D.2 Score 0 if the subject's last release to the community from a prior commitment occurred less than three years prior to the current offense behavior; or if the subject was in confinement/escape status at the time of the current offense.

D.3 *Definitions.* (a) Prior commitment is defined under Item B.

(b) Confinement/escape status is defined under Item E.

(c) Release to the community means release from confinement status (e.g., a person paroled through a CTC is released to the community when released from the CTC, not when placed in the CTC).

ITEM E. PROBATION/PAROLE/CONFINEMENT/ESCAPE STATUS VIOLATOR THIS TIME

E.1 Score 1 if the subject was not on probation or parole, nor in confinement or escape status at the time of the current offense behavior; and was not committed as a probation, parole, confinement, or escape status violator this time.

E.2 Score 0 if the subject was on probation or parole or in confinement or escape status at the time of the current offense behavior; or if the subject was committed as a probation, parole, confinement, or escape status violator this time.

E.3 *Definitions.* (a) The term probation/parole refers to a period of federal, state, or local probation or parole supervision. Occasionally, a court disposition such as 'summary probation' or 'unsupervised probation' will be encountered. If it is clear that this disposition involved no attempt at supervision, it will not be counted for purposes of this item. *Note:* Unsupervised probation/parole due to deportation is counted in scoring this item.

(b) The term ''parole'' includes parole, mandatory parole, supervised release, conditional release, or mandatory release supervision (*i.e.*, any form of supervised release).

(c) The term ''confinement/escape status'' includes institutional custody, work or study release, pass or furlough, community corrections center or other residential treatment center confinement (when such confinement is counted as a commitment under Item B), or escape from any of the above.

Item F. Older Offenders.

F.1 Score 1 if the offender was 41 years of age or more at the commencement of the current offense and the total score from Items A-E is 9 or less.

F.2 Score 0 if the offender was less than 41 years of age at the commencement of the current offense or if the total score from Items A-E is 10.

SPECIAL INSTRUCTIONS—PROBATION VIOLATOR THIS TIME

Item A Count the original conviction that led to the sentence of probation as a prior conviction. Do not count the probation revocation as a prior conviction.

Item B Count all prior commitments of more than thirty days which were imposed prior to the behavior resulting in the current probation revocation. If the subject is committed as a probation violator following a 'split sentence' for which more than thirty

days were served, count the confinement portion of the 'split sentence' as a prior commitment. *Note:* The prisoner is still credited with the time served toward the current commitment.

Item C Use the age at commencement of the probation violation, not the original offense.

Item D Count backwards three years from the commencement of the probation violation.

Item E By definition, no point is credited for this item. Exception: A person placed on unsupervised probation (other than for deportation) would not lose credit for this item.

Item F Use the age at commencement of the probation violation, not the original offense.

SPECIAL INSTRUCTIONS—PAROLE OR SUPERVISED RELEASE VIOLATOR THIS TIME

Item A The conviction from which paroled or placed on supervised release counts as a prior conviction.

Item B The commitment from which paroled or released to supervised release (including a prison term ordered for a prior supervised release revocation), counts as a prior commitment.

Item C Use the age at commencement of the violation behavior (including new criminal behavior).

Item D Count backwards three years from the commencement of the violation behavior (including new criminal behavior).

Item E By definition, no point is credited for this item.

Item F Use the age at commencement of the violation behavior (including new criminal behavior).

SPECIAL INSTRUCTIONS—CONFINEMENT/ESCAPE STATUS VIOLATOR WITH NEW CRIMINAL BEHAVIOR IN THE COMMUNITY THIS TIME

Item A The conviction being served at the time of the confinement/escape status violation counts as a prior conviction.

Item B The commitment being served at the time of the confinement/escape status violation counts as a prior commitment.

Item C Use the age at commencement of the confinement/escape status violation.

Item D By definition, no point is credited for this item.

Item E By definition, no point is credited for this item.

Item F Use the age at commencement of the confinement/escape status violation.

(18 U.S.C. 4203(a)(1); 18 U.S.C. 4204(a)(6))

[47 FR 56336, Dec. 16, 1982]

EDITORIAL NOTE: For FEDERAL REGISTER citations affecting § 2.20, see the List of CFR Sections Affected, which appears in the Finding Aids section of the printed volume and on GPO Access.

§ 2.21 Reparole consideration guidelines.

(a)(1) If revocation is based upon administrative violation(s) only, grade the behavior as if a Category One offense under § 2.20.

(2) If a finding is made that the prisoner has engaged in behavior constituting new criminal conduct, the appropriate severity rating for the new criminal behavior shall be calculated. New criminal conduct may be determined either by a new federal, state, or local conviction or by an independent finding by the Commission at revocation hearing. As violations may be for state or local offenses, the appropriate severity level may be determined by analogy with listed federal offense behaviors.

(b) The guidelines for parole consideration specified at 28 CFR 2.20 shall then be applied with the salient factor score recalculated. The conviction and commitment from which the offender was released shall be counted as a prior conviction and commitment.

(c) Time served on a new state or federal sentence shall be counted as time in custody for reparole guideline purposes. This does not affect the computation of the expiration date of the violator term as provided by §§ 2.47(e) and 2.52 (c) and (d).

(d) The above are merely guidelines. A decision outside these guidelines (either above or below) may be made when circumstances warrant.

[50 FR 40368, Oct. 3, 1985, as amended at 68 FR 41529, July 14, 2003]

§ 2.22 Communication with the Commission.

Attorneys, relatives, or interested parties wishing a personal interview to discuss a specific case with a representative of the Commission must submit a written request to the appropriate office setting forth the nature of the information to be discussed. Such interview may be conducted by a Commissioner or assigned staff, and a written summary of each such interview shall be prepared and placed in the prisoner's file.

[43 FR 22707, May 28, 1978]

§ 2.23 Delegation to hearing examiners.

(a) There is hereby delegated to hearing examiners the authority necessary to conduct hearings and to make recommendations relative to the grant or denial of parole or reparole, revocation or reinstatement of parole or mandatory release, and conditions of parole. Any hearing may be conducted by a single examiner or by a panel of examiners. A Executive Hearing Examiner shall function as a hearing examiner for the purpose of obtaining a panel recommendation whenever the Regional Commissioner has not ordered that a hearing be conducted by a panel of two examiners. Notwithstanding the provisions of §§ 2.48 through 2.51, §§ 2.101 through 2.104, and §§ 2.214 through 2.217, there is also delegated to hearing examiners the authority necessary to make a probable cause finding, to determine the location of a revocation hearing, and to determine the witnesses who will attend the hearing, including the authority to issue subpoenas for witnesses and evidence.

(b) The concurrence of two hearing examiners, or of a hearing examiner and the Executive Hearing Examiner, shall be required to obtain a panel recommendation to the Regional Commissioner. A panel recommendation is required in each case decided by a Regional Commissioner after the holding of a hearing.

(c) An examiner panel recommendation consists of two concurring examiner votes. In the event of divergent votes, the case shall be referred to another hearing examiner (or to the Executive Hearing Examiner in the case of a hearing conducted by a panel of examiners) for another vote. If concurring votes do not result from such a referral, the case shall be referred to any available hearing examiner until a panel recommendation is obtained.

(d) A recommendation of a hearing examiner panel shall become an effective Commission decision only upon the Regional Commissioner's approval, and docketing at the regional office.

[44 FR 3408, Jan. 16, 1979, as amended at 45 FR 84052, Dec. 12, 1980; 59 FR 45625, Sept. 2, 1994; 60 FR 51349, Oct. 2, 1995; 66 FR 51302, Oct. 9, 2001]

§ 2.24 Review of panel recommendation by the Regional Commissioner.

(a) Upon review of the examiner panel recommendation, the Regional Commissioner may make the decision by concurring with the panel recommendation. If the Regional Commissioner does not concur, the Regional Commissioner shall refer the case to another Commissioner and the decision shall be made on the concurring votes of two Commissioners.

(b) Upon review of the panel recommendation, the Regional Commissioner may also:

(1) Designate the case for the original jurisdiction of the Commission pursuant to § 2.17, vote on the case, and then refer the case to another Commissioner for further review; or

(2) Remand the case for a rehearing, with the notice of action specifying the purpose of the rehearing.

[68 FR 41529, July 14, 2003]

§ 2.25 Hearings by videoconference.

Parole determination hearings (including rescission hearings), and institutional revocation hearings, may be conducted by a videoconference between the hearing examiner and the prisoner or releasee.

[70 FR 19263, Apr. 13, 2005]

§ 2.26 Appeal to National Appeals Board.

(a)(1) A prisoner or parolee may submit to the National Appeals Board a written appeal of any decision to grant (other than a decision to grant parole on the date of parole eligibility), rescind, deny, or revoke parole, except that any appeal of a Commission decision pursuant to § 2.17 shall be submitted as a petition for reconsideration under § 2.27.

(2) The appeal must be filed on a form provided for that purpose within 30 days from the date of entry of the decision that is the subject of the appeal. The appeal must include an opening paragraph that briefly summarizes the grounds for the appeal. The appellant shall then list each ground separately and concisely explain the reasons supporting each ground. Appeals that do not conform to the above requirements may be returned at the Commission's

discretion, in which case the appellant shall have 30 days from the date the appeal is returned to submit an appeal that complies with the above requirements. The appellant may provide any additional information for the Commission to consider in an addendum to the appeal. Exhibits may be attached to an appeal, but the appellant should not attach exhibits that are copies of documents already in the possession of the Commission. Any exhibits that are copies of documents already in the Commission's files will not be retained by the Commission.

(b)(1) The National Appeals Board may: Affirm the decision of a Regional Commissioner on the vote of a single Commissioner other than the Commissioner who issued the decision from which the appeal is taken; or modify or reverse the decision of a Regional Commissioner, or order a new hearing, upon the concurrence of two Commissioners. The Commissioner first reviewing the case may in his discretion circulate the case for review and vote by the other Commissioners notwithstanding his own vote to affirm the Regional Commissioner's decision. In such event, the case shall be decided by the concurrence of two out of three votes.

(2) All Commissioners serve as members of the National Appeals Board, and it shall in no case be an objection to a decision of the Board that the Commissioner who issued the decision from which an appeal is taken participated as a voting member on appeal.

(c) The National Appeals Board shall act within sixty days of receipt of the appellant's papers, to affirm, modify, or reverse the decision. Decisions of the National Appeals Board shall be final.

(d) If no appeal is filed within thirty days of the date of entry of the original decision, such decision shall stand as the final decision of the Commission.

(e) Appeals under this section may be based upon the following grounds:

(1) That the guidelines were incorrectly applied as to any or all of the following:

(i) Severity rating;

(ii) Salient factor score;

(iii) Time in custody;

(2) That a decision outside the guidelines was not supported by the reasons or facts as stated;

(3) That especially mitigating circumstances (for example, facts relating to the severity of the offense or the prisoner's probability of success on parole) justify a different decision;

(4) That a decision was based on erroneous information, and the actual facts justify a different decision;

(5) That the Commission did not follow correct procedure in deciding the case, and a different decision would have resulted if the error had not occurred;

(6) There was significant information in existence but not known at the time of the hearing;

(7) There are compelling reasons why a more lenient decision should be rendered on grounds of compassion.

(f) Upon the written request of the Attorney General seeking review of a decision of a Regional Commissioner, which is received within 30 days of such decision, the National Appeals Board shall reaffirm, modify, or reverse the Regional Commissioner's decision within 60 days of receipt of the Attorney General's request. The National Appeals Board shall inform the Attorney General and the prisoner to whom the decision applies in writing of its decision and the reasons therefor. In the event the Attorney General submits new and significant information that has not previously been disclosed to the prisoner prior to a hearing under these rules, the National Appeals Board shall act within 60 days to reaffirm, modify or reverse the Regional Commissioner's decision, but shall also remand the case for a new hearing if its decision is adverse to the prisoner. The prisoner shall have disclosure of the new information, and the opportunity to dispute that information under § 2.19(c) of this part. Following the hearing, the case shall be returned to the National Appeals Board, together with a recommendation from the hearing examiner, to render a final Commission decision as to the disposition of the case.

[49 FR 44098, Nov. 2, 1984, as amended at 51 FR 32785, Sept. 16, 1986; 59 FR 40258, Aug. 8, 1994; 61 FR 55743, Oct. 29, 1996; 68 FR 41699, July 15, 2003]

§ 2.27 Petition for reconsideration of original jurisdiction decisions.

(a) A petition for reconsideration may be filed with the Commission in a case decided under the procedure specified in § 2.17 within thirty days of the date of such decision. A form is provided for this purpose. A petition for reconsideration will be reviewed at the next regularly scheduled meeting of the Commission provided the petition is received thirty days in advance of such meeting. A petition received by the Commission less than thirty days in advance of a regularly scheduled meeting will be reviewed at the next regularly scheduled meeting. The previous decision made under § 2.17 may be modified or reversed only by a majority vote of the Commissioners holding office at the time of the review of the petition. If a majority vote is not obtained, the previous decision shall stand. A decision under this rule shall be final.

(b) Attorneys, relatives, and other interested parties who wish to submit written information concerning a petition for reconsideration should send such information to the National Appeals Board, United States Parole Commission, 5550 Friendship Boulevard, Chevy Chase, Maryland 20815. Petitions and all supporting material are to be submitted thirty days in advance of the meeting at which such petitions will be considered.

(c) If no petition for reconsideration is filed within 30 days of the entry of a decision under § 2.17, that decision shall stand as the final decision of the Commission.

[61 FR 13763, Mar. 28, 1996, as amended at 61 FR 55743, Oct. 29, 1996; 68 FR 41530, July 14, 2003]

§ 2.28 Reopening of cases.

(a) *Favorable information.* Upon the receipt of new information of substantial significance favorable to the prisoner, the Regional Commissioner may reopen a case (including an original jurisdiction case), and order a special reconsideration hearing on the next available docket, or modify the previous decision. The advancement of a presumptive release date requires the concurrence of two Commissioners.

(b) *Institutional misconduct.* Consideration of disciplinary infractions and allegations of new criminal conduct occurring after the setting of a parole date are subject to the provisions of § 2.14 (in the case of a prisoner with a presumptive date) and § 2.34 (in the case of a prisoner with an effective date of parole).

(c) *Additional sentences.* If a prisoner receives an additional concurrent or consecutive federal sentence following his initial parole consideration, the Regional Commissioner shall reopen his case for a new initial hearing on the next regularly scheduled docket to consider the additional sentence and reevaluate the case. Such action shall void the previous presumptive or effective release date. However, a new initial hearing is not mandatory where the Commission has previously evaluated the new criminal behavior, which led to the additional federal sentence, at a rescission hearing under 28 CFR 2.34; except where the new sentence extends the mandatory release date for a prisoner previously continued to the expiration of his sentence.

(d) *Conviction after revocation.* Upon receipt of information subsequent to the revocation hearing that a prisoner whose parole has been revoked has sustained a new conviction for conduct while on parole, the Regional Commissioner may reopen the case pursuant to § 2.52(c)(2) for a special reconsideration hearing on the next regularly scheduled docket to consider forfeiture of time spent on parole and such further action as may be appropriate. The entry of a new order shall void any presumptive or effective release date previously established.

(e) *Release planning.* When an effective date of parole has been set by the Commission, release on that date shall be conditioned upon the completion of a satisfactory plan for parole supervision. The appropriate Regional Commissioner may on his own motion reconsider any case prior to release and may reopen and advance or retard an effective parole date for purposes of release planning. Retardation without a hearing may not exceed 120 days.

(f) *New adverse information.* Upon receipt of new and significant adverse information that is not covered by paragraphs (a) through (e) of this section, a Commissioner may refer the case to the National Commissioners with his recommendation and vote to schedule the case for a special reconsideration hearing. Such referral shall automatically retard the prisoner's scheduled release date until a final decision is reached in the case. The decision to schedule a case for a special reconsideration hearing shall be based on the concurrence of two Commissioner votes, including the vote of the referring Commissioner. The hearing shall be conducted in accordance with the procedures set forth in §§ 2.12 and 2.13. The entry of a new order following such hearing shall void the previously established release date.

[44 FR 3406, Jan. 16, 1979, as amended at 46 FR 36138, July 14, 1981; 49 FR 44098, Nov. 2, 1984; 61 FR 55743, Oct. 29, 1996; 68 FR 41529, July 14, 2003]

§ 2.29 Release on parole.

(a) A grant of parole shall not be deemed to be operative until a certificate of parole has been delivered to the prisoner.

(b) An effective date of parole shall not be set for a date more than nine months from the date of the hearing. Residence in a community corrections center as part of a parole release plan generally shall not exceed one hundred and twenty days.

(c) When an effective date of parole falls on a Saturday, Sunday, or legal holiday, the Warden of the appropriate institution shall be authorized to release the prisoner on the first working day preceding such date.

[42 FR 39809, Aug. 5, 1977, as amended at 44 FR 3407, Jan. 16, 1979; 60 FR 51350, Oct. 2, 1995; 68 FR 41530, July 14, 2003]

§ 2.30 False information or new criminal conduct: Discovery after release.

If evidence comes to the attention of the Commission after a prisoner's release that such prisoner has willfully provided false information or misrepresented information deemed significant to his application for parole or has engaged in any criminal conduct during the current sentence prior to the delivery of the parole certificate, the Regional Commissioner may reopen the case pursuant to the procedures of § 2.28(f) and order the prisoner summoned or retaken for hearing pursuant to the procedures of §§ 2.49 and 2.50, as applicable, to determine whether the order of parole should be cancelled.

[47 FR 36635, Aug. 23, 1982]

§ 2.31 Parole to detainers: Statement of policy.

(a) Where a detainer is lodged against a prisoner, the Commission may grant parole if the prisoner in other respects meets the criteria set forth in § 2.18. The presence of a detainer is not in itself a valid reason for the denial of parole.

(b) The Commission will cooperate in working out arrangements for concurrent supervision with other jurisdictions where it is feasible and where release on parole appears to be justified.

§ 2.32 Parole to local or immigration detainers.

(a) When a State or local detainer is outstanding against a prisoner whom the Commission wishes to parole, the Commission may order either of the following:

(1) Parole to the actual physical custody of the detaining authorities only. In this event, release is not to be effected except to the detainer. When such a detainer is withdrawn, the prisoner is not to be released unless and until the Commission makes a new order of parole.

(2) Parole to the actual physical custody of the detaining authorities or an approved plan. In this event, release is to be effected to the community if detaining officials withdraw the detainer or make no effort to assume custody of the prisoner, providing there is an acceptable plan for community supervision.

(b) When the Commission wishes to parole a prisoner subject to a detainer filed by Federal immigration officials, the Commission shall order the following: Parole to the actual physical custody of the immigration authorities or an approved plan. In this event, release is to be effected regardless of whether immigration officials take the

prisoner into custody, providing there is an acceptable plan for community supervision.

(c) As used in this section ''parole to a detainer'' means release to the ''physical custody'' of the authorities who have lodged the detainer. Temporary detention in a jail in the county where the institution of confinement is located does not constitute release on parole to such detainer. If the authorities who lodged the detainer do not take the prisoner into custody for any reason, he shall be returned to the institution to await further order of the Commission.

[43 FR 38822, Aug. 31, 1978, as amended at 44 FR 3409, Jan. 16, 1979; 44 FR 31637, June 1, 1979; 44 FR 34494, June 15, 1979; 47 FR 36635, Aug. 23, 1982]

§ 2.33 Release plans.

(a) A grant of parole is conditioned upon the approval of release plans by the Regional Commissioner. In general, the following factors are considered as elements in the prisoner's release plan:

(1) Availability of legitimate employment and an approved residence for the prospective parolee; and

(2) Availability of necessary aftercare for a parolee who is ill or who requires special care.

(b) Generally, parolees will be released only to the place of their legal residence unless the Commission is satisfied that another place of residence will serve the public interest more effectively or will improve the probability of the applicant's readjustment.

(c) Where the circumstances warrant, the Commission on its own motion, or upon recommendation of the probation officer, may require that an advisor who is a responsible, reputable, and law-abiding citizen living in or near the community in which the releasee will reside be available to the releasee. Such advisor shall serve under the direction of and in cooperation with the probation officer to whom the parolee is assigned.

(d) When the prisoner has an unsatisfied fine or restitution order, a reasonable plan for payment [or performance of services, if so ordered by the court] shall, where feasible, be included in the parole release plan.

[42 FR 39809, Aug. 5, 1977; 42 FR 44234, Sept. 2, 1977, as amended at 50 FR 36422, Sept. 6, 1985; 68 FR 41530, July 14, 2003]

§ 2.34 Rescission of parole.

(a) When an effective date of parole has been set by the Commission, release on that date is conditioned upon continued satisfactory conduct by the prisoner. If a prisoner granted such a date has been found in violation of institution rules by a Discipline Hearing Officer or is alleged to have committed a new criminal act at any time prior to the delivery of the certificate of parole, the Regional Commissioner shall be advised promptly of such information. The prisoner shall not be released until the institution has been notified that no change has been made in the Commission's order to parole. Following receipt of such information, the Regional Commissioner may reopen the case and retard the parole date for up to 90 days without a hearing, or schedule a rescission hearing under this section on the next available docket at the institution or on the first docket following return to a federal institution from a community corrections center or a state or local halfway house.

(b) Upon the ordering of a rescission hearing under this section, the prisoner shall be afforded written notice specifying the information to be considered at the hearing. The notice shall further state that the purpose of the hearing will be to decide whether rescission of the parole date is warranted based on the charges listed on the notice, and shall advise the prisoner of the procedural rights described below.

(c) A hearing before a Discipline Hearing Officer resulting in a finding that the prisoner has committed a violation of disciplinary rules may be relied upon by the Commission as conclusive evidence of institutional misconduct. However, the prisoner will be afforded an opportunity to explain any mitigating circumstances, and to present documentary evidence in mitigation of the misconduct at the rescission hearing.

(d) In the case of allegations of new criminal conduct committed prior to delivery of the parole certificate, the

Commission may consider documentary evidence and/or written testimony presented by the prisoner, arresting authorities, or other persons.

(e) The prisoner may be represented at a rescission hearing by a person of his choice. The function of the prisoner's representative shall be to offer a statement following the discussion of the charges with the prisoner, and to provide such additional information as the hearing examiner may require. However, the hearing examiner may limit or exclude any irrelevant or repetitious statement.

(f) The evidence upon which the rescission hearing is to be conducted shall be disclosed to the prisoner upon request, subject to the exemptions set forth at § 2.55. If the parole grant is rescinded, the Commission shall furnish to the prisoner a written statement of its findings and the evidence relied upon.

[44 FR 3406, Jan. 16, 1979, as amended at 45 FR 59871, Sept. 11, 1980; 47 FR 2313, Jan. 15, 1982; 54 FR 15173, Apr. 17, 1989; 68 FR 41530, July 14, 2003]

§ 2.35 Mandatory release in the absence of parole.

(a) A prisoner shall be mandatorily released by operation of law at the end of the sentence imposed by the court less such good time deductions as he may have earned through his behavior and efforts at the institution of confinement. If released pursuant to 18 U.S.C. 4164, such prisoner shall be released, as if on parole, under supervision until the expiration of the maximum term or terms for which he was sentenced less 180 days. If released pursuant to 18 U.S.C. 4205(f), such prisoner shall remain under supervision until the expiration of the maximum term or terms for which he was sentenced. Insofar as possible, release plans shall be completed before the release of any such prisoner.

(b) It is the Commission's interpretation of the statutory scheme for parole and good time that the only function of good time credits is to determine the point in a prisoner's sentence when, in the absence of parole, the prisoner is to be conditionally released on supervision, as described in subsection (a). Once an offender is conditionally released from imprisonment, either by parole or mandatory release, the good time earned during that period of imprisonment is of no further effect either to shorten the period of supervision or to shorten the period of imprisonment which the offender may be required to serve for violation of parole or mandatory release.

(c) A prisoner committed under the Youth Corrections Act must be initially released conditionally under supervision not later than two years before the expiration of the term imposed by the court.

(d) If the Commission orders a military prisoner who is under the Commission's jurisdiction for an offense committed after August 15, 2001 continued to the expiration of his sentence (or otherwise does not grant parole), the Commission shall place such prisoner on mandatory supervision after release if the Commission determines that such supervision is appropriate to provide an orderly transition to civilian life for the prisoner and to protect the community into which such prisoner is released. The Commission shall presume that mandatory supervision is appropriate for all such prisoners unless case-specific factors indicate that supervision is inappropriate. A prisoner who is placed on mandatory supervision shall be deemed to be released as if on parole, and shall be subject to the conditions of release at § 2.40 until the expiration of the maximum term for which he was sentenced, unless the prisoner's sentence is terminated early by the appropriate military clemency board.

[42 FR 39809, Aug. 5, 1977, as amended at 50 FR 46283, Nov. 7, 1985; 67 FR 67792, Nov. 7, 2002; 68 FR 16720, Apr. 7, 2003]

§ 2.36 Rescission guidelines.

(a) The following guidelines shall apply to the sanctioning of disciplinary infractions or new criminal conduct committed by a prisoner during any period of confinement that is credited to his current sentence (whether before or after sentence is imposed), but prior to his release on parole; and by a parole violator during any period of confinement prior to or following the revocation of his parole (except when such period of confinement has resulted from

initial parole to a detainer). These guidelines specify the customary time to be served for such behavior which shall be added to the time required by the original presumptive or effective date. Credit shall be given towards service of these guidelines for any time spent in custody on a new offense that has not been credited towards service of the original presumptive or effective date. If a new concurrent or consecutive sentence is imposed for such behavior, these guidelines shall also be applied at the initial hearing on such term.

(1) Administrative rule infraction(s) (including alcohol abuse) normally can be adequately sanctioned by postponing a presumptive or effective date by 0–60 days per instance of misconduct, or by 0–8 months in the case of use or simple possession of illicit drugs or refusal to provide a urine sample. Escape or other new criminal conduct shall be considered in accordance with the guidelines set forth below.

(2) *Escape/new criminal behavior in a prison facility* (including a community corrections center). The time required pursuant to the guidelines set forth in paragraphs (a)(2) (i) and (ii) of this section shall be added to the time required by the original presumptive or effective date.

(i) *Escape or attempted escape*—(A) Escape or attempted escape, except as listed below—8–16 months.

(B) If from non-secure custody with voluntary return in 6 days or less—≤ 6 months.

(C) If by fear or force applied to person(s), grade under (ii) but not less than Category Five.

NOTES: (1) If other criminal conduct is committed during the escape or during time spent in escape status, then time to be served for the escape/attempted escape shall be added to that assessed for the other new criminal conduct.

(2) Time in escape status shall not be credited.

(3) Voluntary return is defined as returning voluntarily to the facility or voluntarily turning one's self in to a law enforcement authority as an escapee (not in connection with an arrest on other charges).

(4) Non-secure custody refers to custody with no significant physical restraint [e.g., walkaway from a work detail outside the security perimeter of an institution; failure to return to any institution from a pass or unescorted furlough; or escape by stealth from an institution with no physical perimeter barrier (usually a camp or community corrections center)].

(ii) *Other new criminal behavior in a prison facility*.

Severity rating in the new criminal behavior (from § 2.20)	Guideline range
Category One	<<=8 months.
Category Two	<<=10 months.
Category Three	12–16 months.
Category Four	20–26 months.
Category Five	36–48 months.
Category Six	52–64 months.
Category Seven	64–92 months.
Category Eight	120+ months.

NOTE: Grade unlawful possession of a firearm or explosives in a prison facility, other than a community corrections center, as Category Six. Grade unlawful possession of a firearm in a community corrections center as Category Four. Grade unlawful possession of a dangerous weapon other than a firearm or explosives (e.g., a knife) in a prison facility or community corrections center as Category Three.

(3) *New criminal behavior in the community* (e.g., while on pass, furlough, work release, or on escape). In such cases, the guidelines applicable to reparole violators under § 2.21 shall be applied, using the new offense severity (from § 2.20) and recalculated salient factor score (such score shall be recalculated as if the prisoner had been on parole at the time of the new criminal behavior). The time required pursuant to these guidelines shall be added to the time required by the original presumptive or effective date.

NOTE: Offenses committed in a prison or in a community corrections center that are not limited to the confines of the prison or community corrections center (e.g., mail fraud of a victim outside the prison) are graded as new criminal behavior in the community.

(b) The above are merely guidelines. Where the circumstances warrant, a decision outside the guidelines (above or below) may be rendered provided

specific reasons are given. For example, a substantial period of good conduct since the last disciplinary infraction in cases not involving new criminal conduct may be treated as a mitigating circumstance.

[45 FR 59871, Sept. 11, 1980, as amended at 51 FR 32072, Sept. 9, 1986; 52 FR 5763, Feb. 26, 1987; 52 FR 17399, May 8, 1987; 64 FR 59623, Nov. 3, 1999; 68 FR 41530, July 14, 2003]

§ 2.37 Disclosure of information concerning parolees; Statement of policy.

(a) Information concerning a parolee under the Commission's supervision may be disclosed to a person or persons who may be exposed to harm through contact with that particular parolee if such disclosure is deemed to be reasonably necessary to give notice that such danger exists.

(b) Information concerning parolees may be released by a Chief U.S. Probation Officer to a law enforcement agency (1) as deemed appropriate for the protection of the public or the enforcement of the conditions of parole or (2) pursuant to a request under 18 U.S.C. 4203(e).

(c) Information deemed to be ''public sector'' information may be disclosed to third parties without the consent of the file subject. Public sector information encompasses the following:

(1) Name;

(2) Register number;

(3) Offense of conviction;

(4) Past and current places of incarceration;

(5) Age;

(6) Sentence data on the Bureau of Prisons sentence computation record (BP–5);

(7) Date(s) of parole and parole revocation hearings; and

(8) The decision(s) rendered by the Commission following a parole or parole revocation proceeding, including the dates of continuances and parole dates. An inmate's designated future place of incarceration is not public information.

[47 FR 13521, Mar. 31, 1982, as amended at 52 FR 33408, Sept. 3, 1987; 63 FR 25772, May 11, 1998]

§ 2.38 Community supervision by U.S. Probation Officers.

(a) Pursuant to sections 3655 and 4203(b)(4) of title 18 of the U.S. Code, U.S. Probation Officers shall provide such parole services as the Commission may request. In conformity with the foregoing, probation officers function as parole officers and provide supervision to persons released by parole or as if on parole (mandatory release) under the Commission's jurisdiction.

(b) A parolee may be transferred to a new district of supervision with the permission of the probation officers of both the transferring and receiving district, provided such transfer is not contrary to instructions from the Commission.

[44 FR 3409, Jan. 16, 1979]

§ 2.39 Jurisdiction of the Commission.

(a) Jurisdiction of the Commission over a parolee shall terminate no later than the date of expiration of the maximum term or terms for which he was sentenced, except as provided by § 2.35, § 2.43, or § 2.52.

(b) The parole of any parolee shall run concurrently with the period of parole or probation under any other Federal, State, or local sentence.

(c) Upon the termination of jurisdiction, the Commission shall issue a certificate of discharge to such parolee and to such other agencies as it may determine.

[42 FR 39809, Aug. 5, 1977, as amended at 48 FR 22919, May 23, 1983]

§ 2.40 Conditions of release.

(a) *General conditions of release.* (1) The conditions set forth in § 2.204(a)(3)–(6) apply for the reasons set forth in § 2.204(a)(1). These conditions are printed on the certificate of release issued to each releasee.

(2)(i) The refusal of a prisoner who has been granted a parole date to sign the certificate of release (or any other document necessary to fulfill a condition of release) constitutes withdrawal of that prisoner's application for parole as of the date of refusal. To be considered for parole again, that prisoner must reapply for parole consideration.

(ii) A prisoner who is released to supervision through good-time deduction

who refuses to sign the certificate of release is nevertheless bound by the conditions set forth in that certificate.

(b) *Special conditions of release.* (1) The Commission may impose a condition other than one of the general conditions of release if the Commission determines that such condition is necessary to protect the public from further crimes by the releasee and to provide adequate supervision of the releasee. Examples of special conditions of release that the Commission frequently imposes are found at § 2.204(b)(2).

(2) If the Commission requires the releasee's participation in a drug-treatment program, the releasee must submit to a drug test before release and to at least two other drug tests, as determined by the supervision officer. A decision not to impose this special condition, because available information indicates a low risk of future substance abuse by the releasee, shall constitute good cause for suspension of the drug testing requirements of 18 U.S.C. 4209(a). A grant of parole or reparole is contingent upon the prisoner passing all pre-release drug tests administered by the Bureau of Prisons.

(c) *Changing conditions of release.* The provisions of § 2.204(c) apply.

(d) *Appeal.* A releasee may appeal under § 2.26 an order to impose or modify a release condition not later than 30 days after the date the condition is imposed or modified.

(e) *Application of release conditions to absconder.* The provisions of § 2.204(d) apply.

(f) *Revocation for possession of a controlled substance.* If the Commission finds after a revocation hearing that a releasee, released after December 31, 1988, has possessed a controlled substance, the Commission shall revoke parole or mandatory release. If such a releasee fails a drug test, the Commission shall consider appropriate alternatives to revocation. The Commission shall not revoke parole on the basis of a single, unconfirmed positive drug test, if the releasee challenges the test result and there is no other violation found by the Commission to justify revocation.

(g) *Supervision officer guidance.* The provisions of § 2.204(f) apply.

(h) *Definitions.* For purposes of this section—

(1) The terms *supervision officer, domestic violence crime, approved offender-rehabilitation program* and *firearm,* as used in § 2.204, have the meanings given those terms by § 2.204(g);

(2) The term *releasee,* as used in this section and in § 2.204 means a person convicted of a federal offense who has been released on parole or released through good-time deduction; and

(3) The term *certificate of release,* as used in this section and § 2.204, means the certificate of parole or mandatory release delivered to the prisoner under § 2.29.

[68 FR 41699, July 15, 2003]

§ 2.41 Travel approval.

(a) The probation officer may approve travel outside the district without approval of the Commission in the following situations:

(1) Vacation trips not to exceed thirty days.

(2) Trips, not to exceed thirty days, to investigate reasonably certain employment possibilities.

(3) Recurring travel across a district boundary, not to exceed fifty miles outside the district, for purpose of employment, shopping, or recreation.

(b) Specific advance approval by the Commission is required for all foreign travel, employment requiring recurring travel more than fifty miles outside the district (except employment at offshore locations), and vacation travel outside the district exceeding thirty days. A request for such permission shall be in writing and must demonstrate a substantial need for such travel.

(c) A special condition imposed by the Regional Commissioner prohibiting certain travel shall supersede any general rules relating to travel as set forth above.

[42 FR 39809, Aug. 5, 1977, as amended at 44 FR 3408, Jan. 16, 1979; 48 FR 9247, Mar. 4, 1983; 57 FR 59916, Dec. 17, 1992]

§ 2.42 Probation officer's reports to Commission.

A supervision report shall be submitted by the responsible probation officer to the Commission for each parolee after the completion of 24 months

of continuous supervision and annually thereafter. The probation officer shall submit such additional reports as the Commission may direct.

[51 FR 11017, Apr. 1, 1986]

§ 2.43 Early termination.

(a)(1) Upon its own motion or upon request of the parolee, the Commission may terminate supervision, and thus jurisdiction, over a parolee prior to the expiration of his maximum sentence.

(2) A committed youth offender sentenced to a term of more than one year may not be granted an early termination of jurisdiction earlier than after one year of continuous supervision on parole. When termination of jurisdiction prior to the expiration of sentence is granted in the case of a youth offender, his conviction shall be automatically set aside. A certificate setting aside his conviction shall be issued in lieu of a certificate of termination.

(b) Two years after release on supervision, and at least annually thereafter, the Commission shall review the status of each parolee to determine the need for continued supervision. In calculating such two-year period there shall not be included any period of release on parole prior to the most recent release, nor any period served in confinement on any other sentence. A review will also be conducted whenever early termination is recommended by the supervising probation officer.

(c)(1) Five years after release on supervision, the Commission shall terminate supervision over such parolee unless it is determined, after a hearing conducted in accordance with the procedures prescribed in 18 U.S.C. 4214(a)(2), that such supervision should not be terminated because there is a likelihood that the parolee will engage in conduct violating any criminal law. Such hearing may be conducted by a hearing examiner or other official designated by the Regional Commissioner. In calculating such five-year period, there shall not be included any period of release on parole prior to the most recent release or any period served in confinement on any other sentence.

(2) If supervision is not terminated under paragraph (c)(1) of this section the parolee may request a hearing annually thereafter, and a hearing shall be conducted with respect to termination of supervision not less frequently than biennially.

(3) A parolee may appeal an adverse decision under paragraphs (c)(1) or (c)(2) of this section pursuant to § 2.26 or § 2.27 as applicable.

(d) The Regional Commissioner shall have authority to make decisions under this section pursuant to the guidelines set forth below; except that in the case of a parolee classified under the provisions of § 2.17, an affirmative decision to terminate supervision under paragraph (b) of this section, or a decision to terminate or continue supervision under paragraph (c) of this section shall be made pursuant to the provisions of § 2.17.

(e) *Early termination guidelines.* In determining whether to grant early termination from supervision, the Commission shall apply the following guidelines:

(1) Absent case-specific factors to the contrary, termination of supervision shall be considered indicated when:

(i) A parolee originally classified in the very good risk category (pursuant to § 2.20) has completed two continuous years of supervision free from any indication of new criminal behavior or serious parole violation; and

(ii) A parolee originally classified in other than the very good risk category (pursuant to § 2.20) has completed three continuous years of supervision free from any indication of new criminal behavior or serious parole violation.

NOTE: As used in this section, an indication of new criminal behavior includes a new arrest if supported by substantial evidence of guilt, even if no conviction or parole revocation results.

(2) Decisions to continue the parolee under supervision past the period indicated above may be made where case-specific factors justify a conclusion that continued supervision is needed to protect the public welfare. Such case-specific factors may relate to the current behavior of the parolee (for example, a parolee whose behavior begins to deteriorate as the normally expected time for termination approaches) or to the parolee's background (for example, a parolee with a history of repetitive assaultive conduct or substantial involvement in large scale or organized

criminal activity). In such cases, an additional period of supervision prior to termination of jurisdiction may be warranted.

(3) Decisions to terminate supervision prior to completion of the three year period specified in paragraph (e)(1)(ii) of this section may be made where it appears that the parolee is a better risk than indicated by the salient factor score as originally calculated. However, termination of supervision prior to the completion of two years of difficulty-free supervision will not be granted unless case-specific factors clearly indicate that continued supervision would be counterproductive.

(4) Cases with pending criminal charge(s) shall not be terminated from supervision until disposition of such charge(s) is known.

(5) After five continuous years of supervision, decisions to terminate will be made in accordance with subsection (c) of this rule.

[46 FR 28649, May 28, 1981, as amended at 46 FR 35639, July 10, 1981; 49 FR 44098, Nov. 2, 1984; 50 FR 36424, Sept. 6, 1985; 68 FR 41530, July 14, 2003]

§ 2.44 Summons to appear or warrant for retaking of parolee.

(a) If a parolee is alleged to have violated the conditions of his release, and satisfactory evidence thereof is presented, the Commission or a member thereof may:

(1) Issue a summons requiring the offender to appear for a preliminary interview or local revocation hearing.

(2) Issue a warrant for the apprehension and return of the offender to custody.

A summons or warrant may be issued or withdrawn only by the Commission, or a member thereof.

(b) Any summons or warrant under this section shall be issued as soon as practicable after the alleged violation is reported to the Commission, except when delay is deemed necessary. Issuance of a summons or warrant may be withheld until the frequency or seriousness of violations, in the opinion of the Commission, requires such issuance. In the case of any parolee charged with a criminal offense and awaiting disposition of the charge, issuance of a summons or warrant may be withheld, a warrant may be issued and held in abeyance, or a warrant may be issued and a detainer may be placed.

(c) A summons or warrant may be issued only within the prisoner's maximum term or terms except that in the case of a prisoner released as if on parole pursuant to 18 U.S.C. 4164, such summons or warrant may be issued only within the maximum term or terms, less one hundred eighty days. A summons or warrant shall be considered issued when signed and either—

(1) Placed in the mail or

(2) Sent by electronic transmission to the intended authorities.

(d) The issuance of a warrant under this section operates to bar the expiration of the parolee's sentence. Such warrant maintains the Commission's jurisdiction to retake the parolee either before or after the normal expiration date of the sentence and to reach a final decision as to revocation of parole and forfeiture of time pursuant to § 2.52(c).

(e) A summons or warrant issued pursuant to this section shall be accompanied by a statement of the charges against the parolee, the applicable procedural rights under the Commission's regulations and the possible actions which may be taken by the Commission. A summons shall specify the time and place the parolee shall appear for a revocation hearing. Failure to appear in response to a summons shall be grounds for issuance of a warrant.

[42 FR 39809, Aug. 5, 1977, as amended at 45 FR 84055, Dec. 22, 1980; 54 FR 11688, Mar. 21, 1989; 63 FR 25771, May 11, 1998]

§ 2.45 Same; youth offenders.

(a) In addition to the issuance of a summons or warrant pursuant to § 2.44 of this part, the Commission or a member thereof, when of the opinion that a youth offender will be benefited by further treatment in an institution or other facility, may direct his return to custody or issue a warrant for his apprehension and return to custody.

(b) Upon his return to custody, such youth offender shall be scheduled for a revocation hearing.

§ 2.46 Execution of warrant and service of summons.

(a) Any officer of any Federal correctional institution or any Federal officer authorized to serve criminal process within the United States, to whom a warrant is delivered shall execute such warrant by taking the parolee and returning him to the custody of the Attorney General.

(b) On arrest of the parolee the officer executing the warrant shall deliver to him a copy of the Warrant Application listing the charges against the parolee, the applicable procedural rights under the Commission's regulations and the possible actions which may be taken by the Commission.

(c) If execution of the warrant is delayed pending disposition of local charges, for further investigation, or for some other purpose, the parolee is to be continued under supervision by the probation officer until the normal expiration of the sentence, or until the warrant is executed, whichever first occurs. Monthly supervision reports are to be submitted, and the parolee must continue to abide by all the conditions of release.

(d) A summons to appear at a preliminary interview or revocation hearing shall be served upon the parolee in person by delivering to the parolee a copy of the summons. Service shall be made by any Federal officer authorized to serve criminal process within the United States, and certification of such service shall be returned to the appropriate regional office of the Commission.

[42 FR 39809, Aug. 5, 1977, as amended at 44 FR 3409, Jan. 16, 1979]

§ 2.47 Warrant placed as a detainer and dispositional review.

(a) When a parolee is serving a new sentence in a federal, state or local institution, a parole violation warrant may be placed against him as a detainer.

(1) If the prisoner is serving a new sentence in a federal institution, a revocation hearing shall be scheduled within 120 days of notification of placement of the detainer, or as soon thereafter as practicable, provided the prisoner is eligible for and has applied for an initial hearing on the new sentence, or is serving a new sentence of one year or less. In any other case, the detainer shall be reviewed on the record pursuant to paragraph (a)(2) of this section.

(2) If the prisoner is serving a new sentence in a state or local institution, the violation warrant shall be reviewed by the Regional Commissioner not later than 180 days following notification to the Commission of such placement. The parolee shall receive notice of the pending review, and shall be permitted to submit a written application containing information relative to the disposition of the warrant. He shall also be notified of his right to request counsel under the provisions of § 2.48(b) to assist him in completing this written application.

(b) If the prisoner is serving a new federal sentence, the Regional Commissioner, following a dispositional record review, may:

(1) Pursuant to the general policy of the Commission, let the warrant stand as a detainer and order that the revocation hearing be scheduled to coincide with the initial hearing on the new federal sentence or upon release from the new sentence, whichever comes first;

(2) Withdraw the warrant, and either order reinstatement of the parolee to supervision upon release from confinement or close the case if the expiration date has passed.

(c) If the prisoner is serving a new state or local sentence, the Regional Commissioner, following a dispositional record review may:

(1) Withdraw the detainer and order reinstatement of the parolee to supervision upon release from custody, or close the case if the expiration date has passed.

(2) Order a revocation hearing to be conducted by a hearing examiner or an official designated by the Regional Commissioner at the institution in which the parolee is confined.

(3) Let the detainer stand and order further review at an appropriate time. If the warrant is not withdrawn and no revocation hearing is conducted while the prisoner is in state or local custody, an institutional revocation hearing shall be conducted after the prisoner's return to federal custody.

(d) Revocation hearings pursuant to this section shall be conducted in accordance with the provisions governing institutional revocation hearings, except that a hearing conducted at a state or local facility may be conducted by a hearing examiner, hearing examiner panel, or other official designated by the Regional Commissioner. Following a revocation hearing conducted pursuant to this section, the Commission may take any action specified in § 2.52.

(e)(1) A parole violator whose parole is revoked shall be given credit for all time in federal, state, or local confinement on a new offense for purposes of satisfaction of the reparole guidelines at § 2.20 and § 2.21.

(2) However, it shall be the policy of the Commission that the revoked parolee's original sentence (which due to the new conviction, stopped running upon his last release from federal confinement on parole) again start to run only upon release from the confinement portion of the new sentence or the date of reparole granted pursuant of these rules, whichever comes first. This subsection does not apply to cases where, by law, the running of the original sentence is not interrupted by a new conviction (e.g., YCA; NARA; Mexican or Canadian treaty cases).

(f) If a Regional Commissioner determines that additional information is required in order to make a decision pursuant to paragraph (a)(2) of this section, he may schedule a dispositional hearing at the state or local institution where the parolee is confined to obtain such information. Such hearing may be conducted by a hearing examiner, hearing examiner panel, or other official designated by the Regional Commissioner. The parolee shall have notice of such hearing, be allowed to testify in his behalf, and have opportunity for counsel as provided in § 2.48(b).

[52 FR 17400, May 8, 1987, as amended at 61 FR 33657, June 28, 1996]

§ 2.48 Revocation: Preliminary interview.

(a) *Interviewing officer*. A parolee who is retaken on a warrant issued by a Commissioner shall be given a preliminary interview by an official designated by the Regional Commissioner to enable the Commission to determine if there is probable cause to believe that the parolee has violated his parole as charged, and if so, whether a revocation hearing should be conducted. The official designated to conduct the preliminary interview may be a U.S. Probation Officer in the district where the prisoner is confined, provided he is not the officer who recommended that the warrant be issued.

(b) *Notice and opportunity to postpone interview*. At the beginning of the preliminary interview, the interviewing officer shall ascertain that the Warrant Application has been given to the parolee as required by § 2.46(b), and shall advise the parolee that he may have the preliminary interview postponed in order to obtain representation by an attorney or arrange for the attendance of witnesses. The parolee shall also be advised that if he cannot afford to retain an attorney he may apply to a U.S. District Court for appointment of counsel to represent him at the preliminary interview and the revocation hearing pursuant to 18 U.S.C. 3006A. In addition, the parolee may request the Commission to obtain the presence of persons who have given information upon which revocation may be based. Such adverse witnesses shall be requested to attend the preliminary interview unless the parolee admits a violation or has been convicted of a new offense while on supervision or unless the interviewing officer finds good cause for their non-attendance. Pursuant to § 2.51 a subpoena may issue for the appearance of adverse witnesses or the production of documents.

(c) *Review of the charges*. At the preliminary interview, the interviewing officer shall review the violation charges with the parolee, apprise the parolee of the evidence which has been presented to the Commission, receive the statements of witnesses and documentary evidence on behalf of the parolee, and allow cross-examination of those witnesses in attendance. Disclosure of the evidence presented to the Commission shall be made pursuant to § 2.50(d).

(d) At the conclusion of the preliminary interview, the interviewing officer

shall inform the parolee of his recommended decision as to whether there is probable cause to believe that the parolee has violated the conditions of his release, and shall submit to the Commission a digest of the interview together with his recommended decision.

(1) If the interviewing officer's recommended decision is that no probable cause may be found to believe that the parolee has violated the conditions of his release, the responsible Regional Commissioner shall review such recommended decision and notify the parolee of his final decision concerning probable cause as expeditiously as possible following receipt of the interviewing officer's digest. A decision to release the parolee shall be implemented without delay.

(2) If the interviewing officer's recommended decision is that probable cause may be found to believe that the parolee has violated a condition (or conditions) of his release, the responsible Regional Commissioner shall notify the parolee of his final decision concerning probable cause within 21 days of the date of the preliminary interview.

(3) Notice to the parolee of any final decision of a Regional Commissioner finding probable cause and ordering a revocation hearing shall state the charges upon which probable cause has been found and the evidence relied upon.

(e) *Release notwithstanding probable cause.* If the Commission finds probable cause to believe that the parolee has violated the conditions of his release, reinstatement to supervision or release pending further proceeding may nonetheless be ordered if it is determined that:

(1) Continuation of revocation proceedings is not warranted despite the violations found; or

(2) Incarceration pending further revocation proceedings is not warranted by the alleged frequency or seriousness of such violation or violations, and that the parolee is not likely to fail to appear for further proceedings, and that the parolee does not constitute a danger to himself or others.

(f) *Conviction as probable cause.* Conviction of a Federal, State, or local crime committed subsequent to release by a parolee shall constitute probable cause for the purposes of this section and no preliminary interview shall be conducted unless otherwise ordered by the Regional Commissioner.

(g) *Local revocation hearing.* A postponed preliminary interview may be conducted as a local revocation hearing by an examiner panel or other interviewing officer designated by the Regional Commissioner provided that the parolee has been advised that the postponed preliminary interview will constitute his final revocation hearing.

[42 FR 39809, Aug. 5, 1977, as amended at 44 FR 3408, 3409, Jan. 16, 1979; 46 FR 42842, Aug. 25, 1981; 47 FR 25735, June 15, 1982]

§ 2.49 Place of revocation hearing.

(a) If the parolee requests a local revocation hearing, he shall be given a revocation hearing reasonably near the place of the alleged violation(s) or arrest, if the following conditions are met:

(1) The parolee has not been convicted of a crime committed while under supervision; and

(2) The parolee denies that he has violated any condition of his release.

(b) The parolee shall also be given a local revocation hearing if he admits (or has been convicted of) one or more charged violations, but denies at least one unadjudicated charge that may be determinative of the Commission's decision regarding revocation and/or reparole, and requests the presence of one or more adverse witnesses regarding that contested charge. If the appearance of such witness at the hearing is precluded by the Commission for good cause, a local revocation hearing shall not be ordered.

(c) If there are two or more alleged violations, the hearing may be conducted near the place of the violation chiefly relied upon as a basis for the issuance of the warrant or summons as determined by the Regional Commissioner.

(d)(1) A parolee shall be given an institutional revocation hearing upon the parolee's return or recommitment to an institution if the parolee:

(i) Voluntarily waives the right to a local revocation hearing; or

(ii) Admits (or has been convicted of) one or more charged violations without contesting any unadjudicated charge that may be determinative of the Commission's decision regarding revocation and/or reparole.

(2) On his own motion, the Regional Commissioner may designate any case described in paragraph (d)(1) of this section for a local revocation hearing. The difference in procedures between a ''local revocation hearing'' and an ''institutional revocation hearing'' is set forth in §2.50(c).

(e) A parolee retaken on a warrant issued by the Commission shall be retained in custody until final action relative to revocation of his release, unless otherwise ordered by the Regional Commissioner under §2.48(e)(2). A parolee who has been given a revocation hearing pursuant to the issuance of a summons under §2.44 shall remain on supervision pending the decision of the Commission.

(f) A local revocation hearing shall be scheduled to be held within sixty days of the probable cause determination. Institutional revocation hearings shall be scheduled to be held within ninety days of the date of the execution of the violator warrant upon which the parolee was retaken. However, if a parolee requests and receives any postponement or consents to a postponed revocation proceeding, or if a parolee by his actions otherwise precludes the prompt conduct of such proceedings, the above-stated time limits may be extended. A local revocation hearing may be conducted by a hearing examiner, hearing examiner panel, or other official designated by the Regional Commissioner.

[42 FR 39809, Aug. 5, 1977, as amended at 44 FR 3408, 3409, Jan. 16, 1979; 68 FR 41530, July 14, 2003]

§2.50 Revocation hearing procedure.

(a) The purpose of the revocation hearing shall be to determine whether the parolee has violated the conditions of his release and, if so, whether his parole or mandatory release should be revoked or reinstated.

(b) The alleged violator may present witnesses, and documentary evidence in his behalf. However, the presiding hearing officer or examiner panel may limit or exclude any irrelevant or repetitious statement or documentary evidence.

(c) At a local revocation hearing, the Commission may on the request of the alleged violator or on its own motion, request the attendance of persons who have given statements upon which revocation may be based. Those witnesses who are present shall be made available for questioning and cross-examination in the presence of the alleged violator unless the presiding hearing officer or examiner panel finds good cause for their non-attendance. Adverse witnesses will not be requested to appear at institutional revocation hearings.

(d) All evidence upon which the finding of violation may be based shall be disclosed to the alleged violator at or before the revocation hearing. The hearing officer or examiner panel may disclose documentary evidence by permitting the alleged violator to examine the document during the hearing, or where appropriate, by reading or summarizing the document in the presence of the alleged violator.

(e) In lieu of an attorney, an alleged violator may be represented at a revocation hearing by a person of his choice. However, the role of such non-attorney representative shall be limited to offering a statement on the alleged violator's behalf with regard to reparole or reinstatement to supervision.

(f) A revocation decision may be appealed under the provisions of §2.26 or §2.27 as applicable.

[42 FR 39809, Aug. 5, 1977, as amended at 44 FR 3408, Jan. 16, 1979; 51 FR 32785, Sept. 16, 1986; 52 FR 33409, Sept. 3, 1987]

§2.51 Issuance of a subpoena for the appearance of witnesses or production of documents.

(a)(1) Preliminary interview or local revocation hearing: If any person who has given information upon which revocation may be based refuses, upon request by the Commission to appear, the Regional Commissioner may issue a subpoena for the appearance of such witness. Such subpoena may also be issued at the discretion of the Regional

Commissioner in the event such adverse witness is judged unlikely to appear as requested.

(2) In addition, the Regional Commissioner may, upon his own motion or upon a showing by the parolee that a witness whose testimony is necessary to the proper disposition of his case will not appear voluntarily at a local revocation hearing or provide an adequate written statement of his testimony, issue a subpoena for the appearance of such witness at the revocation hearing.

(3) Both such subpoenas may also be issued at the discretion of the Regional Commissioner if it is deemed necessary for orderly processing of the case.

(b) A subpoena issued pursuant to paragraph (a) of this section above may require the production of documents as well as, or in lieu of, a personal appearance. The subpoena shall specify the time and the place at which the person named therein is commanded to appear, and shall specify any documents required to be produced.

(c) A subpoena may be served by any Federal officer authorized to serve criminal process. The subpoena may be served at any place within the judicial district in which the place specified in the subpoena is located, or any place where the witness may be found. Service of a subpoena upon a person named therein shall be made by delivering a copy thereof to such person.

(d) If a person refuses to obey such subpoena, the Commission may petition a court of the United States for the judicial district in which the parole proceeding is being conducted, or in which such person may be found, to require such person to appear, testify, or produce evidence. The court may issue an order requiring such person to appear before the Commission, and failure to obey such an order is punishable by contempt.

§ 2.52 Revocation decisions.

(a) Whenever a parolee is summoned or retaken by the Commission, and the Commission finds by a preponderance of the evidence, that the parolee has violated a condition of the parole, the Commission may take any of the following actions:

(1) Restore the parolee to supervision including where appropriate:

(i) Reprimand;

(ii) Modification of the parolee's conditions of release;

(iii) Referral to a community corrections center for all or part of the remainder of his original sentence; or

(2) Revoke parole.

(b) If parole is revoked pursuant to this section, the Commission shall also determine, on the basis of the revocation hearing, whether reparole is warranted or whether the prisoner should be continued for further review.

(c) A parolee whose release is revoked by the Commission will receive credit on service of his sentence for time spent under supervision, except as provided below:

(1) If the Commission finds that such parolee intentionally refused or failed to respond to any reasonable request, order, summons or warrant of the Commission or any agent thereof, the Commission may order the forfeiture of the time during which the parolee so refused or failed to respond, and such time shall not be credited to service of the sentence.

(2) It is the Commission's interpretation of 18 U.S.C. 4210(b)(2) that, if a parolee has been convicted of a new offense committed subsequent to his release on parole, which is punishable by any term of imprisonment, detention, or incarceration in any penal facility, forfeiture of time from the date of such release to the date of execution of the warrant is an automatic statutory penalty, and such time shall not be credited to the service of the sentence. An actual term of confinement or imprisonment need not have been imposed for such conviction; it suffices that the statute under which the parolee was convicted permits the trial court to impose any term of confinement or imprisonment in any penal facility. If such conviction occurs subsequent to a revocation hearing the Commission may reopen the case and schedule a further hearing relative to time forfeiture and such further disposition as may be appropriate. However, in no event shall the violator term imposed under this subsection, taken together

with the time served before release, exceed the total length of the original sentence.

(d)(1) Notwithstanding the above, prisoners committed under the Narcotic Addict Rehabilitation Act or the Youth Corrections Act shall not be subject to any forfeiture provision, but shall serve uninterrupted sentences from the date of conviction, except as provided in § 2.10 (b) and (c).

(2) The commitment of a juvenile offender under the Federal Juvenile Delinquency Act may not be extended past the offender's twenty-first birthday unless the juvenile has attained his nineteenth birthday at the time of his commitment, in which case his commitment shall not exceed the lesser of two years or the maximum term which could have been imposed on an adult convicted of the same offense.

(e) In determining whether to revoke parole for non-compliance with a condition of fine, restitution, court costs or assessment, and/or court ordered child support or alimony payment, the Parole Commission shall consider the parolee's employment status, earning ability, financial resources, and any other special circumstances that may have a bearing on the matter. Revocation shall not be ordered unless the parolee is found to be deliberately evading or refusing compliance.

APPENDIX TO § 2.52—GENERAL STATEMENT OF POLICY

In the case of any revocation hearing conducted within the Ninth Circuit, the Commission will exercise discretion in determining whether or not to order forfeiture of all or part of the time spent on parole pursuant to 18 U.S.C. 4210(b)(2). The Commission's policy shall be to consider granting credit for time on parole in the case of a parole violator originally classified in the very good risk category (pursuant to 28 CFR 2.20) if the following conditions are met. The conviction must not be for a felony offense. The parole violation behavior (the offense of conviction plus any other violations) must be non-violent, and not involve a repeat of the parole violator's original offense behavior. Further, an adequate period of reimprisonment pursuant to the reparole guidelines at 28 CFR 2.21, and an adequate period of renewed supervision following release from reimprisonment or reinstatement to supervision, must be available without forfeiting street time. In the case of a parole violator originally classified in other than the ''very good risk'' category, it shall be the Commission's policy to order the forfeiture of all time spent on parole absent extraordinary circumstances. In no instance will the Commission grant credit in the case of a repeat violator on the current sentence.

[42 FR 39809, Aug. 5, 1977, as amended at 44 FR 3408, 3410, Jan. 16, 1979; 50 FR 36422, Sept. 6, 1985; 53 FR 47187, Nov. 22, 1988; 55 FR 42185, Oct. 18, 1990; 68 FR 41530, July 14, 2003]

§ 2.53 Mandatory parole.

(a) A prisoner (including a prisoner sentenced under the Narcotic Addict Rehabilitation Act, Federal Juvenile Delinquency Act, or the provisions of 5010(c) of the Youth Corrections Act) serving a term or terms of 5 years or longer shall be released on parole after completion of two-thirds of each consecutive term or terms or after completion of 30 years of each term or terms of more than 45 years (including life terms), whichever comes earlier, unless pursuant to a hearing under this section, the Commission determines that there is a reasonable probability that the prisoner will commit any Federal, State, or local crime or that the prisoner has frequently or seriously violated the rules of the institution in which he is confined. If parole is denied pursuant to this section, such prisoner shall serve until the expiration of his sentence less good time.

(b) When feasible, at least 60 days prior to the scheduled two-thirds date, a review of the record shall be conducted by an examiner panel. If a mandatory parole is ordered following this review, no hearing shall be conducted.

(c) A prisoner released on mandatory parole pursuant to this section shall remain under supervision until the expiration of the full term of his sentence unless the Commission terminates parole supervision pursuant to § 2.43 prior to the full term date of the sentence.

(d) A prisoner whose parole has been revoked and whose parole violator term is 5 years or more shall be eligible for mandatory parole under the provisions of this section upon completion of two-thirds of the violator term and shall be considered for mandatory parole under the same terms as any other eligible prisoner.

[43 FR 38822, Aug. 31, 1978]

§ 2.54 Reviews pursuant to 18 U.S.C. 4215(c).

The Attorney General, within thirty days after entry of a Regional Commissioner's decision, may request in writing that the National Appeals Board review such decision. Within sixty days of the receipt of the request the National Appeals Board shall, upon the concurrence of two members, affirm, modify, or reverse the decision, or order a rehearing at the institutional or regional level. The Attorney General and the prisoner affected shall be informed in writing of the decision, and the reasons therefor.

[42 FR 39821, Aug. 5, 1977, as amended at 43 FR 17470, Apr. 25, 1978; 44 FR 3408, Jan. 16, 1979]

§ 2.55 Disclosure of file prior to parole hearing.

(a) *Processing disclosure requests.* At least 60 days prior to a hearing scheduled pursuant to 28 CFR 2.12 or 2.14 each prisoner shall be given notice of his right to request disclosure of the reports and other documents to be used by the Commission in making its determination.

(1) The Commission's file consists mainly of documents provided by the Bureau of Prisons. Therefore, disclosure of documents used by the Commission can normally be accomplished by disclosure of documents in a prisoner's institutional file. Requests for disclosure of a prisoner's institutional file will be handled under the Bureau of Prison's disclosure regulations. The Bureau of Prisons has 15 days from date of receipt of a disclosure request to respond to that request.

(2) A prisoner may also request disclosure of documents used by the Commission which are contained in the Commission's regional office file but not in the prisoner's institutional file.

(3) Upon the prisoner's request, a representative shall be given access to the presentence investigation report reasonably in advance of the initial hearing, interim hearing, and a 15-year reconsideration hearing, pursuant and subject to the regulations of the U.S. Bureau of Prisons. Disclosure shall not be permitted with respect to confidential material withheld by the sentencing court under Rule 32(c)(3)(A), F.R.Crim.P.

(b) *Scope of disclosure.* The scope of disclosure under this section is limited to reports and other documents to be used by the Commission in making its determination. At statutory interim hearings conducted pursuant to 28 CFR 2.14 the Commission only considers information concerning significant developments or changes in the prisoner's status since the initial hearing or a prior interim hearing. Therefore, prehearing disclosure for interim hearings will be limited to such information.

(c) *Exemption to disclosure (18 U.S.C. 4208(c)).* A document may be withheld from disclosure to the extent it contains:

(1) Diagnostic opinions which, if known to the prisoner, could lead to a serious disruption of his institutional program;

(2) Material which would reveal a source of information obtained upon a promise of confidentiality; or

(3) Any other information which, if disclosed, might result in harm, physical or otherwise to any person.

(d) *Summarizing nondisclosable documents.* If any document or portion of a document is found by the Commission, the Bureau of Prisons or the originating agency to fall within an exemption to disclosure, the agency shall:

(1) Identify the material to be withheld; and

(2) State the exemption to disclosure under paragraph (c) of this section; and

(3) Provide the prisoner with a summary of the basic content of the material withheld with as much specificity as possible without revealing the nondisclosable information.

(e) *Waiver of disclosure.* When a timely request has been made for disclosure, if any document or summary of a document relevant to the parole determination has not been disclosed 30 days prior to the hearing, the prisoner shall be offered the opportunity to waive disclosure of such document without prejudice to his right to later review the document or a summary of the document. The examiner panel may disclose the document and proceed with the hearing so long as the prisoner waives his right to advance disclosure. If the

prisoner chooses not to waive prehearing disclosure, the examiner panel shall continue the hearing to the next docket to permit disclosure. A continuance for disclosure should not be extended beyond the next hearing docket.

(f) *Late received documents.* If a document containing new and significant adverse information is received after a parole hearing but before all review and appellate procedures have been concluded, the prisoner shall be given a rehearing on the next docket. A copy of the document shall be forwarded to the institution for inclusion in the prisoner's institutional file. The Commission shall notify the prisoner of the new hearing and his right to request disclosure of the document pursuant to this section. If a late received document provides favorable information, merely restates already available information or provides insignificant information, the case will not be reopened for disclosure.

(g) *Reopened cases.* Whenever a case is reopened for a new hearing and there is a document the Commission intends to use in making its determination, a copy of the document shall be forwarded for inclusion in the prisoner's institutional file and the prisoner shall be informed of his right to request disclosure of the document pursuant to this section.

[50 FR 40374, Oct. 3, 1985]

§ 2.56 Disclosure of Parole Commission file.

(a) *Procedure.* Copies of disclosable records pertaining to a prisoner or a parolee which are contained in the subject's Parole Commission file may be obtained by that prisoner or parolee upon written request pursuant to this section. Such requests shall be answered as soon as possible in the order of their receipt. Other persons may obtain copies of such documents only upon proof of authorization from the prisoner or parolee concerned or to the extent permissible under the Freedom of Information Act or the Privacy Act of 1974.

(b) *Scope of disclosure.* Disclosure under this section shall extend to Commission documents concerning the prisoner or parolee making the request. Documents which are contained in the regional file and which are prepared by agencies other than the Commission which are also subject to the provisions of the Freedom of Information Act, shall be referred to the appropriate agency for a response pursuant to its regulations, unless the document has previously been prepared for disclosure pursuant to § 2.55, or is fully disclosable on its face, or has been prepared by the Bureau of Prisons. Any Bureau of Prisons documents in a parole file are duplicates of records in the inmate's institutional file. Before referring these documents to the Bureau of Prisons (BOP), the Commission will ask the requestor whether he also wants the BOP documents in his parole file processed.

(1) Requests that are only for a copy of the tape recording of a hearing will be processed ahead of requests seeking multiple documents from the Parole Commission file (priority processing). A requester may limit the scope of the request to a tape recording only (or to a tape recording and/or up to two documents) and thereby qualify for priority processing. For example, a request for the tape recording and the examiner's summary of a hearing qualifies for priority processing.

(2) [Reserved]

(c) *Exemptions to disclosure.* A document or segregable portion thereof may be withheld from disclosure to the extent it contains material exempt from disclosure under the Freedom of Information Act. 5 U.S.C. 552(b)(1)–(9).

(d) *Specification of documents withheld.* Documents that are withheld pursuant to paragraph (c) of this section shall be identified for the requester together with the applicable exemption for withholding each document or portion thereof. In addition, the requester must be informed of the right to appeal any non-disclosure to the Office of the Chairman.

(e) *Hearing record.* Upon request by the prisoner or parolee concerned, the Commission shall make available a copy of any verbatim record (e.g., tape recording) which it has retained of a hearing, pursuant to 18 U.S.C. 4208(f).

(f) *Costs.* In any case in which billable costs exceed $14.00 (based upon the provisions and fee schedules as set forth in the Department of Justice regulation

28 CFR 16.10), requesters will be notified that they will be required to reimburse the United States for such costs before copies are released.

(g) *Relation to other provisions.* Disclosure under this section is authorized by 28 CFR 16.85 under which the Parole Commission is exempt from the record disclosure provisions of the Privacy Act of 1974, as well as certain other provisions of the Act pursuant to 5 U.S.C. 552a(j)(2). Requests submitted under the Freedom of Information Act or the Privacy Act for the requester's own records will be processed under this section. In no event will the Commission consider satisfaction of a request under this section, the Freedom of Information Act, or the Privacy Act of 1974, to be a prerequisite to an adequate parole hearing under 18 U.S.C. 4208 (for which disclosure is exclusively governed by § 2.55 of this part) or to the exercise of a parole applicant's appeal rights under 18 U.S.C. 4215. Provisions of the Freedom of Information Act not specifically addressed by these regulations (including the reading room) are covered by 28 CFR, part 16, subpart A.

(h) *Appeals*—(1) *Appeals to the Chairman.* When a request for access to Parole Commission records or a waiver of fees has been denied in whole or in part, or when the Commission fails to respond to a request within the time limits set forth in the FOIA, the requester may appeal the denial of the request to the Chairman of the Commission within thirty days from the date of the notice denying the request. An appeal to the Chairman shall be made in writing and addressed to the Office of the Chairman, U.S. Parole Commission, 5550 Friendship Boulevard, Suite 420, Chevy Chase, Maryland 20815.

(2) *Decision on appeal.* A decision affirming in whole or in part the denial of a request shall include a brief statement of the reason or reasons for the affirmance, including each FOIA exemption relied upon and its relation to each record withheld, and a statement that judicial review of the denial is available in the U.S. district court for the judicial district in which the requester resides or has his principal place of business, the judicial district in which the requested records are located, or in the District of Columbia. If the denial of a request is reversed on appeal to the Chairman, the requester shall be so notified and the request shall be processed promptly by Commission staff in accordance with the Chairman's decision on appeal.

(i) Expedited processing of Requests. (1) The Commission will provide expedited processing of a request when a requester has demonstrated a compelling need as defined in this section and has presented a statement certified by such person to be true and correct to the best of such person's knowledge and belief. A requester may demonstrate ''compelling need'' by establishing one of the following:

(i) That failure to obtain the requested records on an expedited basis could reasonably be expected to pose an imminent threat to the life or physical safety of an individual; or

(ii) With respect to a request made by a person primarily engaged in disseminating information, urgency to inform the public concerning actual or alleged federal government activity.

(2) A determination as to whether to provide expedited processing shall be made within ten days after the date of the request. However, the fact of lawful imprisonment in a correctional facility or revocation of parole shall not be deemed to pose an imminent threat to the life or physical safety of an individual. The Commission shall process as soon as practicable any request for records to which it has granted expedited processing. An administrative appeal of a denial of expedited processing may be made to the Chairman of the Commission within thirty days from the date of notice denying expedited processing.

[50 FR 40375, Oct. 3, 1985, as amended at 52 FR 47921, Dec. 17, 1987; 53 FR 24933, July 1, 1988; 53 FR 47187, Nov. 22, 1988; 54 FR 27839, June 30, 1989; 58 FR 51780, Oct. 5, 1993; 62 FR 51602, Oct. 2, 1997]

§ 2.57 Special parole terms.

(a) The Drug Abuse Prevention and Control Act, 21 U.S.C. sections 801 to 966, provides that, on conviction of certain offenses, mandatory ''special parole terms'' must be imposed by the court as part of the sentence. This

term is an additional period of supervision which commences upon completion of any period on parole or mandatory release supervision from the regular sentence; or if the prisoner is released without supervision, commences upon such release.

(b) At the time of release under the regular sentence, whether under full term expiration or under a mandatory release certificate or a parole certificate, a separate Special Parole Term certificate will be issued to the prisoner by the Bureau of Prisons.

(c) Should a parolee be found to have violated conditions of release during supervision under his regular sentence, i.e., before commencement of the Special Parole Term, he may be returned as a violator under his regular sentence; the Special Parole Term will follow unaffected, as in paragraph (a) of this section. Should a parolee violate conditions of release during the Special Parole Term he will be subject to revocation on the Special Parole Term as provided in § 2.52, and subject to reparole or mandatory release under the Special Parole Term. Notwithstanding the provisions of § 2.52(c), a special parole term violator whose parole is revoked shall receive no credit for time spent on parole pursuant to 21 U.S.C. 841(c).

(d) If a prisoner is reparoled under the revoked Special Parole Term a certificate of parole to Special Parole Term is issued by the Commission. If the prisoner is mandatorily released under the revoked ''special parole term'' a certificate of mandatory release to Special Parole Term will be issued by the Bureau of Prisons.

(e) If regular parole or mandatory release supervision is terminated under § 2.43, the Special Parole Term commences to run at that point in time. Early termination from supervision from a Special Parole Term may occur as in the case of a regular parole term, except that the time periods considered shall commence from the beginning of the Special Parole Term.

[42 FR 39809, Aug. 5, 1977, as amended at 44 FR 3410, Jan. 16, 1979. Redesignated at 44 FR 26551, May 4, 1979, as amended at 54 FR 11689, Mar. 21, 1989]

§ 2.58 Prior orders.

Any order of the United States Board of Parole entered prior to May 14, 1976, including, but not limited to, orders granting, denying, rescinding or revoking parole or mandatory release, shall be a valid order of the United States Parole Commission according to the terms stated in the order.

[42 FR 39809, Aug. 5, 1977. Redesignated at 44 FR 26551, May 4, 1979]

§ 2.59 Designation of a Commissioner to act as a hearing examiner.

The Chairman may designate a Commissioner, with the Commissioner's consent, to serve as a hearing examiner on specified hearing dockets. The Commissioner who serves as a hearing examiner may not vote in the same proceeding as a Commissioner.

[60 FR 40094, Aug. 7, 1995]

§ 2.60 Superior program achievement.

(a) Prisoners who demonstrate superior program achievement (in addition to a good conduct record) may be considered for a limited advancement of the presumptive date previously set according to the schedule below. Such reduction will normally be considered at an interim hearing or pre-release review. It is to be stressed that a clear conduct record is expected; this reduction applies only to cases with documented sustained superior program achievement over a period of 9 months or more in custody.

(b) Superior program achievement may be demonstrated in areas such as educational, vocational, industry, or counseling programs, and is to be considered in light of the specifics of each case. A report from the Bureau of Prisons based upon successful completion of a residential substance abuse program of at least 500 hours will be given prompt review by the Commission for a possible advancement under this section.

(c) Upon a finding of superior program achievement, a previously set presumptive date may be advanced. The normal maximum advancement permissible for superior program achievement during the prisoner's entire term shall be as set forth in the following schedule. It is the intent of

the Commission that this maximum be exceeded only in the most clearly exceptional cases.

(d) Partial advancements may be given (for example, a case with superior program achievement during only part of the term or a case with both superior program achievement and minor disciplinary infraction(s)). Advancements may be given at different times; however, the limits set forth in the following schedule shall apply to the total combined advancement.

(e) Schedule of Permissible Reductions for Superior Program Achievement.

Total months required by original presumptive date	Permissible reduction
14 months or less	Not applicable.
15 to 22 months	Up to 1 month.
23 to 30 months	Up to 2 months.
31 to 36 months	Up to 3 months.
37 to 42 months	Up to 4 months.
43 to 48 months	Up to 5 months.
49 to 54 months	Up to 6 months.
55 to 60 months	Up to 7 months.
61 to 66 months	Up to 8 months.
67 to 72 months	Up to 9 months.
73 to 78 months	Up to 10 months.
79 to 84 months	Up to 11 months.
85 to 90 months	Up to 12 months.
91 plus months	Up to 13 months.[1]

[1] Plus up to 1 additional month for each 6 months or fraction thereof, by which the original date exceeds 96 months.

(f) For cases originally continued to expiration, the statutory good time date (calculated under 18 U.S.C. 4161) will be used for computing the maximum reduction permissible and as the base from which the reduction is to be subtracted for prisoners serving sentences of less than five years. For prisoners serving sentences of five or more, the two-thirds date (calculated pursuant to 18 U.S.C. 4206(d)) will be used for these purposes. If the prisoner's presumptive release date has been further reduced by extra good time (18 U.S.C. 4162) and such reduction equals or exceeds the reduction applicable for superior program achievement, the Commission will not give an additional reduction for superior program achievement.

[44 FR 55004, Sept. 24, 1979; 44 FR 59527, Oct. 16, 1979, as amended at 49 FR 26580, June 28, 1984; 61 FR 4351, Feb. 6, 1996]

§ 2.61 Qualifications of representatives.

(a) A prisoner or parolee may select any person to appear as his or her representative in any proceeding, and any representative will be deemed qualified unless specifically disqualified under paragraph (b) or (c) of this section. However, an examiner or examiner panel may bar an otherwise qualified representative from participating in a particular hearing, provided good cause for such action is found and stated in the record (e.g., willfully disruptive conduct during the hearing by repeated interruption or use of abusive language). In certain situations, good cause may be found in advance of the hearing (e.g., that the proposed representative is a prisoner in disciplinary segregation whose presence at the hearing would pose a risk to security, or has a personal interest in the case which appears to conflict with that of the parole applicant).

(b) The Commission may disqualify any representative from appearing before it for up to a five-year period if, following a hearing, the Commission finds that the representative has engaged in any conduct which demonstrates a clear lack of personal integrity or fitness to practice before the Commission (including, but not limited to, deliberate or repetitive provision of false information to the Commission, or solicitation of clients on the strength of purported personal influence with U.S. Parole Commissioners or staff).

(c)(1) In addition to the prohibitions contained in 18 U.S.C. 207, no former employee of any Federal criminal justice agency (in either the Executive or Judicial Branch of the Government) with the exception of the Federal Defender Service, shall be qualified to act as a representative for hire in any case before the Commission for one year following termination of Federal employment. However, such persons may be employed by, or perform consulting services for, a private firm or other organization providing representation before the agency, to the extent that such employment or service does not include the performance of any representational act before the Commission.

(2) No prisoner or parolee may serve as a representative before the Commission, at the hire of individual clients, in any case.

[48 FR 14377, Apr. 4, 1983, as amended at 48 FR 44528, Sept. 29, 1983]

§ 2.62 Rewarding assistance in the prosecution of other offenders; criteria and guidelines.

(a) The Commission may consider as a factor in the parole release decision-making a prisoner's assistance to law enforcement authorities in the prosecution of other offenders.

(1) The assistance must have been an important factor in the investigation and/or prosecution of an offender other than the prisoner. Other significant assistance (e.g., providing information critical to prison security) may also be considered.

(2) The assistance must be reported to the Commission in sufficient detail to permit a full evaluation. However, no promises, express or implied, as to a Parole Commission reward shall be given any weight in evaluating a recommendation for leniency.

(3) The release of the prisoner must not threaten the public safety.

(4) The assistance must not have been adequately rewarded by other official action.

(b) If the assistance meets the above criteria, the Commission may consider providing a reduction of up to one year from the presumptive parole date that the Commission would have deemed warranted had such assistance not occurred. If the prisoner would have been continued to the expiration of sentence, any reduction will be taken from the actual date of the expiration of the sentence. Reductions exceeding the one year limit specified above may be considered only in exceptional circumstances.

(c) In the case of an eligible DC Code prisoner whose assistance meets the criteria of this section, the Commission may consider deducting a point under Category V of the Point Assignment Table at § 2.80, in addition to any other deduction for positive program achievement, when considering such prisoner for parole. In the case of a DC Code prisoner with an unserved minimum term, the Commission may consider filing an application under § 2.76 for a reduction of up to one-third of such term less applicable good time.

[52 FR 44389, Nov. 19, 1987. Redesignated at 63 FR 39176, July 21, 1998, as amended at 64 FR 5613, Feb. 4, 1999]

§ 2.63 Quorum.

Any Commission action authorized by law may be taken on a majority vote of the Commissioners holding office at the time the action is taken.

[61 FR 55743, Oct. 29, 1996. Redesignated at 63 FR 39176, July 21, 1998]

§ 2.64 Youth Corrections Act.

(a) The provisions of this section only apply to offenders serving sentences imposed under former 18 U.S.C. section 5010 (b) and (c).

(b) *Approval of program plans.* (1) The criteria outlined in paragraph (d) of this section (on determining successful response to treatment) shall be considered in determining whether a proposed program plan will effectively reduce the risk to the public welfare presented by the YCA prisoner's release.

(2) If the prisoner's program plan has not already been approved by the Commission, the examiner panel shall be given the plan at a hearing for review and approval. The examiners shall indicate their approval or disapproval of the program plan (with relevant comments and recommendations) in the hearing summary.

(3) If the examiners consider the plan inadequate, they will discuss their concerns with institutional staff. If there is still a disagreement on the plan, the case will be referred to the Bureau's regional correctional programs administrator with the recommended changes. Unresolved disputes concerning the adequacy of the program plan shall be decided by the Regional Commissioner and the Regional Director of the Bureau of Prisons. The Regional Commissioner shall render the final decision on approving or disapproving each program plan on behalf of the Commission. Once the program plan has been approved, subsequent approvals are not necessary, unless significant modifications are made by institutional staff.

(c) *Parole hearings and progress reports.* (1) Initial hearings shall be conducted in accordance with §§ 2.12 and 2.13. The examiner panel will discuss with the prisoner and a staff member who is knowledgeable about the case the program plan and the importance of good conduct and program participation is setting the release date.

(2) An interim hearing must be scheduled for an inmate every nine months if the inmate is serving a sentence of less than seven years. If the inmate is serving a sentence of seven years or more, the interim hearing must be scheduled every twelve months. If the inmate has been continued to the expiration of his sentence, and he has less than twelve months remaining to be served prior to his release or his transfer to a community corrections center, no further hearing is required. In addition, within 60 days of receipt of any special progress report from the warden recommending parole, the prisoner shall be scheduled for a special interim hearing, unless the recommendation can be timely considered at a regularly scheduled interim hearing. An institutional staff member who has personal knowledge of the case shall be present to assist the examiners in their evaluation of the prisoner's conduct, program performance, and response to treatment.

(3) After any interim hearing or review on the record, the Commission may advance the presumptive release date, let the date stand, or retard/rescind the date if the prisoner has committed disciplinary infractions or new criminal conduct.

(4) An interim hearing will not be scheduled after receipt of a progress report, if the Commission decides on the record to parole the prisoner as soon as a release plan is approved (normally within 60 days of the decision).

(5) The institution shall send a progress report to the Commission:

(i) No more than 60 days before each interim hearing;

(ii) Upon determining that a prisoner should be recommended for parole; and

(iii) Before presumptive parole date to allow for the pre-release record review under § 2.14(b).

The warden may forward progress reports to the Commission at other times in his discretion. Progress reports shall also be sent to the Commission every six months for prisoners who have waived interim hearings to enable the Commission to verify that these prisoners have satisfied the conditions of securing their release on an alternative parole date granted under the former YCA compliance plan (*i.e.*, completion of the program plan) or the normal presumptive release date (*i.e.*, obedience to institutional rules).

(6) For prisoners granted earlier parole dates under former compliance plans in *Watts* v. *Bleaski:* A prisoner may waive interim hearings under this section, in which case he would retain an alternative parole date previously granted to him or a presumptive parole date granted as a result of a finding that the prisoner had responded to treatment. A prisoner who waives an interim hearing under this section may, at any time, re-apply for the hearing and be considered under this section in accordance with the application/waiver provisions at § 2.11. The Commission will not review the program plans for prisoners who waive interim hearings pursuant to this paragraph, unless the prisoner subsequently is scheduled for a hearing to consider new criminal conduct or a rule infraction *and* a modification of the original program plan appears warranted due to the prisoner's new criminal offense or infraction. If the prisoner is scheduled for a hearing that may not be waived (*e.g.*, an interim hearing where there has been a finding of a disciplinary infraction since the last hearing, or any hearing scheduled pursuant to § 2.28 (b) through (f), this section will be applied at such hearing.

(7) *Warden's recommendation.* Based on the completion of the program by the prisoner, and the quality of effort demonstrated by the prisoner in completing the plan, the warden will recommend to the Commission a conditional release date for its consideration. This recommendation shall be accompanied by a report on the prisoner's participation and level of achievement in different aspects of his program.

(d) *Criteria for finding successful response to treatment programs.* (1) In determining whether a prisoner has successfully ''responded to treatment'' the Commission shall examine whether the prisoner has shown that he has received sufficient corrective training, counseling, education, and therapy that the public would not be endangered by his release. See former 18 U.S.C. 5006(f) (definition of ''treatment'' under the YCA). The Bureau of Prisons shall assist the Commission in this determination by informing the Commission when the prisoner has completed his program plan and by advising the Commission of the quality of effort demonstrated by the prisoner in completing the plan.

(2) In determining the extent of a prisoner's positive response to treatment, the Commission shall examine the degree by which the prisoner has increased the likelihood that his release would not jeopardize public welfare through his program performance and conduct record. See 18 U.S.C. 4206(a)(2). The starting report for the analysis of a prisoner's response to treatment will be the original parole prognosis reached by the use of the salient factor score, and an evaluation of the nature of the prisoner's prior criminal history and other characteristics of the prisoner. The nature of the current offense may also be considered in determining the risk to the public welfare presented by the prisoner's release. The Commission will then proceed to evaluate whether the prisoner's program participation and institutional conduct has improved the original risk prognosis and evidences an alteration of his valued system, including an understanding of the wrongfulness of his past criminal conduct. For those prisoners who have exhibited serious or violent criminal behavior, the Commission will exercise more caution in making a finding that the prisoner has responded to treatment to the degree that he should be released.

(3) With regard to program performance, significant weight will be given to the following factors in determining a prisoner's response to treatment. This is not intended as an exhaustive list.

(i) *Vocational training:* Where the inmate originally had few job skills, the acquisition of a marketable job skill through vocational training or an apprenticeship program.

(ii) *Education:* Participation in educational programs to acquire an educational level at least the level of a high school graduate.

(iii) *Psychological counseling and therapy:* Where the prisoner's behavior has shown that he may be affected by personality disorders or a mental illness that has hampered his ability to lead a law-abiding life, or that he may otherwise benefit from such programs, participation in psychological and/or other specialized programs which lead to a judgment by the therapist/counselor that the prisoner has significantly improved his ability to obey the law and favorably modified his value system. Participation in these programs will normally be required for a significant advancement of the presumptive release date for a prisoner who has either committed or attempted a crime of violence.

(iv) *Drug/alcohol abuse programs:* Where the prisoner has a history of drug/alcohol abuse, participation in a drug/alcohol abuse program which leads to the judgment by the therapist/counselor that there is a significant likelihood that the prisoner will not revert to drug/alcohol abuse and has thereby significantly improved his ability to obey the law.

(v) *Work:* Assuming the prisoner is physically and mentally able to do so and is not otherwise engaged in an institutional activity which prevents him from obtaining a job, participation in a job on a regular basis so as to demonstrate a stable life pattern and a favorable modification of his value system.

(4) Prison misconduct (*i.e.*, disobedience to institutional rules, escape) and new criminal conduct in the institution shall be considered in the decision as to whether (or to what degree) a prisoner has successfully responded to treatment. The rescission guidelines of 2.36 shall be used in retarding or rescinding the original presumptive release date set according to the guidelines and the factors described in 18 U.S.C. 4206. If the original presumptive

date has been advanced based on response to treatment, the rescission guidelines may also be used to retard or rescind the new date to maintain institutional discipline, if the misconduct is not deemed serious enough to affect the decision that the prisoner has responded to treatment. But misconduct subsequent to the advancement of a release date based on a finding of response to treatment may also result in a reversal of that finding and the cancellation of any advancement of the original presumptive release date.

(e) *Setting the parole date (balancing section 4206 factors with response to treatment).* At any hearing or review on the record, the presumptive release date may be advanced if it is determined that the prisoner has responded to a sufficient degree to his treatment programs. The amount of the advancement should be proportional to the degree of response evidenced by the prisoner. In making the advancement, no rule restricting the amount of the reduction—whether based on the guidelines (§ 2.20) or the rule on superior program achievement (§ 2.60)—shall be used. The decision will be the result of a case-by-case evaluation in which response to treatment programs, the seriousness of the offense, and the original parole prognosis are all weighed by the Commission with no one factor capable of excluding all others.

(f) *Parole violators.* Parole violators returned to an institution following a local revocation hearing shall normally be considered for reparole under this section at a hearing within six months of their arrival at the institution.

(g) *Early termination from supervision.* (1) A review of the YCA parolee's file will be conducted at the conclusion of each year of supervision (following receipt of the annual progress report—Form F–3) and six months prior to the expiration of his sentence (after receipt of the final report).

(2) A YCA parolee shall not be continued on supervision beyond the time periods specified in the early termination guidelines (§ 2.43), unless case-specific factors indicate further supervision is warranted. The guidelines at § 2.43 shall not be routinely used to *deny* early discharge to a YCA parolee who has yet to complete two (or three) years of clean supervision.

(3) The Commission shall consider the facts and circumstances of each YCA parolee's case, focusing on the risk he poses to the public and the benefit he may obtain from further supervision. The nature of the offense and parolee's past criminal record shall be taken into account only to evaluate the risk that the parolee may still pose to the public.

(4) In denying early discharge, the Commission shall inform the probation office by letter (with a copy to the YCA parolee) of the reasons for continued supervision. The reasons should pertain, whenever possible, to the facts and circumstances of the YCA parolee's case. If there are no case-specific factors which indicate that discharge should be either granted to denied and further supervision appears warranted, the Commission may inform the YCA parolee that he is continued on supervision because of its experience with similarly situated offenders.

[53 FR 49654, Dec. 9, 1988, as amended at 55 FR 289, Jan. 4, 1990. Redesignated at 63 FR 39176, July 21, 1998, and amended at 68 FR 41530, July 14, 2003]

§ 2.65 Paroling policy for prisoners serving aggregate U.S. and D.C. Code sentences.

(a) *Applicability.* This regulation applies to all prisoners serving any combination of U.S. and D.C. Code sentences that have been aggregated by the U.S. Bureau of Prisons. Such individuals are considered for parole on the basis of a single parole eligibility and mandatory release date on the aggregate sentence. Pursuant to § 2.5, every decision made by the Commission, including the grant, denial, and revocation of parole, is made on the basis of the aggregate sentence.

(b) *Basic policy.* The Commission shall apply the guidelines at § 2.20 to the prisoner's U.S. Code crimes, and the guidelines of the District of Columbia Board of Parole to the prisoner's D.C. Code crimes.

(c) *Determining the federal guideline range.* The Commission shall first consider the U.S. Code offenses pursuant to the guidelines at § 2.20, and shall determine the appropriate number of

months to be served (the prisoner's ''federal time''). The Commission shall deem the ''federal time'' to have commenced with the prisoner's initial commitment on the current aggregate sentence, including jail time.

(d) *Decisions above the federal guideline range.* The ''federal time'' thus determined may be a decision within, below or above the federal guidelines, but it shall not exceed the limit of the U.S. Code sentence, *i.e.*, the number of months that would be required by the statutory release date if the U.S. Code sentence is less than five years, or the two-thirds date if the U.S. Code sentence is five years or more. The D.C. Code criminal behavior may not be used as an aggravating offense factor, but may be used as predictive basis for exceeding the federal guideline range to account for the actual degree and/or seriousness of risk.

(e) *Scheduling the D.C. parole hearing.* The Commission shall then schedule a D.C. parole hearing to be conducted not later than four months prior to the parole eligibility date, or the expiration of the ''federal time,'' whichever is later. At the D.C. parole hearing the Commission shall apply the point score system of the D.C. Board of Parole, pursuant to the regulations of the D.C. Board of Parole, to determine the prisoner's suitability for release on parole.

(f) *Granting parole.* In determining whether or not to grant parole pursuant to the point score system of the D.C. Board of Parole, and the length of any continuance for a rehearing if parole is denied, the Commission shall presume that the eligible prisoner has satisfied basic accountability for the D.C. Code offense behavior. However, the Commission retains the authority to consider any unusual offense circumstances pursuant to 28 DCMR 204.22 to deny parole despite a favorable point score, and to set a rehearing date beyond the ordinary schedule. The Commission shall also consider whether the totality of the prisoner's offense behaviors (U.S. and D.C. Code) warrants a continuance to reflect the true seriousness or the degree of the risk that the release of the prisoner would pose for the public welfare. Nonetheless, the Commission shall not deny parole or order a continuance, solely on the ground of punishment for the U.S. Code offenses standing alone, or on grounds that have been adequately accounted for in a decision to exceed the federal guideline range.

(g) *Hearings.* The Commission shall, in accordance with § 2.12 of these regulations, conduct an initial hearing to determine the federal time. This portion of the decision shall be subject to appeal pursuant to § 2.26 of these regulations. A D.C. parole hearing to determine the prisoner's suitability for parole under the D.C. guidelines shall be conducted as ordered at the initial hearing. Prior to the D.C. parole hearing, statutory interim hearings shall be conducted pursuant to § 2.14 of these regulations, including an interim hearing at eligibility on the aggregate sentence if no other interim hearing would be held. After the D.C. parole hearing, rehearings shall be conducted pursuant to the rules and policy guidelines of the D.C. Board of Parole, if release on parole is not granted.

(h) *Revocation decisions.* Violations of parole are violations on the aggregate sentence, and a parole violation warrant is therefore issued under the authority of the aggregate sentence. With regard to the reparole decision, the Commission shall follow the guidelines at § 2.21 of these rules, but rehearings shall be scheduled according to the guidelines of the D.C. Board of Parole.

(i) *Forfeiture of street time.* All time on parole shall be forfeited if required under § 2.52(c) of these regulations. If not, the Commission shall divide the total time on parole (street time) according to the proportional relationship of the D.C. sentence to the U.S. sentence, and shall order the forfeiture of the portion corresponding to the D.C. sentence pursuant to D.C. Code 24–406(a). For example, if the prisoner is serving a two-year D.C. Code sentence and a three-year U.S. Code sentence, the D.C. sentence is two-fifths, or 40 percent, of the total aggregate sentence. If he was on parole 100 days, he therefore forfeits 40 days. ''Street time'' is measured from the date of release on parole to the execution of the

warrant or confinement on other charges.

[54 FR 27842, June 30, 1989, as amended at 57 FR 41395, 41396, Sept. 10, 1992. Redesignated at 63 FR 39176, July 21, 1998, and amended at 68 FR 41530, July 14, 2003]

§ 2.66 Expedited Revocation Procedure.

(a) In addition to the actions available to the Commission under § 2.47(a) and (b), and under § 2.48, the Commission may offer an alleged parole violator an opportunity to accept responsibility for his violation behavior, to waive a revocation hearing, and to accept the sanction proposed by the Commission in the Notice of Eligibility for Expedited Revocation Procedure that is sent to the alleged parole violator.

(b) The following cases may be considered under the expedited revocation procedure:

(1) Cases in which the alleged parole violator has been given a preliminary interview under § 2.48, and the alleged violation behavior would be graded Category One or Category Two;

(2) Cases in which the alleged violator has been given a preliminary interview under § 2.48 and the proposed decision is continue to expiration of sentence, regardless of offense category; and

(3) Cases in which an alleged violator has received a dispositional review under § 2.47, and the Commission determines that conditional withdrawal of the warrant would be appropriate, but forfeiture of street time is deemed necessary to provide an adequate period of supervision.

(c) The alleged violator's consent shall not be deemed to create an enforceable agreement with respect to any action the Commission is authorized to take by law or regulation, or to limit in any respect the normal statutory consequences of a revocation of parole or mandatory release.

[63 FR 25770, May 11, 1998. Redesignated at 63 FR 39176, July 21, 1998]

Subpart B—Transfer Treaty Prisoners and Parolees

§ 2.68 Prisoners transferred pursuant to treaty.

(a) *Applicability, jurisdiction and statutory interpretation.* (1) Prisoners transferred pursuant to treaty (transferees) who committed their offenses on or after November 1, 1987, shall receive a special transferee hearing pursuant to the procedures found in this section and 18 U.S.C. 4106A. Transferees who committed their offenses prior to November 1, 1987, are immediately eligible for parole and shall receive a parole hearing pursuant to procedures found at 28 CFR 2.13. The Parole Commission shall treat the foreign conviction as though it were a lawful conviction in a United States District Court.

(2) The jurisdiction of the Commission to set a release date and periods and conditions of supervised release extends until the transferee is released from prison or the transferee's case is otherwise transferred to a district court pursuant to an order of the Commission.

(3) It is the Commission's interpretation of 18 U.S.C. 4106A that every transferee is entitled to a release date determination by the Commission after considering the applicable sentencing guidelines in effect at the time of the hearing. Upon release from imprisonment the transferee may be required to serve a period of supervised release pursuant to section 5D1.2 of the sentencing guidelines. The combination of the period of imprisonment that results from the release date set by the Commission and the period of supervised release shall not exceed the full term of the sentence imposed by the foreign court. The combined periods of imprisonment and supervised release may be less than the full term of the sentence imposed by the foreign court unless the applicable treaty is found to require otherwise.

(4) The applicable offense guideline provision is determined by selecting the offense in the U.S. Code that is most similar to the offense for which the transferee was convicted in the foreign court. In so doing, the Commission considers itself required by law

and treaty to respect the offense definitions contained in the foreign criminal code under which the prisoner was convicted, as well as the official documents supplied by the foreign court.

(5) The release date that is determined by the Commission under 18 U.S.C. 4106A(b)(1)(A) is a prison release determination and does not represent the imposition of a new sentence for the transferee. However, the release date shall be treated by the Bureau of Prisons as if it were the full term date of a sentence for the purpose of establishing a release date pursuant to 18 U.S.C. 4105(c)(1). The Bureau of Prisons release date shall supersede the release date established by the Parole Commission under 18 U.S.C. 4106A and shall be the date upon which the transferee's period of supervised release commences. If the Commission has ordered ''continue to expiration,'' the 4106A release date is the same as the full term date of the foreign sentence. It is the Commission's interpretation of 18 U.S.C. 4105(c)(1) that the deduction of service credits in either case does not operate to reduce the foreign sentence or otherwise limit the Parole Commission's authority to establish a period of supervised release extending from the date of actual release from prison to the full term date of the foreign sentence.

(6) If the Commission sets a release date under 18 U.S.C. 4106A(b)(1)(A) that is earlier than the mandatory release date established by the Bureau of Prisons under 18 U.S.C. 4105(c)(1), then the release date set by the Commission controls. If the release date set by the Commission under 18 U.S.C. 4106A(b)(1)(A) is equal to or later than the mandatory release date established by the Bureau of Prisons under 18 U.S.C. 4105(c)(1), then the mandatory release date established by the Bureau of Prisons controls.

(7) It is the Commission's interpretation of 18 U.S.C. 4106A that U.S. Code provisions for mandatory minimum terms of imprisonment and supervised release, as well as sentencing guideline provisions implementing such U.S. Code requirements (*e.g.*, section 5G1.1(b) of the sentencing guidelines), were not intended by Congress to be applicable in an 18 U.S.C. 4106A(b)(1)(A) determination. Alternatively, it is the Commission's position that there is good cause in every transfer treaty case for a departure from any statutorily required minimum sentence provision in the sentencing guidelines, including section 5G1.1(b) of the sentencing guidelines, because Congress did not enact mandatory sentence laws with transferees in mind. Thus, in every transfer treaty case, the release date will be determined through an exercise of Commission discretion, according to the sentencing guideline range that is derived from a case-specific ''similar offense'' determination, rather than by reference to any provision concerning mandatory minimum sentences of imprisonment or terms of supervised release.

(b) *Interview upon entry*. Following the transferee's entry into the United States, the transferee shall, without unnecessary delay, be interviewed by a United States Probation Officer who shall inform the transferee of his rights under this regulation. The transferee shall be given the appropriate forms for appointment of counsel pursuant to 18 U.S.C. 3006(A) at the interview if appointment of counsel is requested.

(c) *Postsentence report*. A postsentence investigation report, which shall include an estimated sentencing classification and sentencing guideline range, shall be prepared by the probation office in the district of entry (or the transferee's home district). Disclosure of the postsentence report shall be made as soon as the report is completed, by delivery of a copy of the report to the transferee and his or her counsel (if any). Confidential material contained in the postsentence investigation report may be withheld pursuant to the procedures of 18 U.S.C. 4208(c). Copies of all documents provided by the transferring country relating to the transferee shall be appended to the postsentence report when disclosed to the transferee and when transmitted to the Commission.

(d) *Opportunity to object*. The transferee (or counsel) shall have thirty calendar days after disclosure of the postsentence report to transmit any objections to the report he or she may have, in writing, to the Commission with a copy to the probation officer.

The Commission shall review the objections and may request that additional information be submitted by the probation officer in the form of an addendum to the postsentence report. Any disputes of fact or disputes concerning application of the sentencing guidelines shall be resolved at the special transferee hearing.

(e) *Special transferee hearing*. A special transferee hearing shall be conducted within 180 days from the transferee's entry into the United States, or as soon as is practicable following completion of the postsentence report along with any corrections or addendum to the report and appointment of counsel for an indigent transferee.

(1) *Waivers*. The transferee may waive the special transferee hearing on a form provided for that purpose, and the Commission may either:

(A) Set a release date that falls within 60 days of receipt of the waiver and establish a period and conditions of supervised release; or

(B) Reject the waiver and schedule a hearing.

(2) *Short-term cases*. In the case of a transferee who has less than six months from the date of his entry into the United States to his release date as calculated by the Bureau of Prisons under 18 U.S.C. 4105, the Commission may, without conducting a hearing or awaiting a waiver, set a release date and a period and conditions of supervised release. In such cases, the period of supervised release shall not exceed the minimum necessary to satisfy the applicable sentencing guideline (but may extend to the full-term of the foreign sentence if such period is shorter than the minimum of applicable sentencing guideline). The transferee may petition the Commission for a more favorable decision within 60 days of the Commission's determination, and the Commission may act upon the petition regardless of whether or not the transferee has been released from prison.

(f) *Representation*. The transferee shall have the opportunity to be represented by counsel (retained by the transferee or, if financially unable to retain counsel, counsel shall be provided pursuant to 18 U.S.C. 3006(A)), at all stages of the proceeding set forth in this section. The transferee may select a non-lawyer representative as provided in 28 CFR 2.61.

(g) *The decisionmaking criteria*. The Commission shall apply the guidelines promulgated by the United States Sentencing Commission, as though the transferee were convicted in a United States District Court of a statutory offense most nearly similar to the offense of which the transferee was convicted in the foreign court. The Commission shall take into account the offense definition under foreign law, the length of the sentence permitted by that law, and the underlying circumstances of the offense behavior, to establish a guideline range that fairly reflects the seriousness of the offense behavior committed in the foreign country.

(h) *Hearing procedures*. Special transferee hearings shall be conducted by a hearing examiner. Each special transferee hearing shall be recorded by a certified court reporter and the proceedings shall be transcribed if the determination of the Commission is appealed. The following procedures shall apply at a special transferee proceeding, unless waived by the transferee:

(1) The examiner shall inquire whether the transferee and his counsel have had an opportunity to read and discuss the postsentence investigation report and whether the transferee is prepared to go forward with the hearing. If not, the transferee shall be given the opportunity to continue the hearing.

(2) The transferee shall have an opportunity to present documentary evidence and to testify on his own behalf.

(3) Oral testimony of interested parties may be taken with prior advance permission of the Regional Commissioner.

(4) The transferee and his counsel shall be afforded the opportunity to comment upon the guideline estimate contained in the postsentence investigation report (and the addendum, if any), and to present arguments and information relating to the Commission's final guideline determination and decision.

(5) Disputes of material fact shall be resolved by a preponderance of the evidence, with written recommended findings by the examiner unless the examiner determines, on the record, not to take the controverted matter into account.

(6) The transferee shall be notified of the examiner's recommended findings of fact, and the examiner's recommended determination and reasons therefore, at the conclusion of the hearing. The case shall thereafter be reviewed by the Executive Hearing Examiner pursuant to § 2.23, and the Commission shall make its determination upon a panel recommendation.

(i) *Final decision.* (1) The Commission shall render a decision as soon as practicable and without unnecessary delay. Decisions shall be made upon a concurrence of two votes of the National Commissioners. The decision shall set a release date and a period and conditions of supervised release. If the Commission determines that the appropriate release date under 18 U.S.C. 4106A is the full term date of the foreign sentence, the Commission will order the transferee to ''continue to expiration''.

(2) Whenever the Bureau of Prisons applies service credits under 18 U.S.C. 4105 to a release date established by the Commission, the release date used by the Bureau of Prisons shall be the date established by the Parole Commission pursuant to the sentencing guidelines and not a date that resulted from any adjustment made to achieve comparable punishment with a similarly-situated U.S. Code offender. The application of service credits under 18 U.S.C. 4105 shall supersede any previous release date set by the Commission. The Commission may, for the purpose of facilitating the application of service credits by the Bureau of Prisons, reopen any case on the record to clarify the correct release date to be used, and the period of supervised release to be served.

(3) The Commission may, in its discretion, defer a decision and order a rehearing, provided that a statement of the reason for ordering a rehearing is issued to the transferee and the transferee's counsel (if any).

(4) The Commission's final decision shall be supported by a statement of reasons explaining:

(i) The similar offense selected as the basis for the Commission's decision;

(ii) The basis for the guideline range applied; and

(iii) The reason for making a release determination above or below the guideline range. If the release date is within a guideline range that exceeds twenty-four months, the Commission shall identify the reason for the release date selected.

(j) *Appeal.* The transferee shall be advised of his right to appeal the decision of the Commission to the United States Court of Appeals that has jurisdiction over the district in which the transferee is confined.

(k) *Reopening or modification of a determination prior to transfer of jurisdiction.* (1) A hearing and assistance of counsel will be provided to the transferee whenever a case is reopened under subparagraphs (2), (3), (4), and (5) below unless:

(i) Waived by the transferee; or

(ii) The action to be taken is favorable and no factual issue must be resolved.

(2) The Commission may reopen and modify a determination based upon information which was not previously considered. Such information must, however, be contained in the record of the foreign sentencing court.

(3) The Commission may reopen and modify a determination of the terms and conditions of supervised release. Modifications may include approval or disapproval of the transferee's release plan.

(4) The Commission shall reopen and modify a determination that has been found on appeal to have been imposed in violation of the law, to have been imposed as a result of an incorrect application of the sentencing guidelines, or to have been unreasonable.

(5) The Commission may reopen and modify a determination upon consideration of the factors listed in section 5K1.1 of the sentencing guidelines if the transferee provides substantial assistance to law enforcement authorities, and that assistance was not previously considered by the Commission. The Commission will treat a request from a

foreign or a domestic law enforcement authority as the equivalent of a ''motion of the government.''

(6) The Commission may modify a determination based upon a clerical mistake or other error in accordance with Federal Rules of Criminal Procedure Rule 36.

(7) The Commission may reopen and modify the release date if it determines that a circumstance set forth in 18 U.S.C. 3582(c) is satisfied.

(l) *Supervised release.* (1) If a period of supervised release is imposed, the Commission presumes that the recommended conditions of supervised release in section 5D1.3(a) and (c) of the sentencing guidelines, a condition requiring the transferee to report to the probation office within 72 hours of release from the custody of the Bureau of Prisons, a condition that the transferee not commit another Federal, state or local crime, and a condition that the transferee not possess a firearm or other dangerous weapon are reasonably necessary in every case. These conditions, therefore, shall be imposed unless the Commission finds otherwise. The Commission may also impose special conditions of supervised release whenever deemed reasonably necessary in an individual case.

(2) If the transferee is released pursuant to a date established by the Bureau of Prisons under 18 U.S.C. 4105(c)(1), then the period of supervised release commences upon the transferee's release from imprisonment.

[54 FR 27840, June 30, 1989, as amended at 55 FR 39269, Sep. 26, 1990; 58 FR 30705, May 27, 1993; 59 FR 26425, May 20, 1994; 60 FR 18354, Apr. 11, 1995; 61 FR 38570, July 25, 1996; 61 FR 54096, 54097, Oct. 17, 1996; 62 FR 40270, July 28, 1997. Redesignated at 63 FR 39176, July 21, 1998, and amended at 67 FR 70694, Nov. 26, 2002]

§ 2.69 [Reserved]

Subpart C—District of Columbia Code: Prisoners and Parolees

SOURCE: 65 FR 45888, July 26, 2000, unless otherwise noted.

§ 2.70 Authority and functions of the U.S. Parole Commission with respect to District of Columbia Code offenders.

(a) The U.S. Parole Commission shall exercise authority over District of Columbia Code offenders pursuant to section 11231 of the National Capital Revitalization and Self-Government Improvement Act of 1997, Public Law 105–33, 111 Stat. 712, and D.C. Code 24–409. The rules in this subpart shall govern the operation of the U.S. Parole Commission with respect to D.C. Code offenders and shall constitute the parole rules of the District of Columbia, as amended and supplemented pursuant to section 11231(a)(1) of the Act.

(b) The Commission shall have sole authority to grant parole, and to establish the conditions of release, for all District of Columbia Code prisoners who are serving sentences for felony offenses, and who are eligible for parole by statute, including offenders who have been returned to prison upon the revocation of parole or mandatory release. (D.C. Code 24–404 and 408). The above authority shall include youth offenders who are committed to prison for treatment and rehabilitation based on felony convictions under the D.C. Code. (D.C. Code 24–904(a).)

(c) The Commission shall have authority to recommend to the Superior Court of the District of Columbia a reduction in the minimum sentence of a District of Columbia Code prisoner, if the Commission deems such recommendation to be appropriate. (D.C. Code 24–401(c).)

(d) The Commission shall have authority to grant parole to a prisoner who is found to be geriatric, permanently incapacitated, or terminally ill, notwithstanding the minimum term imposed by the sentencing court. (D.C. Code 24–461 through 467.)

(e) The Commission shall have authority over all District of Columbia Code felony offenders who have been released to parole or mandatory release supervision, including the authority to return such offenders to prison upon an order of revocation. (D.C. Code 24–406.)

[65 FR 45888, July 26, 2000, as amended at 68 FR 41530, July 14, 2003]

§ 2.71 Application for parole.

(a) A prisoner (including a committed youth offender) desiring to apply for parole shall execute an application form as prescribed by the Commission. Such forms shall be available at each institution and shall be provided to a prisoner who is eligible for parole consideration. The Commission may then conduct an initial hearing or grant an effective date of parole on the record. A prisoner who receives an initial hearing need not apply for subsequent hearings.

(b) To the extent practicable, the initial hearing for an eligible adult prisoner who has applied for parole shall be held at least 180 days prior to such prisoner's date of eligibility for parole. The initial hearing for a committed youth offender shall be scheduled during the first 120 days after admission to the institution that is responsible for developing his rehabilitative program.

(c) A prisoner may knowingly and intelligently waive any parole consideration on a form provided for that purpose. A prisoner who declines either to apply for or waive parole consideration shall be deemed to have waived parole consideration.

(d) A prisoner who waives parole consideration may later apply for parole and be heard during the next visit of the Commission to the institution at which the prisoner is confined, provided that the prisoner has applied for parole at least 60 days prior to the first day of the month in which such visit of the Commission occurs. In no event, however, shall such prisoner be heard at an earlier date than that set forth in paragraph (b) of this section.

§ 2.72 Hearing procedure.

(a) At the initial hearing the examiner shall review with the prisoner the guidelines at § 2.80, and shall discuss with the prisoner such information as the examiner deems relevant, including the prisoner's offense behavior, criminal history, institutional record, health status, release plans, and community support. If the examiner determines that the available file material is not adequate for this purpose the examiner may order the hearing to be postponed to the next docket so that the missing information can be requested.

(b) A prisoner may have a representative at the hearing pursuant to § 2.13(b) and the opportunity for prehearing disclosure of file material pursuant to § 2.55.

(c) A victim of a crime, or a representative of the immediate family of a victim if the victim has died, shall have the right:

(1) To be present at the parole hearings of each offender who committed the crime, and

(2) To testify and/or offer a written or recorded statement as to whether or not parole should be granted, including information and reasons in support of such statement. A written statement may be submitted at the hearing or provided separately. The prisoner may be excluded from the hearing room during the appearance of a victim or representative who gives testimony. In lieu of appearing at a parole hearing, a victim or representative may request permission to appear before an examiner (or other staff member), who shall record and summarize the victim's or representative's testimony. Whenever new and significant information is provided under this rule, the hearing examiner will summarize the information at the parole hearing and will give the prisoner an opportunity to respond. Such summary shall be consistent with a reasonable request for confidentiality by the victim or representative.

(d) Attorneys, family members, relatives, friends of the prisoner, or other interested persons desiring to submit information pertinent to any prisoner, may do so at any time, but such information must be received by the Commission at least 30 days prior to a scheduled hearing in order to be considered at that hearing. Such persons may also request permission to appear at the offices of the Commission to speak to a Commission staff member, provided such request is received at least 30 days prior to the scheduled hearing. The purpose of this office visit will be to supplement the Commission's record with pertinent factual information concerning the prisoner, which shall be placed in the record for consideration at the hearing. An office visit at a time other than set forth in

this paragraph may be authorized only if the Commission finds good cause based upon a written request setting forth the nature of the information to be discussed. See § 2.22.

(e) A full and complete recording of every parole hearing shall be retained by the Commission. Upon a request pursuant to § 2.56, the Commission shall make available to any eligible prisoner such record as the Commission has retained of the hearing.

(f) Because parole decisions must be reached through a record-based hearing and voting process, no contacts shall be permitted between any person attempting to influence the Commission's decision-making process, and the examiners and Commissioners of the Commission, except as expressly provided in this subpart.

[65 FR 45888, July 26, 2000, as amended at 68 FR 41530, July 14, 2003; 69 FR 5274, Feb. 4, 2004]

§ 2.73 Parole suitability criteria.

(a) In accordance with D.C. Code 24–404(a), the Commission shall be authorized to release a prisoner on parole in its discretion after the prisoner has served the minimum term of the sentence imposed, if the following criteria are met:

(1) The prisoner has substantially observed the rules of the institution;

(2) There is a reasonable probability that the prisoner will live and remain at liberty without violating the law; and

(3) In the opinion of the Commission, the prisoner's release is not incompatible with the welfare of society.

(b) It is the policy of the Commission with respect to District of Columbia Code offenders that the minimum term imposed by the sentencing court presumptively satisfies the need for punishment for the crime of which the prisoner has been convicted, and that the responsibility of the Commission is to account for the degree and the seriousness of the risk that the release of the prisoner would entail. This responsibility is carried out by reference to the Salient Factor Score and the Point Assignment Table at § 2.80. However, there may be exceptional cases in which the gravity of the offense is sufficient to warrant an upward departure from § 2.80 and denial of parole.

[65 FR 45888, July 26, 2000, as amended at 68 FR 41530, July 14, 2003]

§ 2.74 Decision of the Commission.

(a) Following each initial or subsequent hearing, the Commission shall render a decision granting or denying parole, and shall provide the prisoner with a notice of action that includes an explanation of the reasons for the decision. The decision shall ordinarily be issued within 21 days of the hearing, excluding weekends and holidays.

(b) Whenever a decision is rendered within the applicable guideline established in this subpart, it will be deemed a sufficient explanation of the Commission's decision for the notice of action to set forth how the guideline was calculated. If the decision is a departure from the guidelines, the notice of action shall include the reasons for such departure.

(c) The Commission shall resolve relevant issues of fact in accordance with § 2.19(c). Decisions granting or denying parole shall be based on the concurrence of two Commissioners, except that three Commissioner votes shall be required if the decision differs from the decision recommended by the examiner panel by more than six months. A decision releasing a parolee from active supervision shall also be based on the concurrence of two Commissioners. All other decisions, including decisions on revocation and reparole made pursuant to § 2.105(c), shall be based on the vote of one Commissioner, except as otherwise provided in this subpart.

[65 FR 45888, July 26, 2000, as amended at 69 FR 68792, Nov. 26, 2004]

§ 2.75 Reconsideration proceedings.

(a)(1) Following an initial or subsequent hearing, the Commission may—

(i) Set an effective date of parole within nine months of the date of the hearing;

(ii) Set a presumptive parole date at least ten months but not more than three years from the date of the hearing;

(iii) Continue the prisoner to the expiration of sentence if the prisoner's

mandatory release date is within three years of the date of the hearing;

(iv) Schedule a reconsideration hearing at three years from the month of the hearing; or

(v) Remand the case for a rehearing on the next available docket (but no later than 180 days from the date of the hearing) for the consideration of additional information.

(2) *Exceptions.* (i) With respect to the rule on three-year reconsideration hearings. If the prisoner's current offense behavior resulted in the death of a victim and, at the time of the hearing, the prisoner must serve more than three years before reaching the minimum of the applicable guideline range, the Commission may schedule a reconsideration hearing at a date up to five years from the month of the last hearing, but not beyond the minimum of the applicable guideline range.

(ii) With respect to youth offenders. Regardless of whether a presumptive parole date has been set, a reconsideration hearing shall be conducted every twelve months for a youth offender, and on the next available docket after the Commission is informed that the prisoner has completed his program plan.

(b) When a rehearing is scheduled, the prisoner shall be given a rehearing during the month specified by the Commission, or on the docket of hearings immediately preceding that month if no docket of hearings is scheduled for the month specified.

(c) At a reconsideration hearing, the Commission may take any action that it could take at an initial hearing. The scheduling of a reconsideration hearing does not imply that parole will be granted at such hearing.

(d) Prior to a parole reconsideration hearing, the Commission shall review the prisoner's record, including an institutional progress report which shall be submitted 60 days prior to the hearing. Based on its review of the record, the Commission may grant an effective date of parole without conducting the scheduled hearing.

(e) Notwithstanding a previously established reconsideration hearing, the Commission may reopen any case for a special reconsideration hearing, as provided in §2.28, upon the receipt of new and significant information concerning the prisoner.

[65 FR 70664, Nov. 27, 2000, as amended at 67 FR 57945, Sept. 13, 2002; 69 FR 5274, Feb. 4, 2004]

§2.76 Reduction in minimum sentence.

(a) A prisoner who has served three or more years of the minimum term of his or her sentence may request the Commission to file an application with the sentencing court for a reduction in the minimum term pursuant to D.C. Code 24–401c. The prisoner's request to the Commission shall be in writing and shall state the reasons that the prisoner believes such request should be granted. The Commission shall require the submission of a special progress report before approving such a request.

(b) Approval of a prisoner's request under this section shall require the concurrence of a majority of the Commissioners holding office.

(c) Pursuant to D.C. Code 24–401c, the Commission may file an application to the sentencing court for a reduction of a prisoner's minimum term if the Commission finds that:

(1) The prisoner has completed three years of the minimum term imposed by the court;

(2) The prisoner has shown, by report of the responsible prison authorities, an outstanding response to the rehabilitative program(s) of the institution;

(3) The prisoner has fully observed the rules of each institution in which the prisoner has been confined;

(4) The prisoner appears to be an acceptable risk for parole based on both the prisoner's pre- and post-incarceration record; and

(5) Service of the minimum term imposed by the court does not appear necessary to achieve appropriate punishment and deterrence.

(d) If the Commission approves a prisoner's request under this section, an application for a reduction in the prisoner's minimum term shall be forwarded to the U.S. Attorney for the District of Columbia for filing with the sentencing court. If the U.S. Attorney objects to the Commission's recommendation, the U.S. Attorney shall provide the government's objections in writing for consideration by the Commission. If, after consideration of the

material submitted, the Commission declines to reconsider its previous decision, the U.S. Attorney shall file the application with the sentencing court.

(e) If a prisoner's request under this section is denied by the Commission, there shall be a waiting period of two years before the Commission will again consider the prisoner's request, absent exceptional circumstances.

[65 FR 45888, July 26, 2000, as amended at 68 FR 41530, July 14, 2003]

§ 2.77 Medical parole.

(a) Upon receipt of a report from the institution in which the prisoner is confined that the prisoner is terminally ill, or is permanently and irreversibly incapacitated by a physical or medical condition that is not terminal, the Commission shall determine whether or not to release the prisoner on medical parole. Release on medical parole may be ordered by the Commission at any time, whether or not the prisoner has completed his or her minimum sentence. Consideration for medical parole shall be in addition to any other parole for which a prisoner may be eligible.

(b) A prisoner may be granted a medical parole on the basis of terminal illness if:

(1) The institution's medical staff has provided the Commission with a reasonable medical judgment that the prisoner is within six months of death due to an incurable illness or disease; and

(2) The Commission finds that:

(i) The prisoner will not be a danger to himself or others; and

(ii) Release on parole will not be incompatible with the welfare of society.

(c) A prisoner may be granted a medical parole on the basis of permanent and irreversible incapacitation only if the Commission finds that:

(1) The prisoner will not be a danger to himself or others because his condition renders him incapable of continued criminal activity; and

(2) Release on parole will not be incompatible with the welfare of society.

(d) The seriousness of the prisoner's crime shall be considered in determining whether or not a medical parole should be granted prior to completion of the prisoner's minimum sentence.

(e) A prisoner, or the prisoner's representative, may apply for a medical parole by submitting an application to the institution case management staff, who shall forward the application, accompanied by a medical report and any recommendations, within 15 days. The Commission shall render a decision within 15 days of receiving the application and report.

(f) A prisoner, the prisoner's representative, or the institution may request the Commission to reconsider its decision on the basis of changed circumstances.

(g) Notwithstanding any other provision of this section :

(1) A prisoner who has been convicted of first degree murder or who has been sentenced for a crime committed while armed under D.C. Code 22–4502, 22–4504(b), or 22–2803, shall not be eligible for medical parole (D.C. Code 24–467); and

(2) A prisoner shall not be eligible for medical parole on the basis of a physical or medical condition that existed at the time the prisoner was sentenced (D.C. Code 24–462).

[65 FR 45888, July 26, 2000, as amended at 68 FR 41530, July 14, 2003]

§ 2.78 Geriatric parole.

(a) Upon receipt of a report from the institution in which the prisoner is confined that a prisoner who is at least 65 years of age has a chronic infirmity, illness, or disease related to aging, the Commission shall determine whether or not to release the prisoner on geriatric parole. Release on geriatric parole may be ordered by the Commission at any time, whether or not the prisoner has completed his or her minimum sentence. Consideration for geriatric parole shall be in addition to any other parole for which a prisoner may be eligible.

(b) A prisoner may be granted a geriatric parole if the Commission finds that:

(1) There is a low risk that the prisoner will commit new crimes; and

(2) The prisoner's release would not be incompatible with the welfare of society.

(c) The seriousness of the prisoner's crime, and the age at which it was

committed, shall be considered in determining whether or not a geriatric parole should be granted prior to completion of the prisoner's minimum sentence.

(d) A prisoner, or a prisoner's representative, may apply for a geriatric parole by submitting an application to the institution case management staff, who shall forward the application, accompanied by a medical report and any recommendations, within 30 days. The Commission shall render a decision within 30 days of receiving the application and report.

(e) In determining whether or not to grant a geriatric parole, the Commission shall consider the following factors (D.C. Code 24–465(c)(1)–(7)):

(1) Age of the prisoner;

(2) Severity of illness, disease, or infirmities;

(3) Comprehensive health evaluation;

(4) Institutional behavior;

(5) Level of risk for violence;

(6) Criminal history; and

(7) Alternatives to maintaining geriatric long-term prisoners in traditional prison settings.

(f) A prisoner, the prisoner's representative, or the institution, may request the Commission to reconsider its decision on the basis of changed circumstances.

(g) Notwithstanding any other provision of this section:

(1) A prisoner who has been convicted of first degree murder or who has been sentenced for a crime committed while armed under D.C. Code 22–4502, 22–4504(b), or 22–2803, shall not be eligible for geriatric parole (D.C. Code 24–467); and

(2) A prisoner shall not be eligible for geriatric parole on the basis of a physical or medical condition that existed at the time the prisoner was sentenced (D.C. Code 24–462).

[65 FR 45888, July 26, 2000, as amended at 68 FR 41530, July 14, 2003]

§ 2.79 Good time forfeiture.

Although a forfeiture of good time will not bar a prisoner from receiving a parole hearing, D.C. Code 24–404 permits the Commission to parole only those prisoners who have substantially observed the rules of the institution. Consequently, the Commission will consider a grant of parole for a prisoner with forfeited good time only after a thorough review of the circumstances underlying the disciplinary infraction(s). The Commission must be satisfied that the prisoner has served a period of imprisonment sufficient to outweigh the seriousness of the prisoner's misconduct.

[65 FR 45888, July 26, 2000, as amended at 68 FR 41531, July 14, 2003]

§ 2.80 Guidelines for D.C. Code offenders.

(a)(1) *Applicability in general.* Except as provided below, the guidelines in paragraphs (b)–(n) of this section apply at an initial hearing or rehearing conducted for any prisoner.

(2) *Reparole decisions.* Reparole decisions shall be made in accordance with § 2.81.

(3) *Youth offenders.* A prisoner sentenced under the Youth Rehabilitation Act shall be considered for parole under these guidelines pursuant to paragraph (a)(1) of this section, except that the prisoner shall be given rehearings in accordance with the schedule at § 2.75(a)(2)(ii) and the prisoner's program achievements shall be considered in the parole release decision in accordance with § 2.106. The guidelines at paragraphs (k)–(m) of this section for awarding superior program achievement and subtracting the award in determining the total guideline range shall not apply.

(4) Prisoners considered under the guidelines of the former District of Columbia Board of Parole. For a prisoner whose initial hearing was held before August 5, 1998, the Commission shall render its decision by reference to the guidelines of the former D.C. Board of Parole in effect on August 4, 1998. However, when a decision outside such guidelines has been made by the Board, or is ordered by the Commission, the Commission may determine the appropriateness and extent of the departure by comparison with the guidelines of § 2.80. The Commission may also correct any error in the calculation of the D.C. Board's guidelines.

(5) Prisoners given initial hearings under the guidelines in effect from August 5, 1998 through December 3, 2000 (the guidelines formerly found in 28

CFR 2.80, Appendix to § 2.80 (2000)). For a prisoner given an initial hearing under the § 2.80 guidelines in effect from August 5, 1998 through December 3, 2000, the guidelines in paragraphs (b)–(n) of this section shall be applied retroactively subject to the provisions of paragraph (o) of this section.

(b) *Guidelines*. In determining whether an eligible prisoner should be paroled, the Commission shall apply the guidelines set forth in this section. The guidelines assign numerical values to pre-and post-incarceration factors. Decisions outside the guidelines may be made, where warranted, pursuant to paragraph (n) of this section.

(c) *Salient factor score and criminal record*. The prisoner's Salient Factor Score shall be determined by reference to the Salient Factor Scoring Manual in § 2.20. The Salient Factor Score is used to assist the Commission in assessing the probability that an offender will live and remain at liberty without violating the law. The prisoner's record of criminal conduct (including the nature and circumstances of the current offense) shall be used to assist the Commission in determining the probable seriousness of the recidivism that is predicted by the Salient Factor Score.

(d) *Disciplinary infractions*. The Commission shall assess whether the prisoner has been found guilty of committing significant disciplinary infractions while under confinement for the current offense.

(e) *Program achievement*. (1) The Commission shall assess whether the prisoner has demonstrated ordinary or superior achievement in the area of prison programs, industries, or work assignments while under confinement for the current offense. Superior program achievement means program achievement that is beyond the level that the prisoner might ordinarily be expected to accomplish. Credit for program achievement may be granted regardless of whether the guidelines for disciplinary infractions have been applied for misconduct during the same period. The guidelines in this section presume that the prisoner will have ordinary program achievement.

(2) In the case of a prisoner who has declined to participate in institutional programming, a decision in the upper half of the applicable guideline range generally will be warranted, except that in the case of a prisoner who has a base point score of 3 or less, or who has a criminal record involving violence or sexual offenses and who has not participated in available programming to address a potential for criminal behavior of a violent or sexual nature, a decision above the guidelines may be warranted.

(f) *Base point score*. Add the applicable points from Categories I-III of the Point Assignment Table to determine the base point score.

POINT ASSIGNMENT TABLE

Categories	Points
CATEGORY I: RISK OF RECIDIVISM (Salient Factor Score)	
10–8 (Very Good Risk)	+0
7–6 (Good Risk)	+1
5–4 (Fair Risk)	+2
3–0 (Poor Risk)	+3
CATEGORY II: CURRENT OR PRIOR VIOLENCE (Type of Risk)	
Note: Use the highest applicable subcategory. If no subcategory is applicable, score = 0.	
A. Violence in current offense, and any felony violence in two or more prior offenses	+4
B. Violence in current offense, and any felony violence in one prior offense	+3
C. Violence in current offense	+2
D. No violence in current offense and any felony violence in two or more prior offenses	+2
E. Possession of firearm in current offense if current offense is not scored as a crime of violence	+2
F. No violence in current offense and any felony violence in one prior offense	+1
CATEGORY III: DEATH OF VICTIM OR HIGH LEVEL VIOLENCE	
Note: Use highest applicable subcategory. If no subcategory is applicable, score = 0. A current offense that involved high level violence must be scored under both Category II (A, B, or C) and under Category III.	
A. Current offense involved violence (high level violence or other violence) with death of victim resulting	+3
B. Current offense involved attempted murder, conspiracy to murder, solicitation to murder, or any willful violence in which the victim survived despite death having been the most probable result at the time the offense was committed	+2
C. Current offense involved high level violence (other than the behaviors described above)	+1
BASE POINT SCORE (Total of Categories I-III)	

(g) *Definitions and instructions for application of point assignment table*—(1) *Salient factor score* means the salient factor score set forth at § 2.20.

(2) *High level violence* in Category III means any of the following offenses—

(i) Murder;

(ii) Voluntary manslaughter;

(iii) Arson of a building in which a person other than the offender was present or likely to be present at the time of the offense;

(iv) Forcible rape or forcible sodomy (first degree sexual abuse);

(v) Kidnapping, hostage taking, or any armed abduction of a victim during a carjacking or other offense;

(vi) Burglary of a residence while armed with any weapon if a victim was in the residence during the offense;

(vii) Obstruction of justice through violence or threats of violence;

(viii) Any offense involving sexual abuse of a person less than sixteen years of age;

(ix) Mayhem, malicious disfigurement, or any offense defined as other violence in paragraph (g)(4) of this section that results in *serious bodily injury* as defined in paragraph (g)(3) of this section;

(x) Any offense defined as *other violence* in paragraph (g)(4) of this section in which the offender intentionally discharged a firearm;

(3) *Serious bodily injury* means bodily injury that involves a substantial risk of death, unconsciousness, extreme physical pain, protracted and obvious disfigurement, or protracted loss or impairment of the function of a bodily member, organ, or mental faculty.

(4) *Other violence* means any of the following felony offenses that does not qualify as high *level violence*

(i) Robbery;

(ii) Residential burglary;

(iii) Felony assault;

(iv) Felony offenses involving a threat, or risk, of bodily harm;

(v) Felony offenses involving sexual abuse or sexual contact;

(vi) Involuntary manslaughter (excluding negligent homicide).

(5) Attempts, conspiracies, and solicitations shall be scored by reference to the substantive offense that was the object of the attempt, conspiracy, or solicitation; except that Category IIIA shall apply only if death actually resulted.

(6) *Current offense* means any criminal behavior that is either:

(i) Reflected in the offense of conviction, or

(ii) Is not reflected in the offense of conviction but is found by the Commission to be related to the offense of conviction (i.e., part of the same course of conduct as the offense of conviction). In probation violation cases, the current offense includes both the original offense and the violation offense, except that the original offense shall be scored as a prior conviction (with a prior commitment) rather than as part of the current offense, if the prisoner served more than six months in prison for the original offense before his probation commenced

(7) Category IIE applies whenever a firearm is possessed by the offender during, or is used by the offender to commit, any offense that is not scored under Category II(A-D). Category IIE also applies when the current offense is felony unlawful possession of a firearm and there is no other current offense. Possession for purposes of Category IIE includes constructive possession.

(8) Category IIIA applies if the death of a victim is:

(i) Caused by the offender, or

(ii) Caused by an accomplice and the killing was planned or approved by the offender in furtherance of a joint criminal venture.

(h) *Determining the base guideline range*. Determine the base guideline range for adult prisoners from the following table:

Base point score	Base guideline range (months)
3 or less	0
4	12–18
5	18–24
6	36–48
7	54–72
8	72–96
9	110–140
10	156–192

(i) *Months to parole eligibility*. Determine the total number of months until parole eligibility.

(j) *Guideline range for disciplinary infractions*. Determine the applicable guideline range from § 2.36 for any significant disciplinary infractions since

the beginning of confinement on the current offense in the case of an initial hearing, and since the last hearing in the case of a rehearing. If there are no significant disciplinary infractions, this step is not applicable.

(k) *Guidelines for superior program achievement.* If superior program achievement is found, the award for superior program achievement shall be one-third of the number of months during which the prisoner demonstrated superior program achievement. The award is determined on the basis of all time in confinement on the current offense in the case of an initial hearing, and on the basis of time in confinement since the last hearing in the case of a rehearing. If superior program achievement is not found, this step is not applicable.

NOTE: When superior program achievement is found, it is presumed that the award will be based on the total number of months since the beginning of confinement on the current offense in the case of an initial hearing, or since the last hearing in the case of a rehearing. Where, however, the Commission determines that the prisoner did not have superior program achievement during the entire period, it may base its decision solely on the number of months during which the prisoner had superior program achievement.

(l) *Determining the total guideline range at an initial hearing.* At an initial hearing

(1) Add together the minimum of the base point guideline range (from paragraph (h) of this section), the number of months required by the prisoner's parole eligibility date (from (i) of this section), and the minimum of the guideline range for disciplinary infractions, if applicable (from paragraph (j) of this section). Then subtract the award for superior program achievement, if applicable (from paragraph (k) of this section). The result is the minimum of the Total Guideline Range.

(2) Add together the maximum of the base point guideline range (from paragraph (h) of this section), the number of months required by the prisoner's parole eligibility date (from paragraph (i) of this section), and the maximum of the guideline range for disciplinary infractions, if applicable (from paragraph (j) of this section). Then subtract the award for superior program achievement, if applicable (from paragraph (k) of this section). The result is the maximum of the Total Guideline Range.

(m) *Determining the total guideline range at a reconsideration hearing.* At a reconsideration hearing—

(1) Add together the minimum of the Total Guideline Range from the previous hearing, and the minimum of the guideline range for disciplinary infractions since the previous hearing, if applicable (from paragraph (j) of this section). Then subtract the award for superior program achievement, if applicable (from paragraph (k) of this section). The result is the minimum of the Total Guideline Range for the current hearing.

(2) Add together the maximum of the Total Guideline Range from the previous hearing, and the maximum of the guideline range for disciplinary infractions since the previous hearing, if applicable (from paragraph (j) of this section). Then subtract the award for superior program achievement since the previous hearing, if applicable (from paragraph (k) of this section). The result is the maximum of the Total Guideline Range for the current hearing.

(n) *Decisions outside the guidelines.* (1) The Commission may, in unusual circumstances, grant or deny parole to a prisoner notwithstanding the guidelines. Unusual circumstances are case-specific factors that are not fully taken into account in the guidelines, and that are relevant to the grant or denial of parole. In such cases, the Commission shall specify in the notice of action the specific factors that it relied on in departing from the applicable guideline or guideline range. If the prisoner is deemed to be a poorer or more serious risk than the guidelines indicate, the Commission shall determine what Base Point Score would more appropriately fit the prisoner's case, and shall render its initial and rehearing decisions as if the prisoner had that higher Base Point Score. It is to be noted that, in some cases, an extreme level of risk presented by the prisoner may make it inappropriate for the Commission to contemplate a parole at any hearing without a significant change in the prisoner's circumstances.

(2) Factors that may warrant a decision above the guidelines include, but are not limited to, the following:

(i) *Poorer parole risk than indicated by salient factor score.* The offender is a poorer parole risk than indicated by the salient factor score because of—

(A) Unusually persistent failure under supervision (pretrial release, probation, or parole);

(B) Unusually persistent history of criminally related substance (drug or alcohol) abuse and resistance to treatment efforts; or

(C) Unusually extensive prior record (sufficient to make the offender a poorer risk than the ''poor'' prognosis category).

(ii) *More serious parole risk.* The offender is a more serious parole risk than indicated by the total point score because of—

(A) Prior record of violence more extensive or serious than that taken into account in the guidelines;

(B) Current offense demonstrates extraordinary criminal sophistication, criminal professionalism in the employment of violence or threats of violence, or leadership role in instigating others to commit a serious offense;

(C) Unusual cruelty to the victim (beyond that accounted for by scoring the offense as high level violence), or predation upon extremely vulnerable victim;

(D) Unusual propensity to inflict unprovoked and potentially homicidal violence, as demonstrated by the circumstances of the current offense; or

(E) Additional serious offense(s) committed after (or while on bond or fugitive status from) current offense that show unusual capacity for sustained, repeated violent criminal activity.

(3) Factors that may warrant a decision below the guidelines include, but are not limited to, the following:

(i) *Better parole risk than indicated by salient factor score.* The offender is a better parole risk than indicated by the salient factor score because of (applicable only to offenders who are not already in the very good risk category)—

(A) A prior criminal record resulting exclusively from minor offenses;

(B) A substantial crime-free period in the community for which credit is not already given on the Salient Factor Score;

(C) A change in the availability of community resources leading to a better parole prognosis;

(ii) *Other factors:*

(A) Unusually lengthy period of incarceration on the minimum sentence (in relation to the seriousness of the offense and prior record) that warrants an initial parole determination as if the offender were being considered at a rehearing;

(B) Substantial period in custody on other sentence(s) sufficient to warrant a finding in paragraph (n)(3) of this section; or

(C) Clearly exceptional program achievement.

(o) Conversion rules for retroactive application of the § 2.80 guidelines. When the guidelines of this section are retroactively applied, the following conversion rules shall be used.

(1) If the prisoner previously had any points added for negative institutional behavior under the guidelines formerly found in the Appendix to § 2.80 (2000) (*i.e.,* the guidelines in effect from August 5, 1998 through December 3, 2000), the total guideline range shall be increased by the lesser of:

(i) The guideline range from § 2.36 found to apply to the prior misconduct; or

(ii) The range of months obtained when the number of points previously added for negative institutional behavior is multiplied by the rehearing range applicable under the guidelines in the former Appendix to § 2.80 (*e.g.,* if two points previously were added for misconduct and the applicable rehearing range was 18–24 months, then 36–48 months (2 × 18–24) would be added).

(2) If negative institutional behavior previously was sanctioned by the application of a guideline range at § 2.36, the total guideline range shall be increased by that range for that behavior.

(3) If the prisoner previously had an extra point deducted for superior program achievement (as opposed to ordinary program achievement) under the guidelines in the former Appendix to § 2.80, the total guideline range shall be decreased by the rehearing guideline range applicable under the Appendix to § 2.80 guidelines (*e.g.,* if an extra point

previously was subtracted for superior (not ordinary) program achievement and the applicable rehearing range was 18–24 months, then 18–24 months would be subtracted).

(4) Misconduct or superior program achievement since the last hearing shall be considered in accordance with the guidelines of this section.

[65 FR 70665, Nov. 27, 2000, as amended at 67 FR 67946, Sept. 13, 2002]

§ 2.81 Reparole decisions.

(a) If the prisoner is not serving a new, parolable D.C. Code sentence, the Commission's decision to grant or deny reparole on the parole violation term shall be made by reference to the reparole guidelines at § 2.21. The Commission shall establish a presumptive or effective release date pursuant to § 2.12(b), and conduct interim hearings pursuant to § 2.14.

(b) If the prisoner is eligible for parole on a new D.C. Code felony sentence that has been aggregated with the prisoner's parole violation term, the Commission shall make a decision to grant or deny parole on the basis of the aggregate sentence, and in accordance with the guidelines at § 2.80.

(c) If the prisoner is eligible for parole on a new D.C. Code felony sentence but the prisoner's parole violation term has not commenced (*i.e.*, the warrant has not been executed), the Commission shall make a single parole/reparole decision by applying the guidelines at § 2.80. The Commission shall establish an appropriate date for the execution of the outstanding warrant in order for the guidelines at § 2.80 to be satisfied. In cases where the execution of the warrant will not result in the aggregation of the new sentence and the parole violation term, the Commission shall make parole and reparole decisions that are consistent with the guidelines at § 2.80.

(d) All reparole hearings shall be conducted according to the procedures set forth in § 2.72, and may be combined with the holding of a revocation hearing if the prisoner's parole has not previously been revoked. If the prisoner is serving a period of imprisonment imposed upon revocation of his parole by the D.C. Board of Parole, the Commission shall consider all available and relevant information concerning the prisoner's conduct while on parole, including any allegations of criminal or administrative violations left unresolved by the Board, pursuant to the procedures applicable to initial hearings under § 2.72 and § 2.19(c). The same procedures shall apply in the case of any new information concerning criminal or administrative violations of parole presented to the Commission for the first time following the conclusion of a revocation proceeding that resulted in the revocation of parole and the return of the offender to prison.

[65 FR 45888, July 26, 2000, as amended at 66 FR 37137, July 17, 2001]

§ 2.82 Effective date of parole.

(a) An effective date of parole may be granted up to nine months from the date of the hearing.

(b) Except in the case of a medical or geriatric parole, a parole that is granted prior to the completion of the prisoner's minimum term shall not become effective until the prisoner becomes eligible for release on parole.

[65 FR 45888, July 26, 2000, as amended at 67 FR 57946, Sept. 13, 2002]

§ 2.83 Release planning.

(a) All grants of parole shall be conditioned on the development of a suitable release plan and the approval of that plan by the Commission. A parole certificate shall not be issued until a release plan has been approved by the Commission. In the case of mandatory release, the Commission shall review each prisoner's release plan to determine whether the imposition of any special conditions should be ordered to promote the prisoner's rehabilitation and protect the public safety.

(b) If a parole date has been granted, but the prisoner has not submitted a proposed release plan, the appropriate correctional or supervision staff shall assist the prisoner in formulating a release plan for investigation.

(c) After investigation by a Supervision Officer, the proposed release plan shall be submitted to the Commission 30 days prior to the prisoner's parole or mandatory release date.

(d) A Commissioner may retard a parole date for purposes of release planning for up to 120 days without a hearing. If efforts to formulate an acceptable release plan prove futile by the expiration of such period, or if the Offender Supervision staff reports that there are insufficient resources to provide effective supervision for the individual in question, the Commission shall be promptly notified in a detailed report. If the Commission does not order the prisoner to be paroled, the Commission shall suspend the grant of parole and conduct a reconsideration hearing on the next available docket. Following such reconsideration hearing, the Commission may deny parole if it finds that the release of the prisoner without a suitable plan would fail to meet the criteria set forth in § 2.73. However, if the prisoner subsequently presents an acceptable release plan, the Commission may reopen the case and issue a new grant of parole.

(e) The following shall be considered in the formulation of a suitable release plan:

(1) Evidence that the parolee will have an acceptable residence;

(2) Evidence that the parolee will be legitimately employed as soon as released; provided, that in special circumstances, the requirement for immediate employment upon release may be waived by the Commission;

(3) Evidence that the necessary aftercare will be available for parolees who are ill, or who have any other demonstrable problems for which special care is necessary, such as hospital facilities or other domiciliary care; and

(4) Evidence of availability of, and acceptance in, a community program in those cases where parole has been granted conditioned upon acceptance or participation in a specific community program.

§ 2.84 Release to other jurisdictions.

The Commission, in its discretion, may parole any prisoner to live and remain in a jurisdiction other than the District of Columbia.

§ 2.85 Conditions of release.

(a) *General conditions of release.* (1) The conditions set forth in § 2.204(a)(3)-(6) apply for the reasons set forth in § 2.204(a)(1). These conditions are printed on the certificate of release issued to each releasee.

(2)(i) The refusal of a prisoner who has been granted a parole date to sign the certificate of release (or any other document necessary to fulfill a condition of release) constitutes withdrawal of that prisoner's application for parole as of the date of refusal. To be considered for parole again, the prisoner must reapply for parole consideration.

(ii) A prisoner who is released to supervision through good-time deduction who refuses to sign the certificate of release is nevertheless bound by the conditions set forth in that certificate.

(b) *Special conditions of release.* The Commission may impose a condition other than one of the general conditions of release if the Commission determines that such condition is necessary to protect the public from further crimes by the releasee and provide adequate supervision of the releasee. Examples of special conditions of release that the Commission frequently imposes are found at § 2.204(b)(2).

(c) *Changing conditions of release.* The provisions of § 2.204(c) apply.

(d) *Application of release conditions to absconder.* The provisions of § 2.204(d) apply.

(e) *Supervision officer guidance.* The provisions of § 2.204(f) apply.

(f) *Definitions.* For purposes of this section—

(1) The terms *supervision officer*, *domestic violence crime*, *approved offender-rehabilitation program* and *firearm*, as used in § 2.204, have the meanings given those terms by § 2.204(g);

(2) The term *releasee*, as used in this section and in § 2.204, means a person convicted of an offense under the District of Columbia Code who has been released on parole or released through good-time deduction; and

(3) The term *certificate of release*, as used in this section and in § 2.204, means the certificate of parole or mandatory release delivered to the releasee under § 2.86.

[68 FR 41700, July 15, 2003]

§ 2.86 Release on parole; rescission for misconduct.

(a) When a parole effective date has been set, actual release on parole on

that date shall be conditioned upon the individual maintaining a good conduct record in the institution or prerelease program to which the prisoner has been assigned.

(b) The Commission may reconsider any grant of parole prior to the prisoner's actual release on parole, and may advance or retard a parole effective date or rescind a parole date previously granted based upon the receipt of any new and significant information concerning the prisoner, including disciplinary infractions. The Commission may retard a parole date for disciplinary infractions (*e.g.*, to permit the use of graduated sanctions) for up to 120 days without a hearing, in addition to any retardation ordered under § 2.83(d).

(c) If a parole effective date is rescinded for disciplinary infractions, an appropriate sanction shall be determined by reference to § 2.36.

(d) After a prisoner has been granted a parole effective date, the institution shall notify the Commission of any serious disciplinary infractions committed by the prisoner prior to the date of actual release. In such case, the prisoner shall not be released until the institution has been advised that no change has been made in the Commission's order granting parole.

(e) A grant of parole becomes operative upon the authorized delivery of a certificate of parole to the prisoner, and the signing of that certificate by the prisoner, who thereafter becomes a parolee.

[65 FR 70669, Nov. 27, 2000, as amended at 67 FR 57946, Sept. 13, 2002]

§ 2.87 Mandatory release.

(a) When a prisoner has been denied parole at the initial hearing and all subsequent considerations, or parole consideration is expressly precluded by statute, the prisoner shall be released at the expiration of his or her imposed sentence less the time deducted for any good time allowances provided by statute.

(b) Any prisoner having served his or her term or terms less deduction for good time shall, upon release, be deemed to be released on parole until the expiration of the maximum term or terms for which he or she was sentenced, except that if the offense of conviction was committed before April 11, 1987, such expiration date shall be less one hundred eighty (180) days. Every provision of these rules relating to an individual on parole shall be deemed to include individuals on mandatory release.

§ 2.88 Confidentiality of parole records.

(a) Consistent with the Privacy Act of 1974 (5 U.S.C. 552(b)), the contents of parole records shall be confidential and shall not be disclosed outside the Commission except as provided in paragraphs (b) and (c) of this section.

(b) Information that is subject to release to the general public without the consent of the prisoner shall be limited to the information specified in § 2.37.

(c) Information other than as described in § 2.37 may be disclosed without the consent of the prisoner only pursuant to the provisions of the Privacy Act of 1974 (5 U.S.C. 552(b)) and § 2.56.

§ 2.89 Miscellaneous provisions.

Except to the extent otherwise provided by law, the following sections in Subpart A of this part are also applicable to District of Columbia Code offenders:

2.5 (Sentence aggregation)
2.7 (Committed fines and restitution orders)
2.8 (Mental competency procedures)
2.10 (Date service of sentence commences)
2.16 (Parole of prisoner in State, local, or territorial institution)
2.19 (Information considered)
2.23 (Delegation to hearing examiners)
2.25 (Hearings by video conference)
2.30 (False information or new criminal conduct; Discovery after release)
2.32 (Parole to local or immigration detainers)
2.56 (Disclosure of Parole Commission file)
2.62 (Rewarding assistance in the prosecution of other offenders: criteria and guidelines)
2.65 (Paroling policy for prisoners serving aggregated U.S. and D.C. Code sentences)

[65 FR 45888, July 26, 2000, as amended at 69 FR 5274, Feb. 4, 2004]

§ 2.90 Prior orders of the Board of Parole.

Any order entered by the Board of Parole of the District of Columbia shall be accorded the status of an order of the Parole Commission unless duly

reconsidered and changed by the Commission at a regularly scheduled hearing. It shall not constitute grounds for reopening a case that the prisoner is subject to an order of the Board of Parole that fails to conform to a provision of this part.

§ 2.91 Supervision responsibility.

(a) Pursuant to D.C. Code 24–133(c), the District of Columbia Court Services and Offender Supervision Agency (CSOSA) shall provide supervision, through qualified Supervision Officers, for all D.C. Code parolees and mandatory releasees under the jurisdiction of the Commission who are released to the District of Columbia. Individuals under the jurisdiction of the Commission who are released to districts outside the D.C. metropolitan area, or who are serving mixed U.S. and D.C. Code sentences, shall be supervised by a U.S. Probation Officer pursuant to 18 U.S.C. 3655.

(b) A parolee or mandatory releasee may be transferred to a new district of supervision with the permission of the supervision offices of both the transferring and receiving district, provided such transfer is not contrary to instructions from the Commission.

[65 FR 45888, July 26, 2000, as amended at 68 FR 41531, July 14, 2003]

§ 2.92 Jurisdiction of the Commission.

(a) Pursuant to D.C. Code 24–221.03(a) and 24–405, the jurisdiction of the Commission over a parolee shall expire on the date of expiration of the maximum term or terms for which he was sentenced, subject to the provisions of this subpart relating to warrant issuance, time in absconder status, and the forfeiture of credit for time on parole in the case of revocation.

(b) The parole of any parolee shall run concurrently with the period of parole, probation, or supervised release under any other Federal, State, or local sentence.

(c) Upon the expiration of the parolee's maximum term as specified in the release certificate, the parolee's Supervision Officer shall issue a certificate of discharge to such parolee and to such other agencies as may be appropriate.

(d) A termination of parole pursuant to an order of revocation shall not affect the Commission's jurisdiction to grant and enforce any further periods of parole, up to the expiration of the offender's maximum term.

[65 FR 45888, July 26, 2000, as amended at 68 FR 41531, July 14, 2003]

§ 2.93 Travel approval.

(a) A parolee's Supervision Officer may approve travel outside the district of supervision without approval of the Commission in the following situations:

(1) Vacation trips not to exceed thirty days.

(2) Trips, not to exceed thirty days, to investigate reasonably certain employment possibilities.

(3) Recurring travel across a district boundary, not to exceed fifty miles outside the district, for purpose of employment, shopping, or recreation.

(b) Specific advance approval by the Commission is required for all foreign travel, employment requiring recurring travel more than fifty miles outside the district, and vacation travel outside the district of supervision exceeding thirty days. A request for such permission shall be in writing and must demonstrate a substantial need for such travel.

(c) A special condition imposed by the Commission prohibiting certain travel shall apply instead of any general rules relating to travel as set forth in paragraph (a) of this section.

(d) The district of supervision for a parolee under the supervision of the D.C. Community Supervision Office of CSOSA shall be the District of Columbia, except that for the purpose of travel permission under this section the district of supervision will include the D.C. metropolitan area as defined in the certificate of parole.

§ 2.94 Supervision reports to Commission.

An initial supervision report to confirm the satisfactory initial progress of the parolee shall be submitted to the Commission 90 days after the parolee's release from prison, by the officer responsible for the parolee's supervision. A regular supervision report shall be submitted to the Commission by the

officer responsible for the supervision of the parolee after the completion of 12 months of continuous community supervision and annually thereafter. The Supervision Officer shall submit such additional reports and information concerning both the parolee, and the enforcement of the conditions of the parolee's supervision, as the Commission may direct. All reports shall be submitted according to the format established by the Commission.

EDITORIAL NOTE: At 67 FR 57946, Sept. 13, 2002, the first sentence of paragraph (a) of § 2.94 was removed. However, paragraph (a) of § 2.94 did not exist in the 2001 Edition of that volume.

§ 2.95 Release from active supervision.

(a) The Commission, in its discretion, may release a parolee or mandatory releasee from further supervision prior to the expiration of the maximum term or terms for which he or she was sentenced.

(b) Two years after release on supervision, and at least annually thereafter, the Commission shall review the status of each parolee to determine the need for continued supervision. In calculating such two-year period there shall not be included any period of release on parole prior to the most recent release, nor any period served in confinement on any other sentence. A review shall also be conducted whenever release from supervision is specially recommended by the parolee's Supervision Officer.

(c) In determining whether to grant release from supervision, the Commission shall apply the following guidelines, provided that case-specific factors do not indicate a need for continued supervision:

(1) For a parolee originally classified in the very good risk category and whose current offense did not involve violence, release from supervision may be ordered after two continuous years of incident-free parole in the community;

(2) For a parolee originally classified in the very good risk category and whose current offense involved violence other than high level violence, release from supervision may be ordered after three continuous years of incident-free parole in the community;

(3) For a parolee originally classified in the very good risk category and whose current offense involved high level violence (without death of victim resulting), release from supervision may be ordered after four continuous years of incident-free parole in the community;

(4) For a parolee originally classified in other than the very good risk category, whose current offense did not involve violence, and whose prior record includes not more than one episode of felony violence, release from supervision may be ordered after three continuous years of incident-free parole in the community;

(5) For a parolee originally classified in other than the very good risk category, and whose current offense involved violence other than high level violence, or whose prior record includes two or more episodes of felony violence, release from supervision may be ordered after four continuous years of incident-free parole in the community;

(6) For a parolee who was originally classified in other than the very good risk category and whose current offense involved high level violence (without death of victim resulting), release from supervision may be ordered after five continuous years of incident-free parole in the community;

(7) For any parolee whose current offense involved high level violence with death of victim resulting, release from supervision may be ordered only upon a case-specific finding that, by reason of age, infirmity, or other compelling factors, the parolee is unlikely to be a threat to the public safety.

(d) Decisions to release from supervision prior to completion of the periods specified in this section may be made where it appears that the parolee is a better risk than indicated by the salient factor score (if originally classified in other than the very good risk category), or a less serious risk than indicated by a violent current offense or prior record (if any). However, release from supervision prior to the completion of two years of incident-free supervision will not be granted in any case unless case-specific factors clearly indicate that continued supervision would be counterproductive to the parolee's rehabilitation.

(e) Except as provided in § 2.99(c), cases with pending criminal charge(s) shall not be released from supervision until the disposition of such charge(s) is known. The term ''incident-free'' parole shall include both any reported violations, and any arrest or law enforcement investigation that raises a reasonable doubt as to whether the parolee has been able to refrain from law violations while on parole.

§ 2.96 Order of release.

(a) When the Commission approves a recommendation for release from active supervision, a written order of release from supervision shall be issued and a copy thereof shall be delivered to the releasee.

(b) Each order of release shall state that the conditions of the releasee's parole are waived, except that it shall remain a condition that the releasee shall not violate any law or engage in any conduct that might bring discredit to the parole system, under penalty of possible withdrawal of the order of release or revocation of parole.

(c) An order of release from supervision shall not release the parolee from the custody of the Attorney General or from the jurisdiction of the Commission before the expiration of the term or terms being served.

§ 2.97 Withdrawal of order of release.

If, after an order of release from supervision has been issued by the Commission, and prior to the expiration date of the sentence(s) being served, the parolee commits any new criminal offense or engages in any conduct that might bring discredit to the parole system, the Commission may, in its discretion, do any of the following:

(a) Issue a summons or warrant to commence the revocation process;

(b) Withdraw the order of release from supervision and return the parolee to active supervision; or

(c) Impose any special conditions to the order of release from supervision.

§ 2.98 Summons to appear or warrant for retaking of parolee.

(a) If a parolee is alleged to have violated the conditions of his release, and satisfactory evidence thereof is presented, the Commission or a member thereof may:

(1) Issue a summons requiring the offender to appear for a probable cause hearing or local revocation hearing; or

(2) Issue a warrant for the apprehension and return of the offender to custody.

(b) A summons or warrant under paragraph (a)(1) of this section may be issued or withdrawn only by the Commission, or a member thereof.

(c) Any summons or warrant under this section shall be issued as soon as practicable after the alleged violation is reported to the Commission, except when delay is deemed necessary. Issuance of a summons or warrant may be withheld until the frequency or seriousness of the violations, in the opinion of the Commission, requires such issuance. In the case of any parolee who is charged with a criminal offense and who is awaiting disposition of such charge, issuance of a summons or warrant may be:

(1) Temporarily withheld;

(2) Issued by the Commission and held in abeyance;

(3) Issued by the Commission and a detainer lodged with the custodial authority; or

(4) Issued for the retaking of the parolee.

(d) A summons or warrant may be issued only within the prisoner's maximum term or terms, except that in the case of a prisoner who has been mandatorily released from a sentence imposed for an offense committed before April 11, 1987, such summons or warrant may be issued only within the maximum term or terms less one hundred eighty days. A summons or warrant shall be considered issued when signed and either:

(1) Placed in the mail; or

(2) Sent by electronic transmission to the appropriate law enforcement authority.

(e) The issuance of a warrant under this section operates to bar the expiration of the parolee's sentence. Such warrant maintains the Commission's jurisdiction to retake the parolee either before or after the normal expiration date of the sentence and to reach a final decision as to the revocation of

parole and the forfeiture of time pursuant to D.C. Code 24–406(a).

(f) A summons or warrant issued pursuant to this section shall be accompanied by a warrant application (or other notice) stating:

(1) The charges against the parolee;

(2) The specific reports and other documents upon which the Commission intends to rely in determining whether a violation occurred and whether to revoke parole;

(3) Notice of the Commission's intent, if the parolee is arrested within the District of Columbia, to hold a probable cause hearing within five days of the parolee's arrest;

(4) A statement of the purpose of the probable cause hearing;

(5) The days of the week on which the Commission regularly holds its dockets of probable cause hearings at the Central Detention Facility;

(6) The parolee's procedural rights in the revocation process; and

(7) The possible actions that the Commission may take.

(g) Every warrant issued by the Board of Parole of the District of Columbia prior to August 5, 2000, shall be deemed to be a valid warrant of the U.S. Parole Commission unless withdrawn by the Commission. Such warrant shall be executed as provided in § 2.99, and every offender retaken upon such warrant shall be treated for all purposes as if retaken upon a warrant issued by the Commission.

[65 FR 45888, July 26, 2000, as amended at 67 FR 2569, Jan. 18, 2002; 68 FR 41531, July 14, 2003]

§ 2.99 Execution of warrant and service of summons.

(a) Any officer of any Federal or District of Columbia correctional institution, any Federal Officer authorized to serve criminal process, or any officer or designated civilian employee of the Metropolitan Police Department of the District of Columbia, to whom a warrant is delivered, shall execute such warrant by taking the parolee and returning him to the custody of the Attorney General.

(b) Upon the arrest of the parolee, the officer executing the warrant shall deliver to the parolee a copy of the warrant application (or other notice provided by the Commission) containing the information described in § 2.98 (f).

(c) If execution of the warrant is delayed pending disposition of local charges, for further investigation, or for some other purpose, the parolee is to be continued under supervision by the Supervision Officer until the normal expiration of the sentence, or until the warrant is executed, whichever first occurs. Monthly supervision reports are to be submitted, and the parolee must continue to abide by all the conditions of release.

(d) If any other warrant for the arrest of the parolee has been executed or is outstanding at the time the Commission's warrant is executed, the arresting officer may, within 72 hours of executing the Commission's warrant, release the parolee to such other warrant and lodge the Commission's warrant as a detainer, voiding the execution thereof, if such action is consistent with the instructions of the Commission. In other cases, a parolee may be released from an executed warrant whenever the Commission finds such action necessary to serve the ends of justice.

(e) A summons to appear at a probable cause hearing or revocation hearing shall be served upon the parolee in person by delivering to the parolee a copy of the summons and the application therefor. Service shall be made by any Federal or District of Columbia officer authorized to serve criminal process and certification of such service shall be returned to the Commission.

(f) Official notification of the issuance of a Commission warrant shall authorize any law enforcement officer within the United States to hold the parolee in custody until the warrant can be executed in accordance with paragraph (a) of this section.

[65 FR 45888, July 26, 2000, as amended at 67 FR 2569, Jan. 18, 2002]

§ 2.100 Warrant placed as detainer and dispositional review.

(a) When a parolee is in the custody of other law enforcement authorities, or is serving a new sentence of imprisonment imposed for a crime committed while on parole or for a violation of

some other form of community supervision, a parole violation warrant may be lodged against him as a detainer.

(b) If the parolee is serving a new sentence of imprisonment, and is eligible and has applied for parole under the Commission's jurisdiction, a dispositional revocation hearing shall be scheduled simultaneously with the initial hearing on the new sentence. In such cases, the warrant shall not be executed except upon final order of the Commission following such hearing, as provided in §2.81(c). In any other cases, the detainer shall be reviewed on the record pursuant to paragraph (c) of this section.

(c) If the parolee is serving a new sentence of imprisonment that does not include eligibility for parole under the Commission's jurisdiction, the Commission shall review the detainer upon the request of the parolee. Following such review, the Commission may:

(1) Withdraw the detainer and order reinstatement of the parolee to supervision upon release from custody, or close the case if the expiration date has passed.

(2) Order a dispositional revocation hearing to be conducted by a hearing examiner or an official designated by the Commission at the institution in which the parolee is confined. In such case, the warrant shall not be executed except upon final order of the Commission following such hearing.

(3) Let the detainer stand until the new sentence is completed. Following the release of the parolee, and the execution of the Commission's warrant, an institutional revocation hearing shall be conducted after the parolee is returned to federal custody.

(d) Dispositional revocation hearings pursuant to this section shall be conducted in accordance with the provisions at §2.103 governing institutional revocation hearings, except that a hearing conducted at a state or local facility may be conducted by a hearing examiner, hearing examiner panel, or other official designated by the Commission. Following a revocation hearing conducted pursuant to this section, the Commission may take any action specified in §2.105.

(1) The date the violation term commences is the date the Commission's warrant is executed. It shall be the policy of the Commission that the parolee's violation term (i.e., the unexpired term that remained to be served at the time the parolee was last released on parole) shall start to run only upon his release from the confinement portion of the sentence for the new offense, or the date of reparole granted pursuant to this subpart, whichever comes first.

(2) A parole violator whose parole is revoked shall be given credit for all time in confinement resulting from any new offense or violation that is considered by the Commission as a basis for revocation, but solely for the limited purpose of satisfying the time ranges in the reparole guidelines at §2.81. The computation of the prisoner's sentence, and forfeiture of time on parole pursuant to D.C. Code 24–406(a), is not affected by such guideline credit.

[65 FR 45888, July 26, 2000, as amended at 68 FR 41531, July 14, 2003]

§2.101 Probable cause hearing and determination.

(a) *Hearing.* A parolee who is retaken and held in custody in the District of Columbia on a warrant issued by the Commission, and who has not been convicted of a new crime, shall be given a probable cause hearing by an examiner of the Commission no later than five days from the date of such retaking. A parolee who is retaken and held in custody outside the District of Columbia, but within the Washington DC metropolitan area, and who has not been convicted of a new crime, shall be given a probable cause hearing by an examiner of the Commission within five days of the parolee's arrival at a facility where probable cause hearings are conducted. The purpose of a probable cause hearing is to determine whether there is probable cause to believe that the parolee has violated parole as charged, and if so, whether a local or institutional revocation hearing should be conducted. If the examiner finds probable cause, the examiner shall schedule a final revocation hearing to be held within 65 days of such parolee's arrest.

(b) *Notice and opportunity to postpone hearing.* Prior to the commencement of each docket of probable cause hearings in the District of Columbia, a list of

the parolees who are scheduled for probable cause hearings, together with a copy of the warrant application for each parolee, shall be sent to the D.C. Public Defender Service. At or before the probable cause hearing, the parolee (or the parolee's attorney) may submit a written request that the hearing be postponed for any period up to thirty days, and the Commission shall ordinarily grant such requests. Prior to the commencement of the probable cause hearing, the examiner shall advise the parolee that the parolee may accept representation by the attorney from the D.C. Public Defender Service who is assigned to that docket, waive the assistance of an attorney at the probable cause hearing, or have the probable cause hearing postponed in order to obtain another attorney and/or witnesses on his behalf. In addition, the parolee may request the Commission to require the attendance of adverse witnesses (*i.e.*, witnesses who have given information upon which revocation may be based) at a postponed probable cause hearing. Such adverse witnesses may be required to attend either a postponed probable cause hearing, or a combined postponed probable cause and local revocation hearing, provided the parolee meets the requirements of § 2.102(a) for a local revocation hearing. The parolee shall also be given notice of the time and place of any postponed probable cause hearing.

(c) *Review of the charges.* At the beginning of the probable cause hearing, the examiner shall ascertain that the notice required by § 2.99 (b) has been given to the parolee. The examiner shall then review the violation charges with the parolee and shall apprise the parolee of the evidence that has been submitted in support of the charges. The examiner shall ascertain whether the parolee admits or denies each charge listed on the warrant application (or other notice of charges), and shall offer the parolee an opportunity to rebut or explain the allegations contained in the evidence giving rise to each charge. The examiner shall also receive the statements of any witnesses and documentary evidence that may be presented by the parolee. At a postponed probable cause hearing, the examiner shall also permit the parolee to confront and cross-examine any adverse witnesses in attendance, unless good cause is found for not allowing confrontation. Whenever a probable cause hearing is postponed to secure the appearance of adverse witnesses, the Commission will ordinarily order a combined probable cause and local revocation hearing as provided in paragraph (i) of this section.

(d) *Probable cause determination.* At the conclusion of the probable cause hearing, the examiner shall determine whether probable cause exists to believe that the parolee has violated parole as charged, and shall so inform the parolee. The examiner shall then take either of the following actions:

(1) If the examiner determines that no probable cause exists for any violation charge, the examiner shall order that the parolee be released from the custody of the warrant and either reinstated to parole, or discharged from supervision if the parolee's sentence has expired.

(2) If the hearing examiner determines that probable cause exists on any violation charge, and the parolee has requested (and is eligible for) a local revocation hearing in the District of Columbia as provided by § 2.102 (a), the examiner shall schedule a local revocation hearing for a date that is within 65 days of the parolee's arrest. After the probable cause hearing, the parolee (or the parolee's attorney) may submit a written request for a postponement. Such postponements will normally be granted if the request is received no later than fifteen days before the date of the revocation hearing. A request for a postponement that is received by the Commission less than fifteen days before the scheduled date of the revocation hearing will be granted only for a compelling reason. The parolee (or the parolee's attorney) may also request, in writing, a hearing date that is earlier than the date scheduled by the examiner, and the Commission will accommodate such request if practicable.

(e) *Institutional revocation hearing.* If the parolee is not eligible for a local revocation hearing as provided by

§ 2.102 (a), or has requested to be transferred to an institution for his revocation hearing, the Commission will request the Bureau of Prisons to designate the parolee to an appropriate institution, and an institutional revocation hearing shall be scheduled for a date that is within ninety days of the parolee's retaking.

(f) *Digest of the probable cause hearing.* At the conclusion of the probable cause hearing, the examiner shall prepare a digest summarizing the evidence presented at the hearing, the responses of the parolee, and the examiner's findings as to probable cause.

(g) *Release notwithstanding probable cause.* Notwithstanding a finding of probable cause, the Commission may order the parolee's reinstatement to supervision or release pending further proceedings, if it determines that:

(1) Continuation of revocation proceedings is not warranted despite the finding of probable cause; or

(2) Incarceration pending further revocation proceedings is not warranted by the frequency or seriousness of the alleged violation(s), and the parolee is neither likely to fail to appear for further proceedings, nor is a danger to himself or others.

(h) *Conviction as probable cause.* Conviction of any crime committed subsequent to release by a parolee shall constitute probable cause for the purposes of this section, and no probable cause hearing shall be conducted unless a hearing is needed to consider additional violation charges that may be determinative of the Commission's decision whether to revoke parole.

(i) *Combined probable cause and local revocation hearing.* A postponed probable cause hearing may be conducted as a combined probable cause and local revocation hearing, provided such hearing is conducted within 65 days of the parolee's arrest and the parolee has been notified that the postponed probable cause hearing will constitute his final revocation hearing. The Commission's policy is to conduct a combined probable cause and local revocation hearing whenever adverse witnesses are required to appear and give testimony with respect to contested charges.

(j) *Late received charges.* If the Commission is notified of an additional charge after probable cause has been found to proceed with a revocation hearing, the Commission may:

(1) Remand the case for a supplemental probable cause hearing if the new charge may be contested by the parolee and possibly result in the appearance of witness(es) at the revocation hearing;

(2) Notify the parolee that the additional charge will be considered at the revocation hearing without conducting a supplemental probable cause hearing; or

(3) Determine that the new charge shall not be considered at the revocation hearing.

[67 FR 2569, Jan. 18, 2002, as amended at 68 FR 3390, Jan. 24, 2003]

§ 2.102 Place of revocation hearing.

(a) If the parolee requests a local revocation hearing, he shall be given a revocation hearing reasonably near the place of the alleged violation(s) or arrest, with the opportunity to contest the charges against him, if the following conditions are met:

(1) The parolee has not been convicted of a crime committed while under supervision; and

(2) The parolee denies all charges against him.

(b) The parolee shall also be given a local revocation hearing if he admits (or has been convicted of) one or more charged violations, but denies at least one unadjudicated charge that may be determinative of the Commission's decision regarding revocation and/or reparole, and requests the presence of one or more adverse witnesses regarding that contested charge. If the appearance of such witness at the hearing is precluded by the Commission for good cause, a local revocation hearing shall not be ordered.

(c) If there are two or more contested charges, a local revocation hearing may be conducted near the place of the violation chiefly relied upon by the Commission as a basis for the issuance of the warrant or summons.

(d)(1) A parolee shall be given an institutional revocation hearing upon the parolee's return or recommitment to an institution if the parolee:

(i) Voluntarily waives the right to a local revocation hearing; or

(ii) Admits (or has been convicted of) one or more charged violations without contesting any unadjudicated charge that may be determinative of the Commission's decision regarding revocation and/or reparole.

(2) An institutional revocation hearing may also be conducted in the District of Columbia jail or prison facility in which the parolee is being held. On his own motion, a Commissioner may designate any case described in paragraph (d)(1) of this section for a local revocation hearing. The difference in procedures between a ''local revocation hearing'' and an ''institutional revocation hearing'' is set forth in § 2.103(b).

(e) A parolee retaken on a warrant issued by the Commission shall be retained in custody until final action relative to revocation of his parole, unless otherwise ordered by the Commission under § 2.101(e)(3). A parolee who has been given a revocation hearing pursuant to the issuance of a summons shall remain on supervision pending the decision of the Commission, unless the Commission has provided otherwise.

(f) A local revocation hearing shall be held not later than sixty-five days from the retaking of the parolee on the parole violation warrant. An institutional revocation hearing shall be held within ninety days of the retaking of the parolee on the parole violation warrant. If the parolee requests and receives any postponement, or consents to any postponement, or by his actions otherwise precludes the prompt completion of revocation proceedings in his case, the above-stated time limits shall be correspondingly extended.

[65 FR 45888, July 26, 2000, as amended at 67 FR 2570, Jan. 18, 2002; 68 FR 41531, July 14, 2003]

§ 2.103 Revocation hearing procedure.

(a) The purpose of the revocation hearing shall be to determine whether the parolee has violated the conditions of his release and, if so, whether his parole or mandatory release should be revoked or reinstated.

(b) At a local revocation hearing, the alleged violator may present voluntary witnesses and documentary evidence in his behalf. The alleged violator may also seek the compulsory attendance of any adverse witnesses for cross-examination, and any relevant favorable witnesses who have not volunteered to attend. At an institutional revocation hearing, the alleged violator may present voluntary witnesses and documentary evidence in his behalf, but may not request the Commission to secure the attendance of any adverse or favorable witness. At any hearing, the presiding hearing officer or examiner may limit or exclude any irrelevant or repetitious statement or documentary evidence, and may prohibit the parolee from contesting matters already adjudicated against him in other forums.

(c) At a local revocation hearing, the Commission shall, on the request of the alleged violator, require the attendance of any adverse witnesses who have given statements upon which revocation may be based. The adverse witnesses who are present shall be made available for questioning and cross-examination in the presence of the alleged violator. The Commission may also require the attendance of adverse witnesses on its own motion, and may excuse any requested adverse witness from appearing at the hearing (or from appearing in the presence of the alleged violator) if it finds good cause for so doing. A finding of good cause for the non-appearance of a requested adverse witness may be based, for example, on a significant possibility of harm to the witness, the witness not being reasonably available, and/or the availability of documentary evidence that is an adequate substitute for live testimony.

(d) All evidence upon which a finding of violation may be based shall be disclosed to the alleged violator before the revocation hearing. Such evidence shall include the Community Supervision Officer's letter summarizing the parolee's adjustment to parole and requesting the warrant, all other documents describing the charged violation or violations of parole, and any additional evidence upon which the Commission intends to rely in determining whether the charged violation or violations, if sustained, would warrant revocation of parole. If the parolee is represented by an attorney, the attorney shall be provided, prior to the revocation hearing, with a copy of the parolee's presentence investigation report, if

such report is available to the Commission. If disclosure of any information would reveal the identity of a confidential informant or result in harm to any person, that information may be withheld from disclosure, in which case a summary of the withheld information shall be disclosed to the parolee prior to the revocation hearing.

(e) An alleged violator may be represented by an attorney at either a local or an institutional revocation hearing. In lieu of an attorney, an alleged violator may be represented at any revocation hearing by a person of his choice. However, the role of such non-attorney representative shall be limited to offering a statement on the alleged violator's behalf. Only licensed attorneys shall be permitted to question witnesses, make objections, and otherwise provide legal representation for parolees, except in the case of law students appearing before the Commission as part of a court-approved clinical practice program, with the consent of the alleged violator, and under the personal direction of a lawyer or law professor who is physically present at the hearing.

(f) At a local revocation hearing, the Commission shall secure the presence of the parolee's Community Supervision Officer, or a substitute Community Supervision Officer, who shall bring the parolee's supervision file, if the parolee's Community Supervision Officer is not available. At the request of the hearing examiner, such officer shall provide testimony at the hearing concerning the parolee's adjustment to parole.

(g) After the revocation hearing, the hearing examiner shall prepare a summary of the hearing that includes a description of the evidence against the parolee and the evidence submitted by the parolee in defense or mitigation of the charges, a summary of the arguments against revocation presented by the parolee, and the examiner's recommended decision. The hearing examiner's summary, together with the parolee's file (including any documentary evidence and letters submitted on behalf of the parolee), shall be given to another examiner for review. When two hearing examiners concur in a recommended disposition, that recommendation, together with the parolee's file and the hearing examiner's summary of the hearing, shall be submitted to the Commission for decision.

[65 FR 45888, July 26, 2000, as amended at 67 FR 2570, Jan. 18, 2002]

§ 2.104 Issuance of subpoena for appearance of witnesses or production of documents.

(a)(1) If any adverse witness (*i.e.*, a person who has given information upon which revocation may be based) refuses, upon request by the Commission, to appear at a probable cause hearing or local revocation hearing, a Commissioner may issue a subpoena for the appearance of such witness. Such subpoena may also be issued at the discretion of a Commissioner in the event such adverse witness is judged unlikely to appear as requested.

(2) In addition, a Commissioner may, upon a showing by the parolee that a witness whose testimony is necessary to the proper disposition of his case will not appear voluntarily at a local revocation hearing or provide an adequate written statement of his testimony, issue a subpoena for the appearance of such witness at the revocation hearing.

(3) Such subpoenas may also be issued at the discretion of a Commissioner if deemed necessary for the orderly processing of the case.

(b) A subpoena issued pursuant to paragraph (a) of this section may require the production of documents as well as, or in lieu of, a personal appearance. The subpoena shall specify the time and the place at which the person named therein is commanded to appear, and shall specify any documents required to be produced.

(c) A subpoena may be served by any Federal or District of Columbia officer authorized to serve criminal process. The subpoena may be served at any place within the judicial district in which the place specified in the subpoena is located, or any place where the witness may be found. Service of a subpoena upon a person named therein shall be made by delivering a copy thereof to such a person.

(d) If a person refuses to obey such subpoena, the Commission may petition a court of the United States for

the judicial district on which the parole proceeding is being conducted, or in which such person may be found, to require such person to appear, testify, or produce evidence. If the court issues an order requiring such person to appear before the Commission, failure to obey such an order is punishable as contempt. 18 U.S.C. 4214 (1976).

[65 FR 45888, July 26, 2000, as amended at 67 FR 2571, Jan. 18, 2002]

§ 2.105 Revocation decisions.

(a) Whenever a parolee is summoned or retaken by the Commission, and the Commission finds by a preponderance of the evidence that the parolee has violated one or more conditions of parole, the Commission may take any of the following actions:

(1) Restore the parolee to supervision, including where appropriate:

(i) Reprimand the parolee;

(ii) Modify the parolee's conditions of release; or

(iii) Refer the parolee to a residential community treatment center for all or part of the remainder of his original sentence; or

(2) Revoke parole.

(b) If parole is revoked pursuant to this section, the Commission shall also determine whether immediate reparole is warranted or whether parole should be terminated pursuant to D.C. Code 24–406(a). Termination of parole shall return the parolee to prison. If the parolee is returned to prison, the Commission shall also determine a presumptive release date pursuant to § 2.81.

(c) Decisions under this section shall be made by one Commissioner, except that a decision to override an examiner panel recommendation shall require the concurrence of two Commissioners. The final decision following a local revocation hearing shall be issued within 86 days of the retaking of the parolee on the parole violation warrant. The final decision following an institutional revocation hearing shall be issued within 21 days of the hearing, excluding weekends and holidays.

(d) Pursuant to D.C. Code 24–406(a), a parolee whose parole is revoked by the Commission shall receive no credit toward his sentence for time spent on parole, including any time the parolee may have spent in confinement on other sentences (or in a halfway house as a condition of parole) prior to the execution of the Commission's warrant.

(e) Notwithstanding paragraphs (a) through (d) of this section, prisoners committed under the Federal Youth Corrections Act shall not be subject to forfeiture of time on parole, but shall serve uninterrupted sentences from the date of conviction except as provided in § 2.10(b) and (c). This exception from D.C. Code 24–406(a) does not apply to prisoners serving sentences under the D.C. Youth Rehabilitation Act, to which D.C. Code 24–406(a) is fully applicable.

(f) In determining whether to revoke parole for non-compliance with a condition requiring payment of a fine, restitution, court costs or assessment, and/or court ordered child support or alimony payment, the Commission shall consider the parolee's employment status, earning ability, financial resources, and any other special circumstances that may have a bearing on the matter. Revocation shall not be ordered unless the parolee is found to be deliberately evading or refusing compliance.

(g) A parolee may appeal a decision made under this section to revoke parole, to grant or deny reparole, or to modify the conditions of release. The provisions of § 2.26 on the time limits for filing and deciding the appeal, the grounds for appeal, the format of the appeal, the limits regarding the submission of exhibits, and voting requirements apply to an appeal submitted under this paragraph.

[65 FR 45888, July 26, 2000, as amended at 67 FR 2571, Jan. 18, 2002; 68 FR 41531, July 14, 2003; 69 FR 68793, Nov. 26, 2004]

§ 2.106 Youth Rehabilitation Act.

(a) *Regulations governing YRA offenders and D.C. Code FYCA offenders.* Unless the judgment and commitment order provides otherwise, the provisions of this section shall apply to an offender sentenced under the Youth Rehabilitation Act of 1985 (D.C. Code 24–901 *et seq.*) (YRA) who committed his offense before 5 p.m., August 11, 2000, and a D.C. Code offender sentenced

under the former Federal Youth Corrections Act (former 18 U.S.C. 5005 *et seq.*) (FYCA). An offender sentenced under the YRA who committed his offense (or who continued to commit his offense) on or after 5 p.m., August 11, 2000, is not eligible for release on parole, but may be terminated from a term of supervised release before the expiration of the term and receive a certificate setting aside the conviction under §2.208(f). *See* D.C. Code 24–904(c) and 24–906(c).

(b) *Application of this subpart to YRA offenders.* All provisions of this subpart that apply to adult offenders also apply to YRA offenders unless a specific exception is made for YRA (or youth) offenders.

(c) *No further benefit finding.* If there is a finding that a YRA offender will derive no further benefit from treatment, such prisoner shall be considered for parole, and for any other action, exclusively under the provisions of this subpart that are applicable to adult offenders. Such a finding may be made pursuant to D.C. Code 24–905 by the Department of Corrections or by the Bureau of Prisons, and shall be promptly forwarded to the Commission. However, if the finding is appealed to the sentencing judge, the prisoner will continue to be treated under the provisions pertaining to YRA offenders until the judge makes a final decision denying the appeal.

(d)(1) *Program plans and using program achievement to set the parole date.* At a YRA prisoner's initial parole hearing, a program plan for the prisoner's treatment shall be submitted by institutional staff and reviewed by the hearing examiner. Any proposed modifications to the plan shall be discussed at the hearing, although further relevant information may be presented and considered after the hearing. The plan shall adequately account for the risk implications of the prisoner's current offense and criminal history and shall address the prisoner's need for rehabilitational training. The program plan shall also include an estimated date of completion. The criteria at §2.64(d) for successful response to treatment programs shall be considered by the Commission in determining whether the proposed program plan would effectively reduce the risk to the public welfare.

(2) The youth offender's response to treatment programs and program achievement shall be considered with other relevant factors, such as the offense and parole prognosis, in determining when the youth offender should be conditionally released under supervision. *See* §2.64(e). The guidelines at §2.80(k)–(m) on awarding superior program achievement and the subtraction of any award in determining the total guideline range shall not be used in the decision.

(e) *Parole violators.* A YRA parolee who has had his parole revoked shall be scheduled for a rehearing within six months of the revocation hearing to review the new program plan prepared by institutional staff, unless a parole effective date is granted after the revocation hearing. Such program plan shall reflect a thorough reassessment of the prisoner's rehabilitational needs in light of the prisoner's failure on parole. Decisions on reparole shall be made using the guidelines at §2.80. If a YRA parolee is sentenced to a new prison term of one year or more for a crime committed while on parole, the case shall be referred to correctional authorities for consideration of a ''no further benefit'' finding.

(f) *Unconditional discharge from supervision.* (1) A YRA parolee may be unconditionally discharged from supervision after service of one year on parole supervision if the Commission finds that supervision is no longer needed to protect the public safety. A review of the parolee's file shall be conducted after the conclusion of each year of supervision upon receipt of an annual progress report, and upon receipt of a final report to be submitted by the supervision officer six months prior to the sentence expiration date.

(2) In making a decision concerning unconditional discharge, the Commission shall consider the facts and circumstances of each case, focusing on the risk the parolee poses to the public and the benefit he may obtain from further supervision. The decision shall be made after an analysis of case-specific factors, including, but not limited to, the parolee's prior criminal history, the offense behavior that led to his

conviction, record of drug or alcohol dependence, employment history, stability of residence and family relationships, and the number and nature of any incidents while under supervision (including new arrests, alleged parole violations, and criminal investigations).

(3) An order of unconditional discharge from supervision terminates the YRA offender's sentence. Whenever a YRA offender is unconditionally discharged from supervision, the Commission shall issue a certificate setting aside the offender's conviction. If the YRA offender is not unconditionally discharged from supervision prior to the expiration of his sentence, a certificate setting aside the conviction may be issued nunc pro tunc if the Commission finds that the failure to issue the decision on time was due to administrative delay or error, or that the Supervision Officer failed to present the Commission with a progress report before the end of the supervision term, and the offender's own actions did not contribute to the absence of the final report. However, the offender must have deserved to be unconditionally discharged from supervision before the end of his supervision term for a nunc pro tunc certificate to issue.

[65 FR 45888, July 26, 2000, as amended at 67 FR 57946, Sept. 13, 2002; 68 FR 41531, July 14, 2003]

§ 2.107 Interstate Compact.

(a) Pursuant to D.C. Code 24–133(b)(2)(G), the Director of the Court Services and Offender Supervision Agency (CSOSA), or his designee, shall be the Compact Administrator with regard to the following individuals on parole supervision pursuant to the Interstate Parole and Probation Compact authorized by D.C. Code 24–451:

(1) All D.C. Code parolees who are under the supervision of agencies in jurisdictions outside the District of Columbia; and

(2) All parolees from other jurisdictions who are under the supervision of CSOSA within the District of Columbia.

(b) Transfers of supervision pursuant to the Interstate Compact, where appropriate, may be arranged by the Compact Administrator, or his designee, and carried out with the approval of the Parole Commission. A D.C. Code parolee who is under the Parole Commission's jurisdiction will ordinarily be released or transferred to the supervision of a U.S. Probation Office outside the District of Columbia.

(c) Upon receipt of a report that a D.C. Code parolee, who is under supervision pursuant to the Interstate Compact in a jurisdiction outside the District of Columbia, has violated his or her parole, the Commission may issue a warrant pursuant to the procedures of § 2.98. The warrant may be executed as provided as in § 2.99. A parolee who is arrested on such a warrant shall be considered to be a prisoner in federal custody, and may be returned to the District of Columbia or designated to a facility of the Bureau of Prisons at the request of the Commission.

(d) If a parolee from another jurisdiction, who is under the supervision of CSOSA pursuant to the Interstate Compact, is alleged to have violated his or her parole, the Compact Administrator or his designee may issue a temporary warrant to secure the arrest of the parolee pending issuance of a warrant by the original paroling agency. If so requested, the Commission will conduct a courtesy revocation hearing on behalf of the original paroling agency whenever a revocation hearing within the District of Columbia is required.

(e) The term ''D.C. Code parolee'' shall include any felony offender who is serving a period of parole or mandatory release supervision pursuant to a sentence of imprisonment imposed under the District of Columbia Code.

[65 FR 45888, July 26, 2000, as amended at 68 FR 41531, July 14, 2003]

Subpart D—District of Columbia Supervised Releasees

SOURCE: 68 FR 41700, July 15, 2003, unless otherwise noted.

§ 2.200 Authority, jurisdiction, and functions of the U.S. Parole Commission with respect to offenders serving terms of supervised release imposed by the Superior Court of the District of Columbia.

(a) The U.S. Parole Commission has jurisdiction, pursuant to D.C. Code 24–133(c)(2), over all offenders serving terms of supervised release imposed by the Superior Court of the District of Columbia under the Sentencing Reform Emergency Amendment Act of 2000.

(b) The U.S. Parole Commission shall have and exercise the same authority with respect to a term of supervised release as is vested in the United States district courts by 18 U.S.C. 3583(d) through (i), except that:

(1) The procedures followed by the Commission in exercising that authority shall be those set forth with respect to offenders on federal parole at 18 U.S.C. 4209 through 4215 (Chapter 311 of 18 United States Code); and

(2) An extension of a term of supervised release under subsection (e)(2) of 18 U.S.C. 3583 may only be ordered by the Superior Court upon motion from the Commission.

(c) Within the District of Columbia, supervision of offenders on terms of supervised release under the Commission's jurisdiction is carried out by the Community Supervision Officers of the Court Services and Offender Supervision Agency (CSOSA), pursuant to D.C. Code 24–133(c)(2). Outside the District of Columbia, supervision is carried out by United States Probation Officers pursuant to 18 U.S.C. 3655. For the purpose of this subpart, any reference to a ''supervision officer'' shall include both a Community Supervision Officer of CSOSA and a United States Probation Officer in the case of a releasee who is under supervision outside the District of Columbia.

§ 2.201 Period of supervised release.

(a) A period of supervised release that is subject to the Commission's jurisdiction begins to run on the day the offender is released from prison and continues to the expiration of the full term imposed by the Superior Court, unless early termination is granted by the Commission.

(b) A term of supervised release shall run concurrently with any federal, state, or local term of probation, parole or supervised release for another offense, but does not run while the offender is imprisoned in connection with a conviction for a federal, state, or local crime (including a term of imprisonment resulting from a probation, parole, or supervised release revocation) unless the period of imprisonment is less than 30 days. Such interruption of the term of supervised release is required by D.C. Code 24–403.01(b)(5), and is not dependent upon the issuance of a warrant or an order of revocation by the Commission.

(c)(1) For an offender serving multiple terms of supervised release imposed by the Superior Court, the duration of the Commission's jurisdiction over the offender shall be governed by the longest term imposed.

(2) If the Commission terminates such an offender from supervision on the longest term imposed, this order shall have the effect of terminating the offender from all terms of supervised release that the offender is serving at the time of the order.

(3) If the Commission issues a warrant or summons for such an offender, or revokes supervised release for such an offender, the Commission's action shall have the effect of commencing revocation proceedings on, or revoking, all terms that the offender is serving at the time of the action. In revoking supervised release the Commission shall impose a term of imprisonment and a further term of supervised release as if the Commission were revoking a single term of supervised release. For the purpose of calculating the maximum authorized term of imprisonment at first revocation and the original maximum authorized term of supervised release, the Commission shall use the unexpired supervised release term imposed for the offense punishable by the longest maximum term of imprisonment.

(4) If such an offender is released to a further term of supervised release after serving a prison term resulting from a supervised release revocation, the Commission shall consider the offender to be serving only the single term of supervised release ordered after revocation.

§ 2.202 Prerelease procedures.

(a) At least three months, but not more than six months, prior to the release of a prisoner who has been sentenced to a term or terms of supervised release by the Superior Court, the responsible prison officials shall have the prisoner's release plan forwarded to CSOSA (or to the appropriate U.S. Probation Office) for investigation. If the supervision officer believes that any special condition of supervised release should be imposed prior to the release of the prisoner, the officer shall forward a request for such condition to the Commission. The Commission may, upon such request or of its own accord, impose any special condition in addition to the standard conditions specified in § 2.204, which shall take effect on the day the prisoner is released.

(b) Upon the release of the prisoner, the responsible prison officials shall instruct the prisoner, in writing, to report to the assigned supervision office within 72 hours, and shall inform the prisoner that failure to report on time shall constitute a violation of supervised release. If the prisoner is released to the custody of other authorities, the prisoner shall be instructed to report to the supervision office within 72 hours after his release from the physical custody of such authorities. If the prisoner is unable to report to the supervision office within 72 hours of release because of an emergency, the prisoner shall be instructed to report to the nearest U.S. Probation Office and obey the instructions given by the duty officer.

§ 2.203 Certificate of supervised release.

When an offender who has been released from prison to serve a term of supervised release reports to the supervision officer for the first time, the supervision officer shall deliver to the releasee a certificate listing the conditions of supervised release imposed by the Commission and shall explain the conditions to the releasee.

§ 2.204 Conditions of supervised release.

(a)(1) *General conditions of release and notice by certificate of release.* The conditions set forth in paragraphs (a)(3)-(6) of this section apply to every releasee and are necessary to protect the public from further crimes by the releasee and to provide adequate supervision of the releasee. The certificate of release issued to each releasee by the Commission notifies the releasee of these conditions.

(2) *Effect of refusal to sign certificate of release.* A releasee who refuses to sign the certificate of release is nonetheless bound by the conditions set forth in that certificate.

(3) *Reporting arrival.* The releasee shall go directly to the district named in the certificate, appear in person at the supervision office, and report the releasee's residence address to the supervision officer. If the releasee is unable to appear in person at that office within 72 hours of release because of an emergency, the releasee shall report to the nearest U.S. Probation Office and obey the instructions given by the duty officer. A releasee who is initially released to the physical custody of another authority shall follow the procedures described in this paragraph upon release from the custody of the other authority.

(4) *Providing information to and cooperating with the supervision officer.* (i) The releasee shall, between the first and third day of each month, make a written report to the supervision officer on a form provided for that purpose. The releasee shall also report to the supervision officer at such times and in such a manner as that officer directs and shall provide such information as the supervision officer requests. All information that a releasee provides to the supervision officer shall be complete and truthful.

(ii) The releasee shall notify the supervision officer within two days of an arrest or questioning by a law-enforcement officer, a change in place of residence, or a change in employment.

(iii) The releasee shall permit the supervision officer to visit the releasee's residence and workplace.

(iv) The releasee shall permit the supervision officer to confiscate any material that the supervision officer believes may constitute contraband and that is in plain view in the releasee's possession, including in the releasee's residence, workplace, or vehicle.

(v) The releasee shall submit to a drug or alcohol test whenever ordered to do so by the supervision officer.

(5) *Prohibited conduct.* (i) The releasee shall not violate any law and shall not associate with a person who is violating any law.

(ii) The releasee shall not possess a firearm, other dangerous weapon, or ammunition.

(iii) The releasee shall not drink alcoholic beverages to excess and shall not illegally buy, possess, use, or administer a controlled substance. The releasee shall not frequent a place where a controlled substance is illegally sold, dispensed, used, or given away.

(iv) The releasee shall not leave the geographic limits set by the certificate of release without written permission from the supervision officer.

(v) The releasee shall not associate with a person who has a criminal record without permission from the supervision officer.

(vi) The releasee shall not enter into an agreement to act as an informer or special agent for a law-enforcement agency without the prior approval of the Commission.

(6) *Additional conditions.* (i) The releasee shall make a diligent effort to work regularly, unless excused by the supervision officer, and to support any legal dependent. The releasee shall participate in an employment readiness program if so directed by the supervision officer.

(ii) The releasee shall make a diligent effort to satisfy any fine, restitution order, court costs or assessment, or court-ordered child support or alimony payment to which the releasee is subject. The releasee shall provide financial information relevant to the payment of such a financial obligation that is requested by the supervision officer. If unable to pay such a financial obligation in one sum, the releasee shall cooperate with the supervision officer to establish an installment-payment schedule.

(iii) If the term of supervision results from a conviction for a domestic violence crime, and such conviction is the releasee's first conviction for such a crime, the releasee shall, as directed by the supervision officer, attend an approved offender-rehabilitation program if such a program is readily available within a 50-mile radius of the releasee's residence.

(iv) The releasee shall comply with any applicable sex-offender reporting and registration law.

(v) The releasee shall provide a DNA sample, as directed by the supervision officer, if collection of such sample is authorized by the DNA Analysis Backlog Elimination Act of 2000.

(vi) If the releasee is supervised by the District of Columbia Court Services and Offender Supervision Agency, the releasee shall submit to the sanctions imposed by the supervision officer within the limits established by an approved schedule of graduated sanctions if the supervision officer finds that the releasee has tested positive for illegal drugs or has committed a noncriminal violation of the conditions of release. Notwithstanding the imposition of a graduated sanction, if the Commission believes the releasee is a risk to the public safety, or is not complying in good faith with the sanction imposed, the Commission may commence revocation proceedings on the alleged violation(s) upon which the graduated sanction was based.

(vii) As directed by the supervision officer, the releasee shall notify a person of a risk of harm that may be determined from a review of the releasee's criminal record or personal history and characteristics. In addition, the supervision officer is authorized to make such notifications as are permitted by the Commission's rules, and to confirm the releasee's compliance with any notification directive.

(b)(1) *Special conditions of release.* The Commission may impose a condition other than a condition set forth in paragraphs (a)(3)–(6) of this section if the Commission determines that such condition is necessary to protect the public from further crimes by the releasee and provide adequate supervision of the releasee.

(2) The following are examples of special conditions frequently imposed by the Commission—

(i) That the releasee reside in or participate in the program of a community corrections center, or both, for all or part of the period of supervision;

(ii) That the releasee participate in a drug-or alcohol-treatment program, and abstain from all use of alcohol and other intoxicants;

(iii) That, as an alternative to incarceration, the releasee remain at home during nonworking hours and have compliance with this condition monitored by telephone or electronic signaling devices; and

(iv) That the releasee permit a supervision officer to conduct a search of the releasee's person, or of any building, vehicle, or other area under the control of the releasee, at such time as that supervision officer shall decide, and to seize contraband found thereon or therein.

(3) If the Commission requires the releasee's participation in a drug-treatment program, the releasee must submit to a drug test within 15 days of release and to at least two other drug tests, as determined by the supervision officer. A decision not to impose this special condition, because available information indicates a low risk of future substance abuse by the releasee, shall constitute good cause for suspension of the drug testing requirements of 18 U.S.C. 3583(d).

(c) *Changing conditions of release.* (1) The Commission may at any time modify or add to the conditions of release if the Commission determines that such modification or addition is necessary to protect the public from further crimes by the releasee and provide adequate supervision of the releasee.

(2)(i) Except as provided in paragraph (c)(2)(ii) of this section, before the Commission orders a change of condition, the releasee shall be notified of the proposed modification or addition and, unless waived, shall have 10 days from receipt of such notification to comment on the proposed modification or addition. Following that 10-day period, the Commission shall have 21 days, exclusive of holidays, to determine whether to order such modification or addition to the conditions of release.

(ii) The 10-day notice requirement of paragraph (c)(2)(i) of this section does not apply to a change of condition that results from a revocation hearing for the releasee, a determination that the modification or addition must be ordered immediately to prevent harm to the releasee or to the public, or a request from the releasee.

(d) *Application of release conditions to absconder.* A releasee who absconds from supervision prevents the term of supervision from expiring and the running of the term is tolled during the time that the releasee is an absconder. A releasee who absconds from supervision remains bound by the conditions of release, even after the date that the term of supervision originally was scheduled to expire. The Commission may revoke the term of supervision based on a violation of a release condition committed by such a releasee before the expiration of the term of supervision, as extended by the period of absconding.

(e) *Revocation for certain violations of release conditions.* If the Commission finds after a revocation hearing that a releasee has possessed a controlled substance, refused to comply with drug testing, possessed a firearm, or tested positive for illegal controlled substances more than three times over the course of one year, the Commission shall revoke the term of supervision and impose a term of imprisonment as provided at § 2.218. If the releasee fails a drug test, the Commission shall consider appropriate alternatives to revocation.

(f) *Supervision officer guidance.* The Commission expects a releasee to understand the conditions of release according to the plain meaning of those conditions and to seek the guidance of the supervision officer before engaging in conduct that may violate a condition of release. The supervision officer may instruct a releasee to refrain from particular conduct, or take specific steps to avoid violating a condition of release, or to correct an existing violation of a condition of release. The releasee's failure to obey a directive from the supervision officer to report on compliance with such instructions may be considered as a violation of the condition described at paragraph (a)(4)(i) of this section.

(g) *Definitions.* As used in this section, the term—

(1) *Releasee* means a person who has been sentenced to a term of supervised

release by the Superior Court of the District of Columbia;

(2) *Supervision officer* means a Community Supervision Officer of the District of Columbia Court Services and Offender Supervision Agency or United States Probation Officer;

(3) *Domestic violence crime* has the meaning given that term by 18 U.S.C. 3561, except that the term ''court of the United States'' as used in that definition shall be deemed to include the District of Columbia Superior Court;

(4) *Approved offender-rehabilitation program* means a program that has been approved by the District of Columbia Court Services and Offender Supervision Agency (or the United States Probation Office) in consultation with a State Coalition Against Domestic Violence or other appropriate experts;

(5) *Certificate of release* means the certificate of supervised release delivered to the releasee under § 2.203; and

(6) *Firearm* has the meaning given by 18 U.S.C. 921.

§ 2.205 Confidentiality of supervised release records.

(a) Consistent with the Privacy Act of 1974 (5 U.S.C 552a(b)), the contents of supervised release records shall be confidential and shall not be disclosed outside the Commission and CSOSA (or the U.S. Probation Office) except as provided in paragraphs (b) and (c) of this section.

(b) Information pertaining to a releasee may be disclosed to the general public, without the consent of the releasee, as authorized by § 2.37.

(c) Information other than as described in § 2.37 may be disclosed without the consent of the releasee only pursuant to the provisions of the Privacy Act of 1974 (5 U.S.C. 552a(b)) and the implementing rules of the Commission or CSOSA, as applicable.

§ 2.206 Travel approval and transfers of supervision.

(a) A releasee's supervision officer may approve travel outside the district of supervision without approval of the Commission in the following situations:

(1) Trips not to exceed thirty days for family emergencies, vacations, and similar personal reasons;

(2) Trips, not to exceed thirty days, to investigate reasonably certain employment possibilities; and

(3) Recurring travel across a district boundary, not to exceed fifty miles outside the district, for purpose of employment, shopping, or recreation.

(b) Specific advance approval by the Commission is required for all foreign travel, employment requiring recurring travel more than fifty miles outside the district, and vacation travel outside the district of supervision exceeding thirty days. A request for such permission shall be in writing and must demonstrate a substantial need for such travel.

(c) A special condition imposed by the Commission prohibiting certain travel shall apply instead of any general rules relating to travel as set forth in paragraph (a) of this section.

(d) The district of supervision for a releasee under the supervision of CSOSA shall be the District of Columbia, except that for the purpose of travel permission under this section, the district of supervision shall include the D.C. metropolitan area as defined in the certificate of supervised release.

(e) A supervised releasee who is under the jurisdiction of the Commission, and who is released or transferred to a district outside the District of Columbia, shall be supervised by a U.S. Probation Officer pursuant to 18 U.S.C. 3655.

(f) A supervised releasee may be transferred to a new district of supervision with the permission of the supervision offices of both the transferring and receiving district, provided such transfer is not contrary to instructions from the Commission.

§ 2.207 Supervision reports to Commission.

A regular supervision report shall be submitted to the Commission by the supervision officer after the completion of 12 months of continuous community supervision and annually thereafter. The supervision officer shall submit such additional reports and information concerning both the releasee, and the enforcement of the conditions of supervised release, as the Commission may direct. All reports shall be submitted according to the format established by the Commission.

§ 2.208 Termination of a term of supervised release.

(a) The Commission, in its discretion, may terminate a term of supervised release and discharge the releasee from further supervision at any time after the expiration of one year of supervised release, if the Commission is satisfied that such action is warranted by the conduct of the releasee and the interest of justice.

(b) Two years after release on supervision, and at least annually thereafter, the Commission shall review the status of each releasee to determine the need for continued supervision. In calculating such two-year period there shall not be included any period of release prior to the most recent release, nor any period served in confinement on any other sentence. A review shall also be conducted whenever termination of supervision is specially recommended by the releasee's supervision officer. If the term of supervised release imposed by the court is two years or less, termination of supervision shall be considered only if specially recommended by the releasee's supervision officer.

(c) In determining whether to grant early termination of supervision, the Commission shall calculate for the releasee a Salient Factor Score under § 2.20, and shall apply the following early termination guidelines, provided that case-specific factors do not indicate a need for continued supervision:

(1) For a releasee classified in the very good risk category and whose current offense did not involve violence, termination of supervision may be ordered after two continuous years of incident-free supervision in the community.

(2) For a releasee classified in the very good risk category and whose current offense involved violence other than high level violence, termination of supervision may be ordered after three continuous years of incident-free supervision in the community.

(3) For a releasee classified in the very good risk category and whose current offense involved high level violence (without death of victim resulting), termination of supervision may be ordered after four continuous years of incident-free supervision in the community.

(4) For a releasee classified in other than the very good risk category, whose current offense did not involve violence, and whose prior record includes not more than one episode of felony violence, termination of supervision may be ordered after three continuous years of incident-free supervision in the community.

(5) For a releasee classified in other than the very good risk category whose current offense involved violence other than high level violence, or whose current offense did not involve violence but the releasee's prior record includes two or more episodes of felony violence, termination of supervision may be ordered after four continuous years of incident-free supervision in the community.

(6) For releasees in the following categories, release from supervision prior to five years may be ordered only upon a case-specific finding that, by reason of age, infirmity, or other compelling factors, the releasee is unlikely to be a threat to the public safety:

(i) A releasee in other than the very good risk category whose current offense involved high level violence;

(ii) A releasee whose current offense involved high level violence with death of victim resulting; and

(iii) A releasee who is a sex offender serving a term of supervised release that exceeds five years.

(7) The terms *violence* and *high level violence* are defined in § 2.80. The term incident-free supervision means that the releasee has had no reported violations, and has not been the subject of any arrest or law enforcement investigation that raises a reasonable doubt as to whether the releasee has been able to refrain from law violations while under supervision.

(d) Except in the case of a releasee covered by paragraph (c)(6) of this section, a decision to terminate supervision below the guidelines may be made if it appears that the releasee is a better risk than indicated by the salient factor score (if classified in other than the very good risk category), or is a less serious risk to the public safety

than indicated by a violent current offense or prior record. However, termination of supervision prior to the completion of two years of incident-free supervision will not be granted in any case unless case-specific factors clearly indicate that continued supervision would be counterproductive to the releasee's rehabilitation.

(e) A releasee with a pending criminal charge who is otherwise eligible for an early termination from supervision shall not be discharged from supervision until the disposition of such charge is known.

(f) Decisions on the early termination of a term of supervised release for an offender sentenced under the YRA shall be made under the provisions of this section. If the Commission terminates the term of supervised release before the expiration of the term, the youth offender's conviction is automatically set aside and the Commission shall issue a certificate setting aside the conviction. *See* D.C. Code 24–906(c), (d). The set-aside certificate shall be issued in lieu of the certificate of discharge described in §2.209.

§2.209 Order of termination.

When the Commission orders the termination of a term of supervised release, it shall issue a certificate to the releasee granting the releasee a full discharge from his term of supervised release. The termination and discharge shall take effect only upon the actual delivery of the certificate of discharge to the releasee by the supervision officer, and may be rescinded for good cause at any time prior to such delivery.

§2.210 Extension of term.

(a) At any time during service of a term of supervised release, the Commission may submit to the Superior Court a motion to extend the term of supervised release to the maximum term authorized by law, if less than the maximum authorized term was originally imposed. If the Superior Court grants the Commission's motion prior to the expiration of the term originally imposed, the extension ordered by the court shall take effect upon issuance of the order.

(b) The Commission may submit the motion for an extension of a term of supervised release if the Commission finds that the rehabilitation of the releasee or the protection of the public from further crimes by the releasee is likely to require a longer period of supervision than the court originally contemplated. The Commission's grounds for making such a finding shall be stated in the motion filed with the court.

(c) The provisions of this section shall not apply to the Commission's determination of an appropriate period of further supervised release following revocation of a term of supervised release.

§2.211 Summons to appear or warrant for retaking releasee.

(a) If a releasee is alleged to have violated the conditions of his release, and satisfactory evidence thereof is presented, a Commissioner may:

(1) Issue a summons requiring the releasee to appear for a probable cause hearing or local revocation hearing; or

(2) Issue a warrant for the apprehension and return of the releasee to custody.

(b) A summons or warrant under paragraph (a) of this section may be issued or withdrawn only by a Commissioner.

(c) Any summons or warrant under this section shall be issued as soon as practicable after the alleged violation is reported to the Commission, except when delay is deemed necessary. Issuance of a summons or warrant may be withheld until the frequency or seriousness of the violations, in the opinion of a Commissioner, requires such issuance. In the case of any releasee who is charged with a criminal offense and who is awaiting disposition of such charge, issuance of a summons or warrant may be:

(1) Temporarily withheld;

(2) Issued by the Commission and held in abeyance;

(3) Issued by the Commission and a detainer lodged with the custodial authority; or

(4) Issued for the retaking of the releasee.

(d) A summons or warrant may be issued only within the maximum term

or terms of the period of supervised release being served by the releasee, except as provided for an absconder from supervision in § 2.204(i). A summons or warrant shall be considered issued when signed and either:

(1) Placed in the mail; or

(2) Sent by electronic transmission to the appropriate law enforcement authority.

(e) The issuance of a warrant under this section operates to bar the expiration of the term of supervised release. Such warrant maintains the Commission's jurisdiction to retake the releasee either before or after the normal expiration date of the term, and for such time as may be reasonably necessary for the Commission to reach a final decision as to revocation of the term of supervised release.

(f) A summons or warrant issued pursuant to this section shall be accompanied by a warrant application (or other notice) stating:

(1) The charges against the releasee;

(2) The specific reports and other documents upon which the Commission intends to rely in determining whether a violation of supervised release has occurred and whether to revoke supervised release;

(3) Notice of the Commission's intent, if the releasee is arrested within the District of Columbia, to hold a probable cause hearing within five days of the releasee's arrest;

(4) A statement of the purpose of the probable cause hearing;

(5) The days of the week on which the Commission regularly holds its dockets of probable cause hearings at the Central Detention Facility;

(6) The releasee's procedural rights in the revocation process; and

(7) The possible actions that the Commission may take.

(g) In the case of an offender who is serving concurrent terms of parole and supervised release under the Commission's jurisdiction, the Commission may take any action permitted by this section on the basis of one or more of the terms (*e.g.,* the Commission may issue warrants on both terms, and order that the first warrant should be executed, and that the second warrant should be placed as a detainer and executed only when the offender is released from the prison term that begins with the execution of the first warrant). The Commission may conduct separate revocation hearings, or consider all parole and supervised release violation charges in one combined hearing and make dispositions on the parole and supervised release terms. If the Commission conducts separate revocation hearings and revokes parole or supervised release at the first hearing, the Commission may conduct the subsequent hearing on the same violation behavior as an institutional hearing.

§ 2.212 Execution of warrant and service of summons.

(a) Any officer of any Federal or District of Columbia correctional institution, any Federal Officer authorized to serve criminal process, or any officer or designated civilian employee of the Metropolitan Police Department of the District of Columbia, to whom a warrant is delivered, shall execute such warrant by taking the releasee and returning him to the custody of the Attorney General.

(b) Upon the arrest of the releasee, the officer executing the warrant shall deliver to the releasee a copy of the warrant application (or other notice provided by the Commission) containing the information described in § 2.211(f).

(c) If execution of the warrant is delayed pending disposition of local charges, for further investigation, or for some other purpose, the releasee is to be continued under supervision by the supervision officer until the normal expiration of the sentence, or until the warrant is executed, whichever first occurs. Monthly supervision reports are to be submitted, and the releasee must continue to abide by all the conditions of release.

(d) If any other warrant for the arrest of the releasee has been executed or is outstanding at the time the Commission's warrant is executed, the arresting officer may, within 72 hours of executing the Commission's warrant, release the arrestee to such other warrant and lodge the Commission's warrant as a detainer, voiding the execution thereof, provided such action is consistent with the instructions of the

Commission. In other cases, the arrestee may be released from an executed warrant whenever the Commission finds such action necessary to serve the ends of justice.

(e) A summons to appear at a probable cause hearing or revocation hearing shall be served upon the releasee in person by delivering to the releasee a copy of the summons and the application therefor. Service shall be made by any Federal or District of Columbia officer authorized to serve criminal process and certification of such service shall be returned to the Commission.

(f) Official notification of the issuance of a Commission warrant shall authorize any law enforcement officer within the United States to hold the releasee in custody until the warrant can be executed in accordance with paragraph (a) of this section.

§2.213 Warrant placed as detainer and dispositional review.

(a) When a releasee is a prisoner in the custody of other law enforcement authorities, or is serving a new sentence of imprisonment imposed for a crime (or for a violation of some other form of community supervision) committed while on supervised release, a violation warrant may be lodged against him as a detainer.

(b) The Commission shall review the detainer upon the request of the prisoner pursuant to the procedure set forth in §2.47(a)(2). Following such review, the Commission may:

(1) Withdraw the detainer and order reinstatement of the prisoner to supervision upon release from custody;

(2) Order a dispositional revocation hearing to be conducted at the institution in which the prisoner is confined; or

(3) Let the detainer stand until the new sentence is completed. Following the execution of the Commission's warrant, and the transfer of the prisoner to an appropriate federal facility, an institutional revocation hearing shall be conducted.

(c) Dispositional revocation hearings pursuant to this section shall be conducted in accordance with the provisions at §2.216 governing institutional revocation hearings. A hearing conducted at a state or local facility may be conducted either by a hearing examiner or by any federal, state, or local official designated by a Commissioner. Following a revocation hearing conducted pursuant to this section, the Commission may take any action authorized by §§2.218 and 2.219.

(d) The date the violation term commences is the date the Commission's warrant is executed. A releasee's violation term (*i.e.*, the term of imprisonment and/or further term of supervised release that the Commission may require the releasee to serve after revocation) shall start to run only upon the offender's release from the confinement portion of the intervening sentence.

(e) An offender whose supervised release is revoked shall be given credit for all time in confinement resulting from any new offense or violation that is considered by the Commission as a basis for revocation, but solely for the purpose of satisfying the time ranges in the reparole guidelines at §2.21. The computation of the offender's sentence, and the forfeiture of time on supervised release, are not affected by such guideline credit.

§2.214 Probable cause hearing and determination.

(a) *Hearing*. A supervised releasee who is retaken and held in custody in the District of Columbia on a warrant issued by the Commission, and who has not been convicted of a new crime, shall be given a probable cause hearing by an examiner of the Commission no later than five days from the date of such retaking. A releasee who is retaken and held in custody outside the District of Columbia, but within the Washington D.C. metropolitan area, and who has not been convicted of a new crime, shall be given a probable cause hearing by an examiner of the Commission within five days of the releasee's arrival at a facility where probable cause hearings are conducted. The purpose of a probable cause hearing is to determine whether there is probable cause to believe that the releasee has violated the conditions of supervised release as charged, and if so, whether a local or institutional revocation hearing should be conducted. If the examiner finds probable cause, the

examiner shall schedule a final revocation hearing to be held within 65 days of the releasee's arrest.

(b) *Notice and opportunity to postpone hearing.* Prior to the commencement of each docket of probable cause hearings in the District of Columbia, a list of the releasees who are scheduled for probable cause hearings, together with a copy of the warrant application for each releasee, shall be sent to the D.C. Public Defender Service. At or before the probable cause hearing, the releasee (or the releasee's attorney) may submit a written request that the hearing be postponed for any period up to thirty days, and the Commission shall ordinarily grant such requests. Prior to the commencement of the probable cause hearing, the examiner shall advise the releasee that the releasee may accept representation by the attorney from the D.C. Public Defender Service who is assigned to that docket, waive the assistance of an attorney at the probable cause hearing, or have the probable cause hearing postponed in order to obtain another attorney and/or witnesses on his behalf. In addition, the releasee may request the Commission to require the attendance of adverse witnesses (*i.e.*, witnesses who have given information upon which revocation may be based) at a postponed probable cause hearing. Such adverse witnesses may be required to attend either a postponed probable cause hearing, or a combined postponed probable cause and local revocation hearing, provided the releasee meets the requirements of § 2.215(a) for a local revocation hearing. The releasee shall also be given notice of the time and place of any postponed probable cause hearing.

(c) *Review of the charges.* At the beginning of the probable cause hearing, the examiner shall ascertain that the notice required by § 2.212(b) has been given to the releasee. The examiner shall then review the violation charges with the releasee and shall apprise the releasee of the evidence that has been submitted in support of the charges. The examiner shall ascertain whether the releasee admits or denies each charge listed on the warrant application (or other notice of charges), and shall offer the releasee an opportunity to rebut or explain the allegations contained in the evidence giving rise to each charge. The examiner shall also receive the statements of any witnesses and documentary evidence that may be presented by the releasee. At a postponed probable cause hearing, the examiner shall also permit the releasee to confront and cross-examine any adverse witnesses in attendance, unless good cause is found for not allowing confrontation. Whenever a probable cause hearing is postponed to secure the appearance of adverse witnesses (or counsel in the case of a probable cause hearing conducted outside the District of Columbia), the Commission will ordinarily order a combined probable cause and local revocation hearing as provided in paragraph (i) of this section.

(d) *Probable cause determination.* At the conclusion of the probable cause hearing, the examiner shall determine whether probable cause exists to believe that the releasee has violated the conditions of release as charged, and shall so inform the releasee. The examiner shall then take either of the following actions:

(1) If the examiner determines that no probable cause exists for any violation charge, the examiner shall order that the releasee be released from the custody of the warrant and either reinstated to supervision, or discharged from supervision if the term of supervised release has expired.

(2) If the hearing examiner determines that probable cause exists on any violation charge, and the releasee has requested (and is eligible for) a local revocation hearing in the District of Columbia as provided by § 2.215(a), the examiner shall schedule a local revocation hearing for a date that is within 65 days of the releasee's arrest. After the probable cause hearing, the releasee (or the releasee's attorney) may submit a written request for a postponement. Such postponements will normally be granted if the request is received no later than fifteen days before the date of the revocation hearing. A request for a postponement that is received by the Commission less than fifteen days before the scheduled date of the revocation hearing will be granted only for a compelling reason.

The releasee (or the releasee's attorney) may also request, in writing, a hearing date that is earlier than the date scheduled by the examiner, and the Commission will accommodate such request if practicable.

(e) *Institutional revocation hearing.* If the releasee is not eligible for a local revocation hearing as provided by §2.215(a), or has requested to be transferred to an institution for his revocation hearing, the Commission will request the Bureau of Prisons to designate the releasee to an appropriate institution, and an institutional revocation hearing shall be scheduled for a date that is within 90 days of the releasee's retaking.

(f) *Digest of the probable cause hearing.* At the conclusion of the probable cause hearing, the examiner shall prepare a digest summarizing the evidence presented at the hearing, the responses of the releasee, and the examiner's findings as to probable cause.

(g) *Release notwithstanding probable cause.* Notwithstanding a finding of probable cause, the Commission may order the releasee's reinstatement to supervision or release pending further proceedings, if it determines that:

(1) Continuation of revocation proceedings is not warranted despite the finding of probable cause; or

(2) Incarceration pending further revocation proceedings is not warranted by the frequency or seriousness of the alleged violation(s), and the releasee is neither likely to fail to appear for further proceedings, nor is a danger to himself or others.

(h) *Conviction as probable cause.* Conviction of any crime committed subsequent to the commencement of a term of supervised release shall constitute probable cause for the purposes of this section, and no probable cause hearing shall be conducted unless a hearing is needed to consider additional violation charges that may be determinative of the Commission's decision whether to revoke supervised release.

(i) *Combined probable cause and local revocation hearing.* A postponed probable cause hearing may be conducted as a combined probable cause and local revocation hearing, provided such hearing is conducted within 65 days of the releasee's arrest and the releasee has been notified that the postponed probable cause hearing will constitute the final revocation hearing. The Commission's policy is to conduct a combined probable cause and local revocation hearing whenever adverse witnesses are required to appear and give testimony with respect to contested charges.

(j) *Late received charges.* If the Commission is notified of an additional charge after probable cause has been found to proceed with a revocation hearing, the Commission may:

(1) Remand the case for a supplemental probable cause hearing to determine if the new charge is contested by the releasee and if witnesses must be presented at the revocation hearing;

(2) Notify the releasee that the additional charge will be considered at the revocation hearing without conducting a supplemental probable cause hearing; or

(3) Determine that the new charge shall not be considered at the revocation hearing.

§2.215 Place of revocation hearing.

(a) If the releasee requests a local revocation hearing, the releasee shall be given a revocation hearing reasonably near the place of the alleged violation(s) or arrest, with the opportunity to contest the violation charges, if the following conditions are met:

(1) The releasee has not been convicted of a crime committed while under supervision; and

(2) The releasee denies all violation charges.

(b) The releasee shall also be given a local revocation hearing if the releasee admits (or has been convicted of) one or more charged violations, but denies at least one unadjudicated charge that may be determinative of the Commission's decision regarding revocation or the length of any new term of imprisonment, and the releasee requests the presence of one or more adverse witnesses regarding that contested charge. If the appearance of such witnesses at the hearing is precluded by the Commission for good cause, a local revocation hearing shall not be ordered.

(c) If there are two or more contested charges, a local revocation hearing may be conducted near the place of the violation chiefly relied upon by the

Commission as a basis for the issuance of the warrant or summons.

(d)(1) A releasee shall be given an institutional revocation hearing upon the releasee's return or recommitment to an institution if the releasee:

(i) Voluntarily waives the right to a local revocation hearing; or

(ii) Admits (or has been convicted of) one or more charged violations without contesting any unadjudicated charge that may be determinative of the Commission's decision regarding revocation and/or imposition of a new term of imprisonment.

(2) An institutional revocation hearing may also be conducted in the District of Columbia jail or prison facility in which the releasee is being held. On his own motion, a Commissioner may designate any case described in paragraph (d)(1) of this section for a local revocation hearing. The difference in procedures between a ''local revocation hearing'' and an ''institutional revocation hearing'' is set forth in § 2.216(b).

(e) Unless the Commission orders release notwithstanding a probable cause finding under § 2.214(g), a releasee who is retaken on a warrant issued by the Commission shall remain in custody until a decision is made on the revocation of the term of supervised release. A releasee who has been given a revocation hearing pursuant to the issuance of a summons shall remain on supervision pending the decision of the Commission, unless the Commission has ordered otherwise.

(f) A local revocation hearing shall be held not later than 65 days from the retaking of the releasee on a supervised release violation warrant. An institutional revocation hearing shall be held within 90 days of the retaking of the releasee on a supervised release violation warrant. If the releasee requests and receives any postponement, or consents to any postponement, or by his actions otherwise precludes the prompt completion of revocation proceedings in his case, the above-stated time limits shall be correspondingly extended.

(g) A local revocation hearing may be conducted by a hearing examiner or by any federal, state, or local official who is designated by a Commissioner to be the presiding hearing officer. An institutional revocation hearing may be conducted by a hearing examiner.

§ 2.216 Revocation hearing procedure.

(a) The purpose of the revocation hearing shall be to determine whether the releasee has violated the conditions of the term of supervised release, and, if so, whether the term should be revoked or the releasee restored to supervised release.

(b) At a local revocation hearing, the alleged violator may present voluntary witnesses and documentary evidence. The alleged violator may also request the Commission to compel the attendance of any adverse witnesses for cross-examination, and any other relevant witnesses who have not volunteered to attend. At an institutional revocation hearing, the alleged violator may present voluntary witnesses and documentary evidence, but may not request the Commission to secure the attendance of any adverse or favorable witness. At any hearing, the presiding hearing officer may limit or exclude any irrelevant or repetitious statement or documentary evidence, and may prohibit the releasee from contesting matters already adjudicated against him in other forums.

(c) At a local revocation hearing, the Commission shall, on the request of the alleged violator, require the attendance of any adverse witnesses who have given statements upon which revocation may be based, subject to a finding of good cause as described in paragraph (d) of this section. The adverse witnesses who are present shall be made available for questioning and cross-examination in the presence of the alleged violator. The Commission may also require the attendance of adverse witnesses on its own motion.

(d) The Commission may excuse any requested adverse witness from appearing at the hearing (or from appearing in the presence of the alleged violator) if the Commission finds good cause for so doing. A finding of good cause for the non-appearance of a requested adverse witness may be based, for example, on a significant possibility of harm to the witness, or the witness not being reasonably available when the Commission has documentary evidence that

is an adequate substitute for live testimony.

(e) All evidence upon which a finding of violation may be based shall be disclosed to the alleged violator before the revocation hearing. Such evidence shall include the community supervision officer's letter summarizing the releasee's adjustment to supervision and requesting the warrant, all other documents describing the charged violation or violations, and any additional evidence upon which the Commission intends to rely in determining whether the charged violation or violations, if sustained, would warrant revocation of supervised release. If the releasee is represented by an attorney, the attorney shall be provided, prior to the revocation hearing, with a copy of the releasee's presentence investigation report, if such report is available to the Commission. If disclosure of any information would reveal the identity of a confidential informant or result in harm to any person, that information may be withheld from disclosure, in which case a summary of the withheld information shall be disclosed to the releasee prior to the revocation hearing.

(f) An alleged violator may be represented by an attorney at either a local or an institutional revocation hearing. In lieu of an attorney, an alleged violator may be represented at any revocation hearing by a person of his choice. However, the role of such non-attorney representative shall be limited to offering a statement on the alleged violator's behalf. Only licensed attorneys shall be permitted to question witnesses, make objections, and otherwise provide legal representation for supervised releasees, except in the case of law students appearing before the Commission as part of a court-approved clinical practice program. Such law students must be under the personal direction of a lawyer or law professor who is physically present at the hearing, and the examiner shall ascertain that the releasee consents to the procedure.

(g) At a local revocation hearing, the Commission shall secure the presence of the releasee's community supervision officer, or a substitute community supervision officer who shall bring the releasee's supervision file if the releasee's community supervision officer is not available. At the request of the hearing examiner, such officer shall provide testimony at the hearing concerning the releasee's adjustment to supervision.

(h) After the revocation hearing, the hearing examiner shall prepare a summary of the hearing that includes a description of the evidence against the releasee and the evidence submitted by the releasee in defense or mitigation of the charges, a summary of the arguments against revocation presented by the releasee, and the examiner's recommended decision. The hearing examiner's summary, together with the releasee's file (including any documentary evidence and letters submitted on behalf of the releasee), shall be given to another examiner for review. When two hearing examiners concur in a recommended disposition, that recommendation, together with the releasee's file and the hearing examiner's summary of the hearing, shall be submitted to the Commission for decision.

§2.217 Issuance of subpoena for appearance of witnesses or production of documents.

(a)(1) If any adverse witness (*i.e.*, a person who has given information upon which revocation may be based) refuses, upon request by the Commission, to appear at a probable cause hearing or local revocation hearing, a Commissioner may issue a subpoena for the appearance of such witness.

(2) In addition, a Commissioner may, upon a showing by the releasee that a witness whose testimony is necessary to the proper disposition of his case will not appear voluntarily at a local revocation hearing or provide an adequate written statement of his testimony, issue a subpoena for the appearance of such witness at the revocation hearing.

(3) A subpoena may also be issued at the discretion of a Commissioner if an adverse witness is judged unlikely to appear as requested, or if the subpoena is deemed necessary for the orderly processing of the case.

(b) A subpoena may require the production of documents as well as, or in

lieu of, a personal appearance. The subpoena shall specify the time and the place at which the person named therein is commanded to appear, and shall specify any documents required to be produced.

(c) A subpoena may be served by any Federal or District of Columbia officer authorized to serve criminal process. The subpoena may be served at any place within the judicial district in which the place specified in the subpoena is located, or any place where the witness may be found. Service of a subpoena upon a person named therein shall be made by delivering a copy of the subpoena to such a person.

(d) If a person refuses to obey such subpoena, the Commission may petition a court of the United States for the judicial district in which the revocation proceeding is being conducted, or in which such person may be found, to require such person to appear, testify, or produce evidence. If the court issues an order requiring such person to appear before the Commission, failure to obey such an order is punishable as contempt, as provided in 18 U.S.C. 4214(a)(2).

§ 2.218 Revocation decisions.

(a) Whenever a releasee is summoned or retaken by the Commission, and the Commission finds by a preponderance of the evidence that the releasee has violated one or more conditions of supervised release, the Commission may take any of the following actions:

(1) Restore the releasee to supervision, and where appropriate:

(i) Reprimand the releasee;

(ii) Modify the releasee's conditions of release;

(iii) Refer the releasee to a residential community corrections center for all or part of the remainder of the term of supervised release; or

(2) Revoke the term of supervised release.

(b) If supervised release is revoked, the Commission shall determine whether the releasee shall be returned to prison to serve a new term of imprisonment, and the length of that term, or whether a new term of imprisonment shall be imposed but limited to time served. If the Commission imposes a new term of imprisonment that is less than the applicable maximum term of imprisonment authorized by law, the Commission shall also determine whether to impose a further term of supervised release to commence after the new term of imprisonment has been served. If the new term of imprisonment is limited to time served, any further term of supervised release shall commence upon the issuance of the Commission's order. Notwithstanding the above, if a releasee is serving another term of imprisonment of 30 days or more in connection with a conviction for a federal, state, or local crime (including a term of imprisonment resulting from a probation, parole, or supervised release revocation), a further term of supervised release imposed by the Commission under this paragraph shall not commence until that term of imprisonment has been served.

(c) A releasee whose term of supervised release is revoked by the Commission shall receive no credit for time spent on supervised release, including any time spent in confinement on other sentences (or in a halfway house as a condition of supervised release) prior to the execution of the Commission's warrant.

(d) The Commission's decision regarding the imposition of a term of imprisonment following revocation of supervised release, and any further term of supervised release, shall be made pursuant to the limitations set forth in § 2.219. Within those limitations, the appropriate length of any term of imprisonment shall be determined by reference to the guidelines at § 2.21. If the term of imprisonment authorized under § 2.219 is less than the minimum of the appropriate guideline range determined under § 2.21, the term authorized under § 2.219 shall be the guideline range.

(e) Whenever the Commission imposes a term of imprisonment upon revocation of supervised release that is less than the authorized maximum term of imprisonment, it shall be the Commission's general policy to impose a further term of supervised release that is the maximum term of supervised release permitted by § 2.219. If the

Commission imposes a new term of imprisonment that is equal to the maximum term of imprisonment authorized by law (or in the case of a subsequent revocation, that uses up the remainder of the maximum term of imprisonment authorized by law), the Commission may not impose a further term of supervised release.

(f) Where deemed appropriate, the Commission may depart from the guidelines at § 2.21 (with respect to the imposition of a new term of imprisonment) in order to permit the imposition of a further term of supervised release.

(g) Decisions under this section shall be made upon the vote of one Commissioner, except that a decision to override an examiner panel recommendation shall require the concurrence of two Commissioners. The final decision following a local revocation hearing shall be issued within 86 days of the retaking of the releasee on a supervised release violation warrant. The final decision following an institutional revocation hearing shall be issued within 21 days of the hearing, excluding weekends and holidays.

§ 2.219 Maximum terms of imprisonment and supervised release.

(a) *Imprisonment; first revocation.* When a term of supervised release is revoked, the maximum authorized term of imprisonment that the Commission may require the offender to serve, in accordance with D.C. Code 24–403.01(b)(7), is determined by reference to the maximum authorized term of imprisonment for the offense of conviction. The maximum authorized term of imprisonment at the first revocation shall be:

(1) Five years, if the maximum term of imprisonment authorized for the offense is life, or if the offense is statutorily designated as a Class A felony;

(2) Three years, if the maximum term of imprisonment authorized for the offense is 25 years or more, but less than life, and the offense is not statutorily designated as a Class A felony;

(3) Two years, if the maximum term of imprisonment authorized for the offense is 5 years or more, but less than 25 years; or

(4) One year, if the maximum term of imprisonment authorized for the offense is less than 5 years.

(b) *Further term of supervised release; first revocation.* (1) When a term of supervised release is revoked, and the Commission imposes less than the maximum term of imprisonment permitted by paragraph (a) of this section, the Commission may also impose a further term of supervised release after imprisonment. A term of imprisonment is ''less than the maximum authorized term of imprisonment'' if the term is one day or more shorter than the maximum authorized term of imprisonment.

(2) The maximum authorized length of such further term of supervised release shall be the original maximum term of supervised release that the sentencing court was authorized to impose for the offense of conviction, less the term of imprisonment imposed by the Commission upon revocation of supervised release. The original maximum authorized term of supervised release is as follows:

(i) Five years if the maximum term of imprisonment authorized for the offense is 25 years or more;

(ii) Three years if the maximum term of imprisonment authorized for the offense is more than one year but less than 25 years; and

(iii) Life if the person is required to register for life, and 10 years in any other case, if the offender has been sentenced for an offense for which registration is required by the Sex Offender Registration Act of 1999.

(3) For example, if the maximum authorized term of imprisonment at the first revocation is three years and the original maximum authorized term of supervised release is five years, the Commission may impose a three-year term of imprisonment with no supervised release to follow, or any term of imprisonment of less than three years with a further term of supervised release of five years minus the term of imprisonment actually imposed (such as a one-year term of imprisonment followed by a four-year term of supervised release, or a two-year term of imprisonment followed by a three-year term of supervised release).

(c) *Reference table.* The following table may be used in most cases as a reference to determine both the maximum authorized term of imprisonment at the first revocation and the original maximum authorized term of supervised release:

D.C. Code reference for conviction offense (former code reference in brackets)	Offense description	Original maximum authorized term of supervised release	Maximum authorized term of imprisonment at the first revocation
Title 22			
22–301 [22–401]	Arson	3 years	2 years.
22–302 [22–402]	Arson: own property	3 years	2 years.
22–303 [22–403]	Destruction of property over $200	3 years	2 years.
22–401 [22–501]	Assault: with intent to kill/rob/poison, to commit sex abuse (1st or 2nd degree) or child sex abuse.	3 years (10 years if SOR).	2 years.
22–401, 4502 [22–501, 3202].	Assault: with intent to kill etc. while armed*	5 years (10 years if SOR).	5 years.
22–402 [22–502]	Assault: with a dangerous weapon	3 years	2 years.
22–403 [22–503]	Assault: with intent to commit an offense other than those in § 22–401.	3 years	2 years.
22–404(d) [22–504]	Stalking—2nd+ offense	3 years	1 year.
22–404.01, 4502 [22–504.1, 3202].	Assault; aggravated while armed*	5 years	5 years.
22–404.01(b) [22–504.1].	Assault: aggravated	3 years	2 years.
22–404.01(c) [22–504.1].	Assault: attempted aggravated	3 years	2 years.
22–405(a) [22–505]	Assault: on a police officer	3 years	2 years.
22–405(b) [22–505]	Assault: on a police officer while armed	3 years	2 years.
22–406 [22–506]	Mayhem/malicious disfigurement	3 years	2 years.
22–406, 4502 [22–506, 3202].	Mayhem/malicious disfigurement armed*	5 years	5 years.
22–501 [22–601]	Bigamy	3 years	2 years.
22–601 [22–3427]	Breaking and entering machines	3 years	1 year.
22–704(a)	Corrupt influence	3 years	2 years.
22–712(c)	Bribery: public servant	3 years	2 years.
22–713(c)	Bribery: witness	3 years	2 years.
22–722(b)	Obstructing justice*	5 years	5 years.
22–723(b)	Evidence tampering	3 years	1 year.
22–801(a) [22–1801]	Burglary 1st degree	5 years	3 years
22–801(b) [22–1801]	Burglary 2nd degree	3 years	2 years.
22–801, 4502 [22–1801, 3202].	Burglary: armed*	5 years	5 years
22–902(b)(2) [22–752].	Counterfeiting (see statute for offense circumstances).	3 years	1 year.
22–902(b)(3) [22–752].	Counterfeiting (see statute for offense circumstances).	3 years	2 years.
22–1101(a), (c)(1) [22–901].	Cruelty to children 1st degree	3 years	2 years.
22–1101(b), (c)(2) [22–901].	Cruelty to children 2nd degree	3 years	2 years.
22–1322(d) [22–1122].	Inciting riot (with injury)	3 years	2 years
22–1403 [22–1303]	False personation	3 years	2 years.
22–1404 [22–1304]	Impersonating a public official	3 years	1 year.
22–1510 [22–1410]	Bad checks $100 or more	3 years	1 year.
22–1701 [22–1501]	Illegal lottery	3 years	1 year.
22–1704 [22–1504]	Gaming	3 years	2 years.
22–1710, 1711 [22–1510, 1511].	Bucketing: 2nd+ offense	3 years	2 years.
22–1713(a) [22–1513].	Corrupt influence: Athletics	3 years	2 years.
22–1803 [22–103]	Attempted crime of violence	3 years	2 years.
22–1804 [22–104]	Second conviction		
	One prior conviction		
	If the underlying offense is punishable by life imprisonment.	5 years	5 years.
	If the underlying offense is punishable by 16⅔ years or more.	5 years	3 years.
	If the underlying offense is punishable by 3⅓ years or more but less than 16⅔ years.	3 years	2 years.
	If underlying offense is punishable by less than 3⅓ years.	3 years	1 years.
	Two or more prior convictions		

D.C. Code reference for conviction offense (former code reference in brackets)	Offense description	Original maximum authorized term of supervised release	Maximum authorized term of imprisonment at the first revocation
	If the underlying offense is punishable by life imprisonment.	5 years	5 years.
	If the underlying offense is punishable by 8⅓ years or more.	5 years	3 years.
	If the underlying offense is punishable by 1⅔ years or more but less than 8⅓ years.	3 years	2 years.
	If underlying offense is punishable by less than 1⅔ years.	3 years	1 year.
22–1804a(a)(1) [22–104a].	Three strikes for felonies*	5 years	5 years.
22–1804a(a)(2) [22–104a].	Three strikes for violent felonies*	5 years	5 years.
22–1805 [22–105]	Aiding or abetting	same as for the offense aided or abetted.	same as for the offense aided or abetted
22–1805a(a) [22–105a].	Conspiracy	3 years	2 years.
	If underlying offense is punishable by less than 5 years.	3 years	1 year.
22–1806 [22–106]	Accessory after the fact		
	If the underlying offense is punishable by 10 years or more.	3 years	2 years.
	If the underlying offense is punishable by more than 2 years but less than 10 years.	3 years	1 year.
22–1807 [22–107]	Offenses not covered by D.C. Code	3 years	2 years.
22–1810 [22–2307]	Threats (felony)	3 years	2 years.
22–1901	Incest	3 years (10 years if SOR).	2 years.
22–2001 [22–2101]	Kidnapping*	5 years	5 years.
22–2201, 4502 [22–2101, 3202].	Kidnapping: armed*	5 years	5 years.
22–2101, 2104 [22–2401, 2404].	Murder 1st degree*	5 years	5 years.
22–2101, 2104, 4502 [22–2401, 2404, 3202].	Murder 1st degree while armed*	5 years	5 years.
22–2102, 2104 [22–2402, 2404].	Murder 1st degree: obstruction of railway*	5 years	5 years.
22–2103, 2104 [22–2403, 2404].	Murder 2nd degree*	5 years	5 years.
22–2103, 2104, 4502 [22–2403, 2404, 3202].	Murder 2nd degree while armed*	5 years	5 years.
22–2105 [22–2405]	Manslaughter	5 years	3 years.
22–2105, 4502 [22–2405, 3202].	Manslaughter: armed*	5 years	5 years.
22–2201(e) [22–2001].	Obscenity: 2nd+ offense	3 years (10 years if SOR).	1 year.
22–2402(b) [22–2511].	Perjury	3 years	2 years.
22–2403 [22–2512]	Subornation of perjury	3 years	2 years.
22–2404(b) [22–2413].	False swearing	3 years	1 year.
22–2501 [22–3601]	Possessing implements of crime 2nd+ offense.	3 years	2 years.
22–2601(b)	Escape	3 years	2 years.
22–2603	Introducing contraband into prison	3 years	2 years.
22–2704	Child prostitution: abducting or harboring	3 years (10 years if SOR).	2 years.
22–2705 to 2712	Prostitution: arranging and related offenses	3 years (10 years if child victim and SOR).	2 years.
22–2801 [22–2901]	Robbery	3 years	2 years.
22–2801, 4502 [22–2901, 3202].	Robbery: armed*	5 years	5 years.
22–2802 [22–2902]	Robbery: attempted	3 years	1 year.
22–2802, 4502 [22–2902, 3202].	Robbery: attempted while armed*	5 years	5 years.
22–2803(a) [22–2903].	Carjacking	3 years	2 years.
22–2803(b) [22–2903].	Carjacking: armed*	5 years	5 years.
22–3002 [22–4102]	Sex abuse 1st degree*	5 years (life if SOR)	5 years.

D.C. Code reference for conviction offense (former code reference in brackets)	Offense description	Original maximum authorized term of supervised release	Maximum authorized term of imprisonment at the first revocation
22–3002, 4502 [22–4102, 3202].	Sex abuse 1st degree while armed *	5 years (life if SOR)	5 years.
22–3003 [22–4103]	Sex abuse 2nd degree	3 years (life if SOR)	2 years.
22–3003, 4502 [22–4103, 3202].	Sex abuse 2nd degree while armed *	5 years (life if SOR)	5 years.
22–3004 [22–4104]	Sex abuse 3rd degree	3 years (10 years if SOR).	2 years.
22–3005 [22–4105	Sex abuse 4th degree	3 years (10 years if SOR).	2 years.
22–3008 [22–4108]	Child sex abuse 1st degree *	5 years (life if SOR)	5 years.
22–3008, 3020 [22–4108, 4120].	Child sex abuse 1st degree with aggravating circumstances *.	5 years (life if SOR)	5 years.
22–3008, 4502 [22–4108, 3202].	Child sex abuse 1st degree while armed *	5 years (10 years if SOR).	5 years.
22–3009 [22–4109]	Child sex abuse 2nd degree	3 years (10 years if SOR).	2 years.
22–3009, 4502 [22–4109, 3202].	Child sex abuse 2nd degree while armed *	5 years (10 years if SOR).	5 years.
22–3010 [22–4110]	Enticing a child	3 years (10 years if SOR).	2 years.
22–3013 [22–4113]	Sex abuse ward 1st degree	3 years (10 years if SOR).	2 years.
22–3014 [22–4114]	Sex abuse ward 2nd degree	3 years (10 years if SOR).	2 years.
22–3015 [22–4115]	Sex abuse patient 1st degree	3 years (10 years if SOR).	2 years.
22–3016 [22–4116]	Sex abuse patient 2nd degree	3 years (10 years if SOR).	2 years.
22–3018 [22–4118]	Sex abuse: attempted 1st degree/child sex abuse 1st degree.	3 years (life if SOR)	2 years.
22–3018 [22–4118]	Sex abuse: other attempts		
	If offense attempted is punishable by 10 years or more.	3 years (life if SOR)	2 years.
	If the offense attempted is punishable by more than 2 years but less than 10 years.	3 years (life if SOR)	1 year.
22–3020 [22–4120]	Sex abuse 1st degree/child sex abuse 1st degree, with aggravating circumstances.	5 years (life if SOR)	5 years.
22–3020 [22–4120]	Sex abuse: other offenses with aggravating circumstances.		
	If the underlying offense is punishable by life imprisonment.	5 years (10 years if SOR).	5 years.
	If the underlying offense is punishable by 16⅔ years or more.	5 years (10 years if SOR).	3 years.
	If the underlying offense is punishable by 3⅓ years or more but less than 16⅔ years.	3 years (10 years if SOR).	2 years.
	If underlying offense is punishable by less than 3⅓ years.	3 years (10 years if SOR).	1 year.
22–3102, 3103 [22–2012, 2013.	Sex performance with minors	3 years (10 years if SOR).	2 years.
22–3153	Terrorism—Act of Murder 1st degree	5 years	5 years.
	Murder of law enforcement officer or public safety employee.	5 years	5 years.
	Murder 2nd degree	5 years	5 years.
	Manslaughter	5 years	5 years.
	Kidnapping	5 years	5 years.
	Assault with intent to kill	5 years	3 years.
	Mayhem/malicious disfigurement	3 years	2 years.
	Arson	3 years	2 years.
	Malicious destruction of property	3 years	2 years.
	Attempt/conspiracy to commit first degree murder, murder of law enforcement officer, second degree murder, manslaughter, kidnapping.	5 years	3 years.
	Attempt/conspiracy to commit assault with intent to kill.	3 years	2 years.
	Attempt/conspiracy to commit mayhem, malicious disfigurement, arson, malicious destruction of property.	3 years	2 years.
	Providing or soliciting material support for act of terrorism.	3 years	2 years.
22–3153, 22–4502 [22–3202].	Commiting any of the above acts of terrorism while armed *.	5 years	5 years.

D.C. Code reference for conviction offense (former code reference in brackets)	Offense description	Original maximum authorized term of supervised release	Maximum authorized term of imprisonment at the first revocation
22–3154	Manufacture/possession of weapon of mass destruction.	5 years	5 years.
	Attempt/conspiracy to possess or manufacture weapon of mass destruction.	5 years	3 years.
22–3155	Use, dissemination, or detonation of weapon of mass destruction.	5 years	5 years.
	Attempt/conspiracy to use, disseminate, or detonate weapon of mass destruction.	5 years	3 years.
22–3155, 22–4502 [22–3202].	Manufacture, possession, use or detonation of weapon of mass destruction while armed or attempts to commit such crimes while armed*.	5 years	5 years.
22–3212 [22–3812]	Theft 1st degree	3 years	2 years.
22–3214.03(d)(2) [22–3814.1].	Deceptive labeling	3 years	2 years.
22–3215(d)(1) [22–3815].	Vehicle: Unlawful use of (private)	3 years	2 years.
22–3215(d)(2) [22–3815].	Vehicle: Unlawful use of (rental)	3 years	1 year.
22–3221(a), 3222(a) [22–3821, 3822].	Fraud 1st degree $250 or more	3 years	2 years.
22–3221(b), 3222(b) [22–3821, 3822].	Fraud 2nd degree $250 or more	3 years	1 year.
22–3223(d)(1) [22–3823].	Fraud: credit card $250 or more	3 years	2 years.
22–3225.02, 3225.04(a) [22–3825.2, 3825.4].	Fraud: insurance 1st degree	3 years	2 years.
22–3225.03, 3225.04(b) [22–3825.3, 3825.4].	Fraud: insurance 2nd degree	3 years	2 years.
22–3231(d) [22–3831].	Stolen Property: trafficking in	3 years	2 years.
22–3232(c)(1) [22–3832].	Stolen property: receiving ($250 or more)	3 years	2 years.
22–3241, 3242 [22–3841, 3842].	Forgery:		
	Legal tender, public record, etc.	2 years..	
	Token, prescription	2 years.	
	Other	1 years..	
	3 years		
	3 years		
	3 years		
22–3251(b) [22–3851].	Extortion	3 years	2 years.
22–3251(b), 3252(b), 4502 [22–3851, 3852, 3202].	Extortion while armed or blackmail with threats of violence*.	5 years	5 years.
22–3252(b) [22–3852].	Blackmail	3 years	2 years.
22–3303 [22–3103]	Grave robbing	3 years	1 year.
22–3305 [22–3105]	Destruction of property by explosives	3 years	2 years.
22–3318 [22–3318]	Water pollution (malicious)	3 years	1 year.
22–3319 [22–3119]	Obstructing railways	3 years	2 years.
22–3601 [22–3901]	Senior citizen victim of robbery, attempted robbery, theft, attempted theft, extortion, and fraud.		
	If the underlying offense is punishable by life imprisonment.	5 years	5 years.
	If the underlying offense is punishable by 16⅔ years or more.	5 years	3 years.
	If the underlying offense is punishable by 3⅓ years or more but less than 16⅔ years.	3 years	2 years.
	If the underlying offense is punishable by less than 3⅓ years.	3 years	1 year.
22–3602 [22–3902]	Citizen patrol victim of various violent offenses.		
	If the underlying offense is punishable by life imprisonment.	5 years	5 years.
	If the underlying offense is punishable by 16⅔ years or more.	5 years	3 years.

D.C. Code reference for conviction offense (former code reference in brackets)	Offense description	Original maximum authorized term of supervised release	Maximum authorized term of imprisonment at the first revocation
	If the underlying offense is punishable by 3⅓ years or more but less than 16⅔ years.	3 years	2 years.
	If the underlying offense is punishable by less than 3⅓ years.	3 years	1 year.
22–3703 [22–4003]	Bias-related crime		
	If underlying offense is punishable by life imprisonment.	5 years	5 years.
	If underlying offense is punishable by 16⅔ years.	5 years	3 years.
	If underlying offense is punishable by more than or equal to 3⅓ years but less than 16⅔ years.	3 years	2 years.
	If underlying offense is punishable by less than 3⅓ years.	3 years	1 year.
22–4015 [24–2235]	Sex offender, failure to register (2nd offense)	3 years	2 years.
22–4502 [22–3202]	Violent crimes: committing or attempting to commit while armed.	5 years	5 years.
22–4502.01 [22–3202.1].	Gun-free zone violations		
	If underlying offense is a violation of 22–4504	3 years	2 years.
	If underlying offense is a violation of 22–4504(b) (possession of firearm while committing crime of violence or dangerous crime).	5 years	3 years.
22–4503 [22–3203]	Pistol: unlawful possession by a felon, etc. 2nd+ offense.	3 years	2 years.
22–4504(a)(1)–(2) [22–3204].	Pistol: carrying without a license	3 years	2 years.
22–4504(b) [22–3204].	Firearm: possession while committing crime of violence or dangerous crime.	3 years	2 years.
22–4514 [22–3214]	Prohibited weapon: possession of 2nd+ offense.	3 years	2 years.
22–4515a [22–3215a].	Molotov cocktails—1st or 2nd offense	3 years	2 years.
	3rd offense	5 years	5 years.
Title 23			
23–1327(a)(1)	Bail Reform Act	3 years	2 years.
23–1328(a)(1)	Committing a felony on release	3 years	2 years.
Title 48			
48–904.01(a)–(b) [33–541].	Drugs: distribute or possess with intent to distribute		
	If schedule I or II narcotics or abusive drugs (e.g., heroin, cocaine, PCP, methamphetamine).	5 years	3 years.
	If schedule I or II drugs other than above (e.g., marijuana/hashish), or schedule III drugs.	3 years	2 years.
	If schedule IV drugs	3 years	1 year.
48–904.01, 22–4502 [33–541, 22–3202].	Drugs: distribute or possess with intent to distribute while armed*.	5 years	5 years.
48–904.03 [33–543]	Drugs: acquiring by fraud	3 years	1 year.
48–904.03a [33–543a]	Drugs: maintaining place for manufacture or distribution.	5 years	3 years.
48–904.06 [33–546]	Drugs: distribution to minors		
	If a schedule I or II narcotic drug (e.g., heroin or cocaine) or PCP.	5 years	3 years.
	If schedule I or II drugs other than above (e.g., marijuana, hashish, methamphetamine), or schedule III or IV drugs.	3 years	2 years.
	If schedule V drugs	3 years	1 year.
48–904.07 [33–547]	Drugs: enlisting minors to sell	3 years	2 years.
48–904.07a [33–547.1].	Drugs: distribute or possess with intent to distribute in drug-free zones.		
	If schedule I or II narcotics or abusive drugs (e.g., heroin, cocaine, methamphetamine, or PCP).	5 years	3 years.
	If schedule I or II drugs other than above (e.g., marijuana, hashish), or schedule III or IV drugs.	3 years	2 years.
	If schedule V drugs	3 years	1 year.
48–904.08 [33–548]	Drugs: 2nd+ offense		

D.C. Code reference for conviction offense (former code reference in brackets)	Offense description	Original maximum authorized term of supervised release	Maximum authorized term of imprisonment at the first revocation
Note: This section does not apply if the offender was sentenced under 48–904.06.	If schedule I or II narcotics or abusive drugs (e.g., heroin, cocaine, methamphetamine, or PCP).	5 years	3 years.
	If schedule I or II drugs other than above (e.g., marijuana, hashish), or schedule III or IV drugs.	3 years	2 years.
	If schedule V drugs	3 years	1 year.
48–904.09 [33–549]	Drugs: attempt/conspiracy	the same as for the offense that was the object of the attempt or conspiracy.	the same as for the offense that was the object of the attempt or conspiracy.
48–1103(b) [33–603]	Drugs: possession of drug paraphernalia with intent to deliver or sell (2nd + offense).	3 years	1 year.
48–1103(c) [33–603]	Drugs: delivering drug paraphernalia to a minor.	3 years	2 years.
Title 50			
50–2203.01 [40–713].	Negligent homicide (vehicular)	3 years	2 years.
50–2207.01 [40–718].	Smoke screens	3 years	2 years.

NOTES: (1) An asterisk next to the offense description indicates that the offense is statutorily designated as a Class A felony.
(2) If the defendant must register as a sex offender, the Original Maximum Authorized Term of Supervised Release is the maximum period for which the offender may be required to register as a sex offender under D.C. Code 22–4002(a) and (b) (ten years or life). *See* D.C. Code 24–403.01(b)(4). Sex offender registration is required for crimes such as first degree sexual abuse, and these crimes are listed in this table with the notation "10 years if SOR" or "life if SOR" as the Original Maximum Authorized Term of Supervised Release. Sex offender registration, however, may also be required for numerous crimes (such as burglary or murder) if a sexual act or contact was involved or was the offender's purpose. In such cases, the offender's status will be determined by the presence of an order from the sentencing judge certifying that the defendant is a sex offender.
(3) If the defendant committed the offense before 5 p.m., August 11, 2000, the maximum authorized terms of imprisonment and supervised release shall be determined by reference to 18 U.S.C. 3583.

(d) *Imprisonment; successive revocations*. (1) When the Commission revokes a term of supervised release that was imposed by the Commission after a previous revocation of supervised release, the maximum authorized term of imprisonment is the maximum term of imprisonment permitted by paragraph (a) of this section, less the term or terms of imprisonment that were previously imposed by the Commission. In calculating such previously-imposed term or terms of imprisonment, the Commission shall use the term as imposed without deducting any good time credits that may have been earned by the offender prior to his release from prison. In no case shall the total of successive terms of imprisonment imposed by the Commission exceed the maximum authorized term of imprisonment at the first revocation.

(2) For example, if the maximum authorized term of imprisonment at the first revocation is three years and the original maximum authorized term of supervised release is five years, the Commission at the first revocation may have imposed a one-year term of imprisonment and a further four-year term of supervised release. At the second revocation, the maximum authorized term of imprisonment will be two years, *i.e.*, the maximum authorized term of imprisonment at the first revocation (three years) minus the one-year term of imprisonment that was imposed at the first revocation.

(e) *Further term of supervised release; successive revocations*. (1) When the Commission revokes a term of supervised release that was imposed by the Commission following a previous revocation of supervised release, the Commission may also impose a further term of supervised release. The maximum authorized length of such a term of supervised release shall be the original maximum authorized term of supervised release permitted by paragraph (b) of this section, less the total of the terms of imprisonment imposed

by the Commission on the same sentence (including the term of imprisonment imposed in the current revocation).

(2) For example, if the maximum authorized term of imprisonment at the first revocation is three years and the original maximum authorized term of supervised release is five years, the Commission at the first revocation may have imposed a one-year term of imprisonment and a four-year further term of supervised release. If, at a second revocation, the Commission imposes another one-year term of imprisonment, the maximum authorized further term of supervised release will be three years (the original five-year period minus the total of two years of imprisonment).

(f) *Effect of sentencing court imposing less than the original maximum authorized term of supervised release.* If the Commission has revoked supervised release, the maximum authorized period of further supervised release is determined by reference to the original maximum authorized term permitted for the offense of conviction (see paragraph (b) of this section), even if the sentencing court did not impose the original maximum authorized term permitted for the offense of conviction.

§ 2.220 Appeal.

A supervised releasee may appeal to the Commission a decision to revoke supervised release, impose a term of imprisonment, or impose a new term of supervised release after revocation. The provisions of § 2.26 on the time limits for filing and deciding the appeal, the grounds for appeal, the format of the appeal, the limits regarding the submission of exhibits, and voting requirements apply to an appeal submitted under this section.

PART 3—GAMBLING DEVICES

Sec.

3.1 Definition.
3.2 Assistant Attorney General, Criminal Division.
3.3 Registration.
3.4 Registration to be made by letter.
3.5 Forfeiture of gambling devices.

AUTHORITY: 89 Stat. 379; 5 U.S.C. 301, sec. 2, Reorganization Plan No. 2 of 1950, 64 Stat. 1261; 3 CFR, 1949–1953 Comp.

CROSS REFERENCE: For Organization Statement, Federal Bureau of Investigation, see subpart P of part 0 of this chapter.

SOURCE: Order No. 331–65, 30 FR 2316, Feb. 20, 1965, unless otherwise noted.

§ 3.1 Definition.

For the purpose of this part, the term *Act* means the Act of January 2, 1951, 64 Stat. 1134, as amended by the Gambling Devices Act of 1962, 76 Stat. 1075, 15 U.S.C. 1171 *et seq.*

§ 3.2 Assistant Attorney General, Criminal Division.

The Assistant Attorney General, Criminal Division, is authorized to exercise the power and authority of and to perform the functions vested in the Attorney General by the Act. (See also 28 CFR 0.55(i).)

(28 U.S.C. 509 and 510)

[Order No. 960–81, 46 FR 52354, Oct. 27, 1981]

§ 3.3 Registration.

Persons required to register pursuant to section 3 of the Act shall register with the Assistant Attorney General, Criminal Division, Department of Justice, Washington, DC 20530.

§ 3.4 Registration to be made by letter.

No special forms are prescribed for the purpose of registering under the Act. Registration shall be accomplished by a letter addressed to the Assistant Attorney General, Criminal Division, setting forth the information required by section 3(b)(4) of the Act. Registration should be made by registered or certified mail inasmuch as receipt of registrations will not otherwise be acknowledged. The registration requirement of the Act is an annual requirement. Any person engaged in any one or more of the activities for which registration is required under the Act must, in conformity with the provisions of the Act, register in each calendar year in which he engages in such activities.

§3.5 Forfeiture of gambling devices.

For purposes of seizure and forfeiture of gambling devices see section 8 of this chapter.

[Order No. 1128–86, 51 FR 8817, Mar. 17, 1986]

PART 4—PROCEDURE GOVERNING APPLICATIONS FOR CERTIFICATES OF EXEMPTION UNDER THE LABOR-MANAGEMENT REPORTING AND DISCLOSURE ACT OF 1959, AND THE EMPLOYEE RETIREMENT INCOME SECURITY ACT OF 1974

Sec.
4.1 Definitions.
4.2 Who may apply for Certificate of Exemption.
4.3 Contents of application.
4.4 Supporting affidavit; additional information.
4.5 Character endorsements.
4.6 Institution of proceedings.
4.7 Notice of hearing; postponements.
4.8 Hearing.
4.9 Representation.
4.10 Waiver of oral hearing.
4.11 Appearance; testimony; cross-examination.
4.12 Evidence which may be excluded.
4.13 Record for decision. Receipt of documents comprising record; timing and extension.
4.14 Administrative law judge's recommended decision; exceptions thereto; oral argument before Commission.
4.15 Certificate of Exemption.
4.16 Rejection of application.
4.17 Availability of decisions.

AUTHORITY: Secs. 504, 606, 73 Stat. 536, 540 (29 U.S.C. 504, 526); and secs. 411, 507a, 88 Stat. 887, 894 (29 U.S.C. 1111, 1137).

CROSS REFERENCE: For Organization Statement, U.S. Parole Commission, see subpart V of part 0 of this chapter.

SOURCE: 44 FR 6890, Feb. 2, 1979, unless otherwise noted.

§4.1 Definitions.

As used in this part:

(a) *Labor Act* means the Labor-Management Reporting and Disclosure Act of 1959 (73 Stat. 519).

(b) *Pension Act* means the Employee Retirement Income Security Act of 1974 (Pub. L. 93–406) (88 Stat. 829).

(c) *Acts* means both of the above statutes.

(d) *Commission* means the United States Parole Commission.

(e) *Secretary* means the Secretary of Labor or his designee.

(f) For proceedings under the ''Labor Act''

(1) *Employer* means the labor organization, or person engaged in an industry or activity affecting commerce, or group or association of employers dealing with any labor organization, which an applicant under §4.2 desires to serve in a capacity for which he is ineligible under section 504(a) of the ''Labor Act''.

(2) All other terms used in this part shall have the same meaning as identical or comparable terms when those terms are used in the ''Labor Act''.

(g) For proceedings under the ''Pension Act''

(1) *Employer* means the employee benefit plan with which an applicant under §4.2 desires to serve in a capacity for which he is ineligible under section 411(a) of the ''Pension Act'' (29 U.S.C. section 1111).

(2) All other terms used in this part shall have the same meaning as identical or comparable terms when those terms are used in the ''Pension Act''.

§4.2 Who may apply for Certificate of Exemption.

Any person who has been convicted of any of the crimes enumerated in section 504(a) of the ''Labor Act'' whose service, present or prospective, as described in that section is or would be prohibited by that section because of such a conviction or a prison term resulting therefrom; or any person who has been convicted of any of the crimes enumerated in section 411(a) of the ''Pension Act'' (29 U.S.C. section 1111) whose service, present or prospective, as described in that section is or would be prohibited by that section because of such a conviction or a prison term resulting therefrom, may apply to the Commission for a Certificate of Exemption from such a prohibition under the applicable Act.

§4.3 Contents of application.

A person applying for a Certificate of Exemption shall file with the Office of General Counsel, U.S. Parole Commission, 5550 Friendship Boulevard, Chevy

Chase, Maryland 20815–7286, a signed application under oath, in seven copies, which shall set forth clearly and completely the following information:

(a) The name and address of the applicant and any other names used by the applicant and dates of such use.

(b) A statement of all convictions and imprisonments which prohibit the applicant's service under the provisions of the applicable Act.

(c) Whether any citizenship rights were revoked as a result of conviction or imprisonment and if so the name of the court and date of judgment thereof and the extent to which such rights have been restored.

(d) The name and location of the employer and a description of the office or paid position, including the duties thereof, for which a Certificate of Exemption is sought.

(e) A full explanation of the reasons or grounds relied upon to establish that the applicant's service in the office or employment for which a Certificate of Exemption is sought would not be contrary to the purposes of the applicable Act.

(f) A statement that the applicant does not, for the purpose of the proceeding, contest the validity of any conviction.

(28 U.S.C. 509 and 510, 5 U.S.C. 301)

[44 FR 6890, Feb. 2, 1979, as amended at 46 FR 52354, Oct. 27, 1981]

§ 4.4 Supporting affidavit; additional information.

(a) Each application filed with the Commission must be accompanied by a signed affidavit, in 7 copies, setting forth the following concerning the personal history of the applicant:

(1) Place and date of birth. If the applicant was not born in the United States, the time of first entry and port of entry, whether he is a citizen of the United States, and if naturalized, when, where and how he became naturalized and the number of his Certificate of Naturalization.

(2) Extent of education, including names of schools attended.

(3) History of marital and family status, including a statement as to whether any relatives by blood or marriage are currently serving in any capacity with any employee benefit plan, or labor organization, group or association of employers dealing with labor organizations or industrial labor relations group, or currently advising or representing any employer with respect to employee organizing, concerted activities, or collective bargaining activities.

(4) Present employment, including office or offices held, with a description of the duties thereof.

(5) History of employment, including military service, in chronological order.

(6) Licenses held, at the present time or at any time in the past five years, to possess or carry firearms.

(7) Veterans' Administration claim number and regional office handling claim, if any.

(8) A listing (not including traffic offenses for which a fine of not more than $25 was imposed or collateral of not more than $25 was forfeited) by date and place of all arrests, convictions for felonies, misdemeanors, or offenses and all imprisonment or jail terms resulting therefrom, together with a statement of the circumstances of each violation which led to arrest or conviction.

(9) Whether applicant was ever on probation or parole, and if so the names of the courts by which convicted and the dates of conviction.

(10) Names and locations of all employee benefit plans, labor organizations or employer groups with which the applicant has ever been associated or employed, and all employers or employee benefit plans which he has advised or represented concerning employee organizing, concerted activities, or collective bargaining activities, together with a description of the duties performed in each such employment or association.

(11) A statement of applicant's net worth, including all assets held by him or in the names of others for him, the amount of each liability owed by him or by him together with any other person and the amount and source of all income during the immediately preceding five calendar years plus income to date of application.

(12) Any other information which the applicant feels will assist the Commission in making its determination.

(b) The Commission may require of the applicant such additional information as it deems appropriate for the proper consideration and disposition of his application.

§4.5 Character endorsements.

Each application filed with the Commission must be accompanied by letters or other forms of statement (in three copies) from six persons addressed to the Chairman, U.S. Parole Commission, attesting to the character and reputation of the applicant. The statement as to character shall indicate the length of time the writer has known applicant, and shall describe applicant's character traits as they relate to the position for which the exemption is sought and the duties and responsibilities thereof. The statement as to reputation shall attest to applicant's reputation in his community or in his circle of business or social acquaintances. Each letter or other form of statement shall indicate that it has been submitted in compliance with procedures under the respective Act and that applicant has informed the writer of the factual basis of his application. The persons submitting letters or other forms of statement shall not include relatives by blood or marriage, prospective employers, or persons serving in any official capacity with an employee benefit plan, labor organization, group or association of employers dealing with labor organizations or industrial labor relations group.

§4.6 Institution of proceedings.

All applications and supporting documents received by the Commission shall be reviewed for completeness by the Office of General Counsel of the Parole Commission and if complete and fully in compliance with the regulations of this part the Office of General Counsel shall accept them for filing. Applicant and/or his representative will be notified by the Office of General Counsel of any deficiency in the application and supporting documents. The amount of time allowed for deficiencies to be remedied will be specified in said notice. In the event such deficiencies are not remedied within the specified period or any extension thereof, granted after application to the Commission in writing within the specified period, the application shall be deemed to have been withdrawn and notice thereof shall be given to applicant.

§4.7 Notice of hearing; postponements.

Upon the filing of an application, the Commission shall:

(a) Set the application for a hearing on a date within a reasonable time after its filing and notify the applicant of such date by certified mail;

(b) Give notice, as required by the respective Act, to the appropriate State, County, or Federal prosecuting officials in the jurisdiction or jurisdictions in which the applicant was convicted that an application for a Certificate of Exemption has been filed and the date for hearing thereon; and

(c) Notify the Secretary that an application has been filed and the date for hearing thereon and furnish him copies of the application and all supporting documents.

Any party may request a postponement of a hearing date in writing from the Office of General Counsel at any time prior to ten (10) days before the scheduled hearing. No request for postponement other than the first for any party will be considered unless a showing is made of cause entirely beyond the control of the requester. The granting of such requests will be within the discretion of the Commission. In the event of a failure to appear on the hearing date as originally scheduled or extended, the absent party will be deemed to have waived his right to a hearing. The hearing will be conducted with the parties present participating and documentation, if any, of the absent party entered into the record.

§4.8 Hearing.

The hearing on the application shall be held at the offices of the Commision in Washington, DC, or elsewhere as the Commission may direct. The hearing shall be held before the Commission, before one or more Commissioners, or before one or more administrative law judges appointed as provided by section 11 of the Administrative Procedure Act (5 U.S.C. 3105) as the Commission by order shall determine. Hearings shall

be conducted in accordance with sections 7 and 8 of the Administrative Procedure Act (5 U.S.C. 556, 557).

§ 4.9 Representation.

The applicant may be represented before the Commission by any person who is a member in good standing of the bar of the Supreme Court of the United States or of the highest court of any State or territory of the United States, or the District of Columbia, and who is not under any order of any court suspending, enjoining, restraining, or disbarring him from, or otherwise restricting him in, the practice of law. Whenever a person acting in a representative capacity appears in person or signs a paper in practice before the Commission, his personal appearance or signature shall constitute a representation to the Commission that under the provisions of this part and applicable law he is authorized and qualified to represent the particular person in whose behalf he acts. Further proof of a person's authority to act in a representative capacity may be required. When any applicant is represented by an attorney at law, any notice or other written communication required or permitted to be given to or by such applicant shall be given to or by such attorney. If an applicant is represented by more than one attorney, service by or upon any one of such attorneys shall be sufficient.

§ 4.10 Waiver of oral hearing.

The Commission upon receipt of a statement from the Secretary that he does not object, and in the absence of any request for oral hearing from the others to whom notice has been sent pursuant to § 4.7 may grant an application without receiving oral testimony with respect to it.

§ 4.11 Appearance; testimony; cross-examination.

(a) The applicant shall appear and, except as otherwise provided in § 4.10, shall testify at the hearing and may cross-examine witnesses.

(b) The Secretary and others to whom notice has been sent pursuant to § 4.7 shall be afforded an opportunity to appear and present evidence and cross-examine witnesses, at any hearing.

(c) In the discretion of the Commission or presiding officer, other witnesses may testify at the hearing.

§ 4.12 Evidence which may be excluded.

The Commission or officer presiding at the hearing may exclude irrelevant, untimely, immaterial, or unduly repetitious evidence.

§ 4.13 Record for decision. Receipt of documents comprising record; timing and extension.

(a) The application and all supporting documents, the transcript of the testimony and oral argument at the hearing, together with any exhibits received and other documents filed pursuant to these procedures and/or the Administrative Procedures Act shall be made parts of the record for decision.

(b) At the conclusion of the hearing the presiding officer shall specify the time for submission of proposed findings of fact and conclusions of law (unless waived by the parties); transcript of the hearing, and supplemental exhibits, if any. He shall set a tentative date for the recommended decision based upon the timing of these preliminary steps. Extensions of time may be requested by any party, in writing, from the Parole Commission. Failure of any party to comply with the time frame as established or extended will be deemed to be a waiver on his part of his right to submit the document in question. The adjudication will proceed and the absence of said document and reasons therefor will be noted in the record.

§ 4.14 Administrative law judge's recommended decision; exceptions thereto; oral argument before Commission.

Whenever the hearing is conducted by an administrative law judge, at the conclusion of the hearing he shall submit a recommended decision to the Commission, which shall include a statement of findings and conclusions, as well as the reasons therefor. The applicant, the Secretary and others to whom notice has been sent pursuant to § 4.7 may file with the Commission, within 10 days after having been furnished a copy of the recommended decision, exceptions thereto and reasons

in support thereof. The Commission may order the taking of additional evidence and may request the applicant and others to appear before it. The Commission may invite oral argument before it on such questions as it desires.

§4.15 Certificate of Exemption.

The applicant, the Secretary and others to whom notice has been sent pursuant to §4.7 shall be served a copy of the Commission's decision and order with respect to each application. Whenever the Commission decision is that the application be granted, the Commission shall issue a Certificate of Exemption to the applicant. The Certificate of Exemption shall extend only to the stated employment with the prospective employer named in the application.

§4.16 Rejection of application.

No application for a Certificate of Exemption shall be accepted from any person whose application for a Certificate of Exemption has been withdrawn, deemed withdrawn due to failure to remedy deficiencies in a timely manner, or denied by the Commission within the preceding 12 months.

§4.17 Availability of decisions.

The Commission's Decisions under both Acts are available for examination in the Office of the U.S. Parole Commission, 5550 Friendship Boulevard, Chevy Chase, Maryland 20815–7286. Copies will be mailed upon written request to the Office of General Counsel, U.S. Parole Commission, at the above address at a cost of ten cents per page.

(28 U.S.C. 509 and 510, 5 U.S.C. 301)

[44 FR 6890, Feb. 2, 1979, as amended at 46 FR 52354, Oct. 27, 1981]

PART 5—ADMINISTRATION AND ENFORCEMENT OF FOREIGN AGENTS REGISTRATION ACT OF 1938, AS AMENDED

Sec.

5.1 Administration and enforcement of the Act.
5.2 Inquiries concerning application of the Act.
5.3 Filing of a registration statement.
5.4 Computation of time.
5.5 Registration fees.
5.100 Definition of terms.
5.200 Registration.
5.201 Exhibits.
5.202 Short form registration statement.
5.203 Supplemental statement.
5.204 Amendments.
5.205 Termination of registration.
5.206 Language and wording of registration statement.
5.207 Incorporation by reference.
5.208 Disclosure of foreign principals.
5.209 Information relating to employees.
5.210 Amount of detail required in information relating to registrant's activities and expenditures.
5.211 Sixty-day period to be covered in initial statement.
5.300 Burden of establishing availability of exemption.
5.301 Exemption under section 3(a) of the Act.
5.302 Exemptions under sections 3(b) and (c) of the Act.
5.303 Exemption available to persons accredited to international organizations.
5.304 Exemptions under sections 3(d) and (e) of the Act.
5.305 Exemption under section 3(f) of the Act.
5.306 Exemption under section 3(g) of the Act.
5.307 Exemption under 3(h) of the Act.
5.400 Filing of informational materials.
5.402 Labeling informational materials.
5.500 Maintenance of books and records.
5.501 Inspection of books and records.
5.600 Public examination of records.
5.601 Copies of records and information available.
5.800 Ten-day filing requirement.
5.801 Activity beyond 10-day period.
5.1101 Copies of the Report of the Attorney General.

AUTHORITY: 28 U.S.C. 509, 510; Section 1, 56 Stat. 248, 257 (22 U.S.C. 620); title I, Pub. L. 102–395, 106 Stat. 1828, 1831 (22 U.S.C. 612 note).

SOURCE: Order No. 376–67, 32 FR 6362, Apr. 22, 1967, unless otherwise noted.

§5.1 Administration and enforcement of the Act.

(a) The administration and enforcement of the Foreign Agents Registration Act of 1938, as amended (22 U.S.C. 611–621) (Act), subject to the general supervision and direction of the Attorney General, is assigned to, and conducted, handled, and supervised by, the Assistant Attorney General for National Security.

(b) The Assistant Attorney General for National Security is authorized to prescribe such forms, in addition to or in lieu of those specified in the regulations in this part, as may be necessary to carry out the purposes of this part.

(c) Copies of the Act, and of the rules, regulations, and forms prescribed pursuant to the Act, and information concerning the foregoing may be obtained upon request without charge from the National Security Division, Department of Justice, Washington, DC 20530.

[Order No. 2865–2007, 72 FR 10068, Mar. 7, 2007]

§ 5.2 Inquiries concerning application of the Act.

(a) *General.* Any present or prospective agent of a foreign principal, or the agent's attorney, may request from the Assistant Attorney General for National Security a statement of the present enforcement intentions of the Department of Justice under the Act with respect to any presently contemplated activity, course of conduct, expenditure, receipt of money or thing of value, or transaction, and specifically with respect to whether the same requires registration and disclosure pursuant to the Act, or is excluded from coverage or exempted from registration and disclosure under any provision of the Act.

(b) *Anonymous, hypothetical, nonparty and ex post facto review requests excluded.* The entire transaction which is the subject of the review request must be an actual, as opposed to hypothetical, transaction and involve disclosed, as opposed to anonymous, agents and principals. Review requests must be submitted by a party to the transaction or the party's attorney, and have no application to a party that does not join in the request. A review request may not involve only past conduct.

(c) *Fee.* All requests for statements of the Department's present enforcement intentions must be accompanied by a non-refundable filing fee submitted in accordance with § 5.5.

(d) *Address.* A review request must be submitted in writing to the Assistant Attorney General for National Security, Department of Justice, Washington, DC 20530.

(e) *Contents.* A review request shall be specific and contain in detail all relevant and material information bearing on the actual activity, course of conduct, expenditure, receipt of money or thing of value, or transaction for which review is requested. There is no prescribed format for the request, but each request must include:

(1) The identity(ies) of the agent(s) and foreign principal(s) involved;

(2) The nature of the agent's activities for or in the interest of the foreign principal;

(3) A copy of the existing or proposed written contract with the foreign principal or a full description of the terms and conditions of each existing or proposed oral agreement; and

(4) The applicable statutory or regulatory basis for the exemption or exclusion claimed.

(f) *Certification.* If the requesting party is an individual, the review request must be signed by the prospective or current agent, or, if the requesting party is not an individual, the review request must be signed on behalf of each requesting party by an officer, a director, a person performing the functions of an officer or a director of, or an attorney for, the requesting party. Each such person signing the review request must certify that the review request contains a true, correct and complete disclosure with respect to the proposed conduct.

(g) *Additional information.* Each party shall provide any additional information or documents the National Security Division may thereafter request in order to review a matter. Any information furnished orally shall be confirmed promptly in writing, signed by the same person who signed the initial review request and certified to be a true, correct and complete disclosure of the requested information.

(h) *Outcomes.* After submission of a review request, the National Security Division, in its discretion, may state its present enforcement intention under the Act with respect to the proposed conduct; may decline to state its present enforcement intention; or, if circumstances warrant, may take such other position or initiate such other action as it considers appropriate. Any

requesting party or parties may withdraw a review request at any time. The National Security Division remains free, however, to submit such comments to the requesting party or parties as it deems appropriate. Failure to take action after receipt of a review request, documents or information, whether submitted pursuant to this procedure or otherwise, shall not in any way limit or stop the National Security Division from taking any action at such time thereafter as it deems appropriate. The National Security Division reserves the right to retain any review request, document or information submitted to it under this procedure or otherwise and to use any such request, document or information for any governmental purpose.

(i) *Time for response*. The National Security Division shall respond to any review request within 30 days after receipt of the review request and of any requested additional information and documents.

(j) *Written decisions only*. The requesting party or parties may rely only upon a written Foreign Agents Registration Act review letter signed by the Assistant Attorney General for National Security or his delegate.

(k) *Effect of review letter*. Each review letter can be relied upon by the requesting party or parties to the extent the disclosure was accurate and complete and to the extent the disclosure continues accurately and completely to reflect circumstances after the date of issuance of the review letter.

(l) *Compliance*. Neither the submission of a review request, nor its pendency, shall in any way alter the responsibility of the party or parties to comply with the Act.

(m) *Confidentiality*. Any written material submitted pursuant to a request made under this section shall be treated as confidential and shall be exempt from disclosure.

[Order No. 1757–93, 58 FR 37418, July 12, 1993, as amended by Order No. 2865–2007, 72 FR 10068, Mar. 7, 2007]

§5.3 Filing of a registration statement.

All statements, exhibits, amendments, and other documents and papers required to be filed under the Act or under this part shall be submitted in triplicate to the Registration Unit. An original document and two duplicates meeting the requirements of Rule 1001(4), Federal Rules of Evidence (28 U.S.C. Appendix), shall be deemed to meet this requirement. Filing of such documents may be made in person or by mail, and they shall be deemed to be filed upon their receipt by the Registration Unit.

[Order No. 376–67, 32 FR 6362, Apr. 22, 1967, as amended by Order No. 523–73, 38 FR 18235, July 9, 1973; Order No. 1757–93, 58 FR 37419, July 12, 1993]

§5.4 Computation of time.

Sundays and holidays shall be counted in computing any period of time prescribed in the Act or in the rules and regulations in this part.

§5.5 Registration fees.

(a) A registrant shall pay a registration fee with each initial registration statement filed under §5.200 and each supplemental registration statement under §5.203 at the time such registration statement is filed. The registration fee may be paid by cash or by check or money order made payable to ''FARA Registration Unit''. The Registration Unit, in its discretion, may require that the fee be paid by a certified or cashier's check or by a United States Postal money order.

(b) Payment of fees shall accompany any order for copies or request for information, and all applicable fees shall be collected before copies or information will be made available. Payment may be made by cash or by check or money order made payable to ''FARA Registration Unit''. The Registration Unit, in its discretion, may require that the fee be paid by a certified or cashier's check or by a United States Postal money order.

(c) Registration fees shall be waived in whole or in part, as appropriate, in the case of any individual person required to register under the Act who has demonstrated to the satisfaction of the Registration Unit that he or she is financially unable to pay the fees in their entirety. An individual seeking to avail himself or herself of this provision shall file with the registration statement a declaration made in compliance with section 1746 of title 28,

United States Code, setting forth the information required by Form 4, Federal Rules of Appellate Procedure (28 U.S.C. appendix).

(d) The fees shall be as follows:

(1) For initial registration statements (including an exhibit A for one foreign principal) under § 5.200: $305.00;

(2) For supplemental registration statements under § 5.203: $305.00 per foreign principal;

(3) For exhibit A under § 5.201(a)(1): $305.00 per foreign principal not currently reported under § 5.200 or § 5.203;

(4) For exhibit B under § 5.201(a)(2): no fee;

(5) For exhibits C and D (no forms) under § 5.201: no fee;

(6) For short-form registration statements under § 5.202: no fee;

(7) For amendments under § 5.204; no fee;

(8) For statements of present enforcement intentions under § 5.2: $96.00 per review request;

(9) For each quarter hour of search time under § 5.601: $4.00;

(10) For copies of registration statements and supplements, amendments, exhibits thereto, dissemination reports, informational materials, and copies of political propaganda and other materials contained in the public files, under § 5.601: fifty cents ($.50) per copy of each page of the material requested;

(11) For copies of registration statements and supplements, amendments, exhibits thereto, dissemination reports, informational materials, and copies of political propaganda and other materials contained in the public files, produced by computer, such as tapes or printouts, under § 5.601: actual direct cost of producing the copy, including the apportionable salary costs; and

(12) For computer searches of records through the use of existing programming: Direct actual costs, including the cost of operating a central processing unit for that portion of operating time that is directly attributable to searching for records responsive to a request and the salary costs apportionable to the search.

(e) The cost of delivery of any document by the Registration Unit by any means other than ordinary mail shall be charged to the requester at a rate sufficient to cover the expense to the Registration Unit.

(f) The Assistant Attorney General is hereby authorized to adjust the fees established by this section from time to time to reflect and recover the costs of the administration of the Registration Unit under the Act.

(g) Fees collected under this provision shall be available for the support of the Registration Unit.

(h) Notwithstanding § 5.3, no document required to be filed under the Act shall be deemed to have been filed unless it is accompanied by the applicable fee except as provided by paragraph (c) of this section.

[Order No. 1757–93, 58 FR 37419, July 12, 1993, as amended by Order No. 2674–2003, 68 FR 33630, June 5, 2003]

§ 5.100 Definition of terms.

(a) As used in this part:

(1) The term *Act* means the Foreign Agents Registration Act of 1938, as amended (22 U.S.C. 611–621).

(2) The term *Attorney General* means the Attorney General of the United States.

(3) The term *Assistant Attorney General* means the Assistant Attorney General for National Security, Department of Justice, Washington, DC 20530.

(4) The term *Secretary of State* means the Secretary of State of the United States.

(5) The term *rules and regulations* includes the regulations in this part and all other rules and regulations prescribed by the Attorney General pursuant to the Act and all registration forms and instructions thereon that may be prescribed by the regulations in this part or by the Assistant Attorney General for National Security.

(6) The term *registrant* means any person who has filed a registration statement with the Registration Unit, pursuant to section 2(a) of the Act and § 5.3.

(7) Unless otherwise specified, the term *agent of a foreign principal* means an agent of a foreign principal required to register under the Act.

(8) The term *foreign principal* includes a person any of whose activities are directed or indirectly supervised, directed, controlled, financed, or subsidized in whole or in major part by a foreign principal as that term is defined in section 1(b) of the Act.

(9) The term *initial statement* means the statement required to be filed with the Attorney General under section 2(a) of the Act.

(10) The term *supplemental statement* means the supplement required to be filed with the Attorney General under section 2(b) of the Act at intervals of 6 months following the filing of the initial statement.

(11) The term *final statement* means the statement required to be filed with the Attorney General following the termination of the registrant's obligation to register.

(12) The term *short form registration statement* means the registration statement required to be filed by certain partners, officers, directors, associates, employees, and agents of a registrant.

(b) As used in the Act, the term *control* or any of its variants shall be deemed to include the possession or the exercise of the power, directly or indirectly, to determine the policies or the activities of a person, whether through the ownership of voting rights, by contract, or otherwise.

(c) The term *agency* as used in sections 1(c), 1(o), 3(g), and 4(e) of the Act shall be deemed to refer to every unit in the executive and legislative branches of the Government of the United States, including committees of both Houses of Congress.

(d) The term *official* as used in sections 1(c), 1(o), 3(g), and 4(e) of the Act shall be deemed to include Members and officers of both Houses of Congress as well as officials in the executive branch of the Government of the United States.

(e) The terms *formulating, adopting, or changing,* as used in section 1(o) of the Act, shall be deemed to include any activity which seeks to maintain any existing domestic or foreign policy of the United States. They do not include making a routine inquiry of a Government official or employee concerning a current policy or seeking administrative action in a matter where such policy is not in question.

(f) The term *domestic or foreign policies of the United States*, as used in sections 1 (o) and (p) of the Act, shall be deemed to relate to existing and proposed legislation, or legislative action generally; treaties; executive agreements, proclamations, and orders; decisions relating to or affecting departmental or agency policy, and the like.

[Order No. 376–67, 32 FR 6362, Apr. 22, 1967, as amended by Order No. 523–73, 38 FR 18235, July 9, 1973; Order No. 2674–2003, 68 FR 33630, June 5, 2003; Order No. 2865–2007, 72 FR 10068, Mar. 7, 2007]

§5.200 Registration.

(a) Registration under the Act is accomplished by the filing of an initial statement together with all the exhibits required by §5.201 and the filing of a supplemental statement at intervals of 6 months for the duration of the principal-agent relationship requiring registration.

(b) The initial statement shall be filed on a form provided by the Registration Unit.

(28 U.S.C. 509 and 510; 5 U.S.C. 301)

[Order No. 376–67, 32 FR 6362, Apr. 22, 1967, as amended by Order No. 960–81, 46 FR 52355, Oct. 27, 1981; Order No. 2674–2003, 68 FR 33630, June 5, 2003]

§5.201 Exhibits.

(a) The following described exhibits are required to be filed for each foreign principal of the registrant:

(1) *Exhibit A*. This exhibit, which shall be filed on a form provided by the Registration Unit, shall set forth the information required to be disclosed concerning each foreign principal.

(2) *Exhibit B*. This exhibit, which shall be filed on a form provided by the Registration Unit, shall set forth the agreement or understanding between the registrant and each of his foreign principals as well as the nature and method of performance of such agreement or understanding and the existing or proposed activities engaged in or to be engaged in, including political activities, by the registrant for the foreign principal.

(b) Any change in the information furnished in exhibit A or B shall be reported to the Registration Unit within

10 days of such change. The filing of a new exhibit may then be required by the Assistant Attorney General.

(c) Whenever the registrant is an association, corporation, organization, or any other combination of individuals, the following documents shall be filed as exhibit C:

(1) A copy of the registrant's charter, articles of incorporation or association, or constitution, and a copy of its bylaws, and amendments thereto;

(2) A copy of every other instrument or document, and a statement of the terms and conditions of every oral agreement, relating to the organization, powers and purposes of the registrant.

(d) The requirement to file any of the documents described in paragraphs (c)(1) and (2) of this section may be wholly or partially waived upon written application by the registrant to the Assistant Attorney General setting forth fully the reasons why such waiver should be granted.

(e) Whenever a registrant, within the United States, receives or collects contributions, loans, money, or other things of value, as part of a fund-raising campaign, for or in the interests of his foreign principal, he shall file as exhibit D a statement so captioned setting forth the amount of money or the value of the thing received or collected, the names and addresses of the persons from whom such money or thing of value was received or collected, and the amount of money or a description of the thing of value transmitted to the foreign principal as well as the manner and time of such transmission.

(28 U.S.C. 509 and 510; 5 U.S.C. 301)

[Order No. 376–67, 32 FR 6362, Apr. 22, 1967, as amended by Order No. 523–73, 38 FR 18235, July 9, 1973; Order No. 960–81, 46 FR 52355, Oct. 27, 1981; Order No. 2674–2003, 68 FR 33630, June 5, 2003]

§ 5.202 Short form registration statement.

(a) Except as provided in paragraphs (b), (c), and (d) of this section, each partner, officer, director, associate, employee, and agent of a registrant is required to file a registration statement under the Act. Unless the Assistant Attorney General specifically directs otherwise, this obligation may be satisfied by the filing of a short form registration statement.

(b) A partner, officer, director, associate, employee, or agent of a registrant who does not engage directly in registrable activity in furtherance of the interests of the foreign principal is not required to file a short form registration statement.

(c) An employee or agent of a registrant whose services in furtherance of the interests of the foreign principal are rendered in a clerical, secretarial, or in a related or similar capacity, is not required to file a short form registration statement.

(d) Whenever the agent of a registrant is a partnership, association, corporation, or other combination of individuals, and such agent is not within the exemption of paragraph (b) of this section, only those partners, officers, directors, associates, and employees who engage directly in activity in furtherance of the interests of the registrant's foreign principal are required to file a short form registration statement.

(e) The short form registration statement shall be filed on Form OBD–66. Any change affecting the information furnished with respect to the nature of the services rendered by the person filing the statement, or the compensation he receives, shall require the filing of a new short form registration statement within 10 days after the occurrence of such change. There is no requirement to file exhibits or supplemental statements to a short form registration statement.

(28 U.S.C. 509 and 510; 5 U.S.C. 301)

[Order No. 376–67, 32 FR 6362, Apr. 22, 1967, as amended by Order No. 960–81, 46 FR 52355, Oct. 27, 1981; Order No. 2674–2003, 68 FR 33630, June 5, 2003]

§ 5.203 Supplemental statement.

(a) Supplemental statements shall be filed on a form provided by the Registration Unit.

(b) The obligation to file a supplemental statement at 6-month intervals during the agency relationship shall continue even though the registrant has not engaged during the period in any activity in the interests of his foreign principal.

(c) The time within which to file a supplemental statement may be extended for sufficient cause shown in a written application to the Assistant Attorney General.

(28 U.S.C. 509 and 510; 5 U.S.C. 301)

[Order No. 376–67, 32 FR 6362, Apr. 22, 1967, as amended by Order No. 960–81, 46 FR 52355, Oct. 27, 1981; Order No. 2674–2003, 68 FR 33630, June 5, 2003]

§ 5.204 Amendments.

(a) An initial, supplemental, or final statement which is deemed deficient by the Assistant Attorney General must be amended upon his request. Such amendment shall be filed upon a form provided by the Registration Unit and shall identify the item of the statement to be amended.

(b) A change in the information furnished in an initial or supplemental statement under clauses (3), (4), (6), and (9) of section 2(a) of the Act shall be by amendment, unless the notice which is required to be given of such change under section 2(b) is deemed sufficient by the Assistant Attorney General.

(28 U.S.C. 509 and 510; 5 U.S.C. 301)

[Order No. 376–67, 32 FR 6362, Apr. 22, 1967, as amended by Order No. 960–81, 46 FR 52355, Oct. 27, 1981; Order No. 2674–2003, 68 FR 33630, June 5, 2003]

§ 5.205 Termination of registration.

(a) A registrant shall, within 30 days after the termination of his obligation to register, file a final statement on the supplemental statement form with the Registration Unit for the final period of the agency relationship not covered by any previous statement.

(b) Registration under the Act shall be terminated upon the filing of a final statement, if the registrant has fully discharged all his obligations under the Act.

(c) A registrant whose activities on behalf of each of his foreign principals become confined to those for which an exemption under section 3 of the Act is available may file a final statement notwithstanding the continuance of the agency relationship with the foreign principals.

(d) Registration under the Act may be terminated upon a finding that the registrant is unable to file the appropriate forms to terminate the registration as a result of the death, disability, or dissolution of the registrant or where the requirements of the Act cannot be fulfilled by a continuation of the registration.

(28 U.S.C. 509 and 510; 5 U.S.C. 301)

[Order No. 376–67, 32 FR 6362, Apr. 22, 1967, as amended by Order No. 523–73, 38 FR 18235, July 9, 1973; Order No. 960–81, 46 FR 52355, Oct. 27, 1981; Order No. 1757–93, 58 FR 37419, July 12, 1993; Order No. 2674–2003, 68 FR 33630, June 5, 2003]

§ 5.206 Language and wording of registration statement.

(a) Except as provided in the next sentence, each statement, amendment, exhibit, or notice required to be filed under the Act shall be submitted in the English language. An exhibit may be filed even though it is in a foreign language if it is accompanied by an English translation certified under oath by the translator before a notary public, or other person authorized by law to administer oaths for general purposes, as a true and accurate translation.

(b) A statement, amendment, exhibit, or notice required to be filed under the Act should be typewritten, but will be accepted for filing if it is written legibly in ink, or if it is filed in an electronic format acceptable to the Registration Unit.

(c) Copies of any document made by any of the duplicating processes may be filed pursuant to the Act if they are clear and legible.

(d) A response shall be made to every item on each pertinent form, unless a registrant is specifically instructed otherwise in the form. Whenever the item is inapplicable or the appropriate response to an item is ''none,'' an express statement to that effect shall be made.

[Order No. 376–67, 32 FR 6362, Apr. 22, 1967, as amended by Order No. 2674–2003, 68 FR 33630, June 5, 2003]

§ 5.207 Incorporation by reference.

(a) Each initial, supplemental, and final statement shall be complete in and of itself. Incorporation of information by reference to statements previously filed is not permissible.

(b) Whenever insufficient space is provided for response to any item in a form, reference shall be made in such space to a full insert page or pages on which the item number and inquiry shall be restated and a complete answer given. Inserts and riders of less than full page size should not be used.

§ 5.208 Disclosure of foreign principals.

A registrant who represents more than one foreign principal is required to list in the statements he files under the Act only those foreign principals for whom he is not entitled to claim exemption under section 3 of the Act.

§ 5.209 Information relating to employees.

A registrant shall list in the statements he files under the Act only those employees whose duties require them to engage directly in activities in furtherance of the interests of the foreign principal.

§ 5.210 Amount of detail required in information relating to registrant's activities and expenditures.

A statement is ''detailed'' within the meaning of clauses 6 and 8 of section 2 (a) of the Act when it has that degree of specificity necessary to permit meaningful public evaluation of each of the significant steps taken by a registrant to achieve the purposes of the agency relation.

§ 5.211 Sixty-day period to be covered in initial statement.

The 60-day period referred to in clauses 5, 7, and 8 of section 2(a) of the Act shall be measured from the time that a registrant has incurred an obligation to register and not from the time that he files his initial statement.

§ 5.300 Burden of establishing availability of exemption.

The burden of establishing the availability of an exemption from registration under the Act shall rest upon the person for whose benefit the exemption is claimed.

§ 5.301 Exemption under section 3(a) of the Act.

(a) A consular officer of a foreign government shall be considered duly accredited under section 3(a) of the Act whenever he has received formal recognition as such, whether provisionally or by exequatur, from the Secretary of State.

(b) The exemption provided by section 3(a) of the Act to a duly accredited diplomatic or consular officer is personal and does not include within its scope an office, bureau, or other entity.

§ 5.302 Exemptions under sections 3(b) and (c) of the Act.

The exemptions provided by sections 3(b) and (c) of the Act shall not be available to any person described therein unless he has filed with the Secretary of State a fully executed Notification of Status with a Foreign Government (Form D.S. 394).

§ 5.303 Exemption available to persons accredited to international organizations.

Persons designated by foreign governments as their representatives in or to an international organization, other than nationals of the United States, are exempt from registration under the Act in accordance with the provisions of the International Organizations Immunities Act, if they have been duly notified to and accepted by the Secretary of State as such representatives, officers, or employees, and if they engage exclusively in activities which are recognized as being within the scope of their official functions.

§ 5.304 Exemptions under sections 3(d) and (e) of the Act.

(a) As used in section 3(d), the term *trade or commerce* shall include the exchange, transfer, purchase, or sale of commodities, services, or property of any kind.

(b) For the purpose of section 3(d) of the Act, activities of an agent of a foreign principal as defined in section 1(c) of the Act, in furtherance of the bona fide trade or commerce of such foreign

principal, shall be considered ''private,'' even though the foreign principal is owned or controlled by a foreign government, so long as the activities do not directly promote the public or political interests of the foreign government.

(c) For the purpose of section 3(d)(2) of the Act, a person engaged in political activities on behalf of a foreign corporation, even if owned in whole or in part by a foreign government, will not be serving predominantly a foreign interest where the political activities are directly in furtherance of the bona fide commercial, industrial, or financial operations of the foreign corporation, so long as the political activities are not directed by a foreign government or foreign political party and the political activities do not directly promote the public or political interests of a foreign government or of a foreign political party.

(d) The exemption provided by section 3(e) of the Act shall not be available to any person described therein if he engages in political activities as defined in section 1(o) of the Act for or in the interests of his foreign principal.

[Order No. 376–67, 32 FR 6362, Apr. 22, 1967, as amended by Order No. 463–71, 36 FR 12212, June 29, 1971; Order No. 2674–2003, 68 FR 33630, June 5, 2003]

§ 5.305 Exemption under section 3(f) of the Act.

The exemption provided by section 3(f) of the Act shall not be available unless the President has, by publication in the FEDERAL REGISTER, designated for the purpose of this section the country the defense of which he deems vital to the defense of the United States.

§ 5.306 Exemption under section 3(g) of the Act.

For the purpose of section 3(g) of the Act—

(a) Attempts to influence or persuade agency personnel or officials other than in the course of judicial proceedings, criminal or civil law enforcement inquiries, investigations, or proceedings, or agency proceedings required by statute or regulation to be conducted on the record, shall include only such attempts to influence or persuade with reference to formulating, adopting, or changing the domestic or foreign policies of the United States or with reference to the political or public interests, policies, or relations of a government of a foreign country or a foreign political party; and

(b) If an attorney engaged in legal representation of a foreign principal before an agency of the U.S. Government is not otherwise required to disclose the identity of his principal as a matter of established agency procedure, he must make such disclosure, in conformity with this section of the Act, to each of the agency's personnel or officials before whom and at the time his legal representation is undertaken. The burden of establishing that the required disclosure was made shall fall upon the person claiming the exemption.

[Order No. 376–67, 32 FR 6362, Apr. 22, 1967, as amended by Order No. 463–71, 36 FR 12212, June 29, 1971; Order No. 2674–2003, 68 FR 33630, June 5, 2003]

§ 5.307 Exemption under 3(h) of the Act.

For the purpose of section 3(h) of the Act, the burden of establishing that registration under the Lobbying Disclosure Act of 1995, 2 U.S.C. 1601 *et seq.* (LDA), has been made shall fall upon the person claiming the exemption. The Department of Justice will accept as prima facie evidence of registration a duly executed registration statement filed pursuant to the LDA. In no case where a foreign government or foreign political party is the principal beneficiary will the exemption under 3(h) be recognized.

[Order No. 2674–2003, 68 FR 33631, June 5, 2003]

§ 5.400 Filing of informational materials.

(a) The informational materials required to be filed with the Attorney General under section 4(a) of the Act shall be filed with the Registration Unit no later than 48 hours after the beginning of the transmittal of the informational materials.

(b) Whenever informational materials have been filed pursuant to section 4(a) of the Act, an agent of a foreign principal shall not be required, in the event of further dissemination of

the same materials, to forward additional copies thereof to the Registration Unit.

(c) Unless specifically directed to do so by the Assistant Attorney General, a registrant is not required to file a copy of a motion picture which he disseminates on behalf of his foreign principal, so long as he files monthly reports on its dissemination. In each such case this registrant shall submit to the Registration Unit either a film strip showing the label required by section 4(b) of the Act or an affidavit certifying that the required label has been made a part of the film.

[Order No. 376–67, 32 FR 6362, Apr. 22, 1967, as amended by Order No. 523–73, 38 FR 18235, July 9, 1973; Order No. 568–74, 39 FR 18646, May 29, 1974; Order No. 2674–2003, 68 FR 33631, June 5, 2003]

§ 5.402 Labeling informational materials.

(a) Within the meaning of this part, informational materials shall be deemed labeled whenever they have been marked or stamped conspicuously at their beginning with a statement setting forth such information as is required under section 4(b) of the Act.

(b) Informational materials which are required to be labeled under section 4(b) of the Act and which are in the form of prints shall be marked or stamped conspicuously at the beginning of such materials with a statement in the language or languages used therein, setting forth such information as is required under section 4(b) of the Act.

(c) Informational materials required to be labeled under section 4(b) of the Act but which are not in the form of prints shall be accompanied by a statement setting forth such information as is required under section 4(b) of the Act.

(d) Informational materials that are televised or broadcast, or which are caused to be televised or broadcast, by an agent of a foreign principal, shall be introduced by a statement which is reasonably adapted to convey to the viewers or listeners thereof such information as is required under section 4(b) of the Act.

(e) An agent of a foreign principal who transmits or causes to be transmitted in the U.S. mails or by any means or instrumentality of interstate or foreign commerce a still or motion picture film which contains informational materials shall insert at the beginning of such film a statement which is reasonably adapted to convey to the viewers thereof such information as is required under section 4(b) of the Act.

(f) For the purpose of section 4(e) of the Act, the statement that must preface or accompany informational materials or a request for information shall be in writing.

[Order No. 376–67, 32 FR 6362, Apr. 22, 1967, as amended by Order No. 2674–2003, 68 FR 33631, June 5, 2003]

§ 5.500 Maintenance of books and records.

(a) A registrant shall keep and preserve in accordance with the provisions of section 5 of the Act the following books and records:

(1) All correspondence, memoranda, cables, telegrams, teletype messages, and other written communications to and from all foreign principals and all other persons, relating to the registrant's activities on behalf of, or in the interest of any of his foreign principals.

(2) All correspondence, memoranda, cables, telegrams, teletype messages, and other written communications to and from all persons, other than foreign principals, relating to the registrant's political activity, or relating to political activity on the part of any of the registrant's foreign principals.

(3) Original copies of all written contracts between the registrant and any of his foreign principals.

(4) Records containing the names and addresses of persons to whom informational materials have been transmitted.

(5) All bookkeeping and other financial records relating to the registrant's activities on behalf of any of his foreign principals, including canceled checks, bank statements, and records of income and disbursements, showing names and addresses of all persons who paid moneys to, or received moneys from, the registrant, the specific amounts so paid or received, and the date on which each item was paid or received.

(6) If the registrant is a corporation, partnership, association, or other combination of individuals, all minute books.

(7) Such books or records as will disclose the names and addresses of all employees and agents of the registrant, including persons no longer acting as such employees or agents.

(8) Such other books, records, and documents as are necessary properly to reflect the activities for which registration is required.

(b) The books and records listed in paragraph (a) of this section shall be kept and preserved in such manner as to render them readily accessible for inspection pursuant to section 5 of the Act.

(c) A registrant shall keep and preserve the books and records listed in paragraph (a) of this section for a period of 3 years following the termination of his registration under § 5.205.

(d) Upon good and sufficient cause shown in writing to the Assistant Attorney General, a registrant may be permitted to destroy books and records in support of the information furnished in an initial or supplemental statement which he filed 5 or more years prior to the date of his application to destroy.

[Order No. 376–67, 32 FR 6362, Apr. 22, 1967, as amended by Order No. 2674–2003, 68 FR 33631, June 5, 2003]

§ 5.501 Inspection of books and records.

Officials of the National Security Division and the Federal Bureau of Investigation are authorized under section 5 of the Act to inspect the books and records listed in § 5.500(a).

[Order No. 376–67, 32 FR 6362, Apr. 22, 1967, as amended by Order No. 523–73, 38 FR 18235, July 9, 1973; Order No. 2865–2007, 72 FR 10068, Mar. 7, 2007]

§ 5.600 Public examination of records.

Registration statements, informational materials, Dissemination Reports, and copies of political propaganda filed under section 4(a) of the Act, shall be available for public examination at the Registration Unit on official business days, during the posted hours of operation.

[Order No. 376–67, 32 FR 6362, Apr. 22, 1967, as amended by Order No. 2674–2003, 68 FR 33631, June 5, 2003]

§ 5.601 Copies of records and information available.

(a) Copies of registration statements and supplements, amendments, exhibits thereto, informational materials, dissemination reports, and copies of political propaganda and other materials contained in the public files, may be obtained from the Registration Unit upon payment of a fee as prescribed in § 5.5.

(b) Information as to the fee to be charged for copies of registration statements and supplements, amendments, exhibits thereto, informational materials, dissemination reports, and copies of political propaganda and other materials contained in the public files, or research into and information therefrom, and the time required for the preparation of such documents or information may be obtained upon request to the Registration Unit. Fee rates are established in § 5.5.

(c) The Registration Unit may, in its discretion, conduct computer searches of records through the use of existing programming upon written request. Information as to the fee for the conduct of such computer searches, and the time required to conduct such computer searches, may be obtained upon request to the Registration Unit. A written request for computer searches of records shall include a deposit in the amount specified by the Registration Unit, which shall be the Registration Unit's estimate of the actual fees. The Registration Unit is not required to alter or develop programming to conduct a search. Fee rates are established in § 5.5.

[Order No. 1757–93, 58 FR 37420, July 12, 1993, as amended by Order No. 2674–2003, 68 FR 33631, June 5, 2003]

§ 5.800 Ten-day filing requirement.

The 10-day filing requirement provided by section 8(g) of the Act shall be deemed satisfied if the amendment to the registration statement is deposited in the U.S. mails no later than the 10th day of the period.

§ 5.801 Activity beyond 10-day period.

A registrant who has within the 10-day period filed an amendment to his registration statement pursuant to a Notice of Deficiency given under section 8(g) of the Act may continue to act as an agent of a foreign principal beyond this period unless he receives a Notice of Noncompliance from the Registration Unit.

[Order No. 376–67, 32 FR 6362, Apr. 22, 1967, as amended by Order No. 523–73, 38 FR 18235, July 9, 1973]

§ 5.1101 Copies of the Report of the Attorney General.

Copies of the Report of the Attorney General to the Congress on the Administration of the Foreign Agents Registration Act of 1938, as amended, shall be sold to the public by the Registration Unit, as available, at a charge not less than the actual cost of production and distribution.

[Order No. 1757–93, 58 FR 37420, July 12, 1993]

PART 6—TRAFFIC IN CONTRABAND ARTICLES IN FEDERAL PENAL AND CORRECTIONAL INSTITUTIONS

AUTHORITY: Pub. L. 772, 80th Cong.; 18 U.S.C. 1791.

§ 6.1 Consent of warden or superintendent required.

The introduction or attempt to introduce into or upon the grounds of any Federal penal or correctional institution or the taking or attempt to take or send therefrom anything whatsoever without the knowledge and consent of the warden or superintendent of such Federal penal or correctional institution is prohibited.

CROSS REFERENCE: For Organization Statement, Bureau of Prisons, see subpart Q of part 0 of this chapter.

[13 FR 5660, Sept. 30, 1948]

PART 7—REWARDS FOR CAPTURE OF ESCAPED FEDERAL PRISONERS

Sec.
7.1 Standing offer of reward.
7.2 Amount of reward.
7.3 Eligibility for reward.
7.4 Procedure for claiming reward.
7.5 Certification.

AUTHORITY: 5 U.S.C. 301; 18 U.S.C. 3059.

CROSS REFERENCE: For Organization Statement, Bureau of Prisons, see subpart Q of part 0 of this chapter.

SOURCE: 25 FR 2420, Mar. 23, 1960, unless otherwise noted.

§ 7.1 Standing offer of reward.

A standing offer of reward is made for the capture, or for assisting in, or furnishing information leading to, the capture, of an escaped Federal prisoner, in accordance with the conditions stated in this part.

§ 7.2 Amount of reward.

Within the discretion of the Warden or U.S. Marshal concerned, a reward not in excess of $200 may be granted for each capture of a prisoner and to more than one claimant, as determined applicable and appropriate. The Director of the Bureau of Prisons may in exceptional circumstances, as determined by him, grant rewards in excess of $200. Bodily harm, damage, violence, intimidation, terrorizing, risks, etc., will be considered in determining the appropriate amount of reward.

§ 7.3 Eligibility for reward.

A reward may be paid to any person, except an official or employee of the Department of Justice or a law-enforcement officer of the U.S. Government, who personally captures and surrenders an escaped Federal prisoner to proper officials, or who assists in the capture, of an escaped Federal prisoner.

§ 7.4 Procedure for claiming reward.

A person claiming a reward under this part shall present his claim, within six months from the date of the capture, in the form of a letter to the Warden or U.S. Marshal concerned. The letter shall state fully the facts and circumstances on which the claim is based, and shall include the name of each escapee captured and the time and place of the capture, and details as to how the arrest was made by the claimant or as to how assistance was rendered to others who made the arrest.

§7.5 Certification.

The claim letter required under §7.4 shall contain the following certification immediately proceeding the signature of the claimant:

I am not an officer or employee of the Department of Justice or a law-enforcement officer of the United States Government.

PART 8—FBI FORFEITURE AUTHORITY FOR CERTAIN STATUTES

Sec.
8.1 Definition.
8.2 Designation of officials having seizure authority.
8.3 Designation of the investigative bureau having administrative forfeiture authority; claims for awards, offers in compromise and matters relating to bonds.
8.4 Custody of seized property, inventory and receipt.
8.5 Appraisement of property subject to forfeiture.
8.6 Quick-release authority.
8.7 Judicial forfeiture.
8.8 Advertisement and declaration of forfeiture.
8.9 Disposition of forfeited property.
8.10 Remission or mitigation of forfeiture.

AUTHORITY: 5 U.S.C. 301; 28 U.S.C. 509, 510.

SOURCE: Order No. 1128–86, 51 FR 8818, Mar. 14, 1986, unless otherwise noted.

§8.1 Definition.

For the purpose of this part, the term *statutes* shall include the following statutes unless otherwise noted in this part: Interstate and Foreign Commerce—Gambling Devices—Transportation Prohibited, Jan. 2, 1951, ch. 1194 section 7, 64 Stat. 1135 (codified at 15 U.S.C. 1177, commonly referred to as Transportation of Gambling Devices); Organized Crime Control Act of 1970, Public Law 91–452, title VIII, part C, section 803(a), 84 Stat. 937 (1970) (codified at 18 U.S.C. 1955, commonly referred to as Illegal Gambling Businesses); Copyrights Act, Public Law 94–553, title I, section 101, 90 Stat. 2768 (1976) (codified at 17 U.S.C. 509); Motor Vehicle Theft Law Enforcement Act of 1984, Public Law 98–547, title II, section 201, 98 Stat. 2754 (1984) (codified at 18 U.S.C. 512); Crimes and Criminal Procedure, June 25, 1948, ch. 645, section 1, 62 Stat. 786 (codified at 18 U.S.C. 1762, commonly referred to as Prison-Made Goods); Child Protection Act of 1984, Public Law 98–292, section 6, 98 Stat. 205 (1984) (codified at 18 U.S.C. 2254); Omnibus Crime Control and Safe Streets Act of 1968, Public Law 90–351, title III, section 802, 82 Stat. 215 (1968) (codified at 18 U.S.C. 2513, commonly referred to as Wire Interception and Interception of Oral Communications); Seizure of Arms and Other Articles Intended for Export, June 15, 1917, ch. 30, title VI section 1, 40 Stat, 223; June 17, 1930, ch. 497, title IV, 523, 46 Stat. 740; Aug. 13, 1953, ch. 434, section 1, 67 Stat. 577 (codified at 22 U.S.C. 401, commonly referred to as Illegal Exportation of War Materials) ; Anti-Drug Abuse Act of 1986, Public Law 99–570, sec. 1351–1367 (1986) (codified at 18 U.S.C. 981, commonly referred to as Money Laundering Control Act of 1986).

[Order No. 1128–86, 51 FR 8818, Mar. 14, 1986, as amended by Order No. 1197–87, 52 FR 24448, July 1, 1987]

§8.2 Designation of officials having seizure authority.

The Director, Associate Director, Assistants to the Director, Assistant Directors, inspectors, and Agents of the Federal Bureau of Investigation are authorized to seize such property as may be subject to seizure pursuant to statutes identified in §8.1.

§8.3 Designation of the investigative bureau having administrative forfeiture authority; claims for awards, offers in compromise and matters relating to bonds.

The Federal Bureau of Investigation is, in accordance with the statutes identified in §8.1, authorized and designated as the investigative bureau to perform various duties with respect to forfeiture which are comparable to the duties performed by collectors of customs or other persons with respect to the seizure and forfeiture of vessels, vehicles, merchandise, and baggage under the customs' laws. The Director of the Federal Bureau of Investigation or his designee is designated as the officer authorized to take final action under these statutes on claims for award of compensation to informers, offers in compromise, and matters relating to bonds or other security.

§ 8.4 Custody of seized property, inventory and receipt.

All property seized pursuant to the statutes identified in § 8.1 shall be turned over to the U.S. Marshals Service when not held as evidence or to be placed into official use following forfeiture. An inventory shall be prepared by the Federal Bureau of Investigation of the seized property and a receipt given for it to the person from whom it was seized at the time of seizure or as soon thereafter as practical.

§ 8.5 Appraisement of property subject to forfeiture.

Seized property shall be appraised. The appraisement shall be the function of the Special Agent in Charge, Federal Bureau of Investigation or his designee having custody of the property. The value of an article seized shall be the price at which it or a similar article is fairly offered for sale at the time and place of appraisement.

§ 8.6 Quick-release authority.

Where the forfeiture proceedings are administrative, the Special Agent in Charge, prior to forfeiture, is authorized to release property seized for forfeiture. The property can be quick-released when the Special Agent in Charge deems that there is an innocent owner having an immediate right to possession of the property or when the release would be in the best interest of justice and the Government.

§ 8.7 Judicial forfeiture.

If the appraised value exceeds the monetary amount set forth in title 19, United States Code, section 1607, or a claim and satisfactory bond have been received either for property appraised at that amount or less, or for seized merchandise which is any monetary instrument within the meaning of section 5312(a)(3) of title 31 of the United States Code, the Special Agent in Charge of the FBI field office that seized the property shall transmit the claim and bond to the U.S. Attorney for the judicial district in which the seizure was made for the purpose of instituting judicial forfeiture proceedings. Also transmitted with the claim and bond will be a description of the property and a complete statement of the facts and circumstances leading to the seizure of the property.

[Order No. 1476–91, 56 FR 8685, Mar. 1, 1991]

§ 8.8 Advertisement and declaration of forfeiture.

(a) The notice required by customs laws, section 607, Tariff Act of 1930, as amended (19 U.S.C. 1607), of seizure and intention to forfeit and sell or otherwise dispose of property seized pursuant to the statutes identified in § 8.1, shall describe the property seized, state the date seized, cause, and place of seizure; and state that any person desiring to claim the property must file with the Special Agent in Charge, Federal Bureau of Investigation (FBI) within 20 days from the date of the first publication of the notice a claim to such property and a bond.

(b) The bond amount shall be $5,000 or ten percent of the value of the claimed property whichever is lower, but not less than $250. The bond posted to cover costs may be in cash, certified check, or satisfactory sureties. When the claim and bond are received by the Special Agent in Charge, he shall, after finding the documents in proper form and the sureties satisfactory, transmit the documents, together with a description of the property and a complete statement of the facts and circumstances surrounding the seizure, to the U.S. Attorney for the judicial district in which the seizure was made for purpose of proceeding to forfeiture of the property in a manner prescribed by law. If the documents are not in satisfactory condition when first received, a reasonable time for correction may be allowed. If correction is not made within a reasonable time, the documents may be treated as nugatory, and the administrative forfeiture shall proceed as though they had not been tendered. The filing of the claim and the posting of the bond does not entitle the claimant to possession of the property, however, it does stop the administrative forfeiture proceeding.

(c) The notice for administrative forfeiture proceedings shall be published once each week for at least three successive weeks in a newspaper of general circulation in the judicial district in which the property was seized. If a

claim is not made within the time period, the FBI Property Management Officer shall declare the property forfeited.

[Order No. 1128–86, 51 FR 8818, Mar. 14, 1986, as amended by Order No. 1197–87, 52 FR 24448, July 1, 1987; Order No. 1476–91, 56 FR 8687, Mar. 1, 1991]

§8.9 Disposition of forfeited property.

(a) If the laws of a state in which an article of forfeited property is located prohibit the sale of such property or if the U.S. Marshals Service is of the opinion that it would be more advantageous to sell the forfeited property in another district, the property may be moved to and sold in such other district as the U.S. Marshals Service may direct.

(b) If, after the administrative forfeiture of property is completed, it appears that the proceeds of sale will not be sufficient to pay the costs of sale or the proceeds will be insignificant in relation to the expenses involved in the forfeiture, the U.S. Marshals Service may order the destruction of the property. Similarly, property forfeited under a decree of a court may be destroyed in accordance with section 611, Tariff Act of 1930 (19 U.S.C. 1611). Also, if the sale or use of any article is prohibited under any law of the United States or the state where it is stored, the U.S. Marshals Service may order it destroyed or cause alteration of the property into an article that is not prohibited.

(c) If arms and munitions are forfeited pursuant to 22 U.S.C. 401(c), the Secretary of Defense should be contacted to determine if he desires this property.

§8.10 Remission or mitigation of forfeiture.

(a) Any person claiming a legal or equitable interest in any property which has been forfeited pursuant to statutes identified in §8.1, may file, in accordance with the provisions of 28 CFR part 9, a petition for remission or mitigation of the forfeiture or a petition for restoration of the proceeds of sale or for value of the property placed in official use. If the foreiture proceedings are administrative, the petition shall be addressed to the Director of the FBI and shall be filed in triplicate with the Special Agent in Charge of the FBI field office that seized the property. It must be executed and sworn to by the person alleging interest in the property. If the forfeiture proceedings are judicial, the petition shall be addressed to the Attorney General of the United States and filed in triplicate with the Special Agent in Charge of the FBI field office that seized the property. The petition for a judicial forfeiture shall be sworn to by the petitioner, or by his or her counsel upon information and belief.

(b) The petition shall include the following:

(1) A complete description of the property, including model and serial numbers, if any, and the date and place of seizure;

(2) The petitioner's interest in the property, which shall be supported by bills of sale, contracts, mortgages, or other satisfactory documentary evidence; and,

(3) The facts and circumstances, established by satisfactory proof, relied upon by the petitioner to justify remission or mitigation of the forfeiture. For further information regarding the content of a petition, see 28 CFR 9.5.

(c) Where the petition is for restoration of the proceeds of sale, or for value of the property placed in official use, it must be supported by satisfactory proof that the petitioner did not know of the seizure prior to the declaration of forfeiture and was in such circumstances as prevented petitioner from knowing of the same.

(d) A petition for remission or mitigation of forfeiture should be filed within 30 days of the receipt of the notice of seizure. Once forfeited property is disposed of, a petition for remission or mitigation of forfeiture will no longer be accepted. A petition for restoration of proceeds of sale or for value of the property placed in official use must be filed within 90 days of the sale of the property, or within 90 days of the date the property is placed in official use.

(e) Upon receipt of a petition, an appropriate investigation shall be conducted by the FBI. No hearing shall be held. For administrative forfeitures,

the petition and the results of the petition investigation shall be forwarded to the Legal Counsel Division, FBI. Final decisions on petitions for property forfeited administratively shall be made by the Assistant Director, Legal Counsel, FBI or his designee within the Legal Counsel Division, FBI. For judicial forfeitures, the petition and the results of the petition investigation shall be forwarded to the U.S. Attorney who prosecuted the property. The U.S. Attorney shall forward the petition and the results of the investigation together with a recommendation as to allowance or denial of the petition to the Assistant Attorney General, Criminal Division. The matter shall be assigned to the Asset Forfeiture Office who shall either grant the petition by remission or mitigation of the forfeiture or shall deny it.

(f) A request for reconsideration of the denial of the petition for an administrative forfeiture must be submitted within 10 days from receipt of the letter denying the petition. Such request shall be addressed to the Director of the FBI for referral to the FBI Legal Counsel Division and shall be based on evidence recently developed or not previously considered. Only one request for reconsideration of a denial of a petition shall be considered. For further information regarding petitions see 28 CFR part 9.

PART 9—REGULATIONS GOVERNING THE REMISSION OR MITIGATION OF CIVIL AND CRIMINAL FORFEITURES

Sec.
9.1 Authority, purpose, and scope.
9.2 Definitions.
9.3 Petitions in administrative forfeiture cases.
9.4 Petitions in judicial forfeiture cases.
9.5 Criteria governing administrative and judicial remission and mitigation.
9.6 Special rules for specific petitioners.
9.7 Terms and conditions of remission and mitigation.
9.8 Provisions applicable to victims.
9.9 Miscellaneous provisions.

AUTHORITY: 28 U.S.C. 509, 510, 515–518, 524; 8 U.S.C. 1324; 15 U.S.C. 1177; 17 U.S.C. 509; 18 U.S.C. 512, 981, 982, 1467, 1955, 1963, 2253, 2254, 2513; 19 U.S.C. 1613, 1618; 21 U.S.C. 853, 881; 22 U.S.C. 401.

SOURCE: Order No. 2064–96, 62 FR 316, Jan. 3, 1997, unless otherwise noted.

§ 9.1 Authority, purpose, and scope.

(a) *Purpose*. This part sets forth the procedures for agency officials to follow when considering remission or mitigation of administrative forfeitures under the jurisdiction of the agency, and civil judicial and criminal judicial forfeitures under the jurisdiction of the Criminal Division. The purpose of the regulations in this part is to provide a basis for ameliorating the effects of forfeiture through the partial or total remission of forfeiture for individuals who have an interest in the forfeited property but who did not participate in, or have knowledge of, the conduct that resulted in the property being subject to forfeiture and, where required, took all reasonable steps under the circumstances to ensure that such property would not be used, acquired, or disposed of contrary to law. Additionally, the regulations provide for partial or total mitigation of the forfeiture and imposition of alternative conditions in appropriate circumstances.

(b) *Authority to grant remission and mitigation*. (1) Remission and mitigation functions in administrative forfeitures are performed by the agency seizing the property. Within the Federal Bureau of Investigation, authority to grant remission and mitigation is delegated to the Forfeiture Counsel, who is the Unit Chief, Legal Forfeiture Unit, Office of the General Counsel; within the Drug Enforcement Administration, authority to grant remission and mitigation is delegated to the Forfeiture Counsel, Office of Chief Counsel; within the Bureau of Alcohol, Tobacco, Firearms, and Explosives, authority to grant remission and mitigation is delegated to the Director of the Bureau of Alcohol, Tobacco, Firearms, and Explosives; and within the Immigration and Naturalization Service, authority to grant remission and mitigation is delegated to the INS Regional Directors.

(2) Remission and mitigation functions in judicial cases are performed by the Criminal Division of the Department of Justice. Within the Criminal Division, authority to grant remission

and mitigation is delegated to the Chief, Asset Forfeiture and Money Laundering Section, Criminal Division.

(3) The powers and responsibilities delegated by these regulations in this part may be redelegated to attorneys or managers working under the supervision of the designated officials.

(c) The time periods and internal requirements established in this part are designed to guide the orderly administration of the remission and mitigation process and are not intended to create rights or entitlements in favor of individuals seeking remission or mitigation. The regulations will apply to all decisions on petitions for remission or mitigation made on or after February 3, 1997. The regulations will apply to decisions on requests for reconsideration of a denial of a petition under §§9.3(j) and 9.4(k) only if the initial decision on the petition was made under the provisions of this part effective on February 3, 1997.

(d) This part governs any petition for remission filed with the Attorney General and supersedes any Department of Justice regulation governing petitions for remission, to the extent such regulation is inconsistent with this part. In particular, this part supersedes the provisions of 21 CFR 1316.79 and 1316.80, which contain remission and mitigation procedures for property seized for narcotics violations. The provisions of 8 CFR 274.13 through 274.19 and 28 CFR 8.10, which concern non-drug related forfeitures, are also superseded by this part where those regulations relate to remission and mitigation.

[Order No. 2064–96, 62 FR 316, Jan. 3, 1997, as amended by Order No. 2650–2003, 68 FR 4928, Jan. 31, 2003]

§9.2 Definitions.

As used in this part:

(a) The term *administrative forfeiture* means the process by which property may be forfeited by an investigative agency rather than through judicial proceedings.

(b) The term *appraised value* means the estimated market value of an asset at the time and place of seizure if such or similar property was freely offered for sale between a willing seller and a willing buyer.

(c) The term *Assets Forfeiture Fund* means the Department of Justice Assets Forfeiture Fund or Department of the Treasury Asset Forfeiture Fund, depending upon the identity of the seizing agency.

(d) The term *Attorney General* means the Attorney General of the United States or his or her designee.

(e) The term *beneficial owner* means a person with actual use of, as well as an interest in, the property subject to forfeiture.

(f) The terms *Chief, Asset Forfeiture and Money Laundering Section*, and *Chief*, refer to the Chief of the Asset Forfeiture and Money Laundering Section, Criminal Division, United States Department of Justice.

(g) The term *general creditor* means one whose claim or debt is not secured by a specific right to obtain satisfaction against the particular property subject to forfeiture.

(h) The term *judgment creditor* means one who has obtained a judgment against the debtor but has not yet received full satisfaction of the judgment.

(i) The term *judicial forfeiture* means either a civil or a criminal proceeding in a United States District Court that may result in a final judgment and order of forfeiture.

(j) The term *lienholder* means a creditor whose claim or debt is secured by a specific right to obtain satisfaction against the particular property subject to forfeiture. A lien creditor qualifies as a lienholder if the lien:

(1) Was established by operation of law or contract;

(2) Was created as a result of an exchange of money, goods, or services; and

(3) Is perfected against the specific property forfeited for which remission or mitigation is sought (*e.g.*, a real estate mortgage; a mechanic's lien).

(k) The term *net equity* means the amount of a lienholder's monetary interest in property subject to forfeiture. Net equity shall be computed by determining the amount of unpaid principal and unpaid interest at the time of seizure, and by adding to that sum unpaid interest calculated from the date of seizure through the last full month prior to the date of the decision on the

petition. Where a rate of interest is set forth in a security agreement, the rate of interest to be used in this computation will be the annual percentage rate so specified in the security agreement that is the basis of the lienholder's interest. In this computation, however, there shall be no allowances for attorneys' fees, accelerated or enhanced interest charges, amounts set by contract as damages, unearned extended warranty fees, insurance, service contract charges incurred after the date of seizure, allowances for dealer's reserve, or any other similar charges.

(l) The term *owner* means the person in whom primary title is vested or whose interest is manifested by the actual and beneficial use of the property, even though the title is vested in another. A victim of an offense, as defined in paragraph (v) of this section, may also be an owner if he or she has a present legally cognizable ownership interest in the property forfeited. A nominal owner of property will not be treated as its true owner if he or she is not its beneficial owner.

(m) The term *person* means an individual, partnership, corporation, joint business enterprise, estate, or other legal entity capable of owning property.

(n) The term *petition* means a petition for remission or mitigation of forfeiture under the regulations in this part. This definition includes a petition for restoration of the proceeds of sale of forfeited property and a petition for the value of forfeited property placed into official use.

(o) The term *petitioner* means the person applying for remission, mitigation, restoration of the proceeds of sale, or for the appraised value of forfeited property, under the regulations in this part. A petitioner may be an owner as defined in §9.2(l), a lienholder as defined in §9.2(j), or a victim as defined in §9.2(v), subject to the limitations of §9.8.

(p) The term *property* means real or personal property of any kind capable of being owned or possessed.

(q) The term *record* means a series of arrests for related crimes, unless the arrestee was acquitted or the charges were dismissed for lack of evidence; a conviction for a related crime or completion of sentence within ten years of the acquisition of the property subject to forfeiture; or two convictions for a related crime at any time in the past.

(r) The term *related crime* as used in §9.2(q) and §9.6(e) means any crime similar in nature to that which gives rise to the seizure of property for forfeiture. For example, where property is seized for a violation of the federal laws relating to drugs, a related crime would be any offense involving a violation of the federal laws relating to drugs or the laws of any state or political subdivision thereof relating to drugs.

(s) The term *related offense* as used in §9.8 means:

(1) Any predicate offense charged in a Federal Racketeer Influenced and Corrupt Organizations Act (RICO) count for which forfeiture was ordered; or

(2) An offense committed as part of the same scheme or design, or pursuant to the same conspiracy, as was involved in the offense for which forfeiture was ordered.

(t) The term *Ruling Official* means any official to whom decision making authority has been delegated pursuant to §9.1(b).

(u) The term *seizing agency* means the federal agency that seized the property or adopted the seizure of another agency for federal forfeiture.

(v) The term *victim* means a person who has incurred a pecuniary loss as a direct result of the commission of the offense underlying a forfeiture. A drug user is not considered a victim of a drug trafficking offense under this definition. A victim does not include one who acquires a right to sue the perpetrator of the criminal offense for any loss by assignment, subrogation inheritance, or otherwise form the actual victim, unless that person has acquired an actual ownership interest in the forfeited property.

(w) The term *violator* means the person whose use or acquisition of the property in violation of the law subjected such property to seizure for forfeiture.

§ 9.3 Petitions in administrative forfeiture cases.

(a) *Notice of seizure*. The notice of seizure and intent to forfeit the property

shall advise any persons who may have a present ownership interest in the property to submit their petitions for remission or mitigation within thirty (30) days of the date they receive the notice in order to facilitate processing. Petitions shall be considered any time after notice until the forfeited property is placed into official use, sold, or otherwise disposed of according to law, except in cases involving petitions to restore the proceeds from the sale of forfeited property. A notice of seizure shall include the title of the seizing agency, the Ruling Official, the mailing and street address of the official to whom petitions should be sent, and an asset identifier number.

(b) *Persons who may file.* A petition for remission or mitigation must be filed by a petitioner as defined in §9.2(o) or as prescribed in §§9.9(g) and (h).

(c) *Contents of petition.* (1) All petitions must include the following information in clear and concise terms:

(i) The name, address, and social security or other taxpayer identification number of the person claiming an interest in the seized property who is seeking remission or mitigation;

(ii) The name of the seizing agency, the asset identifier number, and the date and place of seizure;

(iii) A complete description of the property, including make, model, and serial numbers, if any; and

(iv) A description of the petitioner's interest in the property as owner, lienholder, or otherwise, supported by original or certified bills of sale, contracts, deeds, mortgages, or other documentary evidence.

(2) Any factual recitation or documentation of any type in a petition must be supported by a sworn affidavit.

(d) *Releases.* In addition to the contents of the petition for remission or mitigation set forth in paragraph (c) of this section, upon request, the petitioner shall also furnish the agency with an instrument executed by the titled or registered owner and any other known claimant of an interest in the property releasing interest in such property.

(e) *Filing petition with agency.* (1) A petition for remission or mitigation subject to administrative forfeiture shall be addressed to the appropriate federal agency as follows:

(i) Drug Enforcement Administration, Office of Chief Counsel, Street Address: 700 Army Navy Drive, Arlington, VA 22202

Mailing Address: P.O. Box 28356, Washington, D.C. 20038.

(ii) Federal Bureau of Investigation, Special Agent in Charge, Field Office that seized the property.

(iii) Bureau of Alcohol, Tobacco, Firearms, and Explosives, Special Agent in Charge, Asset Forfeiture and Seized Property Branch, 650 Massachusetts Avenue, NW., Washington, DC 20226.

(iv) Immigration and Naturalization Service District Director, Chief Patrol Agent, or Regional Asset Forfeiture Office at location with jurisdiction over the forfeiture proceeding.

(2) The petition is to be sent to the official address provided in the notice of seizure and shall be sworn to by the petitioner or by the petitioner's attorney upon information and belief, supported by the client's sworn notice of representation pursuant to 28 U.S.C. 1746, as set out in §9.9(g). The Chief of the Asset Forfeiture and Money Laundering Section is delegated authority to amend the address of the official to whom petitions may be sent from time to time, as necessary, by publishing notice of the change of address in the FEDERAL REGISTER. Failure to publish a notice of change of address in the FEDERAL REGISTER shall not alter the authority of the Ruling Official to determine petitions for remission or mitigation nor the obligation of a petitioner to file a petition at the address provided in the notice of seizure. Failure to publish a notice of change of address in the FEDERAL REGISTER shall not be grounds for expanding the time for filing a petition for remission or mitigation under the regulations in this part.

(f) *Agency investigation.* Upon receipt of a petition, the seizing agency shall investigate the merits of the petition and prepare a written report containing the results of that investigation. This report shall be submitted to the Ruling Official for review and consideration.

(g) *Ruling*. Upon receipt of the petition and the agency report, the Ruling Official for the seizing agency shall review the petition and the report, and shall rule on the merits of the petition. No hearing shall be held.

(h) *Petitions granted*. If the Ruling Official grants a remission or mitigation of the forfeiture, a copy of the decision shall be mailed to the petitioner or, if represented by an attorney, to the petitioner's attorney. A copy shall also be sent to the United States Marshals Service or other property custodian. The written decision shall include the terms and conditions, if any, upon which the remission or mitigation is granted and the procedures the petitioner must follow to obtain release of the property or the monetary interest therein.

(i) *Petitions denied*. If the Ruling Official denies a petition, a copy of the decision shall be mailed to the petitioner or, if represented by an attorney, to the petitioner's attorney of record. A copy of the decision shall also be sent to the United States Marshals Service or other property custodian. The decision shall specify the reason that the petition was denied. The decision shall advise the petitioner that a request for reconsideration of the denial of the petition may be submitted to the Ruling Official in accordance with paragraph (j) of this section.

(j) *Request for reconsideration*. (1) A request for reconsideration of the denial of the petition shall be considered if:

(i) It is postmarked or received by the office of the Ruling Official within ten (10) days from the receipt of the notice of denial of the petition by the petitioner; and

(ii) The request is based on information or evidence not previously considered that is material to the basis for the denial or presents a basis clearly demonstrating that the denial was erroneous.

(2) In no event shall a request for reconsideration be decided by the same Ruling Official who ruled on the original petition.

(3) Only one request for reconsideration of a denial of a petition shall be considered.

(k) *Restoration of proceeds from sale*. (1) A petition for restoration of the proceeds from the sale of forfeited property, or for the appraised value of forfeited property when the forfeited property has been retained by or delivered to a government agency for official use, may be submitted by an owner or leinholder in cases in which the petitioner:

(i) Did not know of the seizure prior to the entry of a declaration of forfeiture; and

(ii) Could not reasonably have known of the seizure prior to the entry of a declaration of forfeiture.

(2) Such a petition shall be submitted pursuant to paragraphs (b) through (e) of this section within ninety (90) days of the date the property is sold or otherwise disposed of.

[Order No. 2064–96, 62 FR 316, Jan. 3, 1997, as amended by Order No. 2650–2003, 68 FR 4928, Jan. 31, 2003]

§ 9.4 Petitions in judicial forfeiture cases.

(a) *Notice of seizure*. The notice of seizure and intent to forfeit the property shall advise any persons who may have a present ownership interest in the property to submit their petitions for remission or mitigation within thirty (30) days of the date they receive the notice in order to facilitate processing. Petitions shall be considered any time after notice until such time as the forfeited property is placed in official use, sold, or otherwise disposed of according to law, except in cases involving petitions to restore property. A notice of seizure shall include the title of the Ruling Official and the mailing and street address of the official to whom petitions should be sent, the name of the agency seizing the property, an asset identifier number, and the district court docket number.

(b) *Persons who may file*. A petition for remission or mitigation must be filed by a petitioner as defined in § 9.2(o) or as prescribed in §§ 9.9 (g) and (h).

(c) *Contents of petition*. (1) All petitions must include the following information in clear and concise terms:

(i) The name, address, and social security or other taxpayer identification number of the person claiming an interest in the seized property who is seeking remission or mitigation;

(ii) The name of the seizing agency, the asset identifier number, and the date and place of seizure;

(iii) The district court docket number;

(iv) A complete description of the property, including the address or legal description of real property, and make, model, and serial numbers of personal property, if any; and

(v) A description of the petitioner's interest in the property as owner, lienholder, or otherwise, supported by original or certified bills of sale, contracts, mortgages, deeds, or other documentary evidence.

(2) Any factual recitation or documentation of any type in a petition must be supported by a sworn affidavit.

(d) *Releases*. In addition to the content of the petition for remission or mitigation set forth in paragraph (c) of this section, the petitioner, upon request, also shall furnish the agency with an instrument executed by the titled or registered owner and any other known claimant of an interest in the property releasing the interest in such property.

(e) *Filing petition with Department of Justice*. A petition for remission or mitigation of a judicial forfeiture shall be addressed to the Attorney General; shall be sworn to by the petitioner or by the petitioner's attorney upon information and belief, supported by the client's sworn notice of representation pursuant to 28 U.S.C. 1746, as set forth in §9.9(g); and shall be submitted to the United States Attorney for the district in which the judicial forfeiture proceedings are brought. A petitioner also shall submit a copy of the petition to the seizing agency in the judicial district in which the seizure occurred as specified in the notice of seizure, except in Drug Enforcement Administration cases, where the copy shall be submitted to Drug Enforcement Administration Headquarters, Office of Chief Counsel, P.O. Box 28356, Washington, D.C. 20038, or 700 Army Navy Drive, Arlington, VA 22202, and except in Bureau of Alcohol, Tobacco, Firearms, and Explosives cases, where the copy shall be submitted to the Special Agent in Charge, Asset Forfeiture and Seized Property Branch, Bureau of Alcohol, Tobacco, Firearms, and Explosives, 650 Massachusetts Avenue, NW., Washington, DC 20226.

(f) *Agency investigation and recommendation; United States Attorney's recommendation*. Upon receipt of a petition, the United States Attorney shall direct the seizing agency to investigate the merits of the petition based on the information provided by the petitioner and the totality of the agency's investigation of the underlying basis for forfeiture. The agency shall submit to the United States Attorney a report of its investigation and its recommendation on whether the petition should be granted or denied. Upon receipt of the agency's report and recommendation, the United States Attorney shall forward to the Chief, Asset Forfeiture and Money Laundering Section, the petition, the seizing agency's report and recommendation, and the United States Attorney's recommendation on whether the petition should be granted or denied.

(g) *Ruling*. The Chief shall rule on the petition. No hearing shall be held. The Chief shall not rule on any petition in any case in which similar petition has been administratively denied by the seizing agency prior to the referral of the case to the United States Attorney for the institution of forfeiture proceedings.

(h) *Petitions under Internal Revenue Service liquor laws*. The Chief shall accept and consider petitions submitted in judicial forfeiture proceedings under the Internal Revenue Service liquor laws only prior to the time a decree of forfeiture is entered. Thereafter, district courts have exclusive jurisdiction.

(i) *Petitions granted*. If the Chief grants a remission or mitigates the forfeiture, the Chief shall mail a copy of the decision to the petitioner or, if represented by an attorney, to the petitioner's attorney, the appropriate United States Attorney, the United States Marshals Service or other property custodian, and the appropriate seizing agency. The written decision shall include the terms and conditions, if any, upon which the remission or mitigation is granted and the procedures the petitioner must follow to obtain release of the property or the monetary interest therein. The Chief

shall advise the petitioner or the petitioner's attorney to consult with the United States Attorney as to such terms and conditions. The United States Attorney shall confer with the seizing agency regarding the release and shall coordinate disposition of the property with that office and the United States Marshals Service or other property custodian.

(j) *Petitions denied.* If the Chief denies a petition, a copy of that decision shall be mailed to the petitioner, or if represented by an attorney, to the petitioner's attorney of record, to the appropriate United States Attorney, the United States Marshals Service or other property custodian, and to the appropriate seizing agency. The decision shall specify the reason that the petition was denied. The decision shall advise the petitioner that a request for reconsideration of the denial of the petition may be submitted to the Chief at the address provided in the decision, in accordance with paragraph (k) of this section.

(k) *Request for reconsideration.* (1) A request for reconsideration of the denial shall be considered if:

(i) It is postmarked or received by the Asset Forfeiture and Money Laundering Section at the address contained in the decision denying the petition within ten (10) days from the receipt of the notice of denial of the petition by the petitioner; and

(ii) The request is based on information or evidence not previously considered that is material to the basis for the denial or presents a basis clearly demonstrating that the denial was erroneous. A copy of the request must be received by the appropriate United States Attorney within ten (10) days of the receipt of the denial by the petitioner.

(2) In no event shall a request for reconsideration be decided by the Ruling Official who ruled on the original petition.

(3) Only one request for reconsideration of a denial of a petition shall be considered.

(4) Upon receipt of the request for reconsideration of the denial of a petition, disposition of the property will be delayed pending notice of the decision at the request of the Chief. If the United States Attorney does not receive a copy of the request for reconsideration within the prescribed period, the deposition of the property may proceed.

(l) *Restoration of proceeds from sale.* (1) A petition for restoration of the proceeds from the sale of forfeited property, or for the appraised value of forfeited property when the forfeited property has been retained by or delivered to a government agency for official use, may be submitted by an owner or lienholder in cases in which the petitioner:

(i) Did not know of the seizure prior to the entry of a final order of forfeiture; and

(ii) Could not reasonably have known of the seizure prior to the entry of a final order of forfeiture.

(2) Such a petition must be submitted pursuant to paragraphs (b) through (e) of this section within ninety (90) days of the date the property was sold or otherwise disposed of.

[Order No. 2064–96, 62 FR 316, Jan. 3, 1997, as amended by Order No. 2650–2003, 68 FR 4928, Jan. 31, 2003]

§ 9.5 Criteria governing administrative and judicial remission and mitigation.

(a) *Remission.* (1) The Ruling Official shall not grant remission of a forfeiture unless the petitioner establishes that:

(i) The petitioner has a valid, good faith, and legally cognizable interest in the seized property as owner or lienholder as defined in this part; and

(ii) The petitioner is innocent within the meaning of the innocent owner provisions of the applicable civil forfeiture statute, is a bona fide purchaser for value without cause to believe that the property was subject to forfeiture at the time of the purchase, or is one who held a legally cognizable interest in the seized property at the time of the violation underlying the forfeiture superior to that of the defendant within the meaning of the applicable criminal forfeiture statute, and is thereby entitled to recover his or her interest in the forfeited property by statute. (If the applicable civil forfeiture statute contains no innocent owner defense,

the innocent owner provisions applicable to 21 U.S.C. 881(a)(4) shall apply.) Unless otherwise provided by statute, in the case of petitioners who acquired their interest in the property after the time of the violation underlying the forfeiture, the question of whether the petitioner had knowledge of the violation shall be determined as of the point in time when the interest in the property was acquired.

(2) The knowledge and responsibilities of petitioner's representative, agent, or employee in paragraph (a)(1)(ii) of this section are imputed to the petitioner where the representative, agent, or employee was acting in the course of his or her employment and in furtherance of the petitioner's business.

(3) The petitioner has the burden of establishing the basis for granting a petition for remission or mitigation of forfeited property, a restoration of proceeds of sale or appraised value of forfeited property, or a reconsideration of a denial of such a petition. Failure to provide information or documents and to submit to interviews, as requested, may result in a denial of the petition.

(4) The Ruling Official shall presume a valid forfeiture and shall not consider whether the evidence is sufficient to support the forfeiture.

(5) Willful, materially-false statements or information, made or furnished by the petitioner in support of a petition for remission or mitigation of forfeited property, the restoration of proceeds or appraised value of forfeited property, or the reconsideration of a denial of any such petition, shall be grounds for denial of such petition and possible prosecution for the filing of false statements.

(b) *Mitigation*. (1) The Ruling Official may grant mitigation to a party not involved in the commission of the offense underlying forfeiture:

(i) Where the petitioner has not met the minimum conditions for remission, but the Ruling Official finds that some relief should be granted to avoid extreme hardship, and that return of the property combined with imposition of monetary and/or other conditions of mitigation in lieu of a complete forfeiture will promote the interest of justice and will not diminish the deterrent effect of the law. Extenuating circumstances justifying such a finding include those circumstances that reduce the responsibility of the petitioner for knowledge of the illegal activity, knowledge of the criminal record of a user of the property, or failure to take reasonable steps to prevent the illegal use or acquisition by another for some reason, such as a reasonable fear of reprisal; or

(ii) Where the minimum standards for remission have been satisfied but the overall circumstances are such that, in the opinion of the Ruling Official, complete relief is not warranted.

(2) The Ruling Officials may in his or her discretion grant mitigation to a party involved in the commission of the offense underlying the forfeiture where certain mitigating factors exist, including, but not limited to: the lack of a prior record or evidence of similar criminal conduct; if the violation does not include drug distribution, manufacturing, or importation, the fact that the violator has taken steps, such as drug treatment, to prevent further criminal conduct; the fact that the violation was minimal and was not part of a larger criminal scheme; the fact that the violator has cooperated with federal, state, or local investigations relating to the criminal conduct underlying the forfeiture; or the fact that complete forfeiture of an asset is not necessary to achieve the legitimate purposes of forfeiture.

(3) Mitigation may take the form of a monetary condition or the imposition of other conditions relating to the continued use of the property, and the return of the property, in addition to the imposition of any other costs that would be chargeable as a condition to remission. This monetary condition is considered as an item of cost payable by the petitioner, and shall be deposited into the Assets Forfeiture Fund as an amount realized from forfeiture in accordance with the applicable statute. If the petitioner fails to accept the Ruling Official's mitigation decision or any of its conditions, or fails to pay the monetary amount within twenty (20) days of the receipt of the decision, the property shall be sold, and the monetary amount imposed and other

costs chargeable as a condition to mitigation shall be subtracted from the proceeds of the sale before transmitting the remainder to the petitioner.

§ 9.6 Special rules for specific petitioners.

(a) *General creditors.* A general creditor may not be granted remission or mitigation of forfeiture unless he or she otherwise qualifies as petitioner under this part.

(b) *Rival claimants.* If the beneficial owner of the forfeited property and the owner of a security interest in the same property each files a petition, and if both petitions are found to be meritorious, the claims of the beneficial owner shall take precedence.

(c) *Voluntary bailments.* A petitioner who allows another to use his or her property without cost, and who is not in the business of lending money secured by property or of leasing or renting property for profit, shall be granted remission or mitigation of forfeiture in accordance with the provisions of § 9.5.

(d) *Lessors.* A person engaged in the business of leasing or renting real or personal property on a long-term basis with the right to sublease shall not be entitled to remission or mitigation of a forfeiture of such property unless the lessor can demonstrate compliance with all the requirements of § 9.5.

(e) *Straw owners.* A petition by any person who has acquired a property interest recognizable under this part, and who knew or had reason to believe that the interest was conveyed by the previous owner for the purpose of circumventing seizure, forfeiture, or the regulations in this part, shall be denied. A petition by a person who purchases or owns property for another who has a record for related crimes as defined in § 9.2(r), or a petition by a lienholder who knows or has reason to believe that the purchaser or owner of record is not the real purchaser or owner, shall be denied unless both the purchaser of record and the real purchaser or owner meet the requirements of § 9.5.

(f) *Judgment creditors.* (1) A judgment creditor will be recognized as a lienholder if:

(i) The judgment was duly recorded before the seizure of the property for forfeiture;

(ii) Under applicable state or other local law, the judgment constitutes a valid lien on the property that attached to it before the seizure of the property for forfeiture; and

(iii) The petitioner had no knowledge of the commission of any act or acts giving rise to the forfeiture at the time the judgment became a lien on the forfeited property.

(2) A judgment creditor will not be recognized as a lienholder if the property in question is not property of which the judgment debtor is entitled to claim ownership under applicable state or other local law (e.g., stolen property). A judgment creditor is entitled under this part to no more than the amount of the judgment, exclusive of any interest, costs, or other fees including attorney's fees associated with the action that led to the judgment or its collection.

(3) A judgment creditor's lien must be registered in the district where the property is located if the judgment was obtained outside the district.

§ 9.7 Terms and conditions of remission and mitigation.

(a) *Owners.* (1) An owner's interest in property that has been forfeited is represented by the property itself or by a monetary interest equivalent to that interest at the time of seizure. Whether the property or a monetary equivalent will be remitted to an owner shall be determined at the discretion of the Ruling Official.

(2) If a civil judicial forfeiture action against the property is pending, release of the property must await an appropriate court order.

(3) Where the government sells or disposes of the property prior to the grant of the remission, the owner shall receive the proceeds of that sale, less any costs incurred by the government in the sale. The Ruling Official, at his or her discretion, may waive the deduction of costs and expenses incident to the forfeiture.

(4) Where the owner does not comply with the conditions imposed upon release of the property by the Ruling Official, the property shall be sold. Following the sale, the proceeds shall be used to pay all costs of the forfeiture

and disposition of the property, in addition to any monetary conditions imposed. The remaining balance shall be paid to the owner.

(b) *Lienholders.* (1) When the forfeited property is to be retained for official use or transferred to a state or local law enforcement agency or foreign government pursuant to law, and remission or mitigation has been granted to a lienholder, the recipient of the property shall assure that:

(i) In the case of remission, the lien is satisfied as determined through the petition process; or

(ii) In the case of mitigation, an amount equal to the net equity, less any monetary conditions imposed, is paid to the lienholder prior to the release of the property to the recipient agency of foreign government.

(2) When the forfeited property is not retained for official use or transferred to another agency or foreign government pursuant to law, the lienholder shall be notified by the Ruling Official of the right to select either of the following alternatives:

(i) *Return of property.* The lienholder may obtain possession of the property after paying the United States, through the Ruling Official, the costs and expenses incident to the forfeiture, the amount, if any, by which the appraised value of the property exceeds the lienholder's net equity in the property, and any amount specified in the Ruling Official's decision as a condition to remit the property. The Ruling Official, at his or her discretion, may waive costs and expenses incident to the forfeiture. The Ruling Official shall forward a copy of the decision, a memorandum of disposition, and the original releases to the United States Marshals Service or other property custodian who shall thereafter release the property to the lienholder; or

(ii) *Sale of property and payment to lienholder.* Subject to the provisions of §9.9(a), upon sale of the property, the lienholder may receive the payment of a monetary amount up to the sum of the lienholder's net equity, less the expenses and costs incident to the forfeiture and sale of the property, and any other monetary conditions imposed. The Ruling Official, at his or her discretion, may waive costs and expenses incident to the forfeiture.

(3) If the lienholder does not notify the Ruling Official of the selection of one of the two options set forth in paragraph (b)(2) of this section within twenty (20) days of the receipt of notification, the Ruling Official shall direct the United States Marshal or other property custodian to sell the property and pay the lienholder an amount up to the net equity, less the costs and expenses incurred incident to the forfeiture and sale, and any monetary conditions imposed. In the event a lienholder subsequently receives a payment of any kind on the debt owed for which he or she received payment as a result of the granting of remission or mitigation, the lienholder shall reimburse the Assets Forfeiture Fund to the extent of the payment received.

(4) Where the lienholder does not comply with the conditions imposed upon the release of the property, the property shall be sold after forfeiture. From the proceeds of the sale, all costs incident to the forfeiture and sale shall first be deducted, and the balance up to the net equity, less any monetary conditions, shall be paid to the lienholder.

§9.8 Provisions applicable to victims.

The provisions of this section apply to victims of an offense underlying the forfeiture of property, or of a related offense, who do not have a present ownership interest in the forfeited property (or, in the case of multiple victims of an offense, who do not have a present ownership interest in the forfeited property that is clearly superior to that of other petitioner victims). The provisions of this section apply only with respect to property forfeited pursuant to statutes that explicitly authorize restoration or remission of forfeited property to victims. Victims who have a superior present legally cognizable ownership interest in forfeited property may file petitions, as other owners, subject to the regulations set forth in §9.7(a). The claims of such owner victims, like those of any other owners, shall have priority over the claims of any non-owner victims whose claims are recognized pursuant to this section.

(a) *Qualification to file.* A victim, as defined in § 9.2(v), of an offense that was the underlying basis for the criminal, civil, or administrative forfeiture of specific property, or a victim of a related offense, may be granted remission of the forfeiture of that property, if in addition to complying with the other applicable provisions of § 9.8, the victim satisfactorily demonstrates that:

(1) A pecuniary loss of a specific amount has been directly caused by the criminal offense, or related offense, that was the underlying basis for the forfeiture, and that the loss is supported by documentary evidence including invoices and receipts;

(2) The pecuniary loss is the direct result of the illegal acts and is not the result of otherwise lawful acts that were committed in the course of a criminal offense;

(3) The victim did not knowingly contribute to, participate in, benefit from, or act in a willfully blind manner towards the commission of the offense, or related offense, that was the underlying basis of the forfeiture;

(4) The victim has not in fact been compensated for the wrongful loss of the property by the perpetrator or others; and

(5) The victim does not have recourse reasonably available to other assets from which to obtain compensation for the wrongful loss of the property.

(b) *Pecuniary loss.* The amount of the pecuniary loss suffered by a victim for which remission may be granted is limited to the fair market value of the property of which the victim was deprived as of the date of the occurrence of the loss. No allowance shall be made for interest foregone or for collateral expenses incurred to recover lost property or to seek other recompense.

(c) *Torts.* A tort associated with illegal activity that formed the basis for the forfeiture shall not be a basis for remission, unless it constitutes the illegal activity itself, nor shall remission be granted for physical injuries to a petitioner or for damage to a petitioner's property.

(d) *Denial of petition.* In the exercise of his or her discretion, the Ruling Official may decline to grant remission where:

(1) There is substantial difficulty in calculating the pecuniary loss incurred by the victim or victims;

(2) The amount of the remission, if granted, would be small compared with the amount of expenses incurred by the government in determining whether to grant remission; or

(3) The total number of victims is large and the monetary amount of the remission so small as to make its granting impractical.

(e) *Pro rata basis.* In granting remission to multiple victims pursuant to this section, the Ruling Official should generally grant remission on a pro rata basis to recognized victims when petitions cannot be granted in full due to the limited value of the forfeited property. However, the Ruling Official may consider, among others, the following factors in establishing appropriate priorities in individual cases:

(1) The specificity and reliability of the evidence establishing a loss;

(2) The fact that a particular victim is suffering an extreme financial hardship;

(3) The fact that a particular victim has cooperated with the government in the investigation related to the forfeiture or to a related persecution or civil action; and

(4) In the case of petitions filed by multiple victims of related offenses, the fact that a particular victim is a victim of the offense underlying the forfeiture.

(f) *Reimbursement.* Any petitioner granted remission pursuant to this part shall reimburse the Assets Forfeiture Fund for the amount received to the extent the individual later receives compensation for the loss of the property from any other source. The petitioner shall surrender the reimbursement upon payment from any secondary source.

(g) *Claims of financial institution regulatory agencies.* In cases involving property forfeitable under 18 U.S.C. 981(a)(1)(C) or (a)(1)(D), the Ruling Official may decline to grant a petition filed by a petitioner in whole or in part due to the lack of sufficient forfeitable funds to satisfy both the petition and claims of the financial institution regulatory agencies pursuant to 18 U.S.C.

981(e)(3) or (7). Generally, claims of financial institution regulatory agencies pursuant to 18 U.S.C. 981(e)(3) or (7) shall take priority over claims of victims.

§9.9 Miscellaneous provisions.

(a) *Priority of payment.* Except where otherwise provided in this part, costs incurred by the United States Marshals Service and other agencies participating in the forfeiture that were incident to the forfeiture, sale, or other disposition of the property shall be deducted from the amount available for remission or mitigation. Such costs include, but are not limited to, court costs, storage costs, brokerage and other sales-related costs, the amount of any liens and associated costs paid by the government on the property, costs incurred in paying the ordinary and necessary expenses of a business seized for forfeiture, awards for information as authorized by statute, expenses of trustees or other assistants pursuant to paragraph (c) of this section, investigative or prosecutive costs specially incurred incident to the particular forfeiture, and costs incurred incident to the processing of the petition(s) for remission or mitigation. The remaining balance shall be available for remission or mitigation. The Ruling Official shall direct the distribution of the remaining balance in the following order or priority, except that the Ruling Official may exercise discretion in determining the priority between petitioners belonging to classes described in paragraphs (a)(3) and (4) of this section in exceptional circumstances:

(1) Owners;

(2) Lienholders;

(3) Federal financial institution regulatory agencies (pursuant to paragraph (e) of this section), not constituting owners or lienholders; and

(4) Victims not constituting owners or lienholders (pursuant to §9.8).

(b) *Sale or disposition of property prior to ruling.* If forfeited property has been sold or otherwise disposed of prior to a ruling, the Ruling Official may grant relief in the form of a monetary amount. The amount realized by the sale of the property is presumed to be the value of the property. Monetary relief shall not be greater than the appraised value of the property at the time of seizure and shall not exceed the amount realized from the sale or other disposition. The proceeds of the sale shall be distributed as follows:

(1) Payment of the government's expenses incurred incident to the forfeiture and sale, including court costs and storage charges, if any;

(2) Payment to the petitioner of an amount up to his or her interest in the property;

(3) Payment to the Assets Forfeiture Fund of all other costs and expenses incident to the forfeiture;

(4) In the case of victims, payment of any amount up to the amount of his or her loss; and

(5) Payment of the balance remaining, if any, to the Assets Forfeiture Fund.

(c) *Trustees and other assistants.* In the exercise of his or her discretion, the Ruling Official, with the approval of the Asset Forfeiture and Money Laundering Section, may use the services of a trustee, other government official, or appointed contractors to notify potential petitioners, process petitions, and make recommendations to the Ruling Official on the distribution of property to petitioners. The expense for such assistance shall be paid out of the forfeited funds.

(d) *Other agencies of the United States.* Where another agency of the United States is entitled to remission or mitigation of forfeited assets because of an interest that is recognizable under this part or is eligible for such transfer pursuant to 18 U.S.C. 981(e)(6), such agency shall request the transfer in writing, in addition to complying with any applicable provisions of §§9.3 through 9.5. The decision to make such transfer shall be made in writing by the Ruling Official.

(e) *Financial institution regulatory agencies.* A Ruling Official may direct the transfer of property under 18 U.S.C. 981(e) to certain federal financial institution regulatory agencies or an entity acting in their behalf, upon receipt of a written request, in lieu of ruling on a petition for remission or mitigation.

(f) *Transfers to foreign governments.* A Ruling Official may decline to grant remission to any petitioner other than

an owner or lienholder so that forfeited assets may be transferred to a foreign government pursuant to 18 U.S.C. 981(i)(1), 19 U.S.C. 1616a(c)(2), or 21 U.S.C. 881(e)(1)(E).

(g) *Filing by attorneys.* (1) A petition for remission or mitigation may be filed by a petitioner or by his or her attorney or legal guardian. If an attorney files on behalf of the petitioner, the petition must include a signed and sworn statement by the client-petitioner stating that:

(i) The attorney has the authority to represent the petitioner in this proceeding;

(ii) The petitioner has fully reviewed the petition; and

(iii) The petition is truthful and accurate in every respect.

(2) Verbal notification of representation is not acceptable. Responses and notification of rulings shall not be sent to an attorney claiming to represent a petitioner unless a written notice of representation is filed. No extensions of time shall be granted due to delays in submission of the notice of representation.

(h) *Consolidated petitions.* At the discretion of the Ruling Official in individual cases, a petition may be filed by one petitioner on behalf of other petitioners, provided the petitions are based on similar underlying facts, and the petitioner who files the petition has written authority to do so on behalf of the other petitioners. This authority must be either expressed in documents giving the petitioner the authority to file petitions for remission, or reasonably implied from documents giving the petitioner express authority to file claims or lawsuits related to the course of conduct in question on behalf of these petitioners. An insurer or an administrator of an employee benefit plan, for example, which itself has standing to file a petition as a ''victim'' within the meaning of §9.2(v), may also file a petition on behalf of its insured or plan beneficiaries for any claims they may have based on co-payments made to the perpetrator of the offense underlying the forfeiture or the perpetrator of a ''related offense'' within the meaning of §9.2(s), if the authority to file claims or lawsuits is contained in the document or documents establishing the plan. Where such a petition is filed, any amounts granted as a remission must be transferred to the other petitioners, not the party filing the petition; although, in his or her discretion, the Ruling Official may use the actual petitioner as an intermediary for transferring the amounts authorized as a remission to the other petitioners.

PART 10—REGISTRATION OF CERTAIN ORGANIZATIONS CARRYING ON ACTIVITIES WITHIN THE UNITED STATES

REGISTRATION STATEMENT

Sec.
10.1 Form of registration statement.
10.2 Language of registration statement.
10.3 Effect of acceptance of registration statement.
10.4 Date of filing.
10.5 Incorporation of papers previously filed.
10.6 Necessity for further registration.
10.7 Cessation of activity.

SUPPLEMENTAL REGISTRATION STATEMENT

10.8 Information to be kept current.
10.9 Requirements for supplemental registration statement.

INSPECTION OF REGISTRATION STATEMENT

10.10 Public inspection.

AUTHORITY: Pub. L. 772, 80th Cong.; 18 U.S.C. 2386.

CROSS REFERENCES: For regulations under the Foreign Agents Registration Act, see part 5 of this chapter.

For Organization Statement, Internal Security Section, see subpart K of part 0 of this chapter.

SOURCE: 6 FR 369, Jan. 15, 1941, unless otherwise noted.

REGISTRATION STATEMENT

§10.1 Form of registration statement.

Every organization required to submit a registration statement[1] to the Attorney General for filing in compliance with the terms of section 2 of the act approved October 17, 1940, entitled, ''An act to require the registration of

[1] Filed as a part of the original document. Copies may be obtained from the Department of Justice.

certain organizations carrying on activities within the United States, and for other purposes'' (Pub. L. 772, 80th Cong.; 18 U.S.C. 2386), and the rules and regulations issued pursuant thereto, shall submit such statement on such forms as are prescribed by the Attorney General. Every statement required to be filed with the Attorney General shall be subscribed under oath by all of the officers of the organization registering.

§ 10.2 Language of registration statement.

Registration statements must be in English if possible. If in a foreign language they must be accompanied by an English translation certified under oath by the translator, before a notary public or other person authorized by law to administer oaths for general purposes as a true and adequate translation. The statements, with the exception of signature, must be typewritten if practicable but will be accepted if written legibly in ink.

§ 10.3 Effect of acceptance of registration statement.

Acceptance by the Attorney General of a registration statement submitted for filing shall not necessarily signify a full compliance with the said act on the part of the registrant, and such acceptance shall not preclude the Attorney General from seeking such additional information as he deems necessary under the requirements of the said act, and shall not preclude prosecution as provided for in the said act for a false statement of a material fact, or the willful omission of a material fact required to be stated therein, or necessary to make the statements made not misleading.

§ 10.4 Date of filing.

The date on which a registration statement properly executed is accepted by the Attorney General for filing shall be considered the date of the filing of such registration statement pursuant to the said act. All statements must be filed not later than thirty days after January 15, 1941.

§ 10.5 Incorporation of papers previously filed.

Papers and documents already filed with the Attorney General pursuant to the said act and regulations issued pursuant thereto may be incorporated by reference in any registration statement subsequently submitted to the Attorney General for filing, provided such papers and documents are adequately identified in the registration statement in which they are incorporated by reference.

§ 10.6 Necessity for further registration.

The filing of a registration statement with the Attorney General as required by the act shall not operate to remove the necessity for filing a registration statement with the Attorney General as required by the act of June 8, 1938, as amended, entitled ''An act to require the registration of certain persons employed by agencies to disseminate propaganda in the United States and for other purposes'' (52 Stat. 631, 56 Stat. 248; 22 U.S.C. 611), or for filing a notification statement with the Secretary of State as required by the act of June 15, 1917 (40 Stat. 226).

[13 FR 8292, Dec. 24, 1948]

§ 10.7 Cessation of activity.

The chief officer or other officer of the registrant organization must notify the Attorney General promptly upon the cessation of the activity of the organization, its branches, chapters, or affiliates by virtue of which registration has been required pursuant to the act.

SUPPLEMENTAL REGISTRATION STATEMENT

§ 10.8 Information to be kept current.

A supplemental statement must be filed with the Attorney General within thirty days after the expiration of each period of six months succeeding the original filing of a registration statement. Each supplemental statement must contain information and documents as may be necessary to make information and documents previously filed accurate and current with respect to the preceding six months' period.

§ 10.9 Requirements for supplemental registration statement.

The rules and regulations in this part with respect to registration statements submitted to the Attorney General under section 2 of the said act shall apply with equal force and effect to supplemental registration statements required thereunder to be filed with the Attorney General.

INSPECTION OF REGISTRATION STATEMENT

§ 10.10 Public inspection.

Registration statements filed with the Attorney General pursuant to the said act shall be available for public inspection in the Department of Justice, Washington, DC, from 10 a.m. to 4 p.m. on each official business day.

[13 FR 8292, Dec. 24, 1948]

PART 11—DEBT COLLECTION

Subpart A—Retention of Private Counsel for Debt Collection

Sec.
11.1 Delegation of authority.
11.2 Pilot program.
11.3 Compliance with existing laws.

Subpart B—Administration of Debt Collection

11.4 Purpose and scope.
11.5 Delegation of authority.
11.6 Definitions.
11.7 Salary adjustments.
11.8 Salary offset.
11.9 Administrative offset.

Subpart C—IRS Tax Refund Offset Provisions for Collection of Debts

11.10 Scope.
11.11 Definitions.
11.12 Procedures.

AUTHORITY: 5 U.S.C. 301, 28 U.S.C. 509, 510, 31 U.S.C. 3718, 3720A.

SOURCE: Order No. 1201–87, 52 FR 24449, July 1, 1987, unless otherwise noted.

Subpart A—Retention of Private Counsel for Debt Collection

§ 11.1 Delegation of authority.

The Assistant Attorney General for Administration shall exercise the full authority of the Attorney General to develop and administer the Department of Justice pilot program for debt collection by private counsel. This authority shall include, but is not limited to, the authority to set policies and procedures for the program, and to enter into contracts for the retention of private counsel. The Assistant Attorney General for Adminstration can in turn delegate authority regarding debt collection to subordinate officials as appropriate. Existing delegations of authority with respect to settlement determinations on disputed claims shall remain in force. See generally, 28 CFR 0.160 *et seq*.

§ 11.2 Pilot program.

The Assistant Attorney General for Administration, in consultation with the Executive Office for United States Attorneys, shall designate the districts that will participate in the pilot program. U.S. Attorneys in the districts chosen for the pilot program, shall direct the full cooperation and assistance of their respective offices in implementing the program. Among other things, the U.S. Attorneys shall designate an Assistant U.S. Attorney to serve as the Contracting Officer's Technical Representative (COTR) on the contracts with private debt collection lawyers in their respective districts. The COTRs will be responsible for assisting the contracting officer by supervising the work of the private counsel in their respective districts and providing necessary approvals with respect to the initiation or settlement of lawsuits or similar matters.

§ 11.3 Compliance with existing laws.

The procurement of the services of private attorneys for debt collection shall be accomplished in accordance with the competitive procurement procedures mandated by Federal law, and set forth in the Federal Property and Administrative Services Act of 1949, 41 U.S.C. 251 *et seq*. Best efforts shall be made to encourage extensive participation by law firms owned and controlled by socially and economically disadvantaged individuals in the competition for award of these contracts in the pilot districts. Such efforts shall include, at minimum, publication of the

requirement for these services in the Commerce Business Daily and in a selection of pertinent legal publications likely to reach socially and economically disadvantaged firms, as well as sending written notice of the requirements to bar associations that have a significant socially and economically disadvantaged membership in the pilot districts. These special recruitment efforts will not authorize or permit preferential consideration to any bidders in selection for award of these contracts. The Department's Office of Small and Disadvantaged Business Utilization shall also make its resources available to assist in encouraging broad participation in this competition.

Subpart B—Administration of Debt Collection

SOURCE: Order No. 1625–92, 57 FR 44107, Sept. 24, 1992, unless otherwise noted.

§ 11.4 Purpose and scope.

(a) *Purpose.* The purpose of this subpart is to implement 5 U.S.C. 5514 and 31 U.S.C. 3716, which authorize the collection by salary or administrative offset of debts owed by persons, organizations, or entities to the federal government. Generally, however, a debt may not be collected by such means if it has been outstanding for more than ten years after the agency's right to collect the debt first accrued. This subpart is consistent with the Office of Personnel Management (OPM) regulations on salary offset, codified at 5 CFR part 550, subpart K, and with regulations on administrative offset published jointly by the General Accounting Office (GAO) and the Department of Justice (Department), codified at 4 CFR part 102.

(b) *Scope.* (1) This subpart establishes Departmental procedures for the collection of certain debts owed the government.

(2) This subpart applies to collections by the Department from:

(i) Federal employees who are indebted to the Department;

(ii) Employees of the Department who are indebted to other agencies; and

(iii) Other persons, organizations, or entities that are indebted to the Department.

(3) This subpart does not apply:

(i) To debts or claims arising under the Internal Revenue Code of 1986 (26 U.S.C. *et seq.*), the Social Security Act (42 U.S.C. 301 *et seq.*), or the tariff laws of the United States;

(ii) To a situation to which the Contract Disputes Act (41 U.S.C. 601 *et seq.*) applies; or

(iii) In any case where collection of a debt is explicitly provided for or prohibited by another statute (*e.g.*, travel advances in 5 U.S.C. 5705 and employee training expenses in 5 U.S.C. 4108).

(4) Nothing in this subpart precludes the compromise, suspension, or termination of collection actions where appropriate under the standards implementing the Federal Claims Collection Act (31 U.S.C. 3711 *et seq.*), namely, 4 CFR chapter II and 38 CFR 1.900–1.954).

(5) This subpart does not govern debt collection procedures implemented by other agencies.

§ 11.5 Delegation of authority.

Authority to conduct the following activities is hereby delegated to heads of Department organizations with respect to debts arising in their respective organizations:

(a) Initiate and effectuate the administrative collection process.

(b) Accept or reject compromise offers and suspend or terminate collection actions where the claim does not exceed $100,000 or such higher amount as the Attorney General may from time to time prescribe, exclusive of interest, administrative costs, and penalties as provided herein, as set forth in 311 U.S.C. 3711(a)(2).

(c) Report to consumer reporting agencies certain data pertaining to delinquent debts.

(d) Use offset procedures to effectuate collection.

(e) Take any other action necessary to facilitate and augment collection in accordance with the policies contained herein and as otherwise provided by law.

§ 11.6 Definitions.

Except where the context clearly indicates otherwise or where the term is otherwise defined elsewhere in this subpart, the following definitions shall apply to this subpart.

(a) *Agency* means:

(1) An executive agency as defined by 5 U.S.C. 105;

(2) A military department as defined by 5 U.S.C. 102;

(3) The United States Postal Service and the Postal Rate Commission;

(4) An agency of the judicial branch, including a court as defined by 28 U.S.C. 610, the District Court for the Northern Mariana Islands, and the Judicial Panel on Multidistrict Litigation;

(5) An agency of the legislative branch, including the U.S. Senate and the U.S. House of Representatives; and

(6) Other entities that are establishments of the federal government.

(b) *Bureau* means the Bureau of Prisons, the Drug Enforcement Administration, the Federal Bureau of Investigation (FBI), the Bureau of Alcohol, Tobacco, Firearms, and Explosives (ATF), Federal Prison Industries, the Immigration and Naturalization Service, the Office of Justice Programs, and the United States Marshals Service (USMS).

(c) *Certification* means a written statement received by a paying agency from a creditor agency that requests the paying agency to offset the salary of an employee and specifies that appropriate procedural protections have been afforded the employee.

(d) *Components* means the bureaus, offices, boards, and divisions of the Department.

(e) *Compromise* means the forgiveness of a debt in accordance with 31 U.S.C. 3711(a)(2) and DOJ Order No. 2120.4E. (Copies of this order are available in accordance with 28 CFR part 16, subpart A.)

(f) *Creditor agency* means an agency of the federal government to which the debt is owed.

(g) *Department* or *Justice Department* means the Department of Justice and its components.

(h) *Disposable pay* means that part of current basic pay, special pay, incentive pay, retired pay, retainer pay, and, in the case of an employee not entitled to basic pay, other authorized pay, remaining after the deduction of any amount required by law to be withheld. The Department shall allow the following deductions in determining the amount of disposable pay that is subject to salary offset:

(1) Amounts withheld from benefits payable under title II of the Social Security Act where the withholding is required the law;

(2) Federal employment taxes;

(3) Amounts mandatorily withheld for the United States Soldiers' and Airmen's Home;

(4) Fines and forfeiture ordered by a court-martial or by a commanding officer;

(5) Amounts deducted for Medicare;

(6) Federal, state, or local income taxes to the extent authorized or required by law, but no greater than would be the case if the employee claimed all dependents to which he or she is entitled and such additional amounts for which the employee presents evidence of a tax obligation supporting the additional withholding;

(7) Health insurance premiums;

(8) Normal retirement contributions (e.g., Civil Service Retirement deductions, Survivor Benefit Plan payments, or Retired Servicemen's Family Protection Plan payments), not including amounts deducted for supplementary coverage; and

(9) Normal life insurance premiums (*e.g.*, Serviceman's Group Life Insurance and ''Basic Life'' Federal Employee's Group Life Insurance premiums), not including amounts deducted for supplementary coverage.

(i) *Employee* means a current employee of the Justice Department or other agency, including a current member of the Armed Forces or a Reserve of the Armed Forces of the United States.

(j) *Federal Claims Collection Standards (FCCS)* means standards jointly published by the Department and the General Accounting Office in 4 CFR chapter II.

(k) *Hearing official* means an individual responsible for conducting any hearing with respect to the existence or amount of a debt claimed and for rendering a decision on the basis of such hearing. A hearing official may not be under the supervision or control of the Attorney General when the Department is the creditor agency but may be an administrative law judge.

(l) *Notice of Intent to Offset* or *Notice of Intent* means a written notice from a creditor agency to an employee, organization, or entity stating that the debtor is indebted to the creditor agency and apprising the debtor of certain procedural rights.

(m) *Notice of Salary Offset* means a written notice from the paying agency to an employee after a certification has been issued by a creditor agency, informing the employee that salary offset will begin at the next officially established pay interval.

(n) *Organization* means the bureaus individually and the offices, boards, and divisions collectively.

(o) *Organization head* means any Director, Administrator, or Commissioner of the respective Department bureaus, the Director of the United States Trustee System, the Director of the Executive Office for United States Attorneys, and the Assistant Attorney General for Administration, who shall serve as the organization head for the offices, boards, and divisions.

(p) *Paying agency* means the agency of the federal government that employs the individual who owes a debt to an agency of the federal government. In some cases, the Department may be both the creditor agency and the paying agency.

(q)(1) *Payroll office* means the payroll office in the paying agency that is primarily responsible for the payroll records and the coordination of pay matters with the appropriate personnel office with respect to an employee.

(2) *Applicable payroll office* means the Federal Bureau of Investigation voucher and Payroll Section with respect to FBI employees and the Justice Employee Data Service for all other employees of the Department.

(r) *Salary offset coordination officer* means an official designated by an organization head who is responsible for coordinating the debt collection activities of that organization.

[Order No. 1625–92, 57 FR 44107, Sept. 24, 1992, as amended by Order No. 2650–2003, 68 FR 4928, Jan. 31, 2003]

§ 11.7 Salary adjustments.

Any negative adjustment to pay arising out of an employee's election of coverage, or a change in coverage, under a Federal benefits program requiring periodic deductions from pay shall not be considered collection of a ''debt'' for the purposes of this subpart if the amount to be recovered was accumulated over four pay periods or less. In such cases, the Department need not comply with § 11.8, but it will endeavor to provide a clear and concise statement in the employee's earnings statement advising the employee of the previous overpayment at the time the adjustment is made.

§ 11.8 Salary offset.

(a) *Notice requirements before offset.* Deductions under the authority of 5 U.S.C. 5514 will not be made unless the creditor agency provides the employee with a written Notice of Intent to Offset a minimum of 30 calendar days before salary offset is initiated. When the Department is the creditor agency, this Notice of Intent shall be hand-delivered or sent by certified mail to the Assistant Director, Justice Employee Data Service, or to the Section Chief, Voucher and Payroll Section, Administrative Services Division, FBI, who shall then transmit the Notice of Intent to the debtor-employee. The Notice of Intent shall state:

(1) That the organization head has reviewed the records relating to the claim and has determined that a debt is owed, including the amount of the debt and the facts giving rise to the debt;

(2) The organization head's intention to collect the debt by means of deduction from the employee's current disposable pay account until the debt and all accumulated interest is paid in full;

(3) A repayment schedule that includes the amount, frequency, proposed beginning date, and duration of the intended deductions;

(4) The opportunity for the employee to propose an alternative written schedule for the voluntary repayment of the debt, in lieu of offset, on terms acceptable to the Department. The employee shall include a justification in the request for the alternative schedule. The schedule shall be agreed to and signed by both the employee and the organization head;

(5) An explanation of the Department's policy concerning interest, penalties, and administrative costs, including a statement that such assessments must be made unless excused in accordance with the Federal Claims Collection Standards;

(6) The employee's right to inspect and copy all records of the Department pertaining to the debt claimed or to receive copies of such records if the debtor is unable personally to inspect the records, due to geographical or other constraints;

(7) The name, address, and telephone number of an officer or employee of the Department to whom requests for access to Department records relating to the debt must be sent;

(8) The employee's right to a hearing conducted by an impartial hearing official (an administrative law judge or other hearing official not under the supervision or control of the Attorney General) with respect to the existence and amount of the debt claimed or the repayment schedule (*i.e.*, the percentage of disposable pay to be deducted each pay period), so long as a petition is filed by the employee as prescribed in paragraph (c)(1) of this section.

(9) The name, address, and telephone number of the officer or employee of the Department to whom a proposal for voluntary repayment must be sent; and the name, address, and telephone number of an officer or employee of the Department who may be contacted concerning procedures for requesting a hearing;

(10) The method and deadline for requesting a hearing;

(11) That the timely filing of a petition for a hearing on or before the 15th calendar day following receipt of the Notice of Intent will stay the commencement of collection proceedings;

(12) The name and address of the office to which the petition should be sent;

(13) That the Department will initiate certification procedures to implement a salary offset not less than 30 days from the date of receipt of the Notice of Intent to Offset, unless the employee files a timely petition for a hearing;

(14) That a final decision on whether a hearing will be held (if one is requested) will be issued at the earliest practical date, but not later than 60 days after the filing of the petition requesting the hearing;

(15) That any knowingly false or frivolous statements, representations, or evidence may subject the employee to:

(i) Disciplinary procedures appropriate under 5 U.S.C. chapter 75, 5 CFR part 752, or any other applicable statutes or regulations;

(ii) Penalties under the False Claims Act, 31 U.S.C. 3729–3731, or under any other applicable statutory authority; or

(iii) Criminal penalties under 18 U.S.C. 286, 287, 1001, and 1002 or under any other applicable statutory authority;

(16) Any other rights and remedies available to the employee under statutes or regulations governing the program for which the collection is being made;

(17) That unless there are applicable contractual or statutory provisions to the contrary, amounts paid on or deducted from debts that are later waived or found not to be owed to the United States will be promptly refunded to the employee, and

(i) Interest shall be paid on any amount paid on or deducted from a debt that is found not to be owed to the United States; and

(ii) Interest shall not be paid on any amount paid on or deducted from a debt that is later waived; and

(18) That proceedings with respect to such debt are governed by 5 U.S.C. 5514.

(b) *Review of Departmental records related to the debt.* (1) An employee who desires to inspect or copy Department records related to the debt must send a letter to the official designated in the Notice of Intent requesting access to the relevant records. The letter must be received in the office of the salary offset coordination official within 15 days after the employee's receipt of the Notice of Intent.

(2) In response to a timely request submitted by the debtor, the designated salary offset coordination official will notify the employee of the location and time when the employee may inspect and copy records related to the debt.

(3) If the employee is unable personally to inspect the records, due to geographical or other constraints, the salary offset coordination official shall arrange to send copies of such records to the employee.

(c) *Opportunity for a hearing where the Department is the creditor agency*—(1) *Request for a hearing.* (i) An employee who requests a hearing on the existence or amount of the debt held by the Department or on the offset schedule proposed by the Department must send such request to the office designated in the Notice of Intent. The request or petition for a hearing must be received by the designated office on or before the 15th calendar day following receipt by the employer of the notice.

(ii) The employee must specify whether an oral hearing is requested. If an oral hearing is desired, the request should explain why the matter cannot be resolved by review of the documentary evidence alone. The request must be signed by the employee and must fully identify and explain with reasonable specificity all the facts, evidence, and witnesses, if any, that the employee believes support his or her position.

(2) *Failure to timely submit.* If the employee files a request or petition for hearing after the expiration of the 15-calendar-day period provided for in paragraph (c)(1) of this section, the organization head may accept the request if the employee can show that the delay was the result of circumstances beyond his or her control or that he or she failed to receive actual notice of the filing deadline.

(3) *Obtaining the services of hearing official.* (i) When the debtor is not a Department employee and the Department cannot provide a prompt and appropriate hearing before an administrative law judge or other hearing official, the Department may request a hearing official from an agent of the paying agency, as designated in 5 CFR part 581, appendix A, or as otherwise designated by the paying agency.

(ii) When the debtor is a Department employee, the Department may contact any agent of another agency, as designated in 5 CFR part 581, appendix A, or as otherwise designated by the agency, to request a hearing official.

(4) *Procedure*—(i) *Notice.* After the employee requests a hearing, the hearing official shall notify the employee of the form of the hearing to be provided. If the hearing will be oral, the notice shall set forth the date, time, and location of the hearing, which must occur no more than 30 days after the request is received. If the hearing will be conducted by examination of documents, the employee shall be notified within 30 days that he or she should submit evidence and arguments in writing to the hearing official.

(ii) *Oral hearing.* An employee who requests an oral hearing shall be provided an oral hearing if the hearing official determines that the matter cannot be resolved by review of documentary evidence alone (e.g., when an issue of credibility or veracity is involved). The hearing need not be an adversarial adjudication, and rules of evidence need not apply. Oral hearings may take the form of, but are not limited to:

(A) Informal conferences with the hearing official in which the employee and agency representative are given full opportunity to present evidence, witnesses, and argument;

(B) Informal meetings in which the hearing examiner interviews the employee; or

(C) Formal written submissions followed by an opportunity for oral presentation.

Witnesses who testify in oral hearings shall do so under oath or affirmation.

(iii) *Documentary hearing.* If the hearing official determines that an oral hearing is not necessary, he or she shall make the determination based upon a review of the written record.

(iv) *Record.* The hearing official shall maintain a summary record of any hearing conducted under this section.

(5) *Date of decision.* The hearing official shall issue a written opinion stating his or her decision, based upon all evidence and information developed at the hearing, as soon as practicable after the hearing, but not later than 60 days after the date on which the petition was received by the Department, unless the hearing was delayed at the request of the employee, in which case the 60 day decision period shall be extended by the number of days by which the hearing was postponed. Decisions

not timely rendered shall result in the waiver of penalty and interest costs. The decision of the hearing official shall be final.

(6) *Content of decision*. The written decision shall include:

(i) A summary of the facts concerning the origin, nature, and amount of the debt;

(ii) The hearing official's findings, analysis, and conclusions; and

(iii) The terms of any repayment schedules, if applicable.

(7) *Failure to appear*. If, in the absence of good cause shown (*e.g.*, illness), the employee or the representative of the Department fails to appear, the hearing official shall proceed with the hearing as scheduled, and make his or her determination based upon the oral testimony presented and the documentation submitted by both parties. At the request of both parties, the hearing official may schedule a new hearing date. Both parties shall be given reasonable notice of the time and place of this new hearing.

(d) *Certification where the Department is the creditor agency*. (1) The salary offset coordination officer shall provide a certification to the appropriate payroll office in all cases where:

(i) The hearing official determines that a debt exists; or

(ii) The employee admits the existence and amount of the debt by failing to request a hearing.

(2) The certification must be in writing and must state:

(i) That the employee owes the debt;

(ii) The amount and basis of the debt;

(iii) The date the government's right to collect the debt first accrued;

(iv) That the Department's regulations have been approved by OPM pursuant to 5 CFR part 550, subpart K;

(v) If the collection is to be made by lump-sum payment, the amount and data such payment will be collected;

(vi) If the collection is to be made in installments, the number of installments to be collected, the amount of each installment, and the commencing date of the first installment, if a date other than the next officially established pay period; and

(vii) The date the employee was notified of the debt, the action(s) taken under 5 U.S.C. 5514(a), and the dates such actions were taken.

(e) *Voluntary repayment agreements as alternative to salary offset where the Department is the creditor agency*. (1) In response to a Notice of Intent, an employee may propose to repay the debt in accordance with scheduled installment payments. Any employee who wishes to repay a debt without salary offset shall submit in writing a proposed agreement to repay the debt. The proposal shall set forth a proposed repayment schedule. Any proposal under this subsection must be received by the office of the official designated in the notice within 15 calendar days after receipt of the Notice of Intent.

(2) In response to a timely proposal by the debtor, the organization head shall notify the employee whether the employee's proposed written agreement for repayment is acceptable. It is within the organization head's discretion to accept or reject a repayment agreement.

(3) If the organization head decides that the proposed repayment agreement is unacceptable, the employee shall have 15 days from the date he or she received notice of the decision in which to file a petition for a hearing.

(4) If the organization head decides that the proposed repayment agreement is acceptable, the arrangement shall be put in writing and signed by both the employee and the organization head.

(f) *Special review where the Department is the creditor agency*. (1) An employee subject to salary offset or a voluntary repayment agreement may, at any time, request a special review by the Department of the amount of the salary offset or voluntary payment, based on materially changed circumstances, including but not limited to catastrophic illness, divorce, death, or disability.

(2) In determining whether, as a result of materially changed circumstances, an offset would prevent the employee from meeting essential subsistence expenses (costs incurred for food, housing, clothing, transportation, and medical care), the employee shall submit a detailed statement and supporting documents for the employee,

his or her spouse, and dependents indicating:

(i) Income for all sources;

(ii) Assets;

(iii) Liabilities;

(iv) Number of dependents;

(v) Expenses for food, housing, clothing, and transportation;

(vi) Medical expenses; and

(vii) Exceptional expenses, if any.

(3) If the employee requests a special review under this paragraph, the employee shall file an alternative proposed offset or payment schedule and a statement, with supporting documents, showing why the current salary offset or payments result in an extreme financial hardship to the employee.

(4) The organization head shall evaluate the statement and supporting documents and determine whether the original offset or repayment schedule imposes an extreme financial hardship on the employee. The organization head shall notify the employee in writing within 30 days of such determination, including, if appropriate, his or her acceptance of a revised offset or payment schedule.

(5) If the special review results in a revised offset or repayment schedule, the salary offset coordination officer shall provide a new certification to the paying agency.

(g) *Notice of salary offset where the Department is the paying agency.* (1) Upon receipt of proper certification from the creditor agency, the applicable payroll office shall send the employee a written notice of salary offset. Such notice shall advise the employee that:

(i) The certification has been received from the creditor agency; and

(ii) Salary offset will be initiated at the next officially established pay interval.

(2) The applicable payroll office shall provide a copy of the notice to the creditor agency and advise such agency of the dollar amount to be offset and the pay period when the offset will begin.

(h) *Procedures for salary offset where the Department is the paying agency*—(1) *Generally.* (i) The salary offset coordination officer shall coordinate salary deductions under this section.

(ii) The applicable payroll office shall determine the amount of an employee's disposable pay and offset salary.

(iii) Deductions shall begin the pay period following receipt by the applicable payroll office of the certification or as soon thereafter as possible.

(2) *Types of collection*—(i) *Lump-sum payment.* If the amount of the debt is equal to or less than 15 percent of the employee's disposable pay, such debt ordinarily will be collected in one lump-sum payment.

(ii) *Installment deductions.* Installment deductions will be made over a period not greater than the anticipated period of employment. The size and frequency of installment deductions will bear a reasonable relation to the size of the debt and the employee's ability to pay. However, the amount deducted from any period will not exceed 15 percent of the disposable pay from which the deduction is made unless the employee has agreed in writing to the deduction of a greater amount. The installment payment should normally be sufficient in size and frequency to liquidate the debt in no more than three years. Installment payments of less than $50 should be accepted only in the most unusual circumstances.

(iii) *Lump-sum deductions from final check.* A lump-sum deduction exceeding 15 percent of disposable pay may be made pursuant to 31 U.S.C. 3716 from any final salary payment due a former employee in order to liquidate a debt, whether the former employee was separated voluntarily or involuntarily.

(iv) *Lump-sum deductions from other sources.* Whenever an employee subject to salary offset is separated from the Department, and the balance of the debt cannot be liquidated by offset of the final salary check, the Department, pursuant to 31 U.S.C. 3716, may offset any later payments of any kind against the balance of the debt.

(3) *Multiple debts.* Where two or more creditor agencies are seeking salary offset, or where two or more debts are owed to a single creditor agency, the applicable payroll office may, at its discretion, determine whether one or

more debts should be offset simultaneously within the 15 percent limitation. The best interests of the government shall be the primary consideration in the determination by the payroll office of the order of the debt collection.

(4) *Precedence of salary deductions by the Department.* (i) For Department employees, debts owed shall be paid out of disposable pay in the following order of precedence:

(A) Indebtedness due the Department.

(B) Indebtedness due other agencies.

(C) Garnishments for alimony and child support payments.

(D) Court-ordered bankruptcy payments under the Bankruptcy Code.

(E) Optional life insurance premiums.

(F) Other voluntary deductions including allotments and assignments, in the order determined by the paying agency.

(ii) In the event that a debt to the Department is certified while an employee is subject to salary offset to repay another agency, the applicable payroll office may decide whether the debt to the other agency should be repaid in full before collecting the Department's claim or whether changes should be made in the salary deduction being sent to the other agency. If debts owed to the Department can be collected in one pay period, the payroll office may suspend the salary offset to the other agency for that pay period in order to liquidate the Department's debt.

(i) *Coordinating salary offset with other agencies*—(1) *Responsibility of the Department as the creditor agency.* (i) The salary offset coordination officer shall be responsible for:

(A) Arranging for hearing upon proper petition by a federal employee;

(B) Preparing the Notice of Intent to Offset consistent with the requirements of paragraph (a) of this section;

(C) Obtaining hearing officials from other agencies pursuant to paragraph (c)(3) of this section; and

(D) Ensuring that each certification of debt is sent to a paying agency pursuant to paragraph (d)(2) of this section.

(ii) Upon completion of the procedures established in paragraphs (a) through (f) of this section, the salary offset coordination officer shall submit a debt claim and an installment agreement or other instruction on the payment schedule, if applicable, to the employee's paying agency.

(iii) If the employee is in the process of separating from government employment, the Department shall submit its debt claim to the employee's paying agency for collection by lump-sum deductions from the employee's final check. The paying agency shall certify the total amount of its collection and furnish a copy of the certification to the Department and to the employee.

(iv) If the employee is already separated and all payments due from his or her former paying agency have been paid, the Department may, unless otherwise prohibited, request that money due and payable to the employee from the federal government be administratively offset to collect the debt.

(v) When an employee transfers to another paying agency, the Department shall not repeat the procedures described in paragraphs (a) through (f) of this section in order to resume collecting the debt. Instead, the Department shall review the debt upon receiving the former paying agency's notice of the employee's transfer and shall ensure the collection is resumed by the new paying agency.

(2) *Responsibility of the Department as the paying agency*—(i) *Complete claim.* When the Department receives a certified claim from a creditor agency, the employee shall be given written notice of the certification, the date salary offset will begin, and the amount of the periodic deductions. Deductions shall be scheduled to begin at the next officially established pay interval or as soon thereafter as possible.

(ii) *Incomplete claim.* When the Department receives an incomplete certification of debt from a creditor agency, the Department shall return the debt claim with notice that procedures under 5 U.S.C. 5514 and 5 CFR 550.1104 must be followed and that a properly certified debt claim must be received before action will be taken to collect from the employee's current pay account.

(iii) *Review*. The Department is not authorized to review the merits of the creditor agency's determination with respect to the amount or validity of the debt certified by the creditor agency.

(iv) *Employees who transfer from one paying agency to another*. If, after the creditor agency has submitted the debt claim to the Department, the employee transfers to an agency outside the Department before the debt is collected in full, the Department must certify the total amount collected on the debt. One copy of the certification shall be furnished to the employee and one copy shall be sent to the creditor agency along with notice of the employee's transfer.

(j) *Interest, penalties, and administrative costs*. Where the Department is the creditor agency, it shall assess interest, penalties, and administrative costs pursuant to 31 U.S.C. 3717 and 4 CFR 102.13.

(k) *Refunds*. (1) Where the Department is the creditor agency, it shall promptly refund any amount deducted under the authority of 5 U.S.C. 5514 when:

(i) The debt is compromised or otherwise found not to be owing to the United States; or

(ii) An administrative or judicial order directs the Department to make a refund.

(2) Unless required by law or contract, refunds under this paragraph (k) shall not bear interest.

(l) *Request from a creditor agency for the services of a hearing official*. (1) The Department may provide a hearing official upon request of the creditor agency when the debtor is employed by the Department and the creditor agency cannot provide a prompt and appropriate hearing before a hearing official furnished pursuant to another lawful arrangement.

(2) The Department may provide a hearing official upon request of a creditor agency when the debtor works for the creditor agency and that agency cannot arrange for a hearing official.

(3) The salary offset coordination officer shall arrange for qualified personnel to serve as hearing officials.

(4) Services rendered under this paragraph (l) shall be provided on a fully reimbursable basis pursuant to 31 U.S.C. 1535.

(m) *Non-waiver of rights by payments*. A debtor's payment, whether voluntary or involuntary, of all or any portion of a debt being collected pursuant to this section shall not be construed as a waiver of any rights that the debtor may have under any statute, regulation, or contract except as otherwise provided by law or contract.

§ 11.9 Administrative offset.

(a) *Collection*. The organization head may collect a claim pursuant to 31 U.S.C. 3716 from a person, organization, or entity other than an agency of the United States Government by administrative offset of monies other than salaries payable by the government. Collection by administrative offset shall be undertaken where the claim is certain in amount, where offset is feasible and desirable and not otherwise prohibited, where the applicable statute of limitations has not expired, and where the offset is in the best interest of the United States.

(b) *Withholding of payment*. Prior to the completion of the procedures described in paragraph (c) of this section, the Department may withhold a payment to be made to a debtor, if:

(1) Failure to withhold payment would substantially prejudice the Department's ability to collect the debt; and

(2) The time before the payment is to be made does not reasonably permit completion of the procedures described in paragraph (c) of this section. Such prior withholding shall be followed promptly by the completion of the procedures described in paragraph (c) of this section.

(c) *Debtor's rights*. Unless the procedures described in paragraph (b) of this section are used, prior to collecting any claim by administrative offset, the organization head shall provide the debtor with the following:

(1) Written notification of the nature and amount of the claim, the intention of the organization head to collect the claim through administrative offset, and a statement of the rights of the debtor under this paragraph;

(2) An opportunity to inspect and copy the records of the Department with respect to the claim;

(3) An opportunity to have the Department's determination of indebtedness reviewed by the organization head. Any request for review by the debtor shall be in writing and be submitted to the Department within 30 days of the date of the notice of the offset. The organization head may waive the time limit for requesting review for good cause shown by the debtor; and

(4) An opportunity to enter into a written agreement for the repayment of the amount of the claim at the discretion of the Department.

If the procedures described in paragraph (b) of this section are employed, the procedures described in this paragraph shall be effected after offset.

(d) *Interest.* The Department is authorized to assess interest and related charges on debts that are not subject to 31 U.S.C. 3717 to the extent authorized under the common law or other applicable statutory authority.

Subpart C—IRS Tax Refund Offset Provisions for Collection of Debts

SOURCE: Order No. 1792–93, 58 FR 51223, Oct. 1, 1993, unless otherwise noted.

§ 11.10 Scope.

The provisions of 26 U.S.C. 6402(d) and 31 U.S.C. 3720A authorize the Secretary of the Treasury, acting through the Internal Revenue Service (IRS), to offset a delinquent debt owed to the United States Government from the tax refund due a taxpayer when other collection efforts have failed to recover the amount due. The purpose of these statutes is to improve the ability of the Government to collect money owed it while granting the debtor notice and certain other protections. This subpart authorizes the collection of debts owed to the United States Government by persons, organizations, and entities by means of offsetting any tax refunds due to the debtor by the IRS. It allows referral to the IRS for collection of debts that are past due and legally enforceable but not reduced to judgment and debts that have been reduced to judgment.

§ 11.11 Definitions.

(a) *Debt.* Debt means money owed by an individual, organization or entity from sources which include loans insured or guaranteed by the United States and all other amounts due the United States from fees, leases, services, overpayments, civil and criminal penalties, damages, interest, fines, administrative costs, and all other similar sources. A debt becomes eligible for tax refund offset procedures if it cannot currently be collected pursuant to the salary offset procedures of 5 U.S.C. 5514(a)(1) and is ineligible for administrative offset under 31 U.S.C. 3716(a) by reason of 31 U.S.C. 3716(c)(2), or cannot currently be collected by administrative offset under 31 U.S.C. 3716(a) against amounts payable to the debtor by the Department of Justice. A nonjudgment debt is eligible for tax refund offset procedures if the Department's or the referring agency's right of action accrued more than three months but less than ten years before the offset is made. Judgment debts are eligible for referral at any time. Debts that have been referred to the Department of Justice by other agencies for collection are included in this definition.

(b) *Past due.* All accelerated debts and all judgment debts are past due for purposes of this section. Such debts remain past due until paid in full. An accelerated debt is past due if, at the time of the notice required by § 11.12(b), any part of the debt had been due, but not paid, for at least 90 days. Such an unaccelerated debt remains past due until paid to the current amount of indebtedness.

(c) *Notice.* Notice means the information sent to the debtor pursuant to § 11.12(b). The date of the notice is the date shown on the notice letter as its date of issuance.

(d) *Dispute.* A dispute is a written statement supported by documentation or other evidence that all or part of an alleged debt is not past due or legally enforceable, that the amount is not the amount currently owed, that the outstanding debt has been satisfied, or, in the case of a debt reduced to judgment, that the judgment has been satisfied or stayed.

§ 11.12 Procedures.

(a) The Department may refer any past due, legally enforceable non-judgment debt of an individual, organization or entity to the IRS for offset if the Department's or the referring agency's rights of action accrued more than three months but less than ten years before the offset is made. Debts reduced to judgment may be referred at any time. Debts in amounts lower than $25.00 are not subject to referral.

(b) The Department will provide the debtor with written notice of its intent to offset before initiating the offset. Notice will be mailed to the debtor at the current address of the debtor, as determined from information obtained from the IRS pursuant to 26 U.S.C. 6103(m)(2), (4), (5) or from information regarding the debt maintained by the Department of Justice. The notice sent to the debtor will state the amount of the debt and inform the debtor that:

(1) The debt is past due;

(2) The Department intends to refer the debt to the IRS for offset from tax refunds that may be due to the taxpayer;

(3) The Department intends to provide information concerning the delinquent debt exceeding $100 to a consumer reporting bureau (credit bureau) unless such debt has already been disclosed; and

(4) The debtor has 65 days from the date of notice in which to present evidence that all or part of the debt is not past due, that the amount is not the amount currently owed, that the outstanding debt has been satisfied, or, if a judgment debt, that the debt has been satisfied, or stayed, before the debt is reported to a consumer reporting agency, if applicable, and referred to the IRS for offset from tax refunds.

(c) If the debtor neither pays the amount due nor presents evidence that the amount is not past due or is satisfied or stayed, the Department will report the debt to a consumer reporting agency at the end of the notice period, if applicable, and refer the debt to the IRS for offset from the taxpayer's federal tax refund.

(d) A debtor may request a review by the Department if the debtor believes that all or part of the debt is not past due or is not legally enforceable, or, in the case of a judgment debt, that the debt has been stayed or the amount satisfied, as follows:

(1) The debtor must send a written request for review to the address provided in the notice.

(2) The request must state the amount disputed and the reasons why the debtor believes that the debt is not past due, is not legally enforceable, has been satisfied, or, if a judgment debt, has been satisfied or stayed.

(3) The request must include any documents that the debtor wishes to be considered or state that additional information will be submitted within the time permitted.

(4) If the debtor wishes to inspect records establishing the nature and amount of the debt, the debtor must request an opportunity for such an inspection in writing. The office holding the relevant records shall make them available for inspection during normal business hours.

(5) The request for review and any additional information submitted pursuant to the request must be received by the Department at the address stated in the notice within 65 days of the date of issuance of the notice.

(6) The Department will review disputes and shall consider its records and any documentation and arguments submitted by the debtor. The Department's decision to refer to the IRS any disputed portion of the debt shall be made by the Assistant Attorney General for Administration of his designee, who shall hold a position at least one supervisory level above the person who made the decision to offset the debt. The Department shall send a written notice of its decision to the debtor. There is no administrative appeal of this decision.

(7) If the evidence presented by the debtor is considered by a non-Departmental agent or other entities or persons acting on the Department's behalf, the debtor will be accorded at least 30 days from the date the agent or other entity or person determines that all or part of the debt is past-due and legally enforceable to request review by an officer or employee of the Department of any unresolved dispute.

(8) Any debt that previously has been reviewed pursuant to this section or

any other section of this part, or that has been reduced to a judgment, may not be disputed except on the grounds of payments made or events occurring subsequent to the previous review of judgment.

(e) The Department will notify the IRS of any change in the amount due promptly after receipt of payments or notice of other reductions.

(f) In the event that more than one debt is owed, the IRS refund offset procedure will be applied in the order in which the debts became past due.

PART 12—REGISTRATION OF CERTAIN PERSONS HAVING KNOWLEDGE OF FOREIGN ESPIONAGE, COUNTERESPIONAGE, OR SABOTAGE MATTERS UNDER THE ACT OF AUGUST 1, 1956

Sec.
12.1 Definitions.
12.2 Administration of act.
12.3 Prior registration with the Foreign Agents Registration Unit.
12.4 Inquiries concerning application of act.
12.20 Filing of registration statement.
12.21 Time within which registration statement must be filed.
12.22 Material contents of registration statement.
12.23 Deficient registration statement.
12.24 Forms.
12.25 Amended registration statement.
12.30 Burden of establishing availability of exemptions.
12.40 Public examination.
12.41 Photocopies.
12.70 Partial compliance not deemed compliance.

AUTHORITY: Sec. 5, 70 Stat. 900; 50 U.S.C. 854.

CROSS REFERENCE: For Organization Statement, Internal Security Section, see subpart K of part 0 of this chapter.

SOURCE: 21 FR 5928, Aug. 8, 1956, unless otherwise noted.

§ 12.1 Definitions.

As used in this part, unless the context otherwise requires:

(a) The term *act* means the act of August 1, 1956, Public Law 893, 84th Congress, 2d Session, requiring the registration of certain persons who have knowledge of, or have received instruction or assignment in the espionage, counterespionage, or sabotage service or tactics of a foreign government or foreign political party.

(b) The term *Attorney General* means the Attorney General of the United States.

(c) The term *rules and regulations* refers to all rules, regulations, registration forms, and instruction to forms made and prescribed by the Attorney General pursuant to the act.

(d) The term *registration statement* means the registration required to be filed with the Attorney General under section 2 of the act.

(e) The term *registrant* means the person by whom a registration statement is filed pursuant to the provisions of the act.

§ 12.2 Administration of act.

The administration of the act is assigned to the National Security Division, Department of Justice. Communications with respect to the act shall be addressed to the National Security Division, Department of Justice, Washington, DC 20530. Copies of the act and the regulations contained in this part, including the forms mentioned therein, may be obtained upon request without charge.

[Order No. 2865–2007, 72 FR 10068, Mar. 7, 2007]

§ 12.3 Prior registration with the Foreign Agents Registration Unit.

No person who has filed a registration statement under the terms of the Foreign Agents Registration Act of 1938, as amended by section 20(a) of the Internal Security Act of 1950, shall be required to file a registration statement under the act, unless otherwise determined by the Chief, Registration Unit.

[21 FR 5928, Aug. 8, 1956, as amended by Order No. 524–73, 38 FR 18235, July 9, 1973; Order No. 960–81, 46 FR 52355, Oct. 27, 1981]

§ 12.4 Inquiries concerning application of act.

Inquiries concerning the application of the act must be accompanied by a detailed statement of all facts necessary for a determination of the question submitted, including the identity of the person on whose behalf the inquiry is made, the facts which may

bring such person within the registration provisions of the act, and the identity of the foreign government or foreign political party concerned.

§ 12.20 Filing of registration statement.

Registration statements shall be filed in duplicate with the National Security Division, Department of Justice, Washington, DC 20530. Filing may be made in person or by mail, and shall be deemed to have taken place upon the receipt thereof by the Division.

[Order No. 2865–2007, 72 FR 10068, Mar. 7, 2007]

§ 12.21 Time within which registration statement must be filed.

Every person who is or becomes subject to the registration provisions of the act after its effective date shall file a registration statement within fifteen days after the obligation to register arises.

§ 12.22 Material contents of registration statement.

The registration statement shall include the following, all of which shall be regarded as material for the purposes of the act:

(a) The registrant's name, principal business address, and all other business addresses in the United States or elsewhere, and all residence addresses.

(b) The registrant's citizenship status and how such status was acquired.

(c) A detailed statement setting forth the nature of the registrant's knowledge of the espionage, counterespionage, or sabotage service or tactics of a foreign government or foreign political party, and the manner in which, place where, and date when such knowledge was obtained.

(d) A detailed statement as to any instruction or training received by the registrant in the espionage, counterespionage, or sabotage service or tactics of a foreign government or foreign political party, including a description of the type of instruction or training received, a description of any courses taken, the dates when such courses commenced and when they ceased, and the name and official title of the instructor or instructors under whose supervision the courses were received as well as the name and location of schools and other institutions attended, the dates of such attendance, and the names of the directors of the schools and institutions attended.

(e) A detailed statement describing any assignment received in the espionage, counterespionage, or sabotage service or tactics of a foreign government or foreign political party, including the type of assignment, the date when each assignment began, the date of completion of each assignment, name and title of the person or persons under whose supervision the assignment was executed, and a complete description of the nature of the assignment and the execution thereof.

(f) A detailed statement of any relationship which may exist at the time of registration, other than through employment, between the registrant and any foreign government or foreign political party.

(g) Such other statements, information, or documents pertinent to the purposes and objectives of the act as the Attorney General, having due regard for the national security and the public interest, may require by this part or amendments thereto.

§ 12.23 Deficient registration statement.

A registration statement which is determined to be incomplete, inaccurate, misleading, or false, by the Chief Registration Unit, may be returned by him to the registrant as being unacceptable for filing under the terms of the act.

[21 FR 5928, Aug. 8, 1956, as amended by Order No. 524–73, 38 FR 18235, July 9, 1973]

§ 12.24 Forms.

(a) Every person required to register under the act shall file a registration statement on Form GA–1, and such other forms as may from time to time be prescribed by the Attorney General.

(b) Matter contained in any part of the registration statement or other document may not be incorporated by reference as answer, or partial answer, to any other item in the registration statement required to be filed under the act.

(c) Except as specifically provided otherwise, if any item on the form is inapplicable, or the answer is ''None,''

an express statement to such effect shall be made.

(d) Every statement, amendment, and every duplicate thereof, shall be executed under oath and shall be sworn to before a notary public or other officer authorized to administer oaths.

(e) A registration statement or amendment thereof required to be filed shall, if possible, be typewritten, but will be regarded as in substantial compliance with this regulation if written legibly in black ink.

(f) Riders shall not be used. If the space on the registration statement or other form is insufficient for any answer, reference shall be made in the appropriate space to a full insert page or pages on which the item number and item shall be restated and the complete answer given.

§ 12.25 Amended registration statement.

(a) An amended registration statement may be required by the Chief, Registration Unit, of any person subject to the registration provisions of the act whose original registration statement filed pursuant thereto is deemed to be incomplete, inaccurate, false, or misleading.

(b) Amendments shall conform in all respects to the regulations herein prescribed governing execution and filing of original registration statements.

(c) Amendments shall in every case make appropriate reference by number or otherwise to the items in original registration statements to which they relate.

(d) Amendments shall be deemed to have been filed upon the receipt thereof by the Registration Unit.

(e) Failure of the Chief, Registration Unit, to request any person described in section 2 of the act to file an amended registration statement shall not preclude prosecution of such person for a willfully false statement of a material fact, the willful omission of a material fact, or the willful omission of a material fact necessary to make the statements therein not misleading, in an original registration statement.

[21 FR 5928, Aug. 8, 1956, as amended by Order No. 524–73, 38 FR 18235, July 9, 1973]

§ 12.30 Burden of establishing availability of exemptions.

In all matters pertaining to exemptions, the burden of establishing the availability of the exemption shall rest with the person for whose benefit the exemption is claimed.

§ 12.40 Public examination.

Registration statements shall be available for public examination at the offices of the Registration Unit, Department of Justice, Washington, DC, from 10 a.m. to 4 p.m. on each official business day, except to the extent that the Attorney General having due regard for national security and public interest may withdraw such statements from public examination.

[Order No. 524–73, 38 FR 18235, July 9, 1973]

§ 12.41 Photocopies.

(a) Photocopies of registration statements filed in accordance with section 2 of the act are available to the public upon payment of fifty cents per photocopy of each page, whether several copies of a single original page or one or more copies of several original pages are ordered.

(b) Estimates as to prices for photocopies and the time required for their preparation will be furnished upon request addressed to the Registration Unit, Internal Security Section, Criminal Division, Department of Justice, Washington, DC 20530.

(c) Payment shall accompany the order for photocopies and shall be made in cash, or by United States money order, or by certified bank check payable to the Treasurer of the United States. Postage stamps will not be accepted.

[21 FR 5928, Aug. 8, 1956, as amended by Order No. 524–73, 38 FR 18235, July 9, 1973]

§ 12.70 Partial compliance not deemed compliance.

The fact that a registration statement has been filed shall not necessarily be deemed a full compliance with the act on the part of the registrant; nor shall it preclude prosecution, as provided for in the act, for willful failure to file a registration statement, or for a willfully false statement of a material fact therein, or

for the willful omission of a material fact required to be stated therein.

PART 13—ATOMIC WEAPONS AND SPECIAL NUCLEAR MATERIALS REWARDS REGULATIONS

Sec.
13.1 Purpose.
13.2 Policy.
13.3 Definitions.
13.4 Procedures: Responsibilities of the Attorney General.
13.5 Procedures: Responsibilities of the intra-departmental committee.
13.6 Criteria for reward.
13.7 Judicial review.

AUTHORITY: 50 U.S.C. 47d.

SOURCE: Order No. 974–82, 47 FR 11516, Mar. 17, 1982, unless otherwise noted.

§ 13.1 Purpose.

This part implements the responsibility given to the Attorney General under the Atomic Weapons and Special Nuclear Materials Rewards Act, 50 U.S.C. 47a–47f, for determining what persons are entitled to a reward for furnishing certain original information to the United States pertaining to atomic weapons and special nuclear material.

§ 13.2 Policy.

This program is intended to reward the provision of original information regarding situations involving an illegal diversion, an attempted illegal diversion, or a conspiracy to divert special nuclear material or atomic weapons. The broad scope of this program is to help guard against the loss or diversion of such material and to prevent any use or disposition thereof inimical to the common defense and security.

§ 13.3 Definitions.

Atomic energy means all forms of energy released in the course of nuclear fission or nuclear transformation.

Atomic weapon means any device utilizing atomic energy, exclusive of the means for transporting or propelling the device (where such means is a separable and divisible part of the device), the principal purpose of which is for use as, or for development of, a weapon, a weapon prototype, or a weapon test device.

Original information means information first supplied to the Federal government by the applicant, which was created or compiled through his own skill and judgment.

Special nuclear material means plutonium, or uranium enriched in the isotope 233 or in the isotope 235, or any other material which is found to be special nuclear material pursuant to the provisions of the Atomic Energy Act of 1954, 42 U.S.C. 2011 *et seq*.

United States, when used in a geographical sense, includes Puerto Rico, all Territories and possessions of the United States and the Canal Zone except in § 13.4(a)(4). In § 13.4(a)(4), *United States,* when used in a geographical sense, means the continental United States, Alaska, Hawaii, Puerto Rico, Guam, and the Virgin Islands of the United States.

§ 13.4 Procedures: Responsibilities of the Attorney General.

When a submission is made to the Department of Justice for a reward under the Atomic Weapons and Special Nuclear Materials Rewards Act, the Attorney General shall:

(a) Refer such submission for review to an intra-departmental committee composed of the Assistant Attorneys General for the Land and Natural Resources Division, the Criminal Division, and the Office of Legal Counsel or their delegates;

(b) Review the proposed finding of the review committee and determine whether a reward is justified and the amount of same;

(c) Secure the approval of the President for any reward over $50,000;

(d) Jointly determine (along with the Secretary of State and the Director of Central Intelligence), if the award is to go to an alien, whether the entry of such alien into the United States is in the public interest and whether that alien and members of his immediate family may receive immigrant visas and be admitted to the United States for permanent residence, notwithstanding the requirements of the Immigration and Nationality Act;

(e) Notify any person claiming an award of the determination regarding the claim and the amount of the reward, if any. If no reward is determined

to be justified, state the reasons, consistent with national security, for the denial;

(f) Certify and transmit, along with the approval of the President if necessary, any award to be made to the Director of Central Intelligence for payment out of funds appropriated or available for the administration of the National Security Act of 1947, as amended, 50 U.S.C. 401 *et seq;*

(g) Not certify any amount over $500,000.

§ 13.5 Procedures: Responsibilities of the intra-departmental committee.

When the Attorney General refers a submission for a reward to the intra-departmental committee, this committee:

(a) Shall consult with the Nuclear Regulatory Commission and the Department of Energy regarding the reward;

(b) May consult with the Central Intelligence Agency and any other departments or agencies it deems appropriate to aid in the determination of whether a reward should be given and the proper amount of the reward;

(c) May hold hearings for the purpose of securing and evaluating information; a full hearing on the record with oral presentation and cross-examination is not required;

(d) Shall determine whether the information submitted fits one or more of the rewardable categories outlined in § 13.6;

(e) Shall determine whether the applicant is eligible for the reward. Federal employees and military personnel whose duties include investigating activities covered by this Act are not eligible for a reward for information acquired in the course of their investigation;

(f) Shall submit to the Attorney General a proposed finding as to eligibility and a recommendation for the amount of the reward within 60 days of the date of referral from the Attorney General, unless good cause is shown for extending the time of review.

§ 13.6 Criteria for reward.

(a) Information provided by any person to the United States for a reward under the Atomic Weapons and Special Nuclear Materials Rewards Act must be original, and must concern the unlawful:

(1) Introduction, manufacture or acquisition, or

(2) Attempted introduction, manufacture or acquisition of, or

(3) Export or attempt to export, or

(4) Conspiracy to introduce, manufacture, acquire or export special nuclear material or atomic weapons, or

(5) Loss, diversion or disposal or special nuclear material or atomic weapons.

(b) The amount of the reward shall depend on:

(1) The amount of the material recovered or potentially recoverable, and the role the information played in the recovery, and

(2) The danger the material posed or poses to the common defense and security or public health and welfare, and

(3) The difficulty in ascertaining the information submitted to claim the reward, and the quality of the information, and

(4) Any other considerations which the Attorney General or the intra-departmental committee deems necessary or helpful to the individual determination.

§ 13.7 Judicial review.

The decision of the Attorney General is final and conclusive and no court shall have power or jurisdiction to review it.

PART 14—ADMINISTRATIVE CLAIMS UNDER FEDERAL TORT CLAIMS ACT

Sec.

14.1 Scope of regulations.
14.2 Administrative claim; when presented.
14.3 Administrative claim; who may file.
14.4 Administrative claims; evidence and information to be submitted.
14.5 Review by legal officers.
14.6 Dispute resolution techniques and limitations on agency authority.
14.7 [Reserved]
14.8 Investigation and examination.
14.9 Final denial of claim.
14.10 Action on approved claims.
14.11 Supplementing regulations.
APPENDIX TO PART 14—DELEGATIONS OF SETTLEMENT AUTHORITY

AUTHORITY: 5 U.S.C. 301; 28 U.S.C. 509, 510, 2672; 38 U.S.C. 224(a).

SOURCE: Order No. 371–66, 31 FR 16616, Dec. 29, 1966, unless otherwise noted.

§ 14.1 Scope of regulations.

These regulations shall apply only to claims asserted under the Federal Tort Claims Act. The terms *Federal agency* and *agency*, as used in this part, include the executive departments, the military departments, independent establishments of the United States, and corporations primarily acting as instrumentalities or agencies of the United States but do not include any contractor with the United States.

[Order No. 960–81, 46 FR 52355, Oct. 27, 1981]

§ 14.2 Administrative claim; when presented.

(a) For purposes of the provisions of 28 U.S.C. 2401(b), 2672, and 2675, a claim shall be deemed to have been presented when a Federal agency receives from a claimant, his duly authorized agent or legal representative, an executed Standard Form 95 or other written notification of an incident, accompanied by a claim for money damages in a sum certain for injury to or loss of property, personal injury, or death alleged to have occurred by reason of the incident; and the title or legal capacity of the person signing, and is accompanied by evidence of his authority to present a claim on behalf of the claimant as agent, executor, administrator, parent, guardian, or other representative.

(b)(1) A claim shall be presented to the Federal agency whose activities gave rise to the claim. When a claim is presented to any other Federal agency, that agency shall transfer it forthwith to the appropriate agency, if the proper agency can be identified from the claim, and advise the claimant of the transfer. If transfer is not feasible the claim shall be returned to the claimant. The fact of transfer shall not, in itself, preclude further transfer, return of the claim to the claimant or other appropriate disposition of the claim. A claim shall be presented as required by 28 U.S.C. 2401(b) as of the date it is received by the appropriate agency.

(2) When more than one Federal agency is or may be involved in the events giving rise to the claim, an agency with which the claim is filed shall contact all other affected agencies in order to designate the single agency which will thereafter investigate and decide the merits of the claim. In the event that an agreed upon designation cannot be made by the affected agencies, the Department of Justice shall be consulted and will thereafter designate an agency to investigate and decide the merits of the claim. Once a determination has been made, the designated agency shall notify the claimant that all future correspondence concerning the claim shall be directed to that Federal agency. All involved Federal agencies may agree either to conduct their own administrative reviews and to coordinate the results or to have the investigations conducted by the designated Federal agency, but, in either event, the designated Federal agency will be responsible for the final determination of the claim.

(3) A claimant presenting a claim arising from an incident to more than one agency should identify each agency to which the claim is submitted at the time each claim is presented. Where a claim arising from an incident is presented to more than one Federal agency without any indication that more than one agency is involved, and any one of the concerned Federal agencies takes final action on that claim, the final action thus taken is conclusive on the claims presented to the other agencies in regard to the time required for filing suit set forth in 28 U.S.C. 2401(b). However, if a second involved Federal agency subsequently desires to take further action with a view towards settling the claim the second Federal agency may treat the matter as a request for reconsideration of the final denial under 28 CFR 14.9(b), unless suit has been filed in the interim, and so advise the claimant.

(4) If, after an agency final denial, the claimant files a claim arising out of the same incident with a different Federal agency, the new submission of the claim will not toll the requirement of 28 U.S.C. 2401(b) that suit must be filed within six months of the final denial by the first agency, unless the second agency specifically and explicitly treats the second submission as a request for reconsideration under 28 CFR 14.9(b) and so advises the claimant.

(c) A claim presented in compliance with paragraph (a) of this section may be amended by the claimant at any time prior to final agency action or prior to the exercise of the claimant's option under 28 U.S.C. 2675(a). Amendments shall be submitted in writing and signed by the claimant or his duly authorized agent or legal representative. Upon the timely filing of an amendment to a pending claim, the agency shall have six months in which to make a final disposition of the claim as amended and the claimant's option under 28 U.S.C. 2675(a) shall not accrue until six months after the filing of an amendment.

[Order No. 870–79, 45 FR 2650, Jan. 14, 1980, as amended by Order No. 960–81, 46 FR 52355, Oct. 27, 1981; Order No. 1179–87, 52 FR 7411, Mar. 11, 1987]

§ 14.3 Administrative claim; who may file.

(a) A claim for injury to or loss of property may be presented by the owner of the property, his duly authorized agent or legal representative.

(b) A claim for personal injury may be presented by the injured person, his duly authorized agent, or legal representative.

(c) A claim based on death may be presented by the executor or administrator of the decendent's estate, or by any other person legally entitled to assert such a claim in accordance with applicable State law.

(d) A claim for loss wholly compensated by an insurer with the rights of a subrogee may be presented by the insurer. A claim for loss partially compensated by an insurer with the rights of a subrogee may be presented by the parties individually as their respective interests appear, or jointly.

[Order No. 371–66, 31 FR 16616, Dec. 29, 1966, as amended by Order No. 1179–87, 52 FR 7412, Mar. 11, 1987]

§ 14.4 Administrative claims; evidence and information to be submitted.

(a) *Death*. In support of a claim based on death, the claimant may be required to submit the following evidence or information:

(1) An authenticated death certificate or other competent evidence showing cause of death, date of death, and age of the decedent.

(2) Decedent's employment or occupation at time of death, including his monthly or yearly salary or earnings (if any), and the duration of his last employment or occupation.

(3) Full names, addresses, birth dates, kinship, and marital status of the decedent's survivors, including identification of those survivors who were dependent for support upon the decedent at the time of his death.

(4) Degree of support afforded by the decedent to each survivor dependent upon him for support at the time of his death.

(5) Decedent's general physical and mental condition before death.

(6) Itemized bills for medical and burial expenses incurred by reason of the incident causing death, or itemized receipts of payment for such expenses.

(7) If damages for pain and suffering prior to death are claimed, a physician's detailed statement specifying the injuries suffered, duration of pain and suffering, any drugs administered for pain, and the decedent's physical condition in the interval between injury and death.

(8) Any other evidence or information which may have a bearing on either the responsibility of the United States for the death or the damages claimed.

(b) *Personal injury*. In support of a claim for personal injury, including pain and suffering, the claimant may be required to submit the following evidence or information:

(1) A written report by his attending physician or dentist setting forth the nature and extent of the injury, nature and extent of treatment, any degree of temporary or permanent disability, the prognosis, period of hospitalization, and any diminished earning capacity. In addition, the claimant may be required to submit to a physical or mental examination by a physician employed by the agency or another Federal agency. A copy of the report of the examining physician shall be made available to the claimant upon the claimant's written request provided that he has, upon request, furnished the report referred to in the first sentence of this paragraph and has made or agrees to make available to the

agency any other physician's reports previously or thereafter made of the physical or mental condition which is the subject matter of his claim.

(2) Itemized bills for medical, dental, and hospital expenses incurred, or itemized receipts of payment for such expenses.

(3) If the prognosis reveals the necessity for future treatment, a statement of expected expenses for such treatment.

(4) If a claim is made for loss of time from employment, a written statement from his employer showing actual time lost from employment, whether he is a full or part-time employee, and wages or salary actually lost.

(5) If a claim is made for loss of income and the claimant is self-employed, documentary evidence showing the amounts of earnings actually lost.

(6) Any other evidence or information which may have a bearing on either the responsibility of the United States for the personal injury or the damages claimed.

(c) *Property damage.* In support of a claim for injury to or loss of property, real or personal, the claimant may be required to submit the following evidence or information:

(1) Proof of ownership.

(2) A detailed statement of the amount claimed with respect to each item of property.

(3) An itemized receipt of payment for necessary repairs or itemized written estimates of the cost of such repairs.

(4) A statement listing date of purchase, purchase price and salvage value, where repair is not economical.

(5) Any other evidence or information which may have a bearing on either the responsibility of the United States for the injury to or loss of property or the damages claimed.

§ 14.5 Review by legal officers.

The authority to adjust, determine, compromise, and settle a claim under the provisions of section 2672 of title 28, United States Code, shall, if the amount of a proposed compromise, settlement, or award exceeds $5,000, be exercised by the head of an agency or his designee only after review by a legal officer of the agency.

[Order No. 371–66, 31 FR 16616, Dec. 29, 1966, as amended by Order No. 757–77, 42 FR 62001, Dec. 8, 1977; Order No. 960–81, 46 FR 52355, Oct. 27, 1981]

§ 14.6 Dispute resolution techniques and limitations on agency authority.

(a) *Guidance regarding dispute resolution.* The administrative process established pursuant to 28 U.S.C. 2672 and this part 14 is intended to serve as an efficient effective forum for rapidly resolving tort claims with low costs to all participants. This guidance is provided to agencies to improve their use of this administrative process and to maximize the benefit achieved through application of prompt, fair, and efficient techniques that achieve an informal resolution of administrative tort claims without burdening claimants or the agency. This section provides guidance to agencies only and does not create or establish any right to enforce any provision of this part on behalf of any claimant against the United States, its agencies, its officers, or any other person. This section also does not require any agency to use any dispute resolution technique or process.

(1) Whenever feasible, administrative claims should be resolved through informal discussions, negotiations, and settlements rather than through the use of any formal or structured process. At the same time, agency personnel processing administrative tort claims should be trained in dispute resolution techniques and skills that can contribute to the prompt, fair, and efficient resolution of administrative claims.

(2) An agency may resolve disputed factual questions regarding claims against the United States under the FTCA, including 28 U.S.C. 2671–2680, through the use of any alternative dispute resolution technique or process if the agency specifically agrees to employ the technique or process, and reserves to itself the discretion to accept or reject the determinations made through the use of such technique or process.

(3) Alternative dispute resolution techniques or processes should not be

adopted arbitrarily but rather should be based upon a determination that use of a particular technique is warranted in the context of a particular claim or claims, and that such use will materially contribute to the prompt, fair, and efficient resolution of the claims. If alternative dispute resolution techniques will not materially contribute to the prompt, fair, and efficient resolution of claims, the dispute resolution processes otherwise used pursuant to these regulations shall be the preferred means of seeking resolution of such claims.

(b) *Alternative dispute resolution*—(1) *Case-by-case*. In order to use, and before using, any alternative dispute resolution technique or process to facilitate the prompt resolution of disputes that are in excess of the agency's delegated authority, an agency may use the following procedure to obtain written approval from the Attorney General, or his or her designee, to compromise a claim or series of related claims.

(i) A request for settlement authority under paragraph (b)(1) of this section shall be directed to the Director, Torts Branch, Civil Division, Department of Justice, (''Director'') and shall contain information justifying the request, including:

(A) The basis for concluding that liability exists under the FTCA;

(B) A description of the proposed alternative dispute resolution technique or process and a statement regarding why this proposed form of alternative dispute resolution is suitable for the claim or claims;

(C) A statement reflecting the claimant's or claimants' consent to use of the proposed form of alternative dispute resolution, indicating the proportion of any additional cost to the United States from use of the proposed alternative dispute resolution technique or process that shall be borne by the claimant or claimants, and specifying the manner and timing of payment of that proportion to be borne by the claimant or claimants;

(D) A statement of how the requested action would facilitate use of an alternative dispute resolution technique or process;

(E) An explanation of the extent to which the decision rendered in the alternative dispute resolution proceeding would be made binding upon claimants; and,

(F) An estimate of the potential range of possible settlements resulting from use of the proposed alternative dispute resolution technique.

(ii) The Director shall forward a request for expedited settlement action under paragraph (b)(1)(i) of this section, along with the Director's recommendation as to what action should be taken, to the Department of Justice official who has authority to authorize settlement of the claim or related claims. If that official approves the request, a written authorization shall be promptly forwarded to the requesting agency.

(2) *Delegation of authority*. Pursuant to, and within the limits of, 28 U.S.C. 2672, the head of an agency or his or her designee may request delegations of authority to make any award, compromise, or settlement without the prior written approval of the Attorney General or his or her designee in excess of the agency's authority. In considering whether to delegate authority pursuant to 28 U.S.C. 2672 in excess of previous authority conferred upon the agency, consideration shall be given to:

(i) The extent to which the agency has established an office whose responsibilities expressly include the administrative resolution of claims presented pursuant to the Federal Tort Claims Act;

(ii) The agency's experience with the resolution of administrative claims presented pursuant to 28 U.S.C. 2672;

(iii) The Department of Justice's experiences with regard to administrative resolution of tort claims arising out of the agency's activities.

(c) *Monetary authority*. An award, compromise, or settlement of a claim by an agency under 28 U.S.C. 2672, in excess of $25,000 or in excess of the authority delegated to the agency by the Attorney General pursuant to 28 U.S.C. 2672, whichever is greater, shall be effected only with the prior written approval of the Attorney General or his or her designee. For purposes of this paragraph, a principal claim and any derivative or subrogated claim shall be treated as a single claim.

(d) *Limitations on settlement authority*—(1) *Policy*. An administrative claim may be adjusted, determined, compromised, or settled by an agency under 28 U.S.C. 2672 only after consultation with the Department of Justice when, in the opinion of the agency:

(i) A new precedent or a new point of law is involved; or

(ii) A question of policy is or may be involved; or

(iii) The United States is or may be entitled to indemnity or contribution from a third party and the agency is unable to adjust the third party claim; or

(iv) The compromise of a particular claim, as a practical matter, will or may control the disposition of a related claim in which the amount to be paid may exceed $25,000 or may exceed the authority delegated to the agency by the Attorney General pursuant to 28 U.S.C. 2672, whichever is greater.

(2) *Litigation arising from the same incident*. An administrative claim may be adjusted, determined, compromised, or settled by an agency under 28 U.S.C. 2672 only after consultation with the Department of Justice when the agency is informed or is otherwise aware that the United States or an employee, agent, or cost-plus contractor of the United States is involved in litigation based on a claim arising out of the same incident or transaction.

(e) *Procedure*. When Department of Justice approval or consultation is required, or the advice of the Department of Justice is otherwise to be requested, under this section, the written referral or request of the Federal agency shall be directed to the Director at any time after presentment of a claim to the Federal agency, and shall contain:

(1) A short and concise statement of the facts and of the reasons for the referral or request;

(2) Copies of relevant portions of the agency's claim file; and

(3) A statement of the recommendations or views of the agency.

[Order No. 1591–92, 57 FR 21738, May 22, 1992]

§ 14.7 [Reserved]

§ 14.8 Investigation and examination.

A Federal agency may request any other Federal agency to investigate a claim filed under section 2672, title 28, U.S. Code, or to conduct a physical examination of a claimant and provide a report of the physical examination. Compliance with such requests may be conditioned by a Federal agency upon reimbursement by the requesting agency of the expense of investigation or examination where reimbursement is authorized, as well as where it is required, by statute or regulation.

§ 14.9 Final denial of claim.

(a) Final denial of an administrative claim shall be in writing and sent to the claimant, his attorney, or legal representative by certified or registered mail. The notification of final denial may include a statement of the reasons for the denial and shall include a statement that, if the claimant is dissatisfied with the agency action, he may file suit in an appropriate U.S. District Court not later than 6 months after the date of mailing of the notification.

(b) Prior to the commencement of suit and prior to the expiration of the 6-month period provided in 28 U.S.C. 2401(b), a claimant, his duly authorized agent, or legal representative, may file a written request with the agency for reconsideration of a final denial of a claim under paragraph (a) of this section. Upon the timely filing of a request for reconsideration the agency shall have 6 months from the date of filing in which to make a final disposition of the claim and the claimant's option under 28 U.S.C. 2675(a) shall not accrue until 6 months after the filing of a request for reconsideration. Final agency action on a request for reconsideration shall be effected in accordance with the provisions of paragraph (a) of this section.

[Order No. 371–66, 31 FR 16616, Dec. 29, 1966, as amended by Order No. 422–69, 35 FR 315, Jan. 8, 1970]

§ 14.10 Action on approved claims.

(a) Any award, compromise, or settlement in an amount of $2,500 or less made pursuant to 28 U.S.C. 2672 shall be paid by the head of the Federal agency concerned out of the appropriations available to that agency. Payment of an award, compromise, or settlement in excess of $2,500 shall be obtained by

the agency by forwarding Standard Form 1145 to the Claims Division, General Accounting Office. When an award is in excess of $25,000, or in excess of the authority delegated to the agency by the Attorney General pursuant to 28 U.S.C. 2672, whichever is greater, Standard Form 1145 must be accompanied by evidence that the award, compromise, or settlement has been approved by the Attorney General or his designee. When the use of Standard Form 1145 is required, it shall be executed by the claimant, or it shall be accompanied by either a claims settlement agreement or a Standard Form 95 executed by the claimant. When a claimant is represented by an attorney, the voucher for payment shall designate both the claimant and his attorney as payees; the check shall be delivered to the attorney, whose address shall appear on the voucher.

(b) Acceptance by the claimant, his agent, or legal representative, of any award, compromise or settlement made pursuant to the provisions of section 2672 or 2677 of title 28, United States Code, shall be final and conclusive on the claimant, his agent or legal representative and any other person on whose behalf or for whose benefit the claim has been presented, and shall constitute a complete release of any claim against the United States and against any employee of the Government whose act or omission gave rise to the claim, by reason of the same subject matter.

[Order No. 371–66, 31 FR 16616, Dec. 29, 1966, as amended by Order No. 834–79, 44 FR 33399, June 11, 1979; Order No. 1591–92, 57 FR 21740, May 22, 1992]

§ 14.11 Supplementing regulations.

Each agency is authorized to issue regulations and establish procedures consistent with the regulations in this part.

APPENDIX TO PART 14—DELEGATIONS OF SETTLEMENT AUTHORITY

DELEGATION OF AUTHORITY TO THE SECRETARY OF VETERANS AFFAIRS

Section 1. AUTHORITY TO COMPROMISE TORT CLAIMS.

(a) The Secretary of Veterans Affairs shall have the authority to adjust, determine, compromise and settle a claim involving the United States Department of Veterans Affairs under section 2672 of title 28, United States Code, relating to the administrative settlement of federal tort claims, if the amount of the proposed adjustment, compromise, or award does not exceed $200,000. When the Secretary of Veterans Affairs believes a claim pending before him presents a novel question of law or of policy, he shall obtain the advice of the Assistant Attorney General in charge of the Civil Division.

(b) The Secretary of Veterans Affairs may redelegate in writing the settlement authority delegated to him under this section.

Section 2. MEMORANDUM.

Whenever the Secretary of Veterans Affairs settles any administrative claim pursuant to the authority granted by section 1 for an amount in excess of $100,000 and within the amount delegated to him under section 1, a memorandum fully explaining the basis for the action taken shall be executed. A copy of this memorandum shall be sent to the Director, FTC Staff, Torts Branch of the Civil Division.

DELEGATION OF AUTHORITY TO THE POSTMASTER GENERAL

Section 1. AUTHORITY TO COMPROMISE TORT CLAIMS.

(a) The Postmaster General shall have the authority to adjust, determine, compromise and settle a claim involving the Postal Service under section 2672 of title 28, United States Code, relating to the administrative settlement of federal tort claims, if the amount of the proposed adjustment, compromise, or award does not exceed $200,000. When the Postmaster General believes a claim pending before him presents a novel question of law or of policy, he shall obtain the advice of the Assistant Attorney General in charge of the Civil Division.

(b) The Postmaster General may redelegate in writing the settlement authority delegated to him under this section.

Section 2. MEMORANDUM.

Whenever the Postmaster General settles any administrative claim pursuant to the authority granted by section 1 for an amount in excess of $100,000 and within the amount delegated to him under section 1, a memorandum fully explaining the basis for the action taken shall be executed. A copy of this memorandum shall be sent to the Director, FTCA Staff, Torts Branch of the Civil Division.

DELEGATION OF AUTHORITY TO THE SECRETARY OF DEFENSE

Section 1. AUTHORITY TO COMPROMISE TORT CLAIMS.

(a) The Secretary of Defense shall have the authority to adjust, determine, compromise and settle a claim involving the United States Department of Defense under section 2672 of title 28, United States Code, relating to the administrative settlement of federal tort claims, if the amount of the proposed adjustment, compromise, or award does not exceed $200,000. When the Secretary of Defense believes a claim pending before him presents a novel question of law or of policy, he shall obtain the advice of the Assistant Attorney General in charge of the Civil Division.

(b) The Secretary of Defense may redelegate in writing the settlement authority delegated to him under this section.

Section 2. MEMORANDUM.

Whenever the Secretary of Defense settles any administrative claim pursuant to the authority granted by section 1 for an amount in excess of $100,000 and within the amount delegated to him under section 1, a memorandum fully explaining the basis for the action taken shall be executed. A copy of this memorandum shall be sent to the Director, FTCA Staff, Torts Branch of the Civil Division.

DELEGATION OF AUTHORITY TO THE SECRETARY OF TRANSPORTATION

Section 1. AUTHORITY TO COMPROMISE TORT CLAIMS.

(a) The Secretary of Transportation shall have the authority to adjust, determine, compromise and settle a claim involving the United States Department of Transportation under section 2672 of title 28, United States Code, relating to the administrative settlement of federal tort claims, if the amount of the proposed adjustment, compromise, or award does not exceed $100,000. When the Secretary of Transportation believes a claim pending before him presents a novel question of law or of policy, he shall obtain the advice of the Assistant Attorney General in charge of the Civil Division.

(b) The Secretary of Transportation may redelegate in writing the settlement authority delegated to him under this section.

Section 2. MEMORANDUM.

Whenever the Secretary of Transportation settles any administrative claim pursuant to the authority granted by section 1 for an amount in excess of $50,000 and within the amount delegated to him under section 1, a memorandum fully explaining the basis for the action taken shall be executed. A copy of this memorandum shall be sent to the Director, FTCA Staff, Torts Branch of the Civil Division.

DELEGATION OF AUTHORITY TO THE SECRETARY OF HEALTH AND HUMAN SERVICES

Section 1. AUTHORITY TO COMPROMISE TORT CLAIMS.

(a) The Secretary of Health and Human Services shall have the authority to adjust, determine, compromise, and settle a claim involving the Department of Health and Human Services under section 2672 of title 28, United States Code, relating to the administrative settlement of federal tort claims, if the amount of the proposed adjustment, compromise, or award does not exceed $200,000. When the Secretary of Health and Human Services believes a claim pending before him presents a novel question of law or policy, he shall obtain the advice of the Assistant Attorney General in charge of the Civil Division.

(b) The Secretary of Health and Human Services may redelegate, in writing, the settlement authority delegated to him under this section.

Section 2. MEMORANDUM.

Whenever the Secretary of Health and Human Services settles any administrative claim pursuant to the authority granted by section 1 for an amount in excess of $100,000 and within the amount delegated to him under section 1, a memorandum fully explaining the basis for the action taken shall be executed. A copy of this memorandum shall be sent to the Director, FTCA Staff, Torts Branch of the Civil Division.

[Order No. 1302–88, 53 FR 37753, Sept. 28, 1988, as amended by Order No. 1471–91, 56 FR 4943, Feb. 7, 1991; Order No. 1482–91, 56 FR 12846, Mar. 28, 1991; Order No. 1583–92, 57 FR 13320, Apr. 16, 1992; 58 FR 36867, July 9, 1993; 61 FR 66220, Dec. 17, 1996; 68 FR 62517, Nov. 5, 2003]

PART 15—CERTIFICATION AND DECERTIFICATION IN CONNECTION WITH CERTAIN SUITS BASED UPON ACTS OR OMISSIONS OF FEDERAL EMPLOYEES AND OTHER PERSONS

Sec.
15.1 General provisions.
15.2 Expeditious delivery of process and pleadings.
15.3 Agency report.
15.4 Removal and defense of suits.

AUTHORITY: 5 U.S.C. 301, 8477(e)(4); 10 U.S.C. 1054, 1089; 22 U.S.C. 2702; 28 U.S.C. 509, 510, and 2679; 38 U.S.C. 7316; 42 U.S.C. 233, 2212, 2458a, and 5055(f); and the National Swine Flu

Immunization Program of 1976, 90 Stat. 1113 (1976).

SOURCE: Order No. 2697–2003, 68 FR 74188, Dec. 23, 2003, unless otherwise noted.

§ 15.1 General provisions.

(a) This part contains the regulations of the Department of Justice governing the application for and the issuance of statutory certifications and decertifications in connection with certain suits based upon the acts or omissions of Federal employees and certain other persons as to whom the remedy provided by the Federal Tort Claims Act, 28 U.S.C. 1346(b) and 2672, is made exclusive of any other civil action or proceeding for money damages by reason of the same subject matter against such Federal employees and other persons.

(b) As used in this part:

(1) *Appropriate Federal agency* means the Federal agency most closely associated with the program out of which the claim or suit arose. When it cannot be ascertained which Federal agency is the most closely associated with the program out of which the claim or suit arose, the responsible Director of the Torts Branch, Civil Division, Department of Justice, shall be consulted and will thereafter designate the appropriate Federal agency.

(2) *Federal employee* means ''employee of the United States'' as that term is defined by 28 U.S.C. 2671.

(3) *Covered person* means any person other than a Federal employee or the estate of a Federal employee as to whom Congress has provided by statute that the remedy provided by 28 U.S.C. 1346(b) and 2672 is made exclusive of any other civil action or proceeding for money damages by reason of the same subject matter against such person.

§ 15.2 Expeditious delivery of process and pleadings.

(a) Any Federal employee against whom a civil action or proceeding is brought for money damages for loss or damage to property, or personal injury or death, on account of any act or omission in the scope of the employee's office or employment with the Federal Government, shall promptly deliver all process and pleadings served on the employee, or an attested true copy thereof, to the employee's immediate superior or to whomever is designated by the head of the employee's department or agency to receive such papers. In addition, if prior to the employee's receipt of such process or pleadings, the employee receives information regarding the commencement of such a civil action or proceeding, he shall immediately so advise his superior or the designee. If the action is brought against the employee's estate this procedure shall apply to the employee's personal representative. The superior or designee shall provide the United States Attorney for the district embracing the place where the action or proceeding is brought and the responsible Branch Director of the Torts Branch, Civil Division, Department of Justice, information concerning the commencement of such action or proceeding, and copies of all process and pleadings.

(b) Any covered person against whom a civil action or proceeding is brought for money damages for loss or damage to property, or personal injury or death, on account of any act or omission, under circumstances in which Congress has provided by statute that the remedy provided by the Federal Tort Claims Act is made the exclusive remedy, shall promptly deliver to the appropriate Federal agency all process and pleadings served on the covered person, or an attested true copy thereof. In addition, if prior to the covered person's receipt of such process or pleadings, the covered person receives information regarding the commencement of such a civil action or proceeding, he shall immediately so advise the appropriate Federal agency. The appropriate Federal agency shall provide to the United States Attorney for the district embracing the place where the action or proceeding is brought, and the responsible Branch Director of the Torts Branch, Civil Division, Department of Justice, information concerning the commencement of such action or proceeding, and copies of all process and pleadings.

§ 15.3 Agency report.

(a) The Federal employee's employing Federal agency shall submit a report to the United States Attorney for

the district embracing the place where the civil action or proceeding is brought fully addressing whether the employee was acting within the scope of his office or employment with the Federal Government at the time of the incident out of which the suit arose, and a copy of the report shall be sent by the employing Federal agency to the responsible Branch Director of the Torts Branch, Civil Division, Department of Justice.

(b) The appropriate Federal agency shall submit a report to the United States Attorney for the district embracing the place where the civil action or proceeding is brought fully addressing whether the person was acting as a covered person at the time of the incident out of which the suit arose, and a copy of the report shall be sent by the appropriate Federal agency to the responsible Branch Director of the Torts Branch, Civil Division, Department of Justice.

(c) A report under this section shall be submitted at the earliest possible date, or within such time as shall be fixed upon request by the United States Attorney or the responsible Branch Director of the Torts Branch.

§ 15.4 Removal and defense of suits.

(a) The United States Attorney for the district where the civil action or proceeding is brought, or any Director of the Torts Branch, Civil Division, Department of Justice, is authorized to make the statutory certification that the Federal employee was acting within the scope of his office or employment with the Federal Government at the time of the incident out of which the suit arose.

(b) The United States Attorney for the district where the civil action or proceeding is brought, or any Director of the Torts Branch, Civil Division, Department of Justice, is authorized to make the statutory certification that the covered person was acting at the time of the incident out of which the suit arose under circumstances in which Congress has provided by statute that the remedy provided by the Federal Tort Claims Act is made the exclusive remedy.

(c) A certification under this section may be withdrawn if a further evaluation of the relevant facts or the consideration of new or additional evidence calls for such action. The making, withholding, or withdrawing of certifications, and the removal and defense of, or refusal to remove or defend, such civil actions or proceedings shall be subject to the instructions and supervision of the Assistant Attorney General in charge of the Civil Division or his or her designee.

PART 16—PRODUCTION OR DISCLOSURE OF MATERIAL OR INFORMATION

Subpart A—Procedures for Disclosure of Records Under the Freedom of Information Act

Sec.
16.1 General provisions.
16.2 Public reading rooms.
16.3 Requirements for making requests.
16.4 Responsibility for responding to requests.
16.5 Timing of responses to requests.
16.6 Responses to requests.
16.7 Classified information.
16.8 Business information.
16.9 Appeals.
16.10 Preservation of records.
16.11 Fees.
16.12 Other rights and services.

Subpart B—Production or Disclosure in Federal and State Proceedings

16.21 Purpose and scope.
16.22 General prohibition of production or disclosure in Federal and State proceedings in which the United States is not a party.
16.23 General disclosure authority in Federal and State proceedings in which the United States is a party.
16.24 Procedure in the event of a demand where disclosure is not otherwise authorized.
16.25 Final action by the Deputy or Associate Attorney General.
16.26 Considerations in determining whether production or disclosure should be made pursuant to a demand.
16.27 Procedure in the event a department decision concerning a demand is not made prior to the time a response to the demand is required.
16.28 Procedure in the event of an adverse ruling.
16.29 Delegation by Assistant Attorneys General.

APPENDIX TO SUBPART B—REDELEGATION OF AUTHORITY TO THE DEPUTY ASSISTANT ATTORNEY GENERAL FOR LITIGATION, ANTITRUST DIVISION, TO AUTHORIZE PRODUCTION OR DISCLOSURE OF MATERIAL OR INFORMATION

Subpart C—Production of FBI Identification Records in Response to Written Requests by Subjects Thereof

16.30 Purpose and scope.
16.31 Definition of identification record.
16.32 Procedure to obtain an identification record.
16.33 Fee for production of identification record.
16.34 Procedure to obtain change, correction or updating of identification records.

Subpart D—Protection of Privacy and Access to Individual Records Under the Privacy Act of 1974

16.40 General provisions.
16.41 Requests for access to records.
16.42 Responsibility for responding to requests for access to records.
16.43 Responses to requests for access to records.
16.44 Classified information.
16.45 Appeals from denials of requests for access to records.
16.46 Requests for amendment or correction of records.
16.47 Requests for an accounting of record disclosures.
16.48 Preservation of records.
16.49 Fees.
16.50 Notice of court-ordered and emergency disclosures.
16.51 Security of systems of records.
16.52 Contracts for the operation of record systems.
16.53 Use and collection of social security numbers.
16.54 Employee standards of conduct.
16.55 Other rights and services.

Subpart E—Exemption of Records Systems Under the Privacy Act

16.70 Exemption of the Office of the Attorney General System—limited access.
16.71 Exemption of the Office of the Deputy Attorney General System—limited access.
16.72 Exemption of Office of the Associate Attorney General System—limited access.
16.73 Exemption of Office of Legal Policy System—limited access.
16.74 Exemption of Office of Intelligence Policy and Review Systems—limited access.
16.75 Exemption of the Office of the Inspector General Systems/Limited Access.
16.76 Exemption of Justice Management Division.
16.77 Exemption of U.S. Trustee Program System—limited access.
16.78 Exemption of the Special Counsel for Immigration-Related, Unfair Employment Practices Systems.
16.79 Exemption of Pardon Attorney System.
16.80 Exemption of Office of Professional Responsibility System—limited access.
16.81 Exemption of United States Attorneys Systems—limited access.
16.82 Exemption of the National Drug Intelligence Center Data Base—limited access.
16.83 Exemption of the Executive Office for Immigration Review System—limited access.
16.84 Exemption of Immigration Appeals System.
16.85 Exemption of U.S. Parole Commission—limited access.
16.88 Exemption of Antitrust Division Systems—limited access.
16.89 Exemption of Civil Division Systems—limited access.
16.90 Exemption of Civil Rights Division Systems.
16.91 Exemption of Criminal Division Systems—limited access, as indicated.
16.92 Exemption of Environment and Natural Resources Division Systems—limited access.
16.93 Exemption of Tax Division Systems—limited access.
16.96 Exemption of Federal Bureau of Investigation Systems—limited access.
16.97 Exemption of Bureau of Prisons Systems—limited access.
16.98 Exemption of the Drug Enforcement Administration (DEA)—limited access.
16.99 Exemption of the Immigration and Naturalization Service Systems-limited access.
16.100 Exemption of Office of Justice Programs—limited access.
16.101 Exemption of U.S. Marshals Service Systems—limited access, as indicated.
16.102 Exemption of Drug Enforcement Administration and Immigration and Naturalization Service Joint System of Records.
16.103 Exemption of the INTERPOL-United States National Central Bureau (INTERPOL-USNCB) System.
16.104 Exemption of Office of Special Counsel—Waco System.
16.105 Exemption of Foreign Terrorist Tracking Task Force System.
16.106 Exemption of the Bureau of Alcohol, Tobacco, Firearms, and Explosives (ATF)—Limited Access.
16.130 Exemption of Department of Justice Systems: Correspondence Management

Systems for the Department of Justice (DOJ-003); Freedom of Information Act, Privacy Act and Mandatory Declassification Review Requests and Administrative Appeals for the Department of Justice (DOJ-004).
16.131 Exemption of Department of Justice (DOJ)/Nationwide Joint Automated Booking System (JABS), DOJ-005.
16.132 Exemption of Department of Justice System—Personnel Investigation and Security Clearance Records for the Department of Justice (DOJ), DOJ-006.
16.133 Exemption of Department of Justice Regional Data Exchange System (RDEX), DOJ–012.

Subpart F—Public Observation of Parole Commission Meetings

16.200 Definitions.
16.201 Voting by the Commissioners without joint deliberation.
16.202 Open meetings.
16.203 Closed meetings—Formal procedure.
16.204 Public notice.
16.205 Closed meetings—Informal procedures.
16.206 Transcripts, minutes, and miscellaneous documents concerning Commission meetings.
16.207 Public access to nonexempt transcripts and minutes of closed Commission meetings—Documents used at meetings—Record retention.
16.208 Annual report.

Subpart G—Access to Documents by Former Employees of the Department

16.300 Access to documents for the purpose of responding to an official inquiry.
16.301 Limitations.
APPENDIX I TO PART 16—COMPONENTS OF THE DEPARTMENT OF JUSTICE

AUTHORITY: 5 U.S.C. 301, 552, 552a, 552b(g), 553; 18 U.S.C. 4203(a)(1); 28 U.S.C. 509, 510, 534; 31 U.S.C. 3717, 9701.

Subpart A—Procedures for Disclosure of Records Under the Freedom of Information Act

SOURCE: Order No. 2156–98, 63 FR 29593, June 1, 1998, unless otherwise noted.

§ 16.1 General provisions.

(a) This subpart contains the rules that the Department of Justice follows in processing requests for records under the Freedom of Information Act (FOIA), 5 U.S.C. 552. These rules should be read together with the FOIA, which provides additional information about access to records maintained by the Department. Requests made by individuals for records about themselves under the Privacy Act of 1974, 5 U.S.C. 552a, which are processed under subpart D of this part, are processed under this subpart also. Information routinely provided to the public as part of a regular Department activity (for example, press releases issued by the Office of Public Affairs) may be provided to the public without following this subpart. As a matter of policy, the Department makes discretionary disclosures of records or information exempt from disclosure under the FOIA whenever disclosure would not foreseeably harm an interest protected by a FOIA exemption, but this policy does not create any right enforceable in court.

(b) As used in this subpart, *component* means each separate bureau, office, board, division, commission, service, or administration of the Department of Justice.

§ 16.2 Public reading rooms.

(a) The Department maintains public reading rooms that contain the records that the FOIA requires to be made regularly available for public inspection and copying. Each Department component is responsible for determining which of the records it generates are required to be made available in this way and for making those records available either in its own reading room or in the Department's central reading room. Each component shall maintain and make available for public inspection and copying a current subject-matter index of its reading room records. Each index shall be updated regularly, at least quarterly, with respect to newly included records.

(b) The Department maintains public reading rooms or areas at the locations listed below:

(1) Bureau of Prisons—on the Seventh Floor, 500 First Street, NW., Washington, DC;

(2) Civil Rights Division—in Room 930, 320 First Street, NW., Washington, DC;

(3) Community Relations Service—in Suite 2000, 600 E Street, NW., Washington, DC;

(4) Drug Enforcement Administration—in Room W–7216, 700 Army Navy Drive, Arlington, Virginia;

(5) Executive Office for Immigration Review (Board of Immigration Appeals)—in Suite 2400, 5107 Leesburg Pike, Falls Church, Virginia;

(6) Federal Bureau of Investigation—at the J. Edgar Hoover Building, 935 Pennsylvania Avenue, NW., Washington, DC;

(7) Foreign Claims Settlement Commission—in Room 6002, 600 E Street, NW., Washington, DC;

(8) Immigration and Naturalization Service—425 I Street, NW., Washington, DC;

(9) Office of Justice Programs—in Room 5430, 810 Seventh Street, NW., Washington, DC;

(10) Pardon Attorney—on the Fourth Floor, 500 First Street, NW., Washington, DC;

(11) Bureau of Alcohol, Tobacco, Firearms, and Explosives—650 Massachusetts Avenue, NW., Washington, DC;

(12) United States Attorneys and United States Marshals—at the principal offices of the United States Attorneys and the United States Marshals, which are listed in most telephone books; and

(13) All other components of the Department of Justice—in Room 6505 at the Main Justice Building, 950 Pennsylvania Avenue, NW., Washington, DC.

(c) Components shall also make reading room records created by the Department on or after November 1, 1996, available electronically at the Department's World Wide Web site (which can be found at *http://www.usdoj.gov*), through use of the Department's ''Freedom of Information Act Home Page.'' This includes each component's index of its reading room records, which will indicate which records are available electronically.

[Order No. 2156–98, 63 FR 29593, June 1, 1998; 63 FR 51401, Sept. 25, 1998, as amended by Order No. 2650–2003, 68 FR 4928, Jan. 31, 2003]

§ 16.3 Requirements for making requests.

(a) *How made and addressed.* You may make a request for records of the Department of Justice by writing directly to the Department component that maintains those records. You may find the Department's ''Freedom of Information Act Reference Guide''—which is available electronically at the Department's World Wide Web site, and is available in paper form as well—helpful in making your request. For additional information about the FOIA, you may refer directly to the statute. If you are making a request for records about yourself, see § 16.41(d) for additional requirements. If you are making a request for records about another individual, either a written authorization signed by that individual permitting disclosure of those records to you or proof that that individual is deceased (for example, a copy of a death certificate or an obituary) will help the processing of your request. Your request should be sent to the component's FOIA office at the address listed in appendix I to part 16. In most cases, your FOIA request should be sent to a component's central FOIA office. For records held by a field office of the Federal Bureau of Investigation (FBI) or the Immigration and Naturalization Service (INS), however, you must write directly to that FBI or INS field office address, which can be found in most telephone books or by calling the component's central FOIA office. (The functions of each component are summarized in part 0 of this title and in the description of the Department and its components in the ''United States Government Manual,'' which is issued annually and is available in most libraries, as well as for sale from the Government Printing Office's Superintendent of Documents. This manual also can be accessed electronically at the Government Printing Office's World Wide Web site (which can be found at *http://www.access.gpo.gov/su_docs*).) If you cannot determine where within the Department to send your request, you may send it to the FOIA/PA Mail Referral Unit, Justice Management Division, U.S. Department of Justice, 950 Pennsylvania Avenue, NW., Washington, DC 20530–0001. That office will forward your request to the component(s) it believes most likely to have the records that you want. Your request will be considered received as of the date it is received by the proper component's FOIA office. For the quickest possible handling, you

should mark both your request letter and the envelope ''Freedom of Information Act Request.''

(b) *Description of records sought.* You must describe the records that you seek in enough detail to enable Department personnel to locate them with a reasonable amount of effort. Whenever possible, your request should include specific information about each record sought, such as the date, title or name, author, recipient, and subject matter of the record. In addition, if you want records about a court case, you should provide the title of the case, the court in which the case was filed, and the nature of the case. If known, you should include any file designations or descriptions for the records that you want. As a general rule, the more specific you are about the records or type of records that you want, the more likely the Department will be able to locate those records in response to your request. If a component determines that your request does not reasonably describe records, it shall tell you either what additional information is needed or why your request is otherwise insufficient. The component also shall give you an opportunity to discuss your request so that you may modify it to meet the requirements of this section. If your request does not reasonably describe the records you seek, the agency's response to your request may be delayed.

(c) *Agreement to pay fees.* If you make a FOIA request, it shall be considered an agreement by you to pay all applicable fees charged under §16.11, up to $25.00, unless you seek a waiver of fees. The component responsible for responding to your request ordinarily will confirm this agreement in an acknowledgement letter. When making a request, you may specify a willingness to pay a greater or lesser amount.

[Order No. 2156–98, 63 FR 29593, June 1, 1998; 63 FR 51401, Sept. 25, 1998]

§16.4 Responsibility for responding to requests.

(a) *In general.* Except as stated in paragraphs (c), (d), and (e) of this section, the component that first receives a request for a record and has possession of that record is the component responsible for responding to the request. In determining which records are responsive to a request, a component ordinarily will include only records in its possession as of the date the component begins its search for them. If any other date is used, the component shall inform the requester of that date.

(b) *Authority to grant or deny requests.* The head of a component, or the component head's designee, is authorized to grant or deny any request for a record of that component.

(c) *Consultations and referrals.* When a component receives a request for a record in its possession, it shall determine whether another component, or another agency of the Federal Government, is better able to determine whether the record is exempt from disclosure under the FOIA and, if so, whether it should be disclosed as a matter of administrative discretion. If the receiving component determines that it is best able to process the record in response to the request, then it shall do so. If the receiving component determines that it is not best able to process the record, then it shall either:

(1) Respond to the request regarding that record, after consulting with the component or agency best able to determine whether to disclose it and with any other component or agency that has a substantial interest in it; or

(2) Refer the responsibility for responding to the request regarding that record to the component best able to determine whether to disclose it, or to another agency that originated the record (but only if that agency is subject to the FOIA). Ordinarily, the component or agency that originated a record will be presumed to be best able to determine whether to disclose it.

(d) *Law enforcement information.* Whenever a request is made for a record containing information that relates to an investigation of a possible violation of law and was originated by another component or agency, the receiving component shall either refer the responsibility for responding to the request regarding that information to that other component or agency or consult with that other component or agency.

(e) *Classified information.* Whenever a request is made for a record containing information that has been classified, or may be appropriate for classification, by another component or agency under Executive Order 12958 or any other executive order concerning the classification of records, the receiving component shall refer the responsibility for responding to the request regarding that information to the component or agency that classified the information, should consider the information for classification, or has the primary interest in it, as appropriate. Whenever a record contains information that has been derivatively classified by a component because it contains information classified by another component or agency, the component shall refer the responsibility for responding to the request regarding that information to the component or agency that classified the underlying information.

(f) *Notice of referral.* Whenever a component refers all or any part of the responsibility for responding to a request to another component or agency, it ordinarily shall notify the requester of the referral and inform the requester of the name of each component or agency to which the request has been referred and of the part of the request that has been referred.

(g) *Timing of responses to consultations and referrals.* All consultations and referrals will be handled according to the date the FOIA request initially was received by the first component or agency, not any later date.

(h) *Agreements regarding consultations and referrals.* Components may make agreements with other components or agencies to eliminate the need for consultations or referrals for particular types of records.

§ 16.5 Timing of responses to requests.

(a) *In general.* Components ordinarily shall respond to requests according to their order of receipt.

(b) *Multitrack processing.* (1) A component may use two or more processing tracks by distinguishing between simple and more complex requests based on the amount of work and/or time needed to process the request, including through limits based on the number of pages involved. If a component does so, it shall advise requesters in its slower track(s) of the limits of its faster track(s).

(2) A component using multitrack processing may provide requesters in its slower track(s) with an opportunity to limit the scope of their requests in order to qualify for faster processing within the specified limits of the component's faster track(s). A component doing so will contact the requester either by telephone or by letter, whichever is more efficient in each case.

(c) *Unusual circumstances.* (1) Where the statutory time limits for processing a request cannot be met because of ''unusual circumstances,'' as defined in the FOIA, and the component determines to extend the time limits on that basis, the component shall as soon as practicable notify the requester in writing of the unusual circumstances and of the date by which processing of the request can be expected to be completed. Where the extension is for more than ten working days, the component shall provide the requester with an opportunity either to modify the request so that it may be processed within the time limits or to arrange an alternative time period with the component for processing the request or a modified request.

(2) Where a component reasonably believes that multiple requests submitted by a requester, or by a group of requesters acting in concert, constitute a single request that would otherwise involve unusual circumstances, and the requests involve clearly related matters, they may be aggregated. Multiple requests involving unrelated matters will not be aggregated.

(d) *Expedited processing.* (1) Requests and appeals will be taken out of order and given expedited treatment whenever it is determined that they involve:

(i) Circumstances in which the lack of expedited treatment could reasonably be expected to pose an imminent threat to the life or physical safety of an individual;

(ii) An urgency to inform the public about an actual or alleged federal government activity, if made by a person primarily engaged in disseminating information;

(iii) The loss of substantial due process rights; or

(iv) A matter of widespread and exceptional media interest in which there exist possible questions about the government's integrity which affect public confidence.

(2) A request for expedited processing may be made at the time of the initial request for records or at any later time. For a prompt determination, a request for expedited processing must be received by the proper component. Requests based on the categories in paragraphs (d)(1)(i), (ii), and (iii) of this section must be submitted to the component that maintains the records requested. Requests based on the category in paragraph (d)(1)(iv) of this section must be submitted to the Director of Public Affairs, whose address is: Office of Public Affairs, U.S. Department of Justice, Room 1128, 950 Pennsylvania Avenue, NW., Washington DC 20530–0001. A component that receives a request that must be handled by the Office of Public Affairs shall forward it immediately to that office by hand-delivery or fax.

(3) A requester who seeks expedited processing must submit a statement, certified to be true and correct to the best of that person's knowledge and belief, explaining in detail the basis for requesting expedited processing. For example, a requester within the category in paragraph (d)(1)(ii) of this section, if not a full-time member of the news media, must establish that he or she is a person whose main professional activity or occupation is information dissemination, though it need not be his or her sole occupation. A requester within the category in paragraph (d)(1)(ii) of this section also must establish a particular urgency to inform the public about the government activity involved in the request, beyond the public's right to know about government activity generally. The formality of certification may be waived as a matter of administrative discretion.

(4) Within ten calendar days of its receipt of a request for expedited processing, the proper component shall decide whether to grant it and shall notify the requester of the decision. If a request for expedited treatment is granted, the request shall be given priority and shall be processed as soon as practicable. If a request for expedited processing is denied, any appeal of that decision shall be acted on expeditiously.

§ 16.6 Responses to requests.

(a) *Acknowledgements of requests.* On receipt of a request, a component ordinarily shall send an acknowledgement letter to the requester which shall confirm the requester's agreement to pay fees under § 16.3(c) and provide an assigned request number for further reference.

(b) *Grants of requests.* Ordinarily, a component shall have twenty business days from when a request is received to determine whether to grant or deny the request. Once a component makes a determination to grant a request in whole or in part, it shall notify the requester in writing. The component shall inform the requester in the notice of any fee charged under § 16.11 and shall disclose records to the requester promptly on payment of any applicable fee. Records disclosed in part shall be marked or annotated to show the amount of information deleted unless doing so would harm an interest protected by an applicable exemption. The location of the information deleted also shall be indicated on the record, if technically feasible.

(c) *Adverse determinations of requests.* A component making an adverse determination denying a request in any respect shall notify the requester of that determination in writing. Adverse determinations, or denials of requests, consist of: a determination to withhold any requested record in whole or in part; a determination that a requested record does not exist or cannot be located; a determination that a record is not readily reproducible in the form or format sought by the requester; a determination that what has been requested is not a record subject to the FOIA; a determination on any disputed fee matter, including a denial of a request for a fee waiver; and a denial of a request for expedited treatment. The denial letter shall be signed by the head of the component, or the component head's designee, and shall include:

(1) The name and title or position of the person responsible for the denial;

(2) A brief statement of the reason(s) for the denial, including any FOIA exemption applied by the component in denying the request;

(3) An estimate of the volume of records or information withheld, in number of pages or in some other reasonable form of estimation. This estimate does not need to be provided if the volume is otherwise indicated through deletions on records disclosed in part, or if providing an estimate would harm an interest protected by an applicable exemption; and

(4) A statement that the denial may be appealed under §16.9(a) and a description of the requirements of §16.9(a).

§ 16.7 Classified information.

In processing a request for information that is classified under Executive Order 12958 (3 CFR, 1996 Comp., p. 333) or any other executive order, the originating component shall review the information to determine whether it should remain classified. Information determined to no longer require classification shall not be withheld on the basis of Exemption 1 of the FOIA. On receipt of any appeal involving classified information, the Office of Information and Privacy shall take appropriate action to ensure compliance with part 17 of this title.

§ 16.8 Business information.

(a) *In general.* Business information obtained by the Department from a submitter will be disclosed under the FOIA only under this section.

(b) *Definitions.* For purposes of this section:

(1) *Business information* means commercial or financial information obtained by the Department from a submitter that may be protected from disclosure under Exemption 4 of the FOIA.

(2) *Submitter* means any person or entity from whom the Department obtains business information, directly or indirectly. The term includes corporations; state, local, and tribal governments; and foreign governments.

(c) *Designation of business information.* A submitter of business information will use good-faith efforts to designate, by appropriate markings, either at the time of submission or at a reasonable time thereafter, any portions of its submission that it considers to be protected from disclosure under Exemption 4. These designations will expire ten years after the date of the submission unless the submitter requests, and provides justification for, a longer designation period.

(d) *Notice to submitters.* A component shall provide a submitter with prompt written notice of a FOIA request or administrative appeal that seeks its business information wherever required under paragraph (e) of this section, except as provided in paragraph (h) of this section, in order to give the submitter an opportunity to object to disclosure of any specified portion of that information under paragraph (f) of this section. The notice shall either describe the business information requested or include copies of the requested records or record portions containing the information. When notification of a voluminous number of submitters is required, notification may be made by posting or publishing the notice in a place reasonably likely to accomplish it.

(e) *Where notice is required.* Notice shall be given to a submitter wherever:

(1) The information has been designated in good faith by the submitter as information considered protected from disclosure under Exemption 4; or

(2) The component has reason to believe that the information may be protected from disclosure under Exemption 4.

(f) *Opportunity to object to disclosure.* A component will allow a submitter a reasonable time to respond to the notice described in paragraph (d) of this section and will specify that time period within the notice. If a submitter has any objection to disclosure, it is required to submit a detailed written statement. The statement must specify all grounds for withholding any portion of the information under any exemption of the FOIA and, in the case of Exemption 4, it must show why the information is a trade secret or commercial or financial information that is privileged or confidential. In the event that a submitter fails to respond to the notice within the time specified in it, the submitter will be considered to have no

objection to disclosure of the information. Information provided by the submitter that is not received by the component until after its disclosure decision has been made shall not be considered by the component. Information provided by a submitter under this paragraph may itself be subject to disclosure under the FOIA.

(g) *Notice of intent to disclose.* A component shall consider a submitter's objections and specific grounds for nondisclosure in deciding whether to disclose business information. Whenever a component decides to disclose business information over the objection of a submitter, the component shall give the submitter written notice, which shall include:

(1) A statement of the reason(s) why each of the submitter's disclosure objections was not sustained;

(2) A description of the business information to be disclosed; and

(3) A specified disclosure date, which shall be a reasonable time subsequent to the notice.

(h) *Exceptions to notice requirements.* The notice requirements of paragraphs (d) and (g) of this section shall not apply if:

(1) The component determines that the information should not be disclosed;

(2) The information lawfully has been published or has been officially made available to the public;

(3) Disclosure of the information is required by statute (other than the FOIA) or by a regulation issued in accordance with the requirements of Executive Order 12600 (3 CFR, 1988 Comp., p. 235); or

(4) The designation made by the submitter under paragraph (c) of this section appears obviously frivolous—except that, in such a case, the component shall, within a reasonable time prior to a specified disclosure date, give the submitter written notice of any final decision to disclose the information.

(i) *Notice of FOIA lawsuit.* Whenever a requester files a lawsuit seeking to compel the disclosure of business information, the component shall promptly notify the submitter.

(j) *Corresponding notice to requesters.* Whenever a component provides a submitter with notice and an opportunity to object to disclosure under paragraph (d) of this section, the component shall also notify the requester(s). Whenever a component notifies a submitter of its intent to disclose requested information under paragraph (g) of this section, the component shall also notify the requester(s). Whenever a submitter files a lawsuit seeking to prevent the disclosure of business information, the component shall notify the requester(s).

[Order No. 2156–98, 63 FR 29593, June 1, 1998; 63 FR 51401, Sept. 25, 1998]

§ 16.9 Appeals.

(a) *Appeals of adverse determinations.* If you are dissatisfied with a component's response to your request, you may appeal an adverse determination denying your request, in any respect, to the Office of Information and Privacy, U.S. Department of Justice, Flag Building, Suite 570, Washington, DC 20530–0001. You must make your appeal in writing and it must be received by the Office of Information and Privacy within 60 days of the date of the letter denying your request. Your appeal letter may include as much or as little related information as you wish, as long as it clearly identifies the component determination (including the assigned request number, if known) that you are appealing. For the quickest possible handling, you should mark your appeal letter and the envelope ''Freedom of Information Act Appeal.'' Unless the Attorney General directs otherwise, a Director of the Office of Information and Privacy will act on behalf of the Attorney General on all appeals under this section, except that:

(1) In the case of an adverse determination by the Deputy Attorney General or the Associate Attorney General, the Attorney General or the Attorney General's designee will act on the appeal;

(2) An adverse determination by the Attorney General will be the final action of the Department; and

(3) An appeal ordinarily will not be acted on if the request becomes a matter of FOIA litigation.

(b) *Responses to appeals.* The decision on your appeal will be made in writing.

A decision affirming an adverse determination in whole or in part shall contain a statement of the reason(s) for the affirmance, including any FOIA exemption(s) applied, and will inform you of the FOIA provisions for court review of the decision. If the adverse determination is reversed or modified on appeal, in whole or in part, you will be notified in a written decision and your request will be reprocessed in accordance with that appeal decision.

(c) *When appeal is required.* If you wish to seek review by a court of any adverse determination, you must first appeal it under this section.

§ 16.10 Preservation of records.

Each component shall preserve all correspondence pertaining to the requests that it receives under this subpart, as well as copies of all requested records, until disposition or destruction is authorized by title 44 of the United States Code or the National Archives and Records Administration's General Records Schedule 14. Records will not be disposed of while they are the subject of a pending request, appeal, or lawsuit under the FOIA.

§ 16.11 Fees.

(a) *In general.* Components shall charge for processing requests under the FOIA in accordance with paragraph (c) of this section, except where fees are limited under paragraph (d) of this section or where a waiver or reduction of fees is granted under paragraph (k) of this section. A component ordinarily shall collect all applicable fees before sending copies of requested records to a requester. Requesters must pay fees by check or money order made payable to the Treasury of the United States.

(b) *Definitions.* For purposes of this section:

(1) *Commercial use request* means a request from or on behalf of a person who seeks information for a use or purpose that furthers his or her commercial, trade, or profit interests, which can include furthering those interests through litigation. Components shall determine, whenever reasonably possible, the use to which a requester will put the requested records. When it appears that the requester will put the records to a commercial use, either because of the nature of the request itself or because a component has reasonable cause to doubt a requester's stated use, the component shall provide the requester a reasonable opportunity to submit further clarification.

(2) *Direct costs* means those expenses that an agency actually incurs in searching for and duplicating (and, in the case of commercial use requests, reviewing) records to respond to a FOIA request. Direct costs include, for example, the salary of the employee performing the work (the basic rate of pay for the employee, plus 16 percent of that rate to cover benefits) and the cost of operating duplication machinery. Not included in direct costs are overhead expenses such as the costs of space and heating or lighting of the facility in which the records are kept.

(3) *Duplication* means the making of a copy of a record, or of the information contained in it, necessary to respond to a FOIA request. Copies can take the form of paper, microform, audiovisual materials, or electronic records (for example, magnetic tape or disk), among others. Components shall honor a requester's specified preference of form or format of disclosure if the record is readily reproducible with reasonable efforts in the requested form or format by the office responding to the request.

(4) *Educational institution* means a preschool, a public or private elementary or secondary school, an institution of undergraduate higher education, an institution of graduate higher education, an institution of professional education, or an institution of vocational education, that operates a program of scholarly research. To be in this category, a requester must show that the request is authorized by and is made under the auspices of a qualifying institution and that the records are not sought for a commercial use but are sought to further scholarly research.

(5) *Noncommercial scientific institution* means an institution that is not operated on a ''commercial'' basis, as that term is defined in paragraph (b)(1) of this section, and that is operated solely for the purpose of conducting scientific research the results of which are not intended to promote any particular product or industry. To be in this category, a requester must show that the

request is authorized by and is made under the auspices of a qualifying institution and that the records are not sought for a commercial use but are sought to further scientific research.

(6) *Representative of the news media,* or news media requester, means any person actively gathering news for an entity that is organized and operated to publish or broadcast news to the public. The term ''news'' means information that is about current events or that would be of current interest to the public. Examples of news media entities include television or radio stations broadcasting to the public at large and publishers of periodicals (but only in those instances where they can qualify as disseminators of ''news'') who make their products available for purchase or subscription by the general public. For ''freelance'' journalists to be regarded as working for a news organization, they must demonstrate a solid basis for expecting publication through that organization. A publication contract would be the clearest proof, but components shall also look to the past publication record of a requester in making this determination. To be in this category, a requester must not be seeking the requested records for a commercial use. However, a request for records supporting the news-dissemination function of the requester shall not be considered to be for a commercial use.

(7) *Review* means the examination of a record located in response to a request in order to determine whether any portion of it is exempt from disclosure. It also includes processing any record for disclosure—for example, doing all that is necessary to redact it and prepare it for disclosure. Review costs are recoverable even if a record ultimately is not disclosed. Review time includes time spent considering any formal objection to disclosure made by a business submitter under § 16.8, but does not include time spent resolving general legal or policy issues regarding the application of exemptions.

(8) *Search* means the process of looking for and retrieving records or information responsive to a request. It includes page-by-page or line-by-line identification of information within records and also includes reasonable efforts to locate and retrieve information from records maintained in electronic form or format. Components shall ensure that searches are done in the most efficient and least expensive manner reasonably possible. For example, components shall not search line-by-line where duplicating an entire document would be quicker and less expensive.

(c) *Fees.* In responding to FOIA requests, components shall charge the following fees unless a waiver or reduction of fees has been granted under paragraph (k) of this section:

(1) *Search.* (i) Search fees shall be charged for all requests—other than requests made by educational institutions, noncommercial scientific institutions, or representatives of the news media—subject to the limitations of paragraph (d) of this section. Components may charge for time spent searching even if they do not locate any responsive record or if they withhold the record(s) located as entirely exempt from disclosure.

(ii) For each quarter hour spent by clerical personnel in searching for and retrieving a requested record, the fee will be $4.00. Where a search and retrieval cannot be performed entirely by clerical personnel—for example, where the identification of records within the scope of a request requires the use of professional personnel—the fee will be $7.00 for each quarter hour of search time spent by professional personnel. Where the time of managerial personnel is required, the fee will be $10.25 for each quarter hour of time spent by those personnel.

(iii) For computer searches of records, requesters will be charged the direct costs of conducting the search, although certain requesters (as provided in paragraph (d)(1) of this section) will be charged no search fee and certain other requesters (as provided in paragraph (d)(3) of this section) will be entitled to the cost equivalent of two hours of manual search time without charge. These direct costs will include the cost of operating a central processing unit for that portion of operating time that is directly attributable to searching for responsive records, as well as the costs of operator/programmer salary apportionable to the search.

(2) *Duplication*. Duplication fees will be charged to all requesters, subject to the limitations of paragraph (d) of this section. For a paper photocopy of a record (no more than one copy of which need be supplied), the fee will be ten cents per page. For copies produced by computer, such as tapes or printouts, components will charge the direct costs, including operator time, of producing the copy. For other forms of duplication, components will charge the direct costs of that duplication.

(3) *Review*. Review fees will be charged to requesters who make a commercial use request. Review fees will be charged only for the initial record review—in other words, the review done when a component determines whether an exemption applies to a particular record or record portion at the initial request level. No charge will be made for review at the administrative appeal level for an exemption already applied. However, records or record portions withheld under an exemption that is subsequently determined not to apply may be reviewed again to determine whether any other exemption not previously considered applies; the costs of that review are chargeable where it is made necessary by such a change of circumstances. Review fees will be charged at the same rates as those charged for a search under paragraph (c)(1)(ii) of this section.

(d) *Limitations on charging fees*. (1) No search fee will be charged for requests by educational institutions, noncommercial scientific institutions, or representatives of the news media.

(2) No search fee or review fee will be charged for a quarter-hour period unless more than half of that period is required for search or review.

(3) Except for requesters seeking records for a commercial use, components will provide without charge:

(i) The first 100 pages of duplication (or the cost equivalent); and

(ii) The first two hours of search (or the cost equivalent).

(4) Whenever a total fee calculated under paragraph (c) of this section is $14.00 or less for any request, no fee will be charged.

(5) The provisions of paragraphs (d)(3) and (4) of this section work together. This means that for requesters other than those seeking records for a commercial use, no fee will be charged unless the cost of search in excess of two hours plus the cost of duplication in excess of 100 pages totals more than $14.00.

(e) *Notice of anticipated fees in excess of $25.00*. When a component determines or estimates that the fees to be charged under this section will amount to more than $25.00, the component shall notify the requester of the actual or estimated amount of the fees, unless the requester has indicated a willingness to pay fees as high as those anticipated. If only a portion of the fee can be estimated readily, the component shall advise the requester that the estimated fee may be only a portion of the total fee. In cases in which a requester has been notified that actual or estimated fees amount to more than $25.00, the request shall not be considered received and further work shall not be done on it until the requester agrees to pay the anticipated total fee. Any such agreement should be memorialized in writing. A notice under this paragraph will offer the requester an opportunity to discuss the matter with Department personnel in order to reformulate the request to meet the requester's needs at a lower cost.

(f) *Charges for other services*. Apart from the other provisions of this section, when a component chooses as a matter of administrative discretion to provide a special service—such as certifying that records are true copies or sending them by other than ordinary mail—the direct costs of providing the service ordinarily will be charged.

(g) *Charging interest*. Components may charge interest on any unpaid bill starting on the 31st day following the date of billing the requester. Interest charges will be assessed at the rate provided in 31 U.S.C. 3717 and will accrue from the date of the billing until payment is received by the component. Components will follow the provisions of the Debt Collection Act of 1982 (Pub. L. 97–365, 96 Stat. 1749), as amended, and its administrative procedures, including the use of consumer reporting agencies, collection agencies, and offset.

(h) *Aggregating requests*. Where a component reasonably believes that a requester or a group of requesters acting together is attempting to divide a request into a series of requests for the purpose of avoiding fees, the component may aggregate those requests and charge accordingly. Components may presume that multiple requests of this type made within a 30-day period have been made in order to avoid fees. Where requests are separated by a longer period, components will aggregate them only where there exists a solid basis for determining that aggregation is warranted under all the circumstances involved. Multiple requests involving unrelated matters will not be aggregated.

(i) *Advance payments*. (1) For requests other than those described in paragraphs (i)(2) and (3) of this section, a component shall not require the requester to make an advance payment—in other words, a payment made before work is begun or continued on a request. Payment owed for work already completed (i.e., a prepayment before copies are sent to a requester) is not an advance payment.

(2) Where a component determines or estimates that a total fee to be charged under this section will be more than $250.00, it may require the requester to make an advance payment of an amount up to the amount of the entire anticipated fee before beginning to process the request, except where it receives a satisfactory assurance of full payment from a requester that has a history of prompt payment.

(3) Where a requester has previously failed to pay a properly charged FOIA fee to any component or agency within 30 days of the date of billing, a component may require the requester to pay the full amount due, plus any applicable interest, and to make an advance payment of the full amount of any anticipated fee, before the component begins to process a new request or continues to process a pending request from that requester.

(4) In cases in which a component requires advance payment or payment due under paragraph (i)(2) or (3) of this section, the request shall not be considered received and further work will not be done on it until the required payment is received.

(j) *Other statutes specifically providing for fees*. The fee schedule of this section does not apply to fees charged under any statute that specifically requires an agency to set and collect fees for particular types of records. Where records responsive to requests are maintained for distribution by agencies operating such statutorily based fee schedule programs, components will inform requesters of the steps for obtaining records from those sources so that they may do so most economically.

(k) *Requirements for waiver or reduction of fees*. (1) Records responsive to a request will be furnished without charge or at a charge reduced below that established under paragraph (c) of this section where a component determines, based on all available information, that the requester has demonstrated that:

(i) Disclosure of the requested information is in the public interest because it is likely to contribute significantly to public understanding of the operations or activities of the government, and

(ii) Disclosure of the information is not primarily in the commercial interest of the requester.

(2) To determine whether the first fee waiver requirement is met, components will consider the following factors:

(i) *The subject of the request: Whether the subject of the requested records concerns ''the operations or activities of the government.''* The subject of the requested records must concern identifiable operations or activities of the federal government, with a connection that is direct and clear, not remote or attenuated.

(ii) *The informative value of the information to be disclosed: Whether the disclosure is ''likely to contribute'' to an understanding of government operations or activities*. The disclosable portions of the requested records must be meaningfully informative about government operations or activities in order to be ''likely to contribute'' to an increased public understanding of those operations or activities. The disclosure of information that already is in the public domain, in either a duplicative or a substantially identical form, would not

be as likely to contribute to such understanding where nothing new would be added to the public's understanding.

(iii) *The contribution to an understanding of the subject by the public likely to result from disclosure: Whether disclosure of the requested information will contribute to ''public understanding.''* The disclosure must contribute to the understanding of a reasonably broad audience of persons interested in the subject, as opposed to the individual understanding of the requester. A requester's expertise in the subject area and ability and intention to effectively convey information to the public shall be considered. It shall be presumed that a representative of the news media will satisfy this consideration.

(iv) *The significance of the contribution to public understanding: Whether the disclosure is likely to contribute ''significantly'' to public understanding of government operations or activities.* The public's understanding of the subject in question, as compared to the level of public understanding existing prior to the disclosure, must be enhanced by the disclosure to a significant extent. Components shall not make value judgments about whether information that would contribute significantly to public understanding of the operations or activities of the government is ''important'' enough to be made public.

(3) To determine whether the second fee waiver requirement is met, components will consider the following factors:

(i) *The existence and magnitude of a commercial interest: Whether the requester has a commercial interest that would be furthered by the requested disclosure.* Components shall consider any commercial interest of the requester (with reference to the definition of ''commercial use'' in paragraph (b)(1) of this section), or of any person on whose behalf the requester may be acting, that would be furthered by the requested disclosure. Requesters shall be given an opportunity in the administrative process to provide explanatory information regarding this consideration.

(ii) *The primary interest in disclosure: Whether any identified commercial interest of the requester is sufficiently large, in comparison with the public interest in disclosure, that disclosure is ''primarily in the commercial interest of the requester.''* A fee waiver or reduction is justified where the public interest standard is satisfied and that public interest is greater in magnitude than that of any identified commercial interest in disclosure. Components ordinarily shall presume that where a news media requester has satisfied the public interest standard, the public interest will be the interest primarily served by disclosure to that requester. Disclosure to data brokers or others who merely compile and market government information for direct economic return shall not be presumed to primarily serve the public interest.

(4) Where only some of the records to be released satisfy the requirements for a waiver of fees, a waiver shall be granted for those records.

(5) Requests for the waiver or reduction of fees should address the factors listed in paragraphs (k)(2) and (3) of this section, insofar as they apply to each request. Components will exercise their discretion to consider the cost-effectiveness of their investment of administrative resources in this decision-making process, however, in deciding to grant waivers or reductions of fees.

[Order No. 2156–98, 63 FR 29593, June 1, 1998; 63 FR 34965, June 26, 1998; 63 FR 36295, July 2, 1998; 63 FR 51401, Sept. 25, 1998]

§ 16.12 Other rights and services.

Nothing in this subpart shall be construed to entitle any person, as of right, to any service or to the disclosure of any record to which such person is not entitled under the FOIA.

Subpart B—Production or Disclosure in Federal and State Proceedings

SOURCE: Order No. 919–80, 45 FR 83210, Dec. 18, 1980, unless otherwise noted.

§ 16.21 Purpose and scope.

(a) This subpart sets forth procedures to be followed with respect to the production or disclosure of any material contained in the files of the Department, any information relating to material contained in the files of the Department, or any information acquired

by any person while such person was an employee of the Department as a part of the performance of that person's official duties or because of that person's official status:

(1) In all federal and state proceedings in which the United States is a party; and

(2) In all federal and state proceedings in which the United States is not a party, including any proceedings in which the Department is representing a government employee solely in that employee's individual capacity, when a subpoena, order, or other demand (hereinafter collectively referred to as a ''demand'') of a court or other authority is issued for such material or information.

(b) For purposes of this subpart, the term *employee of the Department* includes all officers and employees of the United States appointed by, or subject to the supervision, jurisdiction, or control of the Attorney General of the United States, including U.S. Attorneys, U.S. Marshals, U.S. Trustees and members of the staffs of those officials.

(c) Nothing in this subpart is intended to impede the appropriate disclosure, in the absence of a demand, of information by Department law enforcement agencies to federal, state, local and foreign law enforcement, prosecutive, or regulatory agencies.

(d) This subpart is intended only to provide guidance for the internal operations of the Department of Justice, and is not intended to, and does not, and may not be relied upon to create any right or benefit, substantive or procedural, enforceable at law by a party against the United States.

§ 16.22 General prohibition of production or disclosure in Federal and State proceedings in which the United States is not a party.

(a) In any federal or state case or matter in which the United States is not a party, no employee or former employee of the Department of Justice shall, in response to a demand, produce any material contained in the files of the Department, or disclose any information relating to or based upon material contained in the files of the Department, or disclose any information or produce any material acquired as part of the performance of that person's official duties or because of that person's official status without prior approval of the proper Department official in accordance with §§ 16.24 and 16.25 of this part.

(b) Whenever a demand is made upon an employee or former employee as described in paragraph (a) of this section, the employee shall immediately notify the U.S. Attorney for the district where the issuing authority is located. The responsible United States Attorney shall follow procedures set forth in § 16.24 of this part.

(c) If oral testimony is sought by a demand in any case or matter in which the United States is not a party, an affidavit, or, if that is not feasible, a statement by the party seeking the testimony or by his attorney, setting forth a summary of the testimony sought and its relevance to the proceeding, must be furnished to the responsible U.S. Attorney. Any authorization for testimony by a present or former employee of the Department shall be limited to the scope of the demand as summarized in such statement.

(d) When information other than oral testimony is sought by a demand, the responsible U.S. Attorney shall request a summary of the information sought and its relevance to the proceeding.

§ 16.23 General disclosure authority in Federal and State proceedings in which the United States is a party.

(a) Every attorney in the Department of Justice in charge of any case or matter in which the United States is a party is authorized, after consultation with the ''originating component'' as defined in § 16.24(a) of this part, to reveal and furnish to any person, including an actual or prospective witness, a grand jury, counsel, or a court, either during or preparatory to a proceeding, such testimony, and relevant unclassified material, documents, or information secured by any attorney, or investigator of the Department of Justice, as such attorney shall deem necessary or desirable to the discharge of the attorney's official duties: *Provided,* Such an attorney shall consider, with respect to any disclosure, the factors set

forth in § 16.26(a) of this part: *And further provided,* An attorney shall not reveal or furnish any material, documents, testimony or information when, in the attorney's judgment, any of the factors specified in § 16.26(b) exists, without the express prior approval by the Assistant Attorney General in charge of the division responsible for the case or proceeding, the Director of the Executive Office for United States Trustees (hereinafter referred to as ''the EOUST''), or such persons' designees.

(b) An attorney may seek higher level review at any stage of a proceeding, including prior to the issuance of a court order, when the attorney determines that a factor specified in § 16.26(b) exists or foresees that higher level approval will be required before disclosure of the information or testimony in question. Upon referral of a matter under this subsection, the responsible Assistant Attorney General, the Director of EOUST, or their designees shall follow procedures set forth in § 16.24 of this part.

(c) If oral testimony is sought by a demand in a case or matter in which the United States is a party, an affidavit, or, if that is not feasible, a statement by the party seeking the testimony or by the party's attorney setting forth a summary of the testimony sought must be furnished to the Department attorney handling the case or matter.

§ 16.24 Procedure in the event of a demand where disclosure is not otherwise authorized.

(a) Whenever a matter is referred under § 16.22 of this part to a U.S. Attorney or, under § 16.23 of this part, to an Assistant Attorney General, the Director of the EOUST, or their designees (hereinafter collectively referred to as the ''responsible official''), the responsible official shall immediately advise the official in charge of the bureau, division, office, or agency of the Department that was responsible for the collection, assembly, or other preparation of the material demanded or that, at the time the person whose testimony was demanded acquired the information in question, employed such person (hereinafter collectively referred to as the ''originating component''), or that official's designee. In any instance in which the responsible official is also the official in charge of the originating component, the responsible official may perform all functions and make all determinations that this regulation vests in the originating component.

(b) The responsible official, subject to the terms of paragraph (c) of this section, may authorize the appearance and testimony of a present or former Department employee, or the production of material from Department files if:

(1) There is no objection after inquiry of the originating component;

(2) The demanded disclosure, in the judgment of the responsible official, is appropriate under the factors specified in § 16.26(a) of this part; and

(3) None of the factors specified in § 16.26(b) of this part exists with respect to the demanded disclosure.

(c) It is Department policy that the responsible official shall, following any necessary consultation with the originating component, authorize testimony by a present or former employee of the Department or the production of material from Department files without further authorization from Department officials whenever possible: *Provided,* That, when information is collected, assembled, or prepared in connection with litigation or an investigation supervised by a division of the Department or by the EOUST, the Assistant Attorney General in charge of such a division or the Director of the EOUST may require that the originating component obtain the division's or the EOUST's approval before authorizing a responsible official to disclose such information. Prior to authorizing such testimony or production, however, the responsible official shall, through negotiation and, if necessary, appropriate motions, seek to limit the demand to information, the disclosure of which would not be inconsistent with the considerations specified in § 16.26 of this part.

(d)(1) In a case in which the United States is not a party, if the responsible U.S. attorney and the originating component disagree with respect to the appropriateness of demanded testimony or of a particular disclosure, or if they

agree that such testimony or such a disclosure should not be made, they shall determine if the demand involves information that was collected, assembled, or prepared in connection with litigation or an investigation supervised by a division of this Department or the EOUST. If so, the U.S. attorney shall notify the Director of the EOUST or the Assistant Attorney General in charge of the division responsible for such litigation or investigation, who may:

(i) Authorize personally or through a Deputy Assistant Attorney General, the demanded testimony or other disclosure of the information if such testimony or other disclosure, in the Assistant or Deputy Assistant Attorney General's judgment or in the judgment of the Director of the EOUST, is consistent with the factors specified in § 16.26(a) of this part, and none of the factors specified in § 16.26(b) of this part exists with respect to the demanded disclosure;

(ii) Authorize, personally or by a designee, the responsible official, through negotiations and, if necessary, appropriate motions, to seek to limit the demand to matters, the disclosure of which, through testimony or documents, considerations specified in § 16.26 of this part, and otherwise to take all appropriate steps to limit the scope or obtain the withdrawal of a demand; or

(iii) If, after all appropriate steps have been taken to limit the scope or obtain the withdrawal of a demand, the Director of the EOUST or the Assistant or Deputy Assistant Attorney General does not authorize the demanded testimony or other disclosure, refer the matter, personally or through a Deputy Assistant Attorney General, for final resolution to the Deputy or Associate Attorney General, as indicated in § 16.25 of this part.

(2) If the demand for testimony or other disclosure in such a case does not involve information that was collected, assembled, or prepared in connection with litigation or an investigation supervised by a division of this Department, the originating component shall decide whether disclosure is appropriate, except that, when especially significant issues are raised, the responsible official may refer the matter to the Deputy or Associate Attorney General, as indicated in § 16.25 of this part. If the originating component determines that disclosure would not be appropriate and the responsible official does not refer the matter for higher level review, the responsible official shall take all appropriate steps to limit the scope or obtain the withdrawal of a demand.

(e) In a case in which the United States is a party, the Assistant General or the Director of the EOUST responsible for the case or matter, or such persons' designees, are authorized, after consultation with the originating component, to exercise the authorities specified in paragraph (d)(1) (i) through (iii) of this section: *Provided*, That if a demand involves information that was collected, assembled, or prepared originally in connection with litigation or an investigation supervised by another unit of the Department, the responsible official shall notify the other division or the EOUST concerning the demand and the anticipated response. If two litigating units of the Department are unable to resolve a disagreement concerning disclosure, the Assistant Attorneys General in charge of the two divisions in disagreement, or the Director of the EOUST and the appropriate Assistant Attorney General, may refer the matter to the Deputy or Associate Attorney General, as indicated in § 16.25(b) of this part.

(f) In any case or matter in which the responsible official and the originating component agree that it would not be appropriate to authorize testimony or otherwise to disclose the information demanded, even if a court were so to require, no Department attorney responding to the demand should make any representation that implies that the Department would, in fact, comply with the demand if directed to do so by a court. After taking all appropriate steps in such cases to limit the scope or obtain the withdrawal of a demand, the responsible official shall refer the matter to the Deputy or Associate Attorney General, as indicated in § 16.25 of this part.

(g) In any case or matter in which the Attorney General is personally involved in the claim of privilege, the responsible official may consult with the Attorney General and proceed in accord with the Attorney General's instructions without subsequent review by the Deputy or Associate Attorney General.

§ 16.25 Final action by the Deputy or Associate Attorney General.

(a) Unless otherwise indicated, all matters to be referred under § 16.24 by an Assistant Attorney General, the Director of the EOUST, or such person's designees to the Deputy or Associate Attorney General shall be referred (1) to the Deputy Attorney General, if the matter is referred personally by or through the designee of an Assistant Attorney General who is within the general supervision of the Deputy Attorney General, or (2) to the Associate Attorney General, in all other cases.

(b) All other matters to be referred under § 16.24 to the Deputy or Associate Attorney General shall be referred (1) to the Deputy Attorney General, if the originating component is within the supervision of the Deputy Attorney General or is an independent agency that, for administrative purposes, is within the Department of Justice, or (2) to the Associate Attorney General, if the originating component is within the supervision of the Associate Attorney General.

(c) Upon referral, the Deputy or Associate Attorney General shall make the final decision and give notice thereof to the responsible official and such other persons as circumstances may warrant.

§ 16.26 Considerations in determining whether production or disclosure should be made pursuant to a demand.

(a) In deciding whether to make disclosures pursuant to a demand, Department officials and attorneys should consider:

(1) Whether such disclosure is appropriate under the rules of procedure governing the case or matter in which the demand arose, and

(2) Whether disclosure is appropriate under the relevant substantive law concerning privilege.

(b) Among the demands in response to which disclosure will not be made by any Department official are those demands with respect to which any of the following factors exist:

(1) Disclosure would violate a statute, such as the income tax laws, 26 U.S.C. 6103 and 7213, or a rule of procedure, such as the grand jury secrecy rule, F.R.Cr.P., Rule 6(e),

(2) Disclosure would violate a specific regulation;

(3) Disclosure would reveal classified information, unless appropriately declassified by the originating agency,

(4) Disclosure would reveal a confidential source or informant, unless the investigative agency and the source or informant have no objection,

(5) Disclosure would reveal investigatory records compiled for law enforcement purposes, and would interfere with enforcement proceedings or disclose investigative techniques and procedures the effectiveness of which would thereby be impaired,

(6) Disclosure would improperly reveal trade secrets without the owner's consent.

(c) In all cases not involving considerations specified in paragraphs (b)(1) through (b)(6) of this section, the Deputy or Associate Attorney General will authorize disclosure unless, in that person's judgment, after considering paragraph (a) of this section, disclosure is unwarranted. The Deputy or Associate Attorney General will not approve disclosure if the circumstances specified in paragraphs (b)(1) through (b)(3) of this section exist. The Deputy or Associate Attorney General will not approve disclosure if any of the conditions in paragraphs (b)(4) through (b)(6) of this section exist, unless the Deputy or Associate Attorney General determines that the administration of justice requires disclosure. In this regard, if disclosure is necessary to pursue a civil or criminal prosecution or affirmative relief, such as an injunction, consideration shall be given to:

(1) The seriousness of the violation or crime involved,

(2) The past history or criminal record of the violator or accused,

(3) The importance of the relief sought,

(4) The importance of the legal issues presented,

(5) Other matters brought to the attention of the Deputy or Associate Attorney General.

(d) Assistant Attorneys General, U.S. Attorneys, the Director of the EOUST, U.S. Trustees, and their designees, are authorized to issue instructions to attorneys and to adopt supervisory practices, consistent with this subpart, in order to help foster consistent application of the foregoing standards and the requirements of this subpart.

§ 16.27 Procedure in the event a department decision concerning a demand is not made prior to the time a response to the demand is required.

If response to a demand is required before the instructions from the appropriate Department official are received, the responsible official or other Department attorney designated for the purpose shall appear and furnish the court or other authority with a copy of the regulations contained in this subpart and inform the court or other authority that the demand has been or is being, as the case may be, referred for the prompt consideration of the appropriate Department official and shall respectfully request the court or authority to stay the demand pending receipt of the requested instructions.

§ 16.28 Procedure in the event of an adverse ruling.

If the court or other authority declines to stay the effect of the demand in response to a request made in accordance with § 16.27 of this chapter pending receipt of instructions, or if the court or other authority rules that the demand must be complied with irrespective of instructions rendered in accordance with §§ 16.24 and 16.25 of this part not to produce the material or disclose the information sought, the employee or former employee upon whom the demand has been made shall, if so directed by the responsible Department official, respectfully decline to comply with the demand. *See* United States ex rel. Touhy v. Ragen, 340 U.S. 462 (1951).

§ 16.29 Delegation by Assistant Attorneys General.

With respect to any function that this subpart permits the designee of an Assistant Attorney General to perform, the Assistant Attorneys General are authorized to delegate their authority, in any case or matter or any category of cases or matters, to subordinate division officials or U.S. attorneys, as appropriate.

APPENDIX TO SUBPART B OF PART 16—REDELEGATION OF AUTHORITY TO THE DEPUTY ASSISTANT ATTORNEY GENERAL FOR LITIGATION, ANTITRUST DIVISION, TO AUTHORIZE PRODUCTION OR DISCLOSURE OF MATERIAL OR INFORMATION

1. By virtue of the authority vested in me by 28 CFR 16.23(b)(1) the authority delegated to me by that section to authorize the production of material and disclosure of information described in 28 CFR 16.21(a) is hereby redelegated to the Deputy Assistant Attorney General for Litigation, Antitrust Division.

2. This directive shall become effective on the date of its publication in the FEDERAL REGISTER.

[Order No. 960–81, 46 FR 52356, Oct. 27, 1981]

Subpart C—Production of FBI Identification Records in Response to Written Requests by Subjects Thereof

SOURCE: Order No. 556–73, 38 FR 32806, Nov. 28, 1973, unless otherwise noted.

§ 16.30 Purpose and scope.

This subpart contains the regulations of the Federal Bureau of Investigation (FBI) concerning procedures to be followed when the subject of an identification record requests production of that record to review it or to obtain a change, correction, or updating of that record.

[Order No. 2258–99, 64 FR 52226, Sept. 28, 1999]

§ 16.31 Definition of identification record.

An FBI identification record, often referred to as a ''rap sheet,'' is a listing of certain information taken from fingerprint submissions retained by the FBI in connection with arrests and, in

some instances, includes information taken from fingerprints submitted in connection with federal employment, naturalization, or military service. The identification record includes the name of the agency or institution that submitted the fingerprints to the FBI. If the fingerprints concern a criminal offense, the identification record includes the date of arrest or the date the individual was received by the agency submitting the fingerprints, the arrest charge, and the disposition of the arrest if known to the FBI. All arrest data included in an identification record are obtained from fingerprint submissions, disposition reports, and other reports submitted by agencies having criminal justice responsibilities. Therefore, the FBI Criminal Justice Information Services Division is not the source of the arrest data reflected on an identification record.

[Order No. 2258–99, 64 FR 52226, Sept. 28, 1999]

§ 16.32 Procedure to obtain an identification record.

The subject of an identification record may obtain a copy thereof by submitting a written request via the U.S. mails directly to the FBI, Criminal Justice Information Services (CJIS) Division, ATTN: SCU, Mod. D–2, 1000 Custer Hollow Road, Clarksburg, WV 26306. Such request must be accompanied by satisfactory proof of identity, which shall consist of name, date and place of birth and a set of rolled-inked fingerprint impressions placed upon fingerprint cards or forms commonly utilized for applicant or law enforcement purposes by law enforcement agencies.

[Order No. 1134–86, 51 FR 16677, May 6, 1986, as amended by Order No. 2258–99, 64 FR 52226, Sept. 28, 1999]

§ 16.33 Fee for production of identification record.

Each written request for production of an identification record must be accompanied by a fee of $18 in the form of a certified check or money order, payable to the Treasury of the United States. This fee is established pursuant to the provisions of 31 U.S.C. 9701 and is based upon the clerical time beyond the first quarter hour to be spent in searching for, identifying, and reproducing each identification record requested as specified in § 16.10. Any request for waiver of the fee shall accompany the original request for the identification record and shall include a claim and proof of indigency. Subject to applicable laws, regulations, and directions of the Attorney General of the United States, the Director of the FBI may from time to time determine and establish a revised fee amount to be assessed under this authority. Notice relating to revised fee amounts shall be published in the FEDERAL REGISTER.

[Order No. 1943–94, 60 FR 38, Jan. 3, 1995, as amended by Order No. 2258–99, 64 FR 52226, Sept. 28, 1999]

§ 16.34 Procedure to obtain change, correction or updating of identification records.

If, after reviewing his/her identification record, the subject thereof believes that it is incorrect or incomplete in any respect and wishes changes, corrections or updating of the alleged deficiency, he/she should make application directly to the agency which contributed the questioned information. The subject of a record may also direct his/her challenge as to the accuracy or completeness of any entry on his/her record to the FBI, Criminal Justice Information Services (CJIS) Division, ATTN: SCU, Mod. D–2, 1000 Custer Hollow Road, Clarksburg, WV 26306. The FBI will then forward the challenge to the agency which submitted the data requesting that agency to verify or correct the challenged entry. Upon the receipt of an official communication directly from the agency which contributed the original information, the FBI CJIS Division will make any changes necessary in accordance with the information supplied by that agency.

[Order No. 1134–86, 51 FR 16677, May 6, 1986, as amended by Order No. 2258–99, 64 FR 52226, Sept. 28, 1999]

Subpart D—Protection of Privacy and Access to Individual Records Under the Privacy Act of 1974

SOURCE: Order No. 2156–98, 63 FR 29600, June 1, 1998, unless otherwise noted.

§ 16.40 General provisions.

(a) *Purpose and scope.* This subpart contains the rules that the Department of Justice follows under the Privacy Act of 1974, 5 U.S.C. 552a. These rules should be read together with the Privacy Act, which provides additional information about records maintained on individuals. The rules in this subpart apply to all records in systems of records maintained by the Department that are retrieved by an individual's name or personal identifier. They describe the procedures by which individuals may request access to records about themselves, request amendment or correction of those records, and request an accounting of disclosures of those by the Department. In addition, the Department processes all Privacy Act requests for access to records under the Freedom of Information Act (FOIA), 5 U.S.C. 552, following the rules contained in subpart A of this part, which gives requests the benefit of both statutes.

(b) *Definitions.* As used in this subpart:

(1) *Component* means each separate bureau, office, board, division, commission, service, or administration of the Department of Justice.

(2) *Request for access* to a record means a request made under Privacy Act subsection (d)(1).

(3) *Request for amendment or correction* of a record means a request made under Privacy Act subsection (d)(2).

(4) *Request for an accounting* means a request made under Privacy Act subsection (c)(3).

(5) *Requester* means an individual who makes a request for access, a request for amendment or correction, or a request for an accounting under the Privacy Act.

(c) *Authority to request records for a law enforcement purpose.* The head of a component or a United States Attorney, or either's designee, is authorized to make written requests under subsection (b)(7) of the Privacy Act for records maintained by other agencies that are necessary to carry out an authorized law enforcement activity.

[Order No. 2156–98, 63 FR 29600, June 1, 1998; 63 FR 51401, Sept. 25, 1998]

§ 16.41 Requests for access to records.

(a) *How made and addressed.* You may make a request for access to a Department of Justice record about yourself by appearing in person or by writing directly to the Department component that maintains the record. Your request should be sent or delivered to the component's Privacy Act office at the address listed in appendix I to this part. In most cases, a component's central Privacy Act office is the place to send a Privacy Act request. For records held by a field office of the Federal Bureau of Investigation (FBI) or the Immigration and Naturalization Service (INS), however, you must write directly to that FBI or INS field office address, which can be found in most telephone books or by calling the component's central Privacy Act office. (The functions of each component are summarized in Part 0 of this title and in the description of the Department and its components in the ''United States Government Manual,'' which is issued annually and is available in most libraries, as well as for sale from the Government Printing Office's Superintendent of Documents. This manual also can be accessed electronically at the Government Printing Office's World Wide Web site (which can be found at *http://www.access.gpo.gov/su_docs*). If you cannot determine where within the Department to send your request, you may send it to the FOIA/PA Mail Referral Unit, Justice Management Division, U.S. Department of Justice, 950 Pennsylvania Avenue, NW., Washington, DC 20530–0001, and that office will forward it to the component(s) it believes most likely to have the records that you seek. For the quickest possible handling, you should mark both your request letter and the envelope ''Privacy Act Request.''

(b) *Description of records sought.* You must describe the records that you want in enough detail to enable Department personnel to locate the system of records containing them with a reasonable amount of effort. Whenever possible, your request should describe the records sought, the time periods in which you believe they were compiled, and the name or identifying number of each system of records in which you believe they are kept. The Department

publishes notices in the FEDERAL REGISTER that describe its components' systems of records. A description of the Department's systems of records also may be found as part of the ''Privacy Act Compilation'' published by the National Archives and Records Administration's Office of the Federal Register. This compilation is available in most large reference and university libraries. This compilation also can be accessed electronically at the Government Printing Office's World Wide Web site (which can be found at *http://www.access.gpo.gov/su_docs*).

(c) *Agreement to pay fees.* If you make a Privacy Act request for access to records, it shall be considered an agreement by you to pay all applicable fees charged under §16.49, up to $25.00. The component responsible for responding to your request ordinarily shall confirm this agreement in an acknowledgement letter. When making a request, you may specify a willingness to pay a greater or lesser amount.

(d) *Verification of identity.* When you make a request for access to records about yourself, you must verify your identity. You must state your full name, current address, and date and place of birth. You must sign your request and your signature must either be notarized or submitted by you under 28 U.S.C. 1746, a law that permits statements to be made under penalty of perjury as a substitute for notarization. While no specific form is required, you may obtain forms for this purpose from the FOIA/PA Mail Referral Unit, Justice Management Division, U.S. Department of Justice, 950 Pennsylvania Avenue, NW., Washington, DC 20530–0001. In order to help the identification and location of requested records, you may also, at your option, include your social security number.

(e) *Verification of guardianship.* When making a request as the parent or guardian of a minor or as the guardian of someone determined by a court to be incompetent, for access to records about that individual, you must establish:

(1) The identity of the individual who is the subject of the record, by stating the name, current address, date and place of birth, and, at your option, the social security number of the individual;

(2) Your own identity, as required in paragraph (d) of this section;

(3) That you are the parent or guardian of that individual, which you may prove by providing a copy of the individual's birth certificate showing your parentage or by providing a court order establishing your guardianship; and

(4) That you are acting on behalf of that individual in making the request.

[Order No. 2156–98, 63 FR 29600, June 1, 1998; 63 FR 34965, June 26, 1998; 63 FR 51401, Sept. 25, 1998]

§ 16.42 Responsibility for responding to requests for access to records.

(a) *In general.* Except as stated in paragraphs (c), (d), and (e) of this section, the component that first receives a request for access to a record, and has possession of that record, is the component responsible for responding to the request. In determining which records are responsive to a request, a component ordinarily shall include only those records in its possession as of the date the component begins its search for them. If any other date is used, the component shall inform the requester of that date.

(b) *Authority to grant or deny requests.* The head of a component, or the component head's designee, is authorized to grant or deny any request for access to a record of that component.

(c) *Consultations and referrals.* When a component receives a request for access to a record in its possession, it shall determine whether another component, or another agency of the Federal Government, is better able to determine whether the record is exempt from access under the Privacy Act. If the receiving component determines that it is best able to process the record in response to the request, then it shall do so. If the receiving component determines that it is not best able to process the record, then it shall either:

(1) Respond to the request regarding that record, after consulting with the component or agency best able to determine whether the record is exempt from access and with any other component or agency that has a substantial interest in it; or

(2) Refer the responsibility for responding to the request regarding that record to the component best able to determine whether it is exempt from access, or to another agency that originated the record (but only if that agency is subject to the Privacy Act). Ordinarily, the component or agency that originated a record will be presumed to be best able to determine whether it is exempt from access.

(d) *Law enforcement information*. Whenever a request is made for access to a record containing information that relates to an investigation of a possible violation of law and that was originated by another component or agency, the receiving component shall either refer the responsibility for responding to the request regarding that information to that other component or agency or shall consult with that other component or agency.

(e) *Classified information*. Whenever a request is made for access to a record containing information that has been classified by or may be appropriate for classification by another component or agency under Executive Order 12958 or any other executive order concerning the classification of records, the receiving component shall refer the responsibility for responding to the request regarding that information to the component or agency that classified the information, should consider the information for classification, or has the primary interest in it, as appropriate. Whenever a record contains information that has been derivatively classified by a component because it contains information classified by another component or agency, the component shall refer the responsibility for responding to the request regarding that information to the component or agency that classified the underlying information.

(f) *Notice of referral*. Whenever a component refers all or any part of the responsibility for responding to a request to another component or agency, it ordinarily shall notify the requester of the referral and inform the requester of the name of each component or agency to which the request has been referred and of the part of the request that has been referred.

(g) *Timing of responses to consultations and referrals*. All consultations and referrals shall be handled according to the date the Privacy Act access request was initially received by the first component or agency, not any later date.

(h) *Agreements regarding consultations and referrals*. Components may make agreements with other components or agencies to eliminate the need for consultations or referrals for particular types of records.

[Order No. 2156–98, 63 FR 29600, June 1, 1998; 63 FR 34965, June 26, 1998; 63 FR 51401, Sept. 25, 1998]

§ 16.43 Responses to requests for access to records.

(a) *Acknowledgements of requests*. On receipt of a request, a component ordinarily shall send an acknowledgement letter to the requester which shall confirm the requester's agreement to pay fees under § 16.41(c) and provide an assigned request number for further reference.

(b) *Grants of requests for access*. Once a component makes a determination to grant a request for access in whole or in part, it shall notify the requester in writing. The component shall inform the requester in the notice of any fee charged under § 16.49 and shall disclose records to the requester promptly on payment of any applicable fee. If a request is made in person, the component may disclose records to the requester directly, in a manner not unreasonably disruptive of its operations, on payment of any applicable fee and with a written record made of the grant of the request. If a requester is accompanied by another person, the requester shall be required to authorize in writing any discussion of the records in the presence of the other person.

(c) *Adverse determinations of requests for access*. A component making an adverse determination denying a request for access in any respect shall notify the requester of that determination in writing. Adverse determinations, or denials of requests, consist of: A determination to withhold any requested record in whole or in part; a determination that a requested record does not exist or cannot be located; a determination that what has been requested is not a record subject to the Privacy

Act; a determination on any disputed fee matter; and a denial of a request for expedited treatment. The notification letter shall be signed by the head of the component, or the component head's designee, and shall include:

(1) The name and title or position of the person responsible for the denial;

(2) A brief statement of the reason(s) for the denial, including any Privacy Act exemption(s) applied by the component in denying the request; and

(3) A statement that the denial may be appealed under § 16.45(a) and a description of the requirements of § 16.45(a).

§ 16.44 Classified information.

In processing a request for access to a record containing information that is classified under Executive Order 12958 or any other executive order, the originating component shall review the information to determine whether it should remain classified. Information determined to no longer require classification shall not be withheld from a requester on the basis of Exemption (k)(1) of the Privacy Act. On receipt of any appeal involving classified information, the Office of Information and Privacy shall take appropriate action to ensure compliance with part 17 of this title.

§ 16.45 Appeals from denials of requests for access to records.

(a) *Appeals.* If you are dissatisfied with a component's response to your request for access to records, you may appeal an adverse determination denying your request in any respect to the Office of Information and Privacy, U.S. Department of Justice, Flag Building, Suite 570, Washington, DC 20530–0001. You must make your appeal in writing and it must be received by the Office of Information and Privacy within 60 days of the date of the letter denying your request. Your appeal letter may include as much or as little related information as you wish, as long as it clearly identifies the component determination (including the assigned request number, if known) that you are appealing. For the quickest possible handling, you should mark both your appeal letter and the envelope ''Privacy Act Appeal.'' Unless the Attorney General directs otherwise, a Director of the Office of Information and Privacy will act on behalf of the Attorney General on all appeals under this section, except that:

(1) In the case of an adverse determination by the Deputy Attorney General or the Associate Attorney General, the Attorney General or the Attorney General's designee will act on the appeal;

(2) An adverse determination by the Attorney General will be the final action of the Department; and

(3) An appeal ordinarily will not be acted on if the request becomes a matter of litigation.

(b) *Responses to appeals.* The decision on your appeal will be made in writing. A decision affirming an adverse determination in whole or in part will include a brief statement of the reason(s) for the affirmance, including any Privacy Act exemption applied, and will inform you of the Privacy Act provisions for court review of the decision. If the adverse determination is reversed or modified on appeal in whole or in part, you will be notified in a written decision and your request will be reprocessed in accordance with that appeal decision.

(c) *When appeal is required.* If you wish to seek review by a court of any adverse determination or denial of a request, you must first appeal it under this section.

§ 16.46 Requests for amendment or correction of records.

(a) *How made and addressed.* Unless the record is not subject to amendment or correction as stated in paragraph (f) of this section, you may make a request for amendment or correction of a Department of Justice record about yourself by writing directly to the Department component that maintains the record, following the procedures in § 16.41. Your request should identify each particular record in question, state the amendment or correction that you want, and state why you believe that the record is not accurate, relevant, timely, or complete. You may submit any documentation that you think would be helpful. If you believe that the same record is in more than one system of records, you should state that and address your request to each

component that maintains a system of records containing the record.

(b) *Component responses.* Within ten working days of receiving your request for amendment or correction of records, a component shall send you a written acknowledgment of its receipt of your request, and it shall promptly notify you whether your request is granted or denied. If the component grants your request in whole or in part, it shall describe the amendment or correction made and shall advise you of your right to obtain a copy of the corrected or amended record, in disclosable form. If the component denies your request in whole or in part, it shall send you a letter signed by the head of the component, or the component head's designee, that shall state:

(1) The reason(s) for the denial; and

(2) The procedure for appeal of the denial under paragraph (c) of this section, including the name and business address of the official who will act on your appeal.

(c) *Appeals.* You may appeal a denial of a request for amendment or correction to the Office of Information and Privacy in the same manner as a denial of a request for access to records (see § 16.45) and the same procedures shall be followed. If your appeal is denied, you shall be advised of your right to file a Statement of Disagreement as described in paragraph (d) of this section and of your right under the Privacy Act for court review of the decision.

(d) *Statements of Disagreement.* If your appeal under this section is denied in whole or in part, you have the right to file a Statement of Disagreement that states your reason(s) for disagreeing with the Department's denial of your request for amendment or correction. Statements of Disagreement must be concise, must clearly identify each part of any record that is disputed, and should be no longer than one typed page for each fact disputed. Your Statement of Disagreement must be sent to the component involved, which shall place it in the system of records in which the disputed record is maintained and shall mark the disputed record to indicate that a Statement of Disagreement has been filed and where in the system of records it may be found.

(e) *Notification of amendment/correction or disagreement.* Within 30 working days of the amendment or correction of a record, the component that maintains the record shall notify all persons, organizations, or agencies to which it previously disclosed the record, if an accounting of that disclosure was made, that the record has been amended or corrected. If an individual has filed a Statement of Disagreement, the component shall append a copy of it to the disputed record whenever the record is disclosed and may also append a concise statement of its reason(s) for denying the request to amend or correct the record.

(f) *Records not subject to amendment or correction.* The following records are not subject to amendment or correction:

(1) Transcripts of testimony given under oath or written statements made under oath;

(2) Transcripts of grand jury proceedings, judicial proceedings, or quasi-judicial proceedings, which are the official record of those proceedings;

(3) Presentence records that originated with the courts; and

(4) Records in systems of records that have been exempted from amendment and correction under Privacy Act, 5 U.S.C. 552a(j) or (k) by notice published in the FEDERAL REGISTER.

§ 16.47 Requests for an accounting of record disclosures.

(a) *How made and addressed.* Except where accountings of disclosures are not required to be kept (as stated in paragraph (b) of this section), you may make a request for an accounting of any disclosure that has been made by the Department to another person, organization, or agency of any record about you. This accounting contains the date, nature, and purpose of each disclosure, as well as the name and address of the person, organization, or agency to which the disclosure was made. Your request for an accounting should identify each particular record in question and should be made by writing directly to the Department component that maintains the record, following the procedures in § 16.41.

(b) *Where accountings are not required.* Components are not required to provide accountings to you where they relate to:

(1) Disclosures for which accountings are not required to be kept—in other words, disclosures that are made to employees within the agency and disclosures that are made under the FOIA;

(2) Disclosures made to law enforcement agencies for authorized law enforcement activities in response to written requests from those law enforcement agencies specifying the law enforcement activities for which the disclosures are sought; or

(3) Disclosures made from law enforcement systems of records that have been exempted from accounting requirements.

(c) *Appeals.* You may appeal a denial of a request for an accounting to the Office of Information and Privacy in the same manner as a denial of a request for access to records (see § 16.45) and the same procedures will be followed.

§ 16.48 Preservation of records.

Each component will preserve all correspondence pertaining to the requests that it receives under this subpart, as well as copies of all requested records, until disposition or destruction is authorized by title 44 of the United States Code or the National Archives and Records Administration's General Records Schedule 14. Records will not be disposed of while they are the subject of a pending request, appeal, or lawsuit under the Act.

§ 16.49 Fees.

Components shall charge fees for duplication of records under the Privacy Act in the same way in which they charge duplication fees under § 16.11. No search or review fee may be charged for any record unless the record has been exempted from access under Exemptions (j)(2) or (k)(2) of the Privacy Act.

§ 16.50 Notice of court-ordered and emergency disclosures.

(a) *Court-ordered disclosures.* When a record pertaining to an individual is required to be disclosed by a court order, the component shall make reasonable efforts to provide notice of this to the individual. Notice shall be given within a reasonable time after the component's receipt of the order—except that in a case in which the order is not a matter of public record, the notice shall be given only after the order becomes public. This notice shall be mailed to the individual's last known address and shall contain a copy of the order and a description of the information disclosed. Notice shall not be given if disclosure is made from a criminal law enforcement system of records that has been exempted from the notice requirement.

(b) *Emergency disclosures.* Upon disclosing a record pertaining to an individual made under compelling circumstances affecting health or safety, the component shall notify that individual of the disclosure. This notice shall be mailed to the individual's last known address and shall state the nature of the information disclosed; the person, organization, or agency to which it was disclosed; the date of disclosure; and the compelling circumstances justifying the disclosure.

[Order No. 2156–98, 63 FR 29600, June 1, 1998; 63 FR 51401, Sept. 25, 1998]

§ 16.51 Security of systems of records.

(a) Each component shall establish administrative and physical controls to prevent unauthorized access to its systems of records, to prevent unauthorized disclosure of records, and to prevent physical damage to or destruction of records. The stringency of these controls shall correspond to the sensitivity of the records that the controls protect. At a minimum, each component's administrative and physical controls shall ensure that:

(1) Records are protected from public view;

(2) The area in which records are kept is supervised during business hours to prevent unauthorized persons from having access to them;

(3) Records are inaccessible to unauthorized persons outside of business hours; and

(4) Records are not disclosed to unauthorized persons or under unauthorized circumstances in either oral or written form.

(b) Each component shall have procedures that restrict access to records to

only those individuals within the Department who must have access to those records in order to perform their duties and that prevent inadvertent disclosure of records.

[Order No. 2156–98, 63 FR 29600, June 1, 1998; 63 FR 34965, June 26, 1998]

§ 16.52 Contracts for the operation of record systems.

Any approved contract for the operation of a record system will contain the standard contract requirements issued by the General Services Administration to ensure compliance with the requirements of the Privacy Act for that record system. The contracting component will be responsible for ensuring that the contractor complies with these contract requirements.

§ 16.53 Use and collection of social security numbers.

Each component shall ensure that employees authorized to collect information are aware:

(a) That individuals may not be denied any right, benefit, or privilege as a result of refusing to provide their social security numbers, unless the collection is authorized either by a statute or by a regulation issued prior to 1975; and

(b) That individuals requested to provide their social security numbers must be informed of:

(1) Whether providing social security numbers is mandatory or voluntary;

(2) Any statutory or regulatory authority that authorizes the collection of social security numbers; and

(3) The uses that will be made of the numbers.

§ 16.54 Employee standards of conduct.

Each component will inform its employees of the provisions of the Privacy Act, including the Act's civil liability and criminal penalty provisions. Unless otherwise permitted by law, an employee of the Department of Justice shall:

(a) Collect from individuals only the information that is relevant and necessary to discharge the responsibilities of the Department;

(b) Collect information about an individual directly from that individual whenever practicable;

(c) Inform each individual from whom information is collected of:

(1) The legal authority to collect the information and whether providing it is mandatory or voluntary;

(2) The principal purpose for which the Department intends to use the information;

(3) The routine uses the Department may make of the information; and

(4) The effects on the individual, if any, of not providing the information;

(d) Ensure that the component maintains no system of records without public notice and that it notifies appropriate Department officials of the existence or development of any system of records that is not the subject of a current or planned public notice;

(e) Maintain all records that are used by the Department in making any determination about an individual with such accuracy, relevance, timeliness, and completeness as is reasonably necessary to ensure fairness to the individual in the determination;

(f) Except as to disclosures made to an agency or made under the FOIA, make reasonable efforts, prior to disseminating any record about an individual, to ensure that the record is accurate, relevant, timely, and complete;

(g) Maintain no record describing how an individual exercises his or her First Amendment rights, unless it is expressly authorized by statute or by the individual about whom the record is maintained, or is pertinent to and within the scope of an authorized law enforcement activity;

(h) When required by the Act, maintain an accounting in the specified form of all disclosures of records by the Department to persons, organizations, or agencies;

(i) Maintain and use records with care to prevent the unauthorized or inadvertent disclosure of a record to anyone; and

(j) Notify the appropriate Department official of any record that contains information that the Privacy Act does not permit the Department to maintain.

[Order No. 2156–98, 63 FR 29600, June 1, 1998; 63 FR 34965, June 26, 1998; 63 FR 51401, Sept. 25, 1998]

§ 16.55 Other rights and services.

Nothing in this subpart shall be construed to entitle any person, as of right, to any service or to the disclosure of any record to which such person is not entitled under the Privacy Act.

Subpart E—Exemption of Records Systems Under the Privacy Act

SOURCE: Order No. 645–76, 41 FR 12640, Mar. 26, 1976, unless otherwise noted.

§ 16.70 Exemption of the Office of the Attorney General System—limited access.

(a) The following system of records is exempt from 5 U.S.C. 552a(c) (3) and (4); (d); (e) (1), (2) and (3), (e)(4) (G) and (H), (e)(5); and (g):

(1) General Files System of the Office of the Attorney General (JUSTICE/OAG–001).

These exemptions apply only to the extent that information in the system is subject to exemption pursuant to 5 U.S.C. 552a (j)(2), (k)(1), (k)(2), and (k)(5).

(b) Exemptions from the particular subsections are justified for the following reasons:

(1) From subsection (c)(3) because making available to a record subject the accounting of disclosures from records concerning him/her would reveal investigative interest on the part of the Department of Justice as well as the recipient agency. This would permit record subjects to impede the investigation, e.g., destroy evidence, intimidate potential witnesses, or flee the area to avoid inquiries or apprehension by law enforcement personnel.

(2) From subsection (c)(4) because this system is exempt from the access provisions of subsection (d) pursuant to subsections (j) and (k) of the Privacy Act.

(3) From subsection (d) because the records contained in this system relate to official Federal investigations. Individual access to these records might compromise ongoing investigations, reveal confidential informants or constitute unwarranted invasions of the personal privacy of third parties who are involved in a certain investigation. Amendment of the records would interfere with ongoing criminal law enforcement proceedings and impose an impossible administrative burden by requiring criminal investigations to be continuously reinvestigated.

(4) From subsections (e) (1) and (5) because in the course of law enforcement investigations, information may occasionally be obtained or introduced the accuracy of which is unclear or which is not strictly relevant or necessary to a specific investigation. In the interests of effective law enforcement, it is appropriate to retain all information that may aid in establishing patterns of criminal activity. Moreover, it would impede the specific investigative process if it were necessary to assure the relevance, accuracy, timeliness and completeness of all information obtained.

(5) From subsection (e)(2) because in a law enforcement investigation the requirement that information be collected to the greatest extent possible from the subject individual would present a serious impediment to law enforcement in that the subject of the investigation would be informed of the existence of the investigation and would therefore be able to avoid detection, apprehension, or legal obligations of duties.

(6) From subsection (e)(3) because to comply with the requirements of this subsection during the course of an investigation could impede the information gathering process, thus hampering the investigation.

(7) From subsections (e)(4) (G) and (H) because this system is exempt from the access provisions of subsection (d) pursuant to subsections (j) and (k) of the Privacy Act.

(8) From subsection (g) because this system is exempt from the access and amendment provisions of subsection (d) pursuant to subsections (j) and (k) of the Privacy Act.

[Order No. 31–85, 51 FR 751, Jan. 8, 1986]

§ 16.71 Exemption of the Office of the Deputy Attorney General System—limited access.

(a) The following systems of records and exempt from 5 U.S.C. 552a(d)(1) and (e)(1):

(1) Presidential Appointee Candidate Records System (JUSTICE/DAG–006).

(2) Presidential Appointee Records System (JUSTICE/DAG–007).

(3) Special Candidates for Presidential Appointments Records System (JUSTICE/DAG–008).

(4) Miscellaneous Attorney Personnel Records System (JUSTICE/DAG–011).

These exemptions apply only to the extent that information in these systems is subject to exemption pursuant to 5 U.S.C. 552a(k)(5).

(b) Exemptions from the particular subsections are justified for the following reasons:

(1) From subsection (d)(1) because many persons are contacted who, without an assurance of anonymity, refuse to provide information concerning a candidate for a Presidential appointee or Department attorney position. Access could reveal the identity of the source of the information and constitute a breach of the promise of confidentiality on the part of the Department of Justice. Such breaches ultimately would restrict the free flow of information vital to a determination of a candidate's qualifications and suitability.

(2) From subsection (e)(1) because in the collection of information for investigative and evaluative purposes, it is impossible to determine in advance what exact information may be of assistance in determining the qualifications and suitability of a candidate. Information which may appear irrelevant, when combined with other seemingly irrelevant information, can on occasion provide a composite picture of a candidate for a position which assists in determining whether that candidate should be nominated for appointment.

(c) The following systems of records are exempt from 5 U.S.C. 552a(c)(3) and (4); (d); (e)(1), (2), (3) and (5); and (g):

(1) Drug Enforcement Task Force Evaluation and Reporting System (JUSTICE/DAG–003).

(2) General Files System of the Office of the Deputy Attorney General (JUSTICE/DAG–013).

(d) In addition, the Drug Enforcement Task Force Evaluation and Reporting System is exempt from 5 U.S.C. 552a(e)(4)(G) and (H). The exemptions for the Drug Enforcement Task Force Evaluation and Reporting System apply only to the extent that information is subject to exemption pursuant to 5 U.S.C. 552a(j)(2) and (K)(2). The exemptions for the General Files System apply only to the extent that information is subject to exemption pursuant to 5 U.S.C. 552a(j)(2), (k)(1), (k)(2) and (k)(5).

(e) Exemptions from the particular subsections are justified for the following reasons:

(1) From subsection (c)(3) because making available to a record subject the accounting of disclosures from records concerning him/her could reveal investigative interest on the part of the Department of Justice, as well as the recipient agency. This would permit record subjects to impede the investigation, e.g., destroy evidence, intimidate potential witnesses, or flee the area to avoid inquiries or apprehension by law enforcement personnel. Further, making available to a record subject the accounting of disclosures could reveal the identity of a confidential source. In addition, release of an accounting of disclosures from the General Files System may reveal information that is properly classified pursuant to Executive Order 12356, and thereby cause damage to the national security.

(2) From subsection (c)(4) because these systems are exempt from the access provisions of subsection (d) pursuant to subsections (j) and (k) of the Privacy Act.

(3) From subsection (d) because the records contained in these systems relate to official Federal investigations. Individual access to these records could compromise ongoing investigations, reveal confidential informants and/or sensitive investigative techniques used in particular investigations, or constitute unwarranted invasions of the personal privacy of third parties who are involved in a certain investigation. In addition, release of records from the General Files System may reveal information that is properly classified pursuant to Executive Order 12356, and thereby cause damage to the national security. Amendment of the records in either of these systems would interfere with ongoing law enforcement proceedings and impose an impossible administrative burden by requiring law

enforcement investigations to be continuously reinvestigated.

(4) From subsections (e)(1) and (e)(5) because in the course of law enforcement investigations information may occasionally be obtained or introduced the accuracy of which is unclear or which is not strictly relevant or necessary to a specific investigation. In the interests of effective law enforcement, it is appropriate to retain all information that may aid in establishing patterns of criminal activity. Moreover, it would impede any investigative process, whether civil or criminal, if it were necessary to assure the relevance, accuracy, timeliness and completeness of all information obtained.

(5) From subsection (e)(2) because in a law enforcement investigation the requirement that information be collected to the greatest extent possible from the subject individual would present a serious impediment to law enforcement in that the subject of the investigation would be informed of the existence of the investigation and may therefore be able to avoid detection, apprehension, or legal obligations or duties.

(6) From subsection (e)(3) because to comply with the requirements of this subsection during the course of an investigation could impede the information gathering process, thus hampering the investigation.

(7) From subsections (e)(4) (G) and (H) because no access to these records is available under subsection (d) of the Privacy Act. (This exemption applies only to the Drug Enforcement Task Force Evaluation and Reporting System.)

(8) From subsection (g) because these systems of records are exempt from the access and amendment provisions of subsection (d) pursuant to subsections (j) and (k) of the Privacy Act.

[Order No. 57–91, 56 FR 58305, Nov. 19, 1991]

§ 16.72 Exemption of Office of the Associate Attorney General System—limited access.

(a) The following system of records is exempt from 5 U.S.C. 552a(c) (3) and (4); (d); (e)(1), (2), (3) and (5); and (g):

(1) General Files System of the Office of the Associate Attorney General (JUSTICE/AAG–001).

These exemptions apply only to the extent that information in the system is subject to exemption pursuant to 5 U.S.C. 552a(j)(2), (k)(1), (k)(2) and (k)(5).

(b) Exemptions from the particular subsections are justified for the following reasons:

(1) From subsection (c)(3) because making available to a record subject the accounting of disclosures from records concerning him/her could reveal investigative interest on the part of the Department of Justice, as well as the recipient agency. This would permit record subjects to impede the investigation, e.g., destroy evidence, intimidate potential witnesses, or flee the area to avoid inquiries or apprehension by law enforcement personnel. Further, making available to a record subject the accounting of disclosures could reveal the identity of a confidential source. In addition, release of an accounting of disclosures may reveal information that is properly classified pursuant to Executive Order 12356, and thereby cause damage to the national security.

(2) From subsection (c)(4) because this system is exempt from the access provisions of subsection (d) pursuant to subsections (j)(2), (k)(1), (k)(2) and (k)(5) of the Privacy Act.

(3) From subsection (d) because the records contained in this system relate to official Federal investigations. Individual access to these records could compromise ongoing investigations, reveal confidential informants and/or sensitive investigative techniques used in particular investigations, or constitute unwarranted invasions of the personal privacy of third parties who are involved in a certain investigation. In addition, release of these records may reveal information that is properly classified pursuant to Executive Order 12356, and thereby cause damage to the national security. Amendment of the records in this system would interfere with ongoing law enforcement proceedings and impose an impossible administrative burden by requiring law enforcement investigations to be continuously reinvestigated.

(4) From subsections (e)(1) and (e)(5) because in the course of law enforcement investigations information may occasionally be obtained or introduced

the accuracy of which is unclear or which is not strictly relevant or necessary to a specific investigation. In the interests of effective law enforcement, it is appropriate to retain all information that may aid in establishing patterns of criminal activity. Moreover, it would impede any investigative process, whether civil or criminal, if it were necessary to assure the relevance, accuracy, timeliness and completeness of all information obtained.

(5) From subsection (e)(2) because in a law enforcement investigation the requirement that information be collected to the greatest extent possible from the subject individual would present a serious impediment to law enforcement in that the subject of the investigation would be informed of the existence of the investigation and may therefore be able to avoid detection, apprehension, or legal obligations or duties.

(6) From subsection (e)(3) because to comply with the requirements of this subsection during the course of an investigation could impede the information gathering process, thus hampering the investigation.

(7) From subsection (g) because this system of records is exempt from the access and amendment provisions of subsection (d) pursuant to subsections (j)(2), (k)(1), (k)(2) and (k)(5) of the Privacy Act.

[Order No. 57–91, 56 FR 58305, Nov. 19, 1991]

§ 16.73 Exemption of Office of Legal Policy System—limited access.

(a) The following system of records is exempt from 5 U.S.C 552a (d)(1), (2), (3) and (4); (e)(1) and (2), (e)(4)(G) and (H), (e)(5); and (g):

(1) Freedom of Information and Privacy Appeals Index (JUSTICE/OLP–001).

These exemptions apply only to the extent that information in this system is subject to exemption pursuant to 5 U.S.C. 552a(j)(2), (k)(2) and (k)(5).

(b) Exemptions from the particular subsections are justified for the following reasons:

(1) From subsections (d)(1), (2), (3), and (4) to the extent that information in this record system relates to official Federal investigations and matters of law enforcement. Individual access to these records might compromise ongoing investigations, reveal confidential informants or constitute unwarranted invasions of the personal privacy of third parties who are involved in a certain investigation. Amendment of the records would interfere with ongoing criminal law enforcement proceedings and impose an impossible administrative burden by requiring criminal investigations to be continuously reinvestigated.

(2) From subsections (e)(1) and (5) because in the course of law enforcement investigations, information may occasionally be obtained or introduced the accuracy of which is unclear or which is not strictly relevant or necessary to a specific investigation. In the interests of effective law enforcement, it is appropriate to retain all information that may aid in establishing patterns of criminal activity. Moreover, it would impede the specific investigative process if it were necessary to assure the relevance, accuracy, timeliness, and completeness of all information obtained.

(3) From subsection (e)(2) because in a law enforcement investigation the requirement that information be collected to the greatest extent possible from the subject individual would present a serious impediment to law enforcement in that the subject of the investigation would be informed of the existence of the investigation and would therefore be able to avoid detection, apprehension, or legal obligations or duties.

(4) From subsections (e)(4)(G) and (H) because this system is exempt from the access provisions of subsection (d) pursuant to subsections (j) and (k) of the Privacy Act.

(5) From subsection (g) because this system is exempt from the access provisions of subsection (d) pursuant to subsections (j) and (k) of the Privacy Act.

(c) The following system of records is exempt from 5 U.S.C. 552a(d)(1) and (e)(1):

(1) U.S. Judges Records System (JUSTICE/OLP–002).

These exemptions apply to the extent that information in this system is subject to exemption pursuant to 5 U.S.C. 552a(k)(5).

(d) Exemptions from the particular subsections are justified for the following reasons:

(1) From subsection (d)(1) because many persons are contracted who, without an assurance of anonymity, refuse to provide information concerning a candidate for a judgeship. Access could reveal the identity of the source of the information and constitute a breach of the promised confidentiality on the part of the Department. Such breaches ultimately would restrict the free flow of information vital to the determination of a candidate's qualifications and suitability.

(2) From subsection (e)(1) because in the collection of information for investigative and evaluative purposes, it is impossible to determine advance what exact information may be of assistance in determining the qualifications and suitability of a candidate. Information which may seem irrelevant, when combined with other seemingly irrelevant information, can on occasion provide a composite picture of a candidate which assists in determining whether that candidate should be nominated for appointment.

(e) The following system of records is exempt from U.S.C. 552a(c) (3) and (4); (d); (e)(1), (2) and (3), (e)(4)(G) and (H) (e)(5); and (g):

(1) General Files System of the Office of Legal Policy (JUSTICE/OLP–003).

These exemptions apply only to the extent that information in the system is subject to exemption pursuant to 5 U.S.C. 552a(j)(2), (k)(1), (k)(2), and (k)(5).

(f) Exemptions from the particular subsections are justified for the following reasons:

(1) From subsection (c)(3) because making available to a record subject the accounting of disclosures from records concerning him/her would reveal investigative interest on the part of the Department as well as the recipient agency. This would permit record subjects to impede the investigation, e.g., destroy evidence, intimidate potential witnesses, or flee the area to avoid inquiries or apprehension by law enforcement personnel.

(2) From subsection (c)(4) because this system is exempt from the access provisions of subsection (d) pursuant to subsections (j) and (k) of the Privacy Act.

(3) From subsection (d) because the records contained in this system relate to official Federal investigations. Individual access to these records might compromise ongoing investigations, reveal confidential informants, or constitute unwarranted invasions of the personal privacy of third parties who are involved in a certain investigation. Amendment of records would interfere with ongoing criminal law enforcement proceedings and impose an impossible administrative burden by requiring criminal investigations to be continuously reinvestigated.

(4) From subsections (e) (1) and (5) because in the course of law enforcement investigations, information may occasionally be obtained or introduced the accuracy of which is unclear or which is not strictly relevant or necessary to a specific investigation. In the interests of effective law enforcement, it is appropriate to retain all information since it may aid in establishing patterns of criminal activity. Moreover, it would impede the specific investigation process if it were necessary to assure the relevance, accuracy, timeliness and completeness of all information obtained.

(5) From subsections (e)(2) because in a law enforcement investigation the requirement that information be collected to the greatest extent possible from the subject individual would present a serious impediment to law enforcement in that the subject of the investigation would be informed of the existence of the investigation and would therefore be able to avoid detection, apprehension, or legal obligations and duties.

(6) From subsection (e)(3) because to comply with the requirements of this subsection during the course of an investigation could impede the information gathering process, thus hampering the investigation.

(7) From subsections (e)(4) (G) and (H) because this system is exempt from the access provisions of subsection (d)

pursuant to subsections (j) and (k) of the Privacy Act.

(8) From subsection (g) because this system is exempt from the access and amendment provisions of subsection (d) pursuant to subsections (j) and (k) of the Privacy Act.

(g) The following system of records is exempt from 5 U.S.C. 552a (c)(3) and (4); (d); (e)(1), (2) and (3), (e)(4)(G) and (H), (e)(5); and (g):

(1) Declassification Review System (JUSTICE/OLP-004).

These exemptions apply only to the extent that information in this system is subject to exemption pursuant to 5 U.S.C. 552(j)(2), (k)(1), (k)(2), and (k)(5).

(h) Exemptions from the particular subsections are justified for the following reasons:

(1) From subsection (c)(3) because making available to a record subject the accounting of disclosures from records concerning him/her would reveal investigative interest on the part of the Department of Justice as well as the recipient agency. This would permit record subjects to impede the investigation e.g., destroy evidence, intimidate potential witnesses, or flee the area to avoid inquiries or apprehension by law enforcement personnel.

(2) From subsection (c)(4) because this system is exempt from the access provisions of subsection (d) pursuant to subsections (j) and (k) of the Privacy Act.

(3) From subsection (d) to the extent that information in this record system relates to official Federal investigations and matters of law enforcement and/or is properly classified pursuant to E.O. 12356. Individual access to these records might compromise ongoing investigations, reveal confidential sources or constitute unwarranted invasions of the personal privacy of third parties who are involved in a certain investigation, or jeopardize national security or foreign policy interests. Amendment of the records would interfere with ongoing criminal law enforcement proceedings and impose an impossible administrative burden by requiring criminal investigations to be continuously reinvestigated.

(4) From subsections (e) (1) and (5) because in the course of law enforcement investigations, information may occasionally be obtained or introduced the accuracy of which is unclear or which is not strictly relevant or necessary to a specific investigation. In the interests of effective law enforcement, it is appropriate to retain all information which may aid in establishing patterns of criminal activity. Moreover, it would impede the specific investigative process if it were necessary to assure the relevance, accuracy, timeliness, and completeness of all information obtained.

(5) From subsection (e)(2) because in a law enforcement investigation the requirement that information be collected to the greatest extent possible from the subject individual would present a serious impediment to law enforcement in that the subject of the investigation would be informed of the existence of the investigation and would therefore be able to avoid detection, apprehension, or legal obligations or duties.

(6) From subsection (e)(3) because to comply with the requirements of this subsection during the course of an investigation could impede the information gathering process, thus hampering the investigation.

(7) From subsections (e)(4) (G) and (H), and (g) because this system is exempt from the access provisions of subsection (d) pursuant to subsections (j) and (k) of the Privacy Act.

[Order No. 34–85, 51 FR 754, Jan. 8, 1986. Redesignated by Order No. 6–86, 51 FR 15476, Apr. 24, 1986 and further redesignated and amended by Order No. 19–86, 51 FR 39373, Oct. 28, 1986]

§ 16.74 Exemption of Office of Intelligence Policy and Review Systems—limited access.

(a) The following systems of records are exempt from 5 U.S.C. 552a(c)(3), (c)(4), (d), (e)(2), (e)(3), (e)(4)(G), (e)(4)(H), (e)(8), (f) and (g); these systems of records and associated exemptions are adopted by and apply with equal force and effect to the National Security Division, until modified, superseded, or revoked in accordance with law:

(1) Policy and Operational Records System (JUSTICE/OIPR-001);

(2) Foreign Intelligence Surveillance Act Records System (JUSTICE/OIPR-002);

(3) Litigation Records System (JUSTICE/OIPR-003); and

(4) Domestic Security/Terrorism Investigations Records System (JUSTICE/OIPR-004).

These exemptions apply only to the extent that information in those systems is subject to exemption pursuant to 5 U.S.C. 552a(j)(2), (k)(1) and (k)(2).

(b) Exemptions from the particular subsections are justified for the following reasons:

(1) From subsection (c)(3) because release of the disclosure accounting would put the target of a surveillance or investigation on notice of the investigation or surveillance and would thereby seriously hinder authorized United States intelligence activities.

(2) From subsections (c)(4), (d), (e)(4)(G), (e)(4)(H), (f) and (g) because these provisions contemplate individual access to records and such access would compromise ongoing surveillances or investigations and reveal the sources and methods of an investigation.

(3) From subsection (e)(2) because, although this office does not conduct investigations, the collection efforts of agencies that supply information to this office would be thwarted if the agency were required to collect information with the subject's knowledge.

(4) From subsections (e)(3) and (e)(8) because disclosure and notice would provide the subject with substantial information which could impede of compromise an investigation. For example, an investigatory subject could, once made aware that an investigation was ongoing, alter his manner of engaging in intelligence or terrorist activities in order to avoid detection.

[Order No. 19–86, 51 FR 39374, Oct. 28, 1986, as amended by Order No. 015–2006, 71 FR 58278, Oct. 3, 2006]

§ 16.75 Exemption of the Office of the Inspector General Systems/Limited Access.

(a) The following system of records is exempted pursuant to the provisions of 5 U.S.C. 552a(j)(2) from subsections (c)(3) and (4), (d), (e)(1), (2), (3), (5), and (8), and (g) of 5 U.S.C. 552a. In addition, the following system of records is exempted pursuant to the provisions of 5 U.S.C. 552a(k)(1) and (k)(2) from subsections (c)(3), (d), and (e)(1) of 5 U.S.C. 552a:

(1) Office of the Inspector General Investigative Records (JUSTICE/OIG–001).

These exemptions apply only to the extent that information in this system is subject to exemption pursuant to 5 U.S.C. 552a (j)(2), (k)(1) and (k)(2). Where compliance would not appear to interfere with or adversely affect the law enforcement process, and/or where it may be appropriate to permit individuals to contest the accuracy of the information collected, e.g., public source materials, the applicable exemption may be waived, either partially or totally, by the Office of the Inspector General (OIG).

(b) Exemptions from the particular subsections are justified for the following reasons:

(1) From subsection (c)(3) because release of disclosure accounting could alert the subject of an investigation of an actual or potential criminal, civil, or regulatory violation to the existence of the investigation and the fact that they are subjects of the investigation, and reveal investigative interest by not only the OIG, but also by the recipient agency. Since release of such information to the subjects of an investigation would provide them with significant information concerning the nature of the investigation, release could result in the destruction of documentary evidence, improper influencing of witnesses, endangerment of the physical safety of confidential sources, witnesses, and law enforcement personnel, the fabrication of testimony, flight of the subject from the area, and other activities that could impede or compromise the investigation. In addition, accounting for each disclosure could result in the release of properly classified information which would compromise the national defense or disrupt foreign policy.

(2) From subsection (c)(4) because this system is exempt from the access provisions of subsection (d) pursuant to subsections (j) and (k) of the Privacy Act.

(3) From the access and amendment provisions of subsection (d) because access to the records contained in this system of records could inform the subject of an investigation of an actual or potential criminal, civil, or regulatory violation, of the existence of that investigation; of the nature and scope of the information and evidence obtained as to his activities; of the identity of confidential sources, witnesses, and law enforcement personnel, and of information that may enable the subject to avoid detection or apprehension. These factors would present a serious impediment to effective law enforcement where they prevent the successful completion of the investigation, endanger the physical safety of confidential sources, witnesses, and law enforcement personnel, and/or lead to the improper influencing of witnesses, the destruction of evidence, or the fabrication of testimony. In addition, granting access to such information could disclose security-sensitive or confidential business information or information that would constitute an unwarranted invasion of the personal privacy of third parties. Finally, access to the records could result in the release of properly classified information which would compromise the national defense or disrupt foreign policy. Amendment of the records would interfere with ongoing investigations and law enforcement activities and impose an impossible administrative burden by requiring investigations to be continuously reinvestigated.

(4) From subsection (e)(1) because the application of this provision could impair investigations and interfere with the law enforcement responsibilities of the OIG for the following reasons:

(i) It is not possible to detect relevance or necessity of specific information in the early stages of a civil, criminal or other law enforcement investigation, case, or matter, including investigations in which use is made of properly classified information. Relevance and necessity are questions of judgment and timing, and it is only after the information is evaluated that the relevance and necessity of such information can be established.

(ii) During the course of any investigation, the OIG may obtain information concerning actual or potential violations of laws other than those within the scope of its jurisdiction. In the interest of effective law enforcement, the OIG should retain this information, as it may aid in establishing patterns of criminal activity, and can provide valuable leads for Federal and other law enforcement agencies.

(iii) In interviewing individuals or obtaining other forms of evidence during an investigation, information may be supplied to an investigator which relates to matters incidental to the primary purpose of the investigation but which may relate also to matters under the investigative jurisdiction of another agency. Such information cannot readily be segregated.

(5) From subsection (e)(2) because, in some instances, the application of this provision would present a serious impediment to law enforcement for the following reasons:

(i) The subject of an investigation would be placed on notice as to the existence of an investigation and would therefore be able to avoid detection or apprehension, to improperly influence witnesses, to destroy evidence, or to fabricate testimony.

(ii) In certain circumstances the subject of an investigation cannot be required to provide information to investigators, and information relating to a subject's illegal acts, violations of rules of conduct, or any other misconduct must be obtained from other sources.

(iii) In any investigation it is necessary to obtain evidence from a variety of sources other than the subject of the investigation in order to verify the evidence necessary for successful litigation.

(6) From subsection (e)(3) because the application of this provision would provide the subject of an investigation with substantial information which could impede or compromise the investigation. Providing such notice to a subject of an investigation could interfere with an undercover investigation by revealing its existence, and could endanger the physical safety of confidential sources, witnesses, and investigators by revealing their identities.

(7) From subsection (e)(5) because the application of this provision would prevent the collection of any data not shown to be accurate, relevant, timely, and complete at the moment it is collected. In the collection of information for law enforcement purposes, it is impossible to determine in advance what information is accurate, relevant, timely, and complete. Material which may seem unrelated, irrelevant, or incomplete when collected may take on added meaning or significance as an investigation progresses. The restrictions of this provision could interfere with the preparation of a complete investigative report, and thereby impede effective law enforcement.

(8) From subsection (e)(8) because the application of this provision could prematurely reveal an ongoing criminal investigation to the subject of the investigation, and could reveal investigative techniques, procedures, or evidence.

(9) From subsection (g) to the extent that this system is exempt from the access and amendment provisions of subsection (d) pursuant to subsections (j)(2) and (k)(1) and (k)(2) of the Privacy Act.

(c) The following system of records is exempted from 5 U.S.C. 552a(d).

(1) Office of the Inspector General, Freedom of Information/Privacy Acts (FOI/PA) Records (JUSTICE/OIG–003).

This exemption applies only to the extent that information in this system is subject to exemption pursuant to 5 U.S.C. 552a (j)(2), (k)(1), and (k)(2). To the extent that information in a record pertaining to an individual does not relate to official Federal investigations and law enforcement matters, the exemption does not apply. In addition, where compliance would not appear to interfere with or adversely affect the overall law enforcement process, the applicable exemption may be waived by the Office of the Inspector General (OIG).

(d) Exemption from subsection (d) is justified for the following reasons:

(1) From the access and amendment provisions of subsection (d) because access to the records contained in this system of records could inform the subject of an investigation of an actual or potential criminal, civil, or regulatory violation of the existence of that investigation; of the nature and scope of the information and evidence obtained as to his activities; of the identity of confidential sources, witnesses, and law enforcement personnel; and of information that may enable the subject to avoid detection or apprehension. These factors would present a serious impediment to effective law enforcement where they prevent the successful completion of the investigation, endanger the physical safety of confidential sources, witnesses, and law enforcement personnel, and/or lead to the improper influencing of witnesses, the destruction of evidence, or the fabrication of testimony. In addition, granting access to such information could disclose security-sensitive or confidential business information or information that would constitute an unwarranted invasion of the personal privacy of third parties. Finally, access to the records could result in the release of properly classified information which would compromise the national defense or disrupt foreign policy. Amendment of the records would interfere with ongoing investigations and law enforcement activities and impose an impossible administrative burden by requiring investigations to be continuously reinvestigated.

(2) [Reserved]

[Order No. 63–92, 57 FR 8263, Mar. 9, 1992, as amended by Order No. 64–92, 57 FR 8263, Mar. 9, 1992]

§ 16.76 Exemption of Justice Management Division.

(a) The following system of records is exempt from 5 U.S.C. 552a(d):

(1) Controlled Substances Act Nonpublic Records (JUSTICE/JMD–002).

This exemption applies only to the extent that information in this system is subject to exemption pursuant to 5 U.S.C. 552a(j)(2).

(b) Exemption from subsection (d) is justified for the following reasons:

(1) Access to and use of the nonpublic records maintained in this system are restricted by law. Section 3607(b) of Title 18 U.S.C. (enacted as part of the Sentencing Reform Act of 1984, Pub. L. 98–473, Chapter II) provides that the sole purpose of these records shall be for use by the courts in determining

whether a person found guilty of violating section 404 of the Controlled Substances Act qualifies:

(i) For the disposition available under 18 U.S.C. 3607(a) to persons with no prior conviction under a Federal or State law relating to controlled substances, or

(ii) For an order, under 18 U.S.C. 3607(c), expunging all official records (except the nonpublic records to be retained by the Department of Justice) of the arrest and any subsequent criminal proceedings relating to the offense.

(2) Information in this system consists of arrest records, including those of co-defendants. The records include reports of informants and investigations. Therefore, access could disclose investigative techniques, reveal the identity of confidential sources, and invade the privacy of third parties.

(c) The following system of records is exempted from 5 U.S.C. 552a(c)(3) and (4); (d)(1), (2), (3), and (4); (e)(1), (2), (3), (5), and (8); and (g): Federal Bureau of Investigation Whistleblower Case Files (Justice/JMD–023). These exemptions apply only to the extent that information in a record contained within this system is subject to exemptions pursuant to 5 U.S.C. 552a(j)(2) and (k).

(d) Exemption from the particular subsections is justified for the following reasons:

(1) *Subsection (c)(3).* To provide the subject with an accounting of disclosures of records in this system could inform that individual of the existence, nature, or scope of an actual or potential law enforcement or counterintelligence investigation, and thereby seriously impede law enforcement or counterintelligence efforts by permitting the record subject and other persons to whom he might disclose the records to avoid criminal penalties, civil remedies, or counterintelligence measures.

(2) *Subsection (c)(4).* This subsection is inapplicable to the extent that an exemption is being claimed for subsection (d).

(3) *Subsection (d)(1).* Information within this record system could relate to official federal investigations and matters of law enforcement. Individual access to these records could compromise ongoing investigations, reveal confidential informants and/or sensitive investigative techniques used in particular investigations, or constitute unwarranted invasions of the personal privacy of third parties who are involved in a certain investigation. Disclosure may also reveal information relating to actual or potential law enforcement investigations. Disclosure of classified national security information would cause damage to the national security of the United States.

(4) *Subsection (d)(2).* Amendment of these records could interfere with ongoing criminal or civil law enforcement proceedings and impose an impossible administrative burden by requiring investigations to be continuously reinvestigated.

(5) *Subsections (d)(3) and (4).* These subsections are inapplicable to the extent exemption is claimed from (d)(1) and (2).

(6) *Subsection (e)(1).* It is often impossible to determine in advance if investigatory information contained in this system is accurate, relevant, timely and complete, but, in the interests of effective law enforcement and counterintelligence, it is necessary to retain this information to aid in establishing patterns of activity and provide investigative leads.

(7) *Subsection (e)(2).* To collect information from the subject individual could serve to notify the subject individual that he or she is the subject of a criminal investigation and thereby present a serious impediment to such investigations.

(8) *Subsection (e)(3).* To inform individuals as required by this subsection could reveal the existence of a criminal investigation and compromise investigative efforts.

(9) *Subsection (e)(5).* It is often impossible to determine in advance if investigatory information contained in this system is accurate, relevant, timely and complete, but, in the interests of effective law enforcement and counterintelligence, it is necessary to retain this information to aid in establishing patterns of activity and provide investigative leads.

(10) *Subsection (e)(8).* To serve notice could give persons sufficient warning to evade investigative efforts.

(11) *Subsection (g)*. This subsection is inapplicable to the extent that the system is exempt from other specific subsections of the Privacy Act.

[Order No. 645–76, 41 FR 12640, Mar. 26, 1976, as amended by Order No. 688–77, 42 FR 9999, Feb. 18, 1977; Order No. 899–80, 45 FR 43703, June 30, 1980; Order No. 6–86, 51 FR 15476, Apr. 24, 1986; Order No. 246–2001, 66 FR 54663, Oct. 30, 2001; Order No. 297–2002, 67 FR 70163, Nov. 21, 2002; Order No. 019–2005, 71 FR 17, Jan. 3, 2006]

§ 16.77 Exemption of U.S. Trustee Program System—limited access.

(a) The following system of records is exempt from 5 U.S.C. 552a (c) (3) and (4); (d); (e) (1), (2) and (3), (e)(4) (G) and (H), (e) (5) and (8); (f) and (g):

(1) U.S. Trustee Program Case Referral System, JUSTICE/UST–004.

These exemptions apply to the extent that information in this system is subject to exemption pursuant to 5 U.S.C. 552a(j)(2) and (k)(2).

(b) Exemptions from the particular subsections are justified for the following reasons:

(1) From subsection (c)(3) because the release of the disclosure accounting would permit the subject of an investigation to obtain valuable information concerning the nature of that investigation. This would permit record subjects to impede the investigation, e.g., destroy evidence, intimidate potential witnesses, or flee the area to avoid inquiries or apprehension by law enforcement personnel.

(2) From subsection (c)(4) since an exemption being claimed for subsection (d) makes this subsection inapplicable.

(3) From subsection (d) because access to the records contained in this system might compromise ongoing investigations, reveal confidential informants, or constitute unwarranted invasions of the personal privacy of third parties who are involved in a certain investigation. Amendment of the records would interfere with ongoing criminal law enforcement proceedings and impose an impossible administrative burden by requiring criminal investigations to be continuously reinvestigated.

(4) From subsections (e)(1) and (e)(5) because in the course of law enforcement investigations, information may occasionally be obtained or introduced the accuracy of which is unclear or which is not strictly relevant or necessary to a specific investigation. In the interest of effective law enforcement, it is appropriate to retain all information that may aid in establishing patterns of criminal activity. Moreover, it would impede the specific investigative process if it were necessary to assure the relevance, accuracy, timeliness, and completeness of all information obtained.

(5) From subsection (e)(2) because in a criminal investigation the requirement that information be collected to the greatest extent possible from the subject individual would present a serious impediment to law enforcement because the subject of the investigation would be placed on notice as to the existence of the investigation and would therefore be able to avoid detection or apprehension, to influence witnesses improperly, to destroy evidence, or to fabricate testimony.

(6) From subsection (e)(3) because the requirement that individuals supplying information be provided with a form stating the requirements of subsection (e)(3) would constitute a serious impediment to law enforcement in that it would compromise the existence of a confidential investigation or reveal the identity of witnesses or confidential informants.

(7) From subsections (e)(4) (G) and (H) because this system of records is exempt from the access provisions of subsection (d) pursuant to subsections (j) and (k).

(8) From subsection (e)(8) because the individual notice requirement of this subsection could present a serious impediment to law enforcement in that this could interfere with the U.S. Attorney's ability to issue subpoenas.

(9) From subsections (f) and (g) because this system has been exempted from the access provisions of subsection (d).

[Order No. 1–87, 52 FR 3631, Feb. 5, 1987]

§ 16.78 Exemption of the Special Counsel for Immigration-Related, Unfair Employment Practices Systems.

(a) The following system of records is exempt from 5 U.S.C. 552a(c)(3) and (d).

(1) Central Index File and Associated Records, JUSTICE/OSC–001.

These exemptions apply to the extent that information in this system is subject to exemption pursuant to 5 U.S.C. 552a(k)(2).

(b) Exemptions from the particular subsections are justified for the following reasons:

(1) From subsection (c)(3) because the release of the disclosure accounting would permit the subject of an investigation to obtain valuable information concerning the nature of that investigation. This would permit record subjects to impede the investigation, e.g., destroy evidence, intimidate potential witnesses, or flee the area to avoid inquiries.

(2) From subsection (d) because access to the records might compromise ongoing investigations, reveal confidential informants, or constitute unwarranted invasions of the personal privacy of third parties who are involved in a certain investigation.

[Order No. 10–88, 53 FR 7735, Mar. 10, 1988]

§ 16.79 Exemption of Pardon Attorney System.

(a) The following system of records is exempt from 5 U.S.C. 552a, subsections (c)(3), (c)(4), (d)(1), (d)(2), (d)(3), (d)(4), and (e)(5): Executive Clemency Case Files/Executive Clemency Tracking System (JUSTICE/OPA–001). These exemptions apply only to the extent that information in this system of records is subject to exemption pursuant to 5 U.S.C. 552a(j)(2).

(b) Exemption from the particular subsections is justified for the following reasons:

(1) From subsection (c)(3) because:

(i) The purpose of the creation and maintenance of the Executive Clemency Case Files/Executive Clemency Tracking System (JUSTICE/OPA–001) is to enable the Justice Department to prepare reports and recommendations to the President for his ultimate decisions on clemency matters, which are committed to exclusive discretion of the President pursuant to Article II, Section 2, Clause 1 of the Constitution.

(ii) Release of the disclosure accounting, for disclosures pursuant to the routine uses published for this system, would permit the requester to obtain valuable information concerning the nature and scope of a clemency investigation, invade the right of candid and confidential communications among officials concerned with making recommendations to the President in clemency matters, and disclose the identity of persons who furnished information to the Government under an express or implied promise that their identities would be held in confidence.

(2) From subsection (c)(4) because the exemption from subsections (d)(1), (d)(2), (d)(3), and (d)(4) will make notification of disputes inapplicable.

(3) From subsections (d)(1), (d)(2), (d)(3), and (d)(4) is justified for the reasons stated in paragraph (b)(1) of this section.

(4) From subsection (e)(5) is justified for the reasons stated in paragraph (b)(1) of this section.

[Order No. 005–2003, 68 FR 4929, Jan. 31, 2003]

§ 16.80 Exemption of Office of Professional Responsibility System—limited access.

(a) The following system of records is exempt from 5 U.S.C. 552a(c)(3) and (4), (d), (e)(1), (2) and (3), (e)(4)(G) and (H), (e)(5) and (8), (f) and (g):

(1) Office of Professional Responsibility Record Index (JUSTICE/OPR–001).

These exemptions apply only to the extent that information in the system is subject to exemption pursuant to 5 U.S.C. 552a(j)(2), (k)(1), (k)(2), and (k)(5).

(b) Exemptions from the particular subsections are justified for the following reasons:

(1) From subsection (c)(3) because release of the disclosure accounting would enable the subject of an investigation to gain information concerning the existence, nature and scope of the investigation and seriously hamper law enforcement efforts.

(2) From subsections (c)(4), (d), (e)(4)(G) and (H), (f) and (g) because these provisions concern individual access to records and such access might compromise ongoing investigations, reveal confidential informants and constitute unwarranted invasions of the personal privacy of third persons who

provide information in connection with a particular investigation.

(3) From subsections (e)(1) and (5) because the collection of information during an investigation necessarily involves material pertaining to other persons or events which is appropriate in a thorough investigation, even though portions thereof are not ultimately connected to the person or event subject to the final action or recommendation of the Office of Professional Responsibility.

(4) From subsection (e)(2) because collecting the information from the subject would thwart the investigation by placing the subject on notice of the investigation.

(5) From subsections (e)(3) and (e)(8) because disclosure and notice would provide the subject with substantial information which could impede or compromise the investigation. For example, an investigatory subject occupying a supervisory position could, once made aware that a misconduct investigation was ongoing, put undue pressure on subordinates so as to preclude their cooperation with investigators.

(c) The following system of records is exempted from 5 U.S.C. 552a(d).

(1) Freedom of Information/Privacy Act (FOI/PA) Records (JUSTICE/OPR–002).

This exemption applies only to the extent that information in this system is subject to exemption pursuant to 5 U.S.C. 552a(j)(2), (k)(1), and (k)(2). To the extent that information in a record pertaining to an individual does not relate to national defense or foreign policy, official Federal investigations and/or law enforcement matters, the exemption does not apply. In addition, where compliance would not appear to interfere with or adversely affect the overall law enforcement process, the applicable exemption may be waived by OPR.

(d) Exemption from subsection (d) is justified for the following reasons:

(1) From the access and amendment provisions of subsection (d) because access to the records contained in this system of records could inform the subject of an investigation of an actual or potential criminal, civil, or regulatory violation of the existence of that investigation; of the nature and scope of the information and evidence obtained as to his activities; of the identity of confidential sources, witnesses, and law enforcement personnel; and of information that may enable the subject to avoid detection or apprehension. These factors would present a serious impediment to effective law enforcement where they prevent the successful completion of the investigation, endanger the physical safety of confidential sources, witnesses, and law enforcement personnel, and/or lead to the improper influencing of witnesses, the destruction of evidence, or the fabrication of testimony. In addition, granting access to such information could disclose security-sensitive or confidential business information or information that would constitute an unwarranted invasion of the personal privacy of third parties. Finally, access to the records could result in the release of properly classified information which would compromise the national defense or disrupt foreign policy. Amendment of the records would interfere with ongoing investigations and law enforcement activities and impose an enormous administrative burden by requiring investigations to be continuously reinvestigated.

[Order No. 58–81, 46 FR 3509, Jan. 15, 1981, as amended by Order No. 159–99, 64 FR 17977, Apr. 13, 1999]

§ 16.81 Exemption of United States Attorneys Systems—limited access.

(a) The following systems of records are exempt from 5 U.S.C. 552a(c) (3) and (4), (d), (e) (1), (2) and (3), (e)(4) (G) and (H), (e) (5) and (8), (f), and (g):

(1) Citizen Complaint Files (JUSTICE/USA–003).

(2) Civil Case Files (JUSTICE/USA–005).

(3) Consumer Complaints (JUSTICE/USA–006).

(4) Criminal Case Files (JUSTICE/USA–007).

(5) Kline-District of Columbia and Maryland-Stock and Land Fraud Interrelationship Filing System (JUSTICE/USA–009).

(6) Major Crimes Division Investigative Files (JUSTICE/USA–010).

(7) Prosecutor's Management Information System (PROMIS) (JUSTICE/USA–011).

(8) United States Attorney, District of Columbia Superior Court Division, Criminal Files (JUSTICE/USA–013).

(9) Pre-trial Diversion Program Files (JUSTICE/USA–014).

These exemptions apply to the extent that information in these systems is subject to exemption pursuant to U.S.C. 552a(j)(2), (k)(1) and (k)(2).

(b) Exemptions from the particular subsections are justified for the following reasons:

(1) From subsection (c)(3) because the release of the disclosure accounting, for disclosures pursuant to the routine uses published for these systems, would permit the subject of a criminal investigation and/or civil case or matter under investigation, litigation, regulatory or administrative review or action, to obtain valuable information concerning the nature of that investigation, case or matter and present a serious impediment to law enforcement or civil legal activities.

(2) From subsection (c)(4) since an exemption is being claimed for subsection (d), this subsection will not be applicable.

(3) From subsection (d) because access to the records contained in these systems would inform the subject of criminal investigation and/or civil investigation, matter or case of the existence of that investigation, provide the subject of the investigation with information that might enable him to avoid detection, apprehension or legal obligations, and present a serious impediment to law enforcement and other civil remedies.

(4) From subsection (e)(1) because in the course of criminal investigations and/or civil investigations, cases or matters, the U.S. Attorneys often obtain information concerning the violation of laws or civil obligations other than those relating to an active case or matter. In the interests of effective law enforcement and civil litigation, it is necessary that the U.S. Attorneys retain this information since it can aid in establishing patterns of activity and provide valuable leads for other agencies and future cases that may be brought within the U.S. Attorneys' offices.

(5) From subsection (e)(2) because in a criminal investigation the requirement that information be collected to the greatest extent possible from the subject individual would present a serious impediment to law enforcement in that the subject of the investigation would be placed on notice of the existence of the investigation and would therefore be able to avoid detection, apprehension or legal obligations and duties.

(6) From subsection (e)(3) because the requirement that individuals supplying information be provided with a form stating the requirements of subsection (e)(3) would constitute a serious impediment to law enforcement in that it could compromise the existence of a confidential investigation, reveal the identity of confidential sources of information and endanger the life and physical safety of confidential informants.

(7) From subsections (e)(4) (G) and (H) because these systems of records are exempt from individual access pursuant to subsections (j) and (k) of the Privacy Act of 1974.

(8) From subsection (e)(5) because in the collection of information for law enforcement purposes it is impossible to determine in advance what information is accurate, relevant, timely, and complete. With the passage of time, seemingly irrelevant or untimely information may acquire new significance as further investigation brings new details to light and the accuracy of such information can only be determined in a court of law. The restrictions of subsection (e)(5) would restrict the ability of trained investigators and intelligence analysts to exercise their judgment in reporting on investigations and impede the development of intelligence necessary for effective law enforcement.

(9) From subsection (e)(8) because the individual notice requirements of subsection (e)(8) could present a serious impediment to law enforcement as this could interfere with the United States Attorneys' ability to issue subpoenas and could reveal investigative techniques and procedures.

(10) From subsection (f) because these systems of records have been exempted from the access provisions of subsection (d).

(11) From subsection (g) because these systems of records are compiled for law enforcement purposes and have been exempted from the access provisions of subsections (d) and (f).

(c) The following system of records is exempt from 5 U.S.C. 552a(c) (3) and (4), (d), (e) (1), (2) and (3), (e)(4) (G) and (H), (e) (5) and (8), (f), and (g):

(1) Freedom of Information Act/Privacy Act Files (JUSTICE/USA–008)

These exemptions apply to the extent that information in this system is subject to exemption pursuant to 5 U.S.C. 552a(j)(2), (k)(1) and (k)(2).

(d) Because this system contains Department of Justice civil and criminal law enforcement, investigatory records, exemptions from the particular subsections are justified for the following reasons:

(1) From subsection (c)(3) because the release of the disclosure accounting would permit the subject of a criminal investigation and/or civil case or matter under investigation, in litigation, or under regulatory or administrative review or action to obtain valuable information concerning the nature of that investigation, case or matter, and present a serious impediment to law enforcement or civil legal activities.

(2) From subsection (c)(4) because an exemption is being claimed for subsection (d) of the Act (Access to Records), rendering this subsection inapplicable to the extent that this system of records is exempted from subsection (d).

(3) From subsection (d) because access to the records contained in these systems would inform the subject of a criminal or civil investigation, matter or case of the existence of such, and provide the subject with information that might enable him to avoid detection, apprehension or legal obligations, and present a serious impediment to law enforcement and other civil remedies. Amendment of the records would interfere with ongoing criminal law enforcement proceedings and impose an impossible administrative burden by requiring criminal investigations to be continuously reinvestigated.

(4) From subsection (e)(1) because in the course of criminal investigations and/or civil investigations, cases or matters, the U.S. Attorneys often obtain information concerning the violation of laws or civil obligations other than those relating to an active case or matter. In the interests of effective law enforcement and civil litigation, it is necessary that the U.S. Attorneys retain this information since it can aid in establishing patterns of activity and provide valuable leads for other agencies and future cases that may be brought within the U.S. Attorneys' offices.

(5) From subsection (e)(2) because to collect information to the greatest extent possible from the subject individual of a criminal investigation or prosecution would present a serious impediment to law enforcement in that the subject of the investigation would be placed on notice of the existence of the investigation and would therefore be able to avoid detection, apprehension, or legal obligations and duties.

(6) From subsection (e)(3) because to provide individuals supplying information with a form stating the requirements of subsection (e)(3) would constitute a serious impediment to law enforcement in that it could compromise the existence of a confidential investigation, reveal the identity of confidential sources of information, and endanger the life and physical safety of confidential informants.

(7) From subsections (e)(4) (G) and (H) because this system of records is exempt from the individual access provisions of subsection (d) and the rules provisions of subsection (f).

(8) From subsection (e)(5) because in the collection of information for law enforcement purposes it is impossible to determine in advance what information is accurate, relevant, timely, and complete. With the passage of time, seemingly irrelevant or untimely information may acquire new significance as further investigation brings new details to light and the accuracy of such information can only be determined in a court of law. The restrictions of subsection (e)(5) would inhibit the ability of trained investigator and intelligence analysts to exercise their judgment in reporting on investigations and impede the development of intelligence necessary for effective law enforcement.

(9) From subsection (e)(8) because the individual notice requirements of subsection (e)(8) could present a serious impediment to law enforcement as this could interfere with the U.S. Attorneys' ability to issue subpoenas and could reveal investigative techniques and procedures.

(10) From subsection (f) because this system has been exempted from the individual access provisions of subsection (d).

(11) From subsection (g) because the records in this system are generally compiled for law enforcement purposes and are exempt from the access provisions of subsections (d) and (f), rendering subsection (g) inapplicable.

(e) The following systems of records are exempt from 5 U.S.C. 552a(d)(1) and (e)(1):

(1) Assistant U.S. Attorneys Applicant Records System (JUSTICE/USA–016).

(2) Appointed Assistant U.S. Attorneys Personnel System (JUSTICE/USA–017).

These exemptions apply only to the extent that information in these systems is subject to exemption pursuant to 5 U.S.C. 552a(k)(5).

(f) Exemptions from the particular subsections are justified for the following reasons:

(1) From subsection (d)(1) because many persons are contacted who, without an assurance of anonymity, refuse to provide information concerning a candidate for an Assistant U.S. Attorney position. Access could reveal the identity of the source of the information and constitute a breach of the promise of confidentiality on the part of the Department of Justice. Such breaches ultimately would restrict the free flow of information vital to a determination of a candidate's qualifications and suitability.

(2) From subsection (e)(1) because in the collection of information for investigative and evaluative purposes, it is impossible to determine in advance what exact information may be of assistance in determining the qualifications and suitability of a candidate. Information which may appear irrelevant, when combined with other seemingly irrelevant information, can on occasion provide a composite picture of a candidate for a position which assists in determining whether that candidate should be nominated for appointment.

(g) The *Giglio* Impeachment Files (JUSTICE/USA–018) system of records is exempt from 5 U.S.C. 552a subsections (c)(4), (e)(2), (e)(5), and (g) of the Privacy Act, pursuant to 5 U.S.C. 552a(j)(2), and exempt from subsections (c)(3), (d), (e)(1), (e)(4)(G) and (H), and (f), pursuant to 5 U.S.C. 552a(j)(2) and (k)(2). These exemptions apply to the extent that information in this system is subject to exemption pursuant to 5 U.S.C. 552a(j)(2) and (k)(2).

(h) Exemptions from the particular subsections are justified for the following reasons:

(1) From subsection (c)(3); because an exemption is being claimed for subsection (d), this subsection will not be applicable.

(2) From subsection (c)(4); because an exemption is being claimed for subsection (d), this subsection will not be applicable.

(3) From subsection (d); because access to the records contained in these systems is not necessary or may impede an ongoing investigation. Most information in the records is derivative from the subject's employing agency files, and individual access will be through the employing agency's files. Additionally, other information in the records may be related to allegations against an agent or witness that are currently being investigated. Providing access to this information would impede the ongoing investigation.

(4) From subsection (e)(1); because in the interest of effective law enforcement and criminal prosecution, *Giglio* records will be retained because they could later be relevant in a different case; however, this relevance cannot be determined in advance.

(5) From subsection (e)(2); because the nature of the records in this system, which are used to impeach or demonstrate bias of a witness, requires that the information be collected from others.

(6) From subsections (e)(4)(G) and (H); because this system of records is exempt from individual access pursuant to subsections (j) and (k) of the Privacy Act of 1974.

(7) From subsection (e)(5); because the information in these records is not being used to make a determination about the subject of the records. According to constitutional principles of fairness articulated by the Supreme Court in *United States* v. *Giglio*, the records are required to be disclosed to criminal defendants to ensure fairness of criminal proceedings.

(8) From subsection (f); because records in this system have been exempted from the access provisions of subsection (d).

(9) From subsection (g); because records in this system are compiled for law enforcement purposes and have been exempted from the access provisions of subsections (d) and (f).

(i) Consistent with the legislative purpose of the Privacy Act of 1974, the Executive Office for United States Attorneys will grant access to nonexempt material in records which are maintained by the U.S. Attorneys. Disclosure will be governed by the Department's Privacy regulations, but will be limited to the extent that the identity of confidential sources will not be compromised; subjects of an investigation of an actual or potential criminal, civil or regulatory violation will not be alerted to the investigation; the physical safety of witnesses, informants and law enforcement personnel will not be endangered, the privacy of third parties will not be violated; and that the disclosure would not otherwise impede effective law enforcement. Whenever possible, information of the above nature will be deleted from the requested documents and the balance made available. The controlling principle behind this limited access is to allow disclosures except those indicated above. The decisions to release information from these systems will be made on a case-by-case basis.

[Order No. 645–76, 41 FR 12640, Mar. 26, 1976, as amended by Order No. 716–77, 42 FR 23506, May 9, 1977; Order No. 738–77, 42 FR 38177, July 27, 1977; Order No. 6–86, 51 FR 15476, Apr. 24, 1986; Order No. 57–91, 56 FR 58306, Nov. 19, 1991; Order No. 224–2001, 66 FR 17809, Apr. 4, 2001]

§ 16.82 Exemption of the National Drug Intelligence Center Data Base—limited access.

(a) The following system of records is exempted pursuant to the provisions of 5 U.S.C. 552a(j)(2) from subsections (c)(3) and (4); (d); (e) (1), (2), and (3); (e)(4)(I); (e) (5) and (8); and (g) of 5 U.S.C. 552a. In addition, the following system of records is exempted pursuant to the provisions of 5 U.S.C. 552a (k)(1) and (k)(2) from subsections (c)(3), (d), and (e)(1) and (e)(4)(I) of 5 U.S.C. 552a:

(1) National Drug Intelligence Center Data Base (JUSTICE/NDIC–001).

(2) [Reserved]

(b) These exemptions apply only to the extent that information in this system is subject to exemption pursuant to 5 U.S.C. 552a(j)(2), (k)(1), and (k)(2). Where compliance would not appear to interfere with or adversely affect the law enforcement process, and/or where it may be appropriate to permit individuals to contest the accuracy of the information collected, e.g., public source materials, the applicable exemption may be waived, either partially or totally, by the National Drug Intelligence Center (NDIC). Exemptions from the particular subsections are justified for the following reasons:

(1) From subsection (c)(3) for the same reasons that the system is exempted from the provisions of subsection (d).

(2) From subsection (c)(4) because this system is exempt from the access provisions of subsection (d) pursuant to subsection (j)(2) of the Privacy Act.

(3) From subsection (d) because disclosure to the subject could alert the subject of an investigation pertaining to narcotic trafficking or related activity of the fact and nature of the investigation, and/or of the investigative interest of NDIC and other intelligence or law enforcement agencies (including those responsible for civil proceedings related to laws against drug trafficking); lead to the destruction of evidence, improper influencing of witnesses, fabrication of testimony, and/or flight of the subject; reveal the details of a sensitive investigative or intelligence technique, or the identity of a confidential source; or otherwise impede, compromise, or interfere with investigative efforts and other related

law enforcement and/or intelligence activities. In addition, disclosure could invade the privacy of third parties and/or endanger the life and safety of law enforcement personnel, confidential informants, witnesses, and potential crime victims. Finally, access to records could result in the release of properly classified information that could compromise the national defense or foreign policy. Amendment of the records would interfere with ongoing investigations and law enforcement activities and impose an impossible administrative burden by requiring investigations, analyses, and reports to be continuously reinvestigated and revised.

(4) From subsection (e)(1) because, in the course of its acquisition, collation, and analysis of information, NDIC will need to retain information not immediately shown to be relevant to counterdrug law enforcement to establish patterns of activity and to assist other agencies charged with the enforcement of laws and regulations regarding drug trafficking and charged with the acquisition of intelligence related to international aspects of drug trafficking. This consideration applies equally to information acquired from, or collated or analyzed for, both law enforcement agencies and agencies of the U.S. foreign intelligence community.

(5) From subsection (e)(2) because application of this provision could present a serious impediment to law enforcement in that it would put the subject of an investigation, study or analysis on notice of the fact of such investigation, study, or analysis, thereby permitting the subject to engage in conduct intended to frustrate the activity; because, in some circumstances, the subject of an investigation may not be required to provide to investigators certain information; and because thorough analysis and investigation may require seeking information from a number of different sources.

(6) From subsection (e)(3) (to the extent applicable) because the requirement that individuals supplying information be provided a form stating the requirements of subsection (e)(3) would constitute a serious impediment to law enforcement in that it could compromise the existence of a confidential investigation and reveal the identity of confidential informants and endanger their lives and safety.

(7) From subsection (e)(4)(I), to the extent that this subsection is interpreted to require more detail regarding the record sources in this system than have been published in the FEDERAL REGISTER. Should the subsection be so interpreted, exemption from this provision is necessary to protect the confidentiality of the sources of criminal and other law enforcement information and to protect the privacy and physical safety of witnesses and informants. Furthermore, greater specificity concerning the sources of properly classified records could compromise national defense or foreign policy.

(8) From subsection (e)(5) because the acquisition, collation, and analysis of information for law enforcement purposes does not permit advance determination whether such information is accurate or relevant, nor can such information be limited to that which is complete or apparently timely. Information of this type often requires further analysis and investigation to develop into a comprehensive whole that which is otherwise incomplete or even fragmentary. Moreover, its accuracy is continually subject to analysis and review, and, upon careful examination, seemingly irrelevant or untimely information may acquire added significance as additional information brings new details to light. The restrictions imposed by subsection (e)(5) would restrict the ability of trained investigators and intelligence analysts to exercise their judgment in collating and analyzing information and would impede the development of criminal intelligence necessary for effective law enforcement.

(9) From subsection (e)(8) because the individual notice requirements of subsection (e)(8) could present a serious impediment to law enforcement by revealing investigative techniques, procedures, or evidence.

(10) From subsection (g) to the extent that the system is exempt from subsection (d).

[Order No. 78–93, 58 FR 41038, Aug. 2, 1993]

§ 16.83 Exemption of the Executive Office for Immigration Review System—limited access.

(a) The following system of records is exempt from 5 U.S.C. 552a(d):

(1) The Executive Office for Immigration Review's Records and Management Information System (JUSTICE/EOIR–001).

This exemption applies only to the extent that information in the system is subject to exemption pursuant to 5 U.S.C. 552a(k) (1) and (2).

(b) Exemption from the particular subsections are justified for the following reasons:

(1) From subsection (d) because access to information which has been properly classified pursuant to an Executive Order could have an adverse effect on the national security. In addition, from subsection (d) because unauthorized access to certain investigatory material could compromise ongoing or potential investigations; reveal the identity of confidential informants; or constitute unwarranted invasions of the personal privacy of third parties.

(2) From subsection (d) (2), (3), and (4) because the record of proceeding constitutes an official record which includes transcripts of quasi-judicial administrative proceedings, investigatory materials, evidentiary materials such as exhibits, decisional memoranda, and other case-related papers. Administrative due process could not be achieved by the ex parte ''correction'' of such materials by the individual who is the subject thereof.

(c) The following system of records is exempted form 5 U.S.C. 552a(d).

(1) Practitioner Compliant/Disciplinary Files (JUSTICE/EOIR 003). This exemption applies only to the extent that information in this system is subject to exemption pursuant to 5 U.S.C. 552a(j)(2), (k)(1), and (k)(2). To the extent that information in a record pertaining to an individual does not relate to national defense or foreign policy, official Federal investigations and/or law enforcement matters, the exemption does not apply. In addition, where compliance would not appear to interfere with or adversely affect the overall law or regulatory enforcement process, the applicable exemption may be waived by the Executive Office for Immigration Review.

(d) Exemption from subsection (d) is justified for the following reasons:

(1) From the access and amendment provisions of subsection (d) because access to the records contained in this system of records could inform the subject of the investigation of an actual or potential criminal, civil, or regulatory violation or the existence of that investigation; of the nature and scope of the information and evidence obtained as to the subject's activities; of the identity of confidential sources, witnesses, and law enforcement personnel; and of information that may enable the subject to avoid detection or apprehension. These factors would present a serious impediment to effective law and regulatory enforcement where they prevent the successful completion of the investigation, endanger the physical safety of confidential sources, witnesses, and law enforcement personnel, and/or lead to the improper influencing of witnesses, the destruction of evidence, or the fabrication of testimony. In addition, granting access to such information could disclose security-sensitive or confidential business information or information that would constitute an unwarranted invasion of the personal privacy of third parties. Finally, access to the records could result in the release of properly classified information which would compromise the national defense or disrupt foreign policy. Amendment of the records would interfere with ongoing investigations and law enforcement activities and impose an enormous administrative burden by requiring investigations to be continuously reinvestigated.

[Order No. 18–86, 51 FR 32305, Sept. 11, 1986, as amended by Order No. 180–99, 64 FR 61787, Nov. 15, 1999]

§ 16.84 Exemption of Immigration Appeals System.

(a) The following system of records is exempt from 5 U.S.C. 552a(d) (2), (3) and (4):

(1) Decisions of the Board of Immigration Appeals (JUSTICE/BIA–001).

This exemption applies only to the extent that information in this system is subject to exemption pursuant to 5 U.S.C. 552a(k).

(b) Exemptions from the particular subsections are justified for the following reasons:

(1) From subsections (d) (2), (3) and (4) because the decisions reflected constitute official records of opinions rendered in quasi-judicial proceedings. Administrative due process could not be achieved by the ex parte ''correction'' of such opinions by the subject of the opinion.

§ 16.85 Exemption of U.S. Parole Commission—limited access.

(a) The following systems of records are exempt from 5 U.S.C. 552a (c) (3) and (4), (d), (e) (2) and (3), (e)(4) (G) and (H), (e)(8), (f) and (g):

(1) Docket Scheduling and Control System (JUSTICE/PRC–001).

(2) Inmate and Supervision Files System (JUSTICE/PRC–003).

(3) Labor and Pension Case, Legal File, and General Correspondence System (JUSTICE/PRC–004).

(4) Statistical, Educational and Developmental System (JUSTICE/PRC–006).

(5) Workload Record, Decision Result, and Annual Report System (JUSTICE/PRC–007).

These exemptions apply only to the extent that information in these systems is subject to exemptions pursuant to 5 U.S.C. 552a(j)(2).

(b) Exemptions from the particular subsections are justified for the following reasons:

(1) From subsection (c)(3) because revealing disclosure of accountings to inmates and persons on supervision could compromise legitimate law enforcement activities and U.S. Parole Commission responsibilities.

(2) From subsection (c)(4) because the exemption from subsection (d) will make notification of disputes inapplicable.

(3) From subsection (d) because this is essential to protect internal processes by which Commission personnel are able to formulate decisions and policies with regard to federal prisoners and persons under supervision, to prevent disclosures of information to federal inmates or persons on supervision that would jeopardize legitimate correctional interests of security, custody, supervision, or rehabilitation, to permit receipt of relevant information from other federal agencies, state and local law enforcement agencies, and federal and state probation and judicial offices, to allow private citizens to express freely their opinions for or against parole, to allow relevant criminal history type information of co-defendants to be kept in files, to allow medical, psychiatric and sociological material to be available to professional staff, and to allow a candid process of fact selection, opinion formulation, evaluation and recommendation to be continued by professional staff. The legal files contain case development material and, in addition to other reasons, should be exempt under the attorney-client privilege. Each labor or pension applicant has had served upon him the material in his file which he did not prepare and may see his own file at any time.

(4) From subsection (e)(2) because primary collection of information directly from federal inmates or persons on supervision about criminal sentence, criminal records, institutional performance, readiness for release from custody, or need to be returned to custody is highly impractical and inappropriate.

(5) From subsection (e)(3) because application of this provision to the operations and collection of information by the Commission which is primarily from sources other than the individual, is inappropriate.

(6) From subsections (e)(4) (G) and (H) because exemption from the access provisions of (d) makes publication of agency procedures under (d) inapplicable.

(7) From subsection (e)(8) because the nature of the Commission's activities renders notice of compliance with compulsory legal process impractical.

(8) From subsection (f) because exemption from the provisions of subsection (d) will render compliance with provisions of this subsection inapplicable.

(9) From subsection (g) because exemption from the provisions of subsection (d) will render the provisions on suits to enforce (d) inapplicable.

(c) Consistent with the legislative purpose of the Privacy Act of 1974 the U.S. Parole Commission will initiate a

procedure whereby present and former prisoners and parolees may obtain copies of material in files relating to them that are maintained by the U.S. Parole Commission. Disclosure of the contents will be affected by providing copies of documents to requesters through the mails. Disclosure will be made to the same extent as would be made under the substantive exemptions of the Parole Commission and Reorganization Act of 1976 (18 U.S.C. 4208) and Rule 32 of the Federal Rules of Criminal Procedure. The procedure relating to disclosure of documents may be changed generally in the interest of improving the Commission's system of disclosure or when required by pending or future decisions and directions of the Department of Justice.

[Order No. 645–76, 41 FR 12640, Mar. 26, 1976, as amended by Order No. 14–78, 43 FR 45993, Oct. 5, 1978; Order No. 899–80, 45 FR 43703, June 30, 1980; Order No. 6–86, 51 FR 15477, Apr. 24, 1986]

§ 16.88 Exemption of Antitrust Division Systems—limited access.

(a) The following system of records is exempt from 5 U.S.C. 552a (c)(3), (d), (e)(4) (G) and (H), and (f):

(1) Antitrust Caseload Evaluation System (ACES)—Monthly Report (JUSTICE/ATR–006).

These exemptions apply only to the extent that information in this system is subject to exemption pursuant to 5 U.S.C. 552a (k)(2).

(b) Exemption from the particular subsections are justified for the following reasons:

(1) From subsection (c)(3) because information in this system is maintained in aid of ongoing antitrust enforcement investigations and proceedings. The release of the accounting of disclosures made under subsection (b) of the Act would permit the subject of an investigation of an actual or potential criminal or civil violation to determine whether he is the subject of an investigation. Disclosure of the accounting would therefore present a serious impediment to antitrust law enforcement efforts.

(2) From subsection (d) because access to the information retrievable from this system and compiled for law enforcement purposes could result in the premature disclosure of the identity of the subject of an investigation of an actual or potential criminal or civil violation and information concerning the nature of that investigation. This information could enable the subject to avoid detection or apprehension. This would present a serious impediment to effective law enforcement since the subject could hinder or prevent the successful completion of the investigation. Further, confidential business and financial information, the identities of confidential sources of information, third party privacy information, and statutorily confidential information such as grand jury information must be protected from disclosure.

(3) From subsections (e)(4)(G) and (H), and (f) because this system is exempt from the individual access provisions of subsection (d).

(c) The following system of records is exempt from 5 U.S.C. 552a (c)(3), (d), (e)(4)(G) and (H), and (f):

(1) Freedom of Information/Privacy—Requester/Subject Index File (JUSTICE/ATR–008).

These exemptions apply to the extent that information in this system is subject to exemption pursuant to 5 U.S.C. 552a (k)(2).

(d) Because this system contains Department of Justice civil and criminal law enforcement, investigatory records, exemptions from the particular subsections are justified for the following reasons:

(1) From subsection (c)(3) because the release of the accounting of disclosures made under subsection (b) of the Act would permit the subject of an investigation of an actual or potential criminal or civil violation to determine whether he is the subject of an investigation. Disclosure of accounting would therefore present a serious impediment to antitrust law enforcement efforts.

(2) From subsection (d) because access to information in this system could result in the premature disclosure of the identity of the subject of an investigation of an actual or potential criminal or civil violation and information concerning the nature of the investigation. This information could enable the subject to avoid detection or

apprehension. This would present a serious impendiment to effective law enforcement since the subject could hinder or prevent the successful completion of the investigation. Further, confidential business and financial information, the identities of confidential sources of information, third party privacy information, and statutorily confidential information such as grand jury information must be protected from disclosure.

(3) From subsections (e)(4)(G) and (H), and (f) because this system is exempt from the individual access provisions of subsection (d).

[Order No. 2–86, 51 FR 884, Jan. 9, 1986]

§ 16.89 Exemption of Civil Division Systems—limited access.

(a) The following systems of records are exempted pursuant to 5 U.S.C. 552a(j)(2) from subsections (c) (3) and (4), (d), (e)(1), (e)(2), (e)(3), (e)(4) (G) and (H), (e)(5), (e)(8), and (g); in addition, the following systems of records are exempted pursuant to 5 U.S.C. 552a (k)(1) and (k)(2) from subsections (c)(3), (d), (e)(1), (e)(4) (G) and (H):

(1) Civil Division Case File System, JUSTICE/CIV–001.

(2) Freedom of Information/Privacy Acts File System, JUSTICE/CIV–005.

These exemptions apply only to the extent that information in these systems is subject to exemption pursuant to 5 U.S.C. 552a (j)(2), (k)(1) and (k)(2).

(b) Only that information which relates to the investigation, prosecution, or defense of actual or potential criminal or civil litigation, or which has been properly classified in the interest of national defense and foreign policy is exempted for the reasons set forth from the following subsections:

(1) *Subsection (c)(3).* To provide the subject of a criminal or civil matter or case under investigation with an accounting of disclosures of records concerning him or her would inform that individual (and others to whom the subject might disclose the records) of the existence, nature, or scope of that investigation and thereby seriously impede law enforcement efforts by permitting the record subject and others to avoid criminal penalties and civil remedies.

(2) *Subsections (c)(4), (e)(4) (G) and (H), and (g).* These provisions are inapplicable to the extent that these systems of records are exempted from subsection (d).

(3) *Subsection (d).* To the extent that information contained in these systems has been properly classified, relates to the investigation and/or prosecution of grand jury, civil fraud, and other law enforcement matters, disclosure could compromise matters which should be kept secret in the interest of national security or foreign policy; compromise confidential investigations or proceedings; hamper sensitive civil or criminal investigations; impede affirmative enforcement actions based upon alleged violations of regulations or of civil or criminal laws; reveal the identity of confidential sources; and result in unwarranted invasions of the privacy of others. Amendment of the records would interfere with ongoing criminal law enforcement proceedings and impose an impossible administrative burden by requiring criminal investigations to be continuously reinvestigated.

(4) *Subsection (e)(1).* In the course of criminal or civil investigations, cases, or matters, the Civil Division may obtain information concerning the actual or potential violation of laws which are not strictly within its statutory authority. In the interest of effective law enforcement, it is necessary to retain such information since it may establish patterns of criminal activity or avoidance of other civil obligations and provide leads for Federal and other law enforcement agencies.

(5) *Subsection (e)(2).* To collect information from the subject of a criminal investigation or prosecution would present a serious impediment to law enforcement in that the subject (and others to whom the subject might be in contact) would be informed of the existence of the investigation and would therefore be able to avoid detection or apprehension, to influence witnesses improperly, to destroy evidence, or to fabricate testimony.

(6) *Subsection (e)(3).* To comply with this requirement during the course of a criminal investigation or prosecution could jeopardize the investigation by

disclosing the existence of a confidential investigation, revealing the identity of witnesses or confidential informants, or impeding the information gathering process.

(7) *Subsection (e)(5)*. In compiling information for criminal law enforcement purposes, the accuracy, completeness, timeliness and relevancy of the information obtained cannot always be immediately determined. As new details of an investigation come to light, seemingly irrelevant or untimely information may acquire new significance and the accuracy of such information can often only be determined in a court of law. Compliance with this requirement would therefore restrict the ability of government attorneys in exercising their judgment in developing information necessary for effective law enforcement.

(8) *Subsection (e)(8)*. To serve notice would give persons sufficient warning to evade law enforcement efforts.

(c) The following system of records is exempted pursuant to 5 U.S.C. 552a(j)(2) from subsections (c) (3) and (4), (d), (e)(1) and (e)(5); in addition, this system is also exempted pursuant to 5 U.S.C. 552a(k)(2) from subsections (c)(3), (d), and (e)(1).

Consumer Inquiry/Investigatory System, JUSTICE/CIV–006.

These exemptions apply only to the extent that information in this system of records is subject to exemption pursuant to 5 U.S.C. 552a (j)(2) and (k)(2).

(d) Only that information compiled for criminal or civil law enforcement purposes is exempted for the reasons set forth from the following subsections:

(1) *Subsections (c)(3)*. This system occasionally contains investigatory material based on complaints of actual or alleged criminal or civil violations. To provide the subject of a criminal or civil matter or case under investigation with an accounting of disclosures of records concerning him/her would inform that individual of the existence, nature, or scope of that investigation, and thereby seriously impede law enforcement efforts by permitting the record subject and other persons to whom he might disclose the records to avoid criminal penalties and civil remedies.

(2) *Subsections (c)(4)*. This subsection is inapplicable to the extent that an exemption is being claimed for subsection (d).

(3) *Subsection (d)*. Disclosure of information relating to the investigation of complaints of alleged violation of criminal or civil law could interfere with the investigation, reveal the identity of confidential sources, and result in an unwarranted invasion of the privacy of others. Amendment of the records would interfere with ongoing criminal law enforcement proceedings and impose an impossible administrative burden by requiring criminal investigations to be continuously reinvestigated.

(4) *Subsection (e)(1)*. In the course of criminal or civil investigations, cases, or matters, the Civil Division may obtain information concerning the actual or potential violation of laws which are not strictly within its statutory authority. In the interest of effective law enforcement, it is necessary to retain such information since it may establish patterns of criminal activity or avoidance of other civil obligations and provide leads for Federal and other law enforcement agencies.

(5) *Subsection (e)(5)*. In compiling information for criminal law enforcement purposes, the accuracy, completeness, timeliness and relevancy of the information obtained cannot always be immediately determined. As new details of an investigation come to light, seemingly irrelevant or untimely information may acquire new significance and the accuracy of such information can often only be determined in a court of law. Compliance with this requirement would therefore restrict the ability of government attorneys in exercising their judgment in developing information necessary for effective law enforcement.

(e) The following system of records is exempt pursuant to 5 U.S.C. 552a (j)(2) and (k)(2) from subsection (d):

Congressional and Citizen Correspondence File, JUSTICE/CIV–007.

This exemption applies only to the extent that information in this system is

subject to exemption pursuant to 5 U.S.C 552a (j)(2) and (k)(2).

(f) Only that portion of the Congressional and Citizen Correspondence File maintained by the Communications Office which consists of criminal or civil investigatory information is exempted for the reasons set forth from the following subsection:

(1) *Subsection (d)*. Disclosure of investigatory information would jeopardize the integrity of the investigative process, disclose the identity of individuals who furnished information to the government under an express or implied promise that their identities would be held in confidence, and result in an unwarranted invasion of the privacy of others. Amendment of the records would interfere with ongoing criminal law enforcement proceedings and impose an impossible administrative burden by requiring criminal investigations to be continuously reinvestigated.

[Order No. 27–88, 54 FR 113, Jan. 4, 1989]

§ 16.90 Exemption of Civil Rights Division Systems.

(a) The following system of records is exempted from subsections (c)(3) and (4); (d)(1), (2), (3) and (4); (e)(1), (2), (3), (5), and (8); and (g) of the Privacy Act pursuant to 5 U.S.C. 552a (j) and (k): Central Civil Rights Division Index File and Associated Records (JUSTICE/CRT–001). These exemptions apply only to the extent that information in a record is subject to exemption pursuant to 5 U.S.C. 552a (j)(2), (k)(1) and (k)(2).

(b) Exemptions from the particular subsections are justified for the following reasons:

(1) *Subsection (c)(3)*. To provide the subject of a criminal, civil, or administrative matter or case under investigation with an accounting of disclosures of records concerning him or her could inform that individual of the existence, nature, or scope of an actual or potential criminal or civil violation to gain valuable information concerning the nature and scope of the investigation, to determine whether he or she is the subject of the investigation, and seriously impede law enforcement efforts by permitting the record subject and other persons to whom he or she might disclose the records to avoid criminal penalties, civil remedies, or administrative measures.

(2) *Subsection (c)(4)*. This subsection is inapplicable to the extent that an exemption is being claimed for subsection (d).

(3) *Subsection (d)(1)*. Disclosure of investigatory information could interfere with the investigation, reveal the identity of confidential sources, and result in an unwarranted invasion of the privacy of others. Disclosure of classified national security information would cause damage to the national security of the United States. In addition, these records may be subject to protective orders entered by federal courts to protect their confidentiality. Further, many of the records contained in this system are copies of documents which are the property of state agencies and were obtained under express or implied promises to strictly protect their confidentiality.

(4) *Subsection (d)(2)*. Amendment of the records could interfere with ongoing criminal or civil law enforcement proceedings and impose an impossible administrative burden by requiring investigations to be continuously reinvestigated.

(5) *Subsection (d)(3) and (4)*. These subsections are inapplicable to the extent exemption is claimed from (d)(1) and (2).

(6) *Subsection (e)(1)*. It is often impossible to determine in advance if investigatory records contained in this system are accurate, relevant, timely and complete, but, in the interests of effective law enforcement, it is necessary to retain this information to aid in establishing patterns of activity and provide investigative leads.

(7) *Subsection (e)(2)*. To collect information from the subject individual could serve notice that he or she is the subject of a criminal investigation and thereby present a serious impediment to such investigation.

(8) *Subsection (e)(3)*. To inform individuals as required by this subsection could reveal the existence of a criminal or civil investigation and compromise investigative efforts.

(9) *Subsection (e)(5)*. It is often impossible to determine in advance if investigatory records contained in this system are accurate, relevant, timely and complete, but, in the interests of effective law enforcement, it is necessary to retain this information to aid in establishing patterns of activity and provide investigative leads.

(10) *Subsection (e)(8)*. To serve notice could give persons sufficient warning to evade investigative efforts.

(11) *Subsection (g)*. This subsection is inapplicable to the extent that the system is exempt from other specific subsections of the Privacy Act.

(c) The following system of records is exempted from subsections (d)(1), (2), (3) and (4) of the Privacy Act pursuant to 5 U.S.C. 552a (k): ''Files on Employment Civil Rights Matters Referred by the Equal Employment Opportunity Commission (JUSTICE/CRT–007).'' These exemptions apply only to the extent that information in a record is subject to exemption pursuant to 5 U.S.C. 552a (k)(2).

(d) Exemptions from the particular subsections are justified for the following reasons:

(1) *Subsection (d)(1)*. Disclosure of investigatory information could interfere with the investigation, reveal the identity of confidential sources, and result in an unwarranted invasion of the privacy of others. In addition, these records may be subject to protective orders entered by federal courts to protect their confidentiality. Further, many of the records contained in this system are copies of documents which are the property of state agencies and were obtained under express or implied promises to strictly protect their confidentiality.

(2) *Subsection (d)(2)*. Amendment of the records could interfere with ongoing criminal or civil law enforcement proceedings and impose an impossible administrative burden by requiring investigations to be continuously reinvestigated.

(3) *Subsection (d)(1), (2), (3) and (4)*. This system contains investigatory material compiled by the Equal Opportunity Commission pursuant to its authority under 42 U.S.C. 2000e–8. Titles 42 U.S.C. 2000e–5(b), 42 U.S.C. 2000e–8(e), and 44 U.S.C. 3508 make it unlawful to make public in any manner whatsoever any information obtained by the Commission pursuant to the authority.

(4) *Subsection (d)(3) and (4)*. These subsections are inapplicable to the extent exemption is claimed from (d)(1) and (2).

[Order No. 019–2003, 68 FR 61622, Oct. 29, 2003]

§ 16.91 Exemption of Criminal Division Systems—limited access, as indicated.

(a) The following systems of records are exempted pursuant to the provisions of 5 U.S.C. 552a(j)(2) from subsections (c) (3) and (4), (d), (e) (1), (2) and (3), (e)(4) (G), (H) and (I), (e) (5) and (8), (f) and (g) of 5 U.S.C. 552a; in addition, the following systems of records are exempted pursuant to the provisions of 5 U.S.C. 552a (k)(1) and (k)(2) from subsections (c)(3), (d), (e)(1), (e)(4) (G), (H), and (I), and (f) of 5 U.S.C. 552a:

(1) Central Criminal Division, Index File and Associated Records System of Records (JUSTICE/CRM–001)—Limited Access. This system of records and associated exemptions is adopted by and applies with equal force and effect to the National Security Division, until modified, superseded, or revoked in accordance with law.

(2) General Crimes Section, Criminal Division, Central Index File and Associated Records System of Records (JUSTICE/CRM–004)—Limited Access.

These exemptions apply to the extent that information in those systems are subject to exemption pursuant to 5 U.S.C. 552a (j)(2), (k)(1) and (k)(2).

(b) The systems of records listed under paragraphs (b)(1) and (b)(2) of this section are exempted, for the reasons set forth, from the following provisions of 5 U.S.C. 552a:

(1). (c)(3). The release of the disclosure accounting for disclosures made pursuant to subsection (b) of the Act, including those permitted under the routine uses published for these systems of records, would permit the subject of an investigation of an actual or potential criminal, civil, or regulatory violation to determine whether he is the subject of investigation, or to obtain valuable information concerning the nature of that investigation, and

the information obtained, or the identity of witnesses and informants and would therefore present a serious impediment to law enforcement. In addition, disclosure of the accounting would amount to notice to the individual of the existence of a record; such notice requirement under subsection (f)(1) is specifically exempted for these systems of records.

(2). (c)(4). Since an exemption is being claimed for subsection (d) of the Act (Access to Records) this subsection is inapplicable to the extent that these systems of records are exempted from subsection (d).

(3). (d). Access to the records contained in these systems would inform the subject of an investigation of an actual or potential criminal, civil, or regulatory violation of the existence of that investigation, or the nature and scope of the information and evidence obtained as to his activities, of the identity of witnesses and informants, or would provide information that could enable the subject to avoid detection or apprehension. These factors would present a serious impediment to effective law enforcement because they could prevent the successful completion of the investigation, endanger the physical safety of witnesses or informants, and lead to the improper influencing of witnesses, the destruction of evidence, or the fabrication of testimony.

(4). (e)(1). The notices of these systems of records published in the FEDERAL REGISTER set forth the basic statutory or related authority for maintenance of this system. However, in the course of criminal or other law enforcement investigations, cases, and matters, the Criminal Division or its components will occasionally obtain information concerning actual or potential violations of law that are not strictly within its statutory or other authority or may compile information in the course of an investigation which may not be relevant to a specific prosecution. In the interests of effective law enforcement, it is necessary to retain such information in these systems of records since it can aid in establishing patterns of criminal activity and can provide valuable leads for federal and other law enforcement agencies.

(5). (e)(2). In a criminal investigation or prosecution, the requirement that information be collected to the greatest extent practicable from the subject individual would present a serious impediment to law enforcement because the subject of the investigation or prosecution would be placed on notice as to the existence of the investigation and would therefore be able to avoid detection or apprehension, to influence witnesses improperly, to destroy evidence, or to fabricate testimony.

(6). (e)(3). The requirement that individuals supplying information be provided with a form stating the requirements of subsection (e)(3) would constitute a serious impediment to law enforcement in that it could compromise the existence of a confidential investigation or reveal the identity of witnesses or confidential informants.

(7). (e)(4) (G) and (H). Since an exemption is being claimed for subsections (f) (Agency Rules) and (d) (Access to Records) of the Act these subsections are inapplicable to the extent that these systems of records are exempted from subsections (f) and (d).

(8). (e)(4)(I). The categories of sources of the records in these systems have been published in the FEDERAL REGISTER in broad generic terms in the belief that this is all that subsection (e)(4)(I) of the Act requires. In the event, however, that this subsection should be interpreted to require more detail as to the identity of sources of the records in these systems, exemption from this provision is necessary in order to protect the confidentiality of the sources of criminal and other law enforcement information. Such exemption is further necessary to protect the privacy and physical safety of witnesses and informants.

(9). (e)(5). In the collection of information for criminal law enforcement purposes it is impossible to determine in advance what information is accurate, relevant, timely, and complete. With the passage of time, seemingly irrelevant or untimely information may acquire new significance as further investigation brings new details to light and the accuracy of such information can often only be determined in a court

of law. The restrictions of subsection (e)(5) would restrict the ability of trained investigators, intelligence analysts, and government attorneys in exercising their judgment in reporting on information and investigations and impede the development of criminal or other intelligence necessary for effective law enforcement.

(10). (e)(8). The individual notice requirements of subsection (e)(8) could present a serious impediment to law enforcement as this could interfere with the ability to issue warrants or subpoenas and could reveal investigative techniques, procedures, or evidence.

(11). (f). Procedures for notice to an individual pursuant to subsection (f)(1) as to the existence of records pertaining to him dealing with an actual or potential criminal, civil, or regulatory investigation or prosecution must be exempted because such notice to an individual would be detrimental to the successful conduct and/or completion of an investigation or prosecution pending or future. In addition, mere notice of the fact of an investigation could inform the subject or others that their activities are under or may become the subject of an investigation and could enable the subjects to avoid detection or apprehension, to influence witnesses improperly, to destroy evidence, or to fabricate testimony.

Since an exemption is being claimed for subsection (d) of the Act (Access to Records) the rules require pursuant to subsection (f) (2) through (5) are inapplicable to these systems of records to the extent that these systems of records are exempted from subsection (d).

(12). (g). Since an exemption is being claimed for subsections (d) (Access to Records) and (f) (Agency Rules) this section is inapplicable, and is exempted for the reasons set forth for those subsections, to the extent that these systems of records are exempted from subsections (d) and (f).

(13). In addition, exemption is claimed for these systems of records from compliance with the following provisions of the Privacy Act of 1974 (5 U.S.C. 552a) pursuant to the provisions of 5 U.S.C. 552a(k)(1): Subsections (c)(3), (d), (e)(1), (e)(4) (G), (H) and (I) and (f) to the extent that the records contained in these systems are specifically authorized to be kept secret in the interests of national defense and foreign policy.

(c) The following system of records is exempted pursuant to the provisions of 5 U.S.C. 552a(j) (2) from subsection (c) (3) and (4), (d), (e) (1), (2) and (3), (e) (4) (G), (H) and (I), (e) (5) and (8), (f) and (g) of 5 U.S.C. 552a:

Criminal Division Witness Security File System of Records(JUSTICE/CRM–002).

These exemptions apply to the extent that information in this system is subject to exemption pursuant to 5 U.S.C. 552a(j)(2).

(d) The system of records listed under paragraph (c) of this section is exempted, for the reasons set forth, from the following provisions of 5 U.S.C. 552a:

(1). (c)(3) The release of the disclosure accounting for disclosures made pursuant to subsection (b) of the Act, including those permitted under the routine uses published for these systems of records, would permit the subject of an investigation of an actual or potential criminal violation, which may include those protected under the Witness Security Program, to determine whether he is the subject of a criminal investigation, to obtain valuable information concerning the nature of that investigation and the information obtained, or the identity of witnesses and informants and the nature of their reports, and would therefore present a serious impediment to law enforcement. In addition, disclosure of the accounting would amount to notice to the individual of the existence of a record; such notice requirement under subsection (f)(1) is specifically exempted for these systems of records. Moreover, disclosure of the disclosure accounting to an individual protected under the Witness Security Program could jeopardize the effectiveness and security of the Program by revealing the methods and techniques utilized in relocating witnesses and could therefore jeopardize the ability to obtain, and to protect the confidentiality of, information compiled for purposes of a criminal investigation.

(2). (c)(4) Since an exemption is being claimed for subsection (d) of the Act

(Access to Records) this section is inapplicable.

(3). (d) Access to the records contained in these systems would inform the subject of an investigation of an actual or potential criminal violation, which may include those protected under the Witness Security Program, of the existence of that investigation, of the nature and scope of the information and evidence obtained as to his activities, of the identity of witnesses and informants, or would provide information that could enable the subject to avoid detection or apprehension. These factors would present a serious impediment to effective law enforcement because they could prevent the successful completion of the investigation, endanger the physical safety of witnesses or informants, and lead to the improper influencing of witnesses, the destruction of evidence, or the fabrication of testimony. In addition, access to the records in these systems to an individual protected under the Witness Security Program could jeopardize the effectiveness and security of the Program by revealing the methods and techniques utilized in relocating witnesses and could therefore jeopardize the ability to obtain, and to protect the confidentiality of, information compiled for purposes of a criminal investigation.

(4). Exemption is claimed from subsection (e)(1) for the reasons stated in subsection (b)(4) of this section.

(5). (e)(2) In the course of preparing a Witness Security Program for an individual, much of the information is collected from the subject. However, the requirement that the information be collected to the greatest extent practicable from the subject individual would present a serious impediment to criminal law enforcement because the individual himself may be the subject of a criminal investigation or have been a participant in, or observer of, criminal activity. As a result, it is necessary to seek information from other sources. In addition, the failure to verify the information provided from the individual when necessary and to seek other information could jeopardize the confidentiality of the Witness Security Program and lead to the obtaining and maintenance of incorrect and uninvestigated information on criminal matters.

(6). (e)(3) The requirement that individuals supplying information be provided with a form stating the requirements of subsection (e)(3) would constitute a serious impediment to law enforcement in that it could compromise or reveal the identity of witnesses and informants protected under the Witness Security Program.

(7). (e)(4) (G) and (H). Since an exemption is being claimed for subsections (f) (Agency Rules) and (d) (Access to Records) of the Act these subsections are inapplicable.

(8). (e)(4)(I). The categories of sources of the records in these systems have been published in the FEDERAL REGISTER in broad generic terms in the belief that this is all that subsection (e)(4)(I) of the Act requires. In the event, however, that this subsection should be interpreted to require more detail as to the identity of sources of the records in the system, exemption from this provision is necessary in order to protect the confidentiality of the sources of criminal law, enforcement information and of witnesses and informants protected under the Witness Security Program.

(9). Exemption is claimed from subsections (e)(5) and (e)(8) for the reasons stated in subsection (b)(9) and (b)(10) of this section.

(10). Procedures for notice to an individual pursuant to subsection (f)(1) as to the existence of records contained in these systems pertaining to him would inform the subject of an investigation of an actual or potential criminal violation, which may include those protected under the Witness Security Program, of the existence of that investigation, of the nature and scope of the information and evidence obtained as to his activities, of the identity of witnesses and informants, or would provide information that could enable the subject to avoid detection or apprehension. These factors would present a serious impediment to effective law enforcement because they could prevent the successful conduct and/or completion of an investigation pending or future, endanger the physical safety of witnesses or informants, and lead to the improper influencing of witnesses,

the destruction of evidence, or the fabrication of testimony. In addition, notices as to the existence of records contained in these systems to an individual protected under the Witness Security Program could jeopardize the effectiveness and security of the Program by revealing the methods and techniques utilized in relocating witnesses and could therefore jeopardize the ability to obtain, and to protect the confidentiality of, information compiled for purposes of a criminal investigation.

Since an exemption is being claimed for subsection (d) of the Act (Access to Records) the rules required pursuant to subsection (f) (2) through (5) are inapplicable.

(11). (g) Since an exemption is being claimed for subsections (d) (Access to Records) and (f) (Agency Rules) this section is inapplicable and is exempted for the reasons set forth for those subsections.

(e) The following system of records is exempted pursuant to the provisions of 5 U.S.C. 552a(j)(2) from subsections (c) (3) and (4), (d), (e) (4) (G), (H) and (I), (f), and (g) of 5 U.S.C. 552a:

Organized Crime and Racketeering Section, Intelligence and Special Services Unit, Information Request System of Records (JUSTICE/CRM–014).

These exemptions apply to the extent that information in this system is subject to exemption pursuant to 5 U.S.C. 552a(j)(2).

(f) The system of records listed under paragraph (e) of this section is exempted for the reasons set forth, from the following provisions of 5 U.S.C. 552a:

(1). (c)(3). The release of the disclosure accounting for disclosures made pursuant to subsection (b) of the Act, including those permitted under the routine uses published for these systems of records, would permit the subject of an investigation of an actual or potential criminal violation to determine whether he is the subject of a criminal investigation and would therefore present a serious impediment to law enforcement. The records in these systems contain the names of the subjects of the files in question and the system is accessible by name of the person checking out the file and by name of the subject of the file. In addition, disclosure of the accounting would amount to notice to the individual of the existence of a record; such notice requirement under subsection (f)(1) is specifically exempted for these systems of records.

(2). (c)(4). Since an exemption is being claimed for subsection (d) of the Act (Access to Records) this section is inapplicable.

(3). (d). Access to the records contained in these systems would inform the subject of an investigation of an actual or potential criminal violation of the existence of that investigation. This would present a serious impediment to effective law enforcement because it could prevent the successful completion of the investigation, endanger the physical safety of witnesses or informants, and lead to the improper influencing of witnesses, the destruction of evidence, or the fabrication of testimony.

(4). Exemption is claimed from subsections (e)(4) (G), (H) and (I) for the reasons stated in subsections (b)(7) and (b)(8) of this section.

(5). (f). These systems may be accessed by the name of the person who is the subject of the file and who may also be the subject of a criminal investigation. Procedures for notice to an individual pursuant to subsection (f)(1) as to the existence of records pertaining to him, which may deal with an actual or potential criminal investigation or prosecution, must be exempted because such notice to an individual would be detrimental to the successful conduct and/or completion of the investigation or prosecution pending or future. In addition mere notice of the fact of an investigation could inform the subject or others that their activities are under or may become the subject of an investigation and could enable the subjects to avoid detection or apprehension, to influence witnesses improperly, to destroy evidence, or to fabricate testimony.

Since an exemption is being claimed for subsection (d) of the Act (Access to Records) the rules required pursuant to subsection (f) (2) through (5) are inapplicable.

(6). (g). Since an exemption is being claimed for subsections (d) (Access to

Records) and (f) (Agency Rules) of the Act this section is inapplicable and is exempted for the reasons set forth for those subsections.

(g) The following system of records is exempted pursuant to the provisions of 5 U.S.C. 552a(j)(2) from subsections (c)(4), (d), (e)(4) (G), (H) and (I), (f) and (g) of 5 U.S.C. 552a.

File of Names Checked to Determine If Those Individuals Have Been the Subject of an Electronic Surveillance System of Records (JUSTICE/CRM–003).

These exemptions apply to the extent that information in this system is subject to exemption pursuant to 5 U.S.C. 552a(j)(2).

(h) The system of records listed under paragraph (g) of this section is exempted, for the reasons set forth, from the following provisions of 5 U.S.C. 552a:

(1). (c)(4). Since an exemption is being claimed for subsection (d) of the Act (Access to Records) this section is inapplicable to the extent that this system of records is exempted from subsection (d).

(2). (d). The records contained in this system of records generally consist of information filed with the court in response to the request and made available to the requestor. To the extent that these records have been so filed, no exemption is sought from the provisions of this subsection. Occasionally, the records contain pertinent logs of intercepted communications and other investigative reports not filed with the court. These records must be exempted because access to such records could inform the subject of an investigation of an actual or potential criminal violation of the existence of that investigation and of the nature of the information and evidence obtained by the government. This would present a serious impediment to effective law enforcement because it could prevent the successful completion of the investigation, endanger the physical safety of witnesses or informants, and lead to the improper influencing of witnesses, the destruction of evidence, or the fabrication of testimony.

(3). Exemption is claimed from subsections (e)(4) (G), (H) and (I) for the reasons stated in subsections (b)(7) and (b)(8) of this section.

(4). (f). The records contained in this system of records generally consist of information filed with the court and made available to the requestor. To the extent that these records have been so filed, no exemption is sought from the provisions of this subsection. Occasionally, the records contain pertinent logs of intercepted communications and other investigative reports not filed with the court. These records must be exempted from a requirement of notification as to their existence because such notice to an individual would be detrimental to the successful conduct and/or completion of a criminal investigation or prosecution pending or future. In addition, mere notice of the existence of such logs or investigative reports could inform the subject or others that their activities are under or may become the subject of an investigation and could enable the subjects to avoid detection or apprehension, to influence witnesses improperly, to destroy evidence, or to fabricate testimony.

Since an exemption is being claimed for subsection (d) of the Act (Access to Records) the rules required pursuant to subsection (f) (2) through (5) are inapplicable to the extent that this system of records is exempted for subsection (d).

(6). (g). Since an exemption is being claimed for subsections (d) (Access to Records) and (f) (Agency Rules) this section is inapplicable, and is exempted for the reasons set forth for those subsections, to the extent that this system of records is exempted from subsections (d) and (f).

(i) The following systems of records are exempted pursuant to the provisions of 5 U.S.C. 552a(j)(2) from subsections (c) (3) and (4), (d), (e) (1), (2), and (3), (e)(4) (G), (H), and (I), (e) (5) and (8), (f) and (g) of 5 U.S.C. 552a:

(1) Information File on Individuals and Commercial Entities Known or Suspected of Being Involved in Fraudulent Activities System of Records (JUSTICE/CRM–006).

(2) The Stocks and Bonds Intelligence Control Card File System of Records (JUSTICE/CRM–021).

(3) Tax Disclosure Index File and Associated Records (JUSTICE/CRM–025).

These exemptions apply only to the extent that information in these systems is subject to exemption pursuant to 5 U.S.C. 552a(j)(2).

(j) The systems of records listed in paragraphs (i)(1), (i)(2), and (i)(3) of this section are exempted, for the reasons set forth, from the following provisions of 5 U.S.C. 552a:

(1)(c)(3) The release of the disclosure accounting for disclosures made pursuant to subsection (b) of the act, including those permitted under the routine uses published for these systems of records, would permit the subject of an investigation of an actual or potential criminal violation to determine whether he is the subject of a criminal investigation, to obtain valuable information concerning the nature of that investigation, and the information obtained, or the identity of witnesses and informants, and would therefore present a serious impediment to law enforcement. In addition, disclosure of the accounting would amount to notice to the individual of the existence of a record; such notice requirement under subsection (f)(1) is specifically exempted for this system of records.

(2)(c)(4) Since an exemption is being claimed for subsection (d) of the act (access to records), this section is inapplicable to the extent that these systems of records are exempted from subsection (d).

(3)(d) Access to the records contained in these systems would inform the subject of an investigation of an actual or potential criminal violation of the existence of that investigation, of the nature and scope of the information and evidence obtained as to his activities, of the identity of witnesses and informants, or would provide information that could enable the subject to avoid detection or apprehension. These factors would present a serious impediment to effective law enforcement because they could prevent the successful completion of the investigation, endanger the physical safety of witnesses or informants, and lead to the improper influencing of witnesses, the destruction of evidence, or the fabrication of testimony.

(4) Exemption is claimed from subsections (e) (1), (2), and (3), (e)(4) (G), (H), and (I), (e)(5) and (e)(8) for the reasons stated in subsections (b)(4), (b)(5), (b)(6), (b)(7), (b)(8), (b)(9), and (b)(10) of this section.

(5)(f) Procedures for notice to an individual pursuant to subsection (f)(1) as to the existence of records pertaining to him dealing with an actual or potential criminal investigation or prosecution must be exempted because such notice to an individual would be detrimental to the successful conduct and/or completion of an investigation or prosecution pending or future. In addition, mere notice of the fact of an investigation could inform the subject or others that their activities are under or may become the subject of an investigation and could enable the subjects to avoid detection or apprehension, to influence witnesses improperly, to destroy evidence, or to fabricate testimony. Since an exemption is being claimed for subsection (d) of the act (access to records), the rules required pursuant to subsection (f) (2) through (5) are inapplicable to these systems of records.

(6)(g) Since an exemption is being claimed for subsections (d) (access to records) and (f) (Agency rules), this section is inapplicable and is exempted for the reasons set forth for those subsections.

(k) The following system of records is exempted pursuant to the provisions of 5 U.S.C. 552a(j)(2) from subsections (c) (3) and (4), (d), (e) (1), (2) and (3), (e)(4) (G), (H) and (I), (e) (5) and (8), (f) and (g) of 5 U.S.C. 552a; in addition, the following systems of records are exempted pursuant to the provisions of 5 U.S.C. 552a(k)(1) from subsections (c) (3), (d), (e)(1), (e)(4) (G), (H) and (I) and (f) of 5 U.S.C. 552a:

Organized Crime and Racketeering Section, Criminal Division, General Index File and Associated Records System of Records (JUSTICE/CRM–012).

These exemptions apply to the extent that information in this system is subject to exemption pursuant to 5 U.S.C. 552a(j)(2) and (k)(1).

(l) The system of records listed under paragraph (m)[1] of this section is exempted, for the reasons set forth, from the following provisions of 5 U.S.C. 552a:

(1). Exemption is claimed from subsections (c) (3) and (4) and (d) for the reasons stated in subsections (j)(1), (j)(2) and (j)(3) of this section.

(2). (e)(1). The notice for this system of records published in the FEDERAL REGISTER sets forth the basic statutory or related authority for maintenance of this system. However, in the course of criminal investigations, cases, and matters, the Organized Crime and Racketeering Section will occasionally obtain information concerning actual or potential violations of law that are not strictly within its statutory or other authority, or may compile information in the course of an investigation which may not be relevant to a specific prosecution. In the interests of effective law enforcement, it is necessary to retain such information in this system of records since it can aid in establishing patterns of criminal activity and can provide valuable leads for federal and other law enforcement agencies.

(3). Exemption is claimed from subsections (e) (2) and (3), (e)(4) (G), (H) and (I), (e) (5) and (8), (f) and (g) for the reasons stated in subsections (b)(5), (b)(6), (b)(7), (b)(8), (b)(9), (b)(10), (b)(11) and (b)(12) of this section.

(4). In addition, exemption is claimed for this system of records from compliance with the following provisions of the Privacy Act of 1974 (5 U.S.C. 552a) pursuant to the provisions of 5 U.S.C. 552a(k)(1): Subsections (c)(3), (d), (e)(1), (e)(4) (G), (H) and (I) and (f) to the extent that the records contained in this system are specifically authorized to be kept secret in the interests of national defense and foreign policy.

(m) The following system of records is exempted pursuant to the provisions of 5 U.S.C. 552a(j)(2) from subsections (c) (3) and (4), (d), (e) (2) and (3), (e) (4) (G), (H) and (I), (e) (8), (f) and (g) of 5 U.S.C. 552a:

Requests to the Attorney General For Approval of Applications to Federal Judges For Electronic Interceptions System of Records (JUSTICE/CRM–019).

These exemptions apply only to the extent that information in this system is subject to exemption pursuant to 5 U.S.C. 552a(j)(2).

(n) The system of records listed in paragraph (m) of this section is exempted for the reasons set forth, from the following provisions of 5 U.S.C. 552a:

(1). (c)(3). The release of the disclosure accounting for disclosures made pursuant to subsection (b) of the Act, including those permitted under the routine uses published for these systems of records, would permit the subject of an electronic interception to obtain valuable information concerning the interception, including information as to whether he is the subject of a criminal investigation, by means other than those provided for by statute. Such information could interfere with the successful conduct and/or completion of a criminal investigation, and would therefore present a serious impediment to law enforcement. In addition, disclosure of the accounting would amount to notice to the individual of the existence of a record; such notice requirement under subsection (f)(1) is specifically exempted for these systems of records.

(2). (c)(4). Since an exemption is being claimed for subsection (d) of the Act (Access to Records) this section is inapplicable.

(3). (d). Access to the records contained in these systems would inform the subject of an electronic interception of the existence of such surveillance including information as to whether he is the subject of a criminal investigation by means other than those provided for by statute. This could interfere with the successful conduct and/or completion of a criminal investigation and therefore present a serious impediment to law enforcement.

(4). (e)(2). In the context of an electronic interception, the requirement that information be collected to the greatest extent practicable from the subject individual would present a serious impediment to law enforcement because the subject of the investigation

[1] Paragraph (m) was redesignated as paragraph (k) at 44 FR 54046, Sept. 18, 1979.

or prosecution would be placed on notice as to the existence of the investigation and this would therefore destroy the efficacy of the interception.

(5). (e)(3). The requirement that individuals supplying information be provided with a form stating the requirements of subsection (e)(3) would constitute a serious impediment to law enforcement in that it could compromise the existence of a confidential electronic interception or reveal the identity of witnesses or confidential informants.

(6). (e)(4) (G) and (H). Since an exemption is being claimed for subsections (f) (Agency Rules) and (d) (Access to Records) of the Act these subsections are inapplicable.

(7). Exemption is claimed from subsections (e)(4)(I) and (e)(8) for the reasons stated in subsections (b)(8) and (b)(10) of this section.

(8). (f). Procedures for notice to an individual pursuant to subsection (f)(1) as to the existence of records pertaining to him dealing with an electronic interception other than pursuant to statute must be exempted because such notice to an individual would be detrimental to the successful conduct and/or completion of an investigation pending or future. In addition, mere notice of the fact of an electronic interception could inform the subject or others that their activities are under or may become the subject of an investigation and could enable the subjects to avoid detection or apprehension, to influence witnesses improperly, to destroy evidence, or to fabricate testimony.

Since an exemption is being claimed for subsection (d) of the Act (Access to Records) the rules required pursuant to subsection (f)(2) through (5) are inapplicable to these systems of records to the extent that these systems of records are exempted from subsection (d).

(9). (g). Since an exemption is being claimed for subsection (d) (Access to Records) and (f) (Agency Rules) this section is inapplicable, and is exempted for the reasons set forth for those subsections, to the extent that these systems of records are exempted from subsection (d) and (f).

(o) The following system of records is exempted pursuant to the provisions of 5 U.S.C. 552a(j)(2) from subsections (c)(3) and (4), (d), (e)(2) and (3), (e)(4)(G), (H), and (I), (e)(8), (f) and (g) of 5 U.S.C. 552a; in addition the following system of records is exempted pursuant to the provisions of 5 U.S.C. 552a(k)(1) and (k)(2) from subsections (c)(3), (d), (e)(4)(G), (H) and (I), and (f) of 5 U.S.C. 552a:

Witness Immunity Records System of Records (JUSTICE/CRM–022).

These exemptions apply only to the extent that information in this system is subject to exemption pursuant to 5 U.S.C. 552a (j)(2) and (k)(1) and (k)(2).

(p) The system of records listed under paragraph (q)[2] of this section is exempted, for the reasons set forth, from the following provisions of 5 U.S.C. 552a:

(1). (c)(3). Release of the accounting of disclosures made pursuant to subsection (b) of the Act, including those permitted under the routine uses published for this system of records, (a) as to a witness for whom immunity has been proposed, would inform the individual of the existence of the proposed immunity prematurely, thus creating a serious impediment to effective law enforcement in that the witness could flee, destroy evidence, or fabricate testimony; and (b) as to a witness to whom immunity has been granted, or for whom it has been denied, would reveal the nature and scope of the activities, if any, of the witness known to the government, which would also create a serious impediment to effective law enforcement.

(2). (c)(4). Since an exemption is being claimed for subsection (d) of the Act (Access to Records) this section is inapplicable to the extent that this system of records is exempted from subsection (d).

(3). (d). Access to the records contained in this system (a) as to a witness for whom immunity has been proposed, would inform the individual of the existence of the proposed immunity prematurely, thus presenting a serious impediment to effective law enforcement in that the witness could flee, destroy evidence, or fabricate testimony;

[2] Paragraph (q) was redesignated as paragraph (o) at 44 FR 54046, Sept. 18, 1979.

and (b) as to a witness to whom immunity has been granted, or for whom it has been denied, would reveal the nature and scope of the activities, if any, of the witness known to the government, which would also create a serious impediment to effective law enforcement.

(4). (e)(2). In a witness immunity request matter, the requirement that information be collected to the greatest extent practicable from the subject individual would present a serious impediment to law enforcement because the subject of the immunity request and often the subject of the underlying investigation or prosecution would be placed on notice as to the existence of the investigation and would therefore be able to avoid detection or apprehension, to influence witnesses improperly, to destroy evidence, or to fabricate testimony.

(5). Exemption is claimed from subsections (e)(3), (e)(4)(G), (H) and (I), and (e)(8) for the reasons stated in subsections (b)(6), (b)(7), (b)(8) and (b)(10) of this section.

(6). (f). Procedures for notice to an individual pursuant to subsection (f)(1) as to the existence of records pertaining to him (a) as to a witness for whom immunity has been proposed, would inform the individual of the existence of the proposed immunity prematurely, thus presenting a serious impediment to effective law enforcement in that the witness could flee, destroy evidence, or fabricate testimony; and (b) as to a witness to whom immunity has been granted, or for whom it has been denied, would reveal the nature and scope of the activity, if any, of the witness known to the government, which would also create a serious impediment to effective law enforcement.

Since an exemption is being claimed for subsection (d) of the Act (Access to Records) the rules required pursuant to subsection (f)(2) through (5) are inapplicable to this system of records to the extent that this system of records is exempted from subsection (d).

(7). (g). Since an exemption is being claimed for subsections (d) (Access to Records) and (f) (Agency Rules) this section is inapplicable, and is exempted for the reasons set forth for those subsections, to the extent that this system of records is exempted for subsections (d) and (f).

(8). In addition, exemption is claimed for this system of records from compliance with the following provisions of the Privacy Act of 1974 (5 U.S.C. 552a) pursuant to the provisions of 5 U.S.C. 552a(k)(1): subsections (c)(3), (d), (e)(1), (e)(4) (G), (H) and (I) and (f) to the extent that the records contained in this system are specifically authorized to be kept secret in the interests of national defense and foreign policy.

(q) The following system of records is exempt from 5 U.S.C. 552a(c) (3) and (4), (d), (e) (1), (2) and (3), (e)(4) (G), (H) and (I), (e) (5) and (8), (f), and (g):

(1) Freedom of Information/Privacy Act Records (JUSTICE/CRM–024)

These exemptions apply to the extent that information in this system is subject to exemption pursuant to 5 U.S.C. 552a(j)(2), (k)(1) and (k)(2).

(r) Because this system contains Department of Justice civil and criminal law enforcement, investigatory records, it is exempted for the reasons set forth from the following provisions of 5 U.S.C. 552a:

(1)(c)(3). The release of the disclosure accounting would present a serious impediment to law enforcement by permitting the subject of an investigation of an actual or potential criminal, civil, or regulatory violation to determine whether he is the subject of investigation, or to obtain valuable information concerning the nature of that investigation and the information obtained, or to identify witnesses and informants.

(2)(c)(4). Since an exemption is being claimed for subsection (d) of the Act (Access to Records), this subsection is inapplicable to the extent that this system of records is exempted from subsection (d).

(3)(d). Access to records contained in this system would enable the subject of an investigation of an actual or potential criminal or civil case or regulatory violation to determine whether he or she is the subject of investigation, to obtain valuable information concerning the nature and scope of the investigation, and information or evidence obtained as to his/her activities, to identify witnesses and informants, or to avoid detection or apprehension.

Such results could prevent the successful completion of the investigation, endanger the physical safety of witnesses or informants, lead to the improper influencing of witnesses, the destruction of evidence, or the fabrication of testimony, and thereby present a serious impediment to effective law enforcement. Amendment of the records would interfere with ongoing criminal law enforcement proceedings and impose an impossible administrative burden by requiring criminal investigations to be continuously reinvestigated.

(4)(e)(1). In the course of criminal or other law enforcement investigations, cases, and matters, the Criminal Division will occasionally obtain information concerning actual or potential violations of law that are not strictly within its statutory or other authority, or it may compile information in the course of an investigation which may not be relevant to a specific prosecution. In the interests of effective law enforcement, it is necessary to retain such information since it can aid in establishing patterns of criminal activity and can provide valuable leads for Federal and other law enforcement agencies.

(5)(e)(2). To collect information to the greatest extent practicable from the subject individual of a criminal investigation or prosecution would present a serious impediment to law enforcement. The nature of criminal and other investigative activities is such that vital information about an individual can only be obtained from other persons who are familiar with such individual and his/her activities. In such investigations it is not feasible to rely upon information furnished by the individual concerning his own activities.

(6) (e)(3). To provide individuals supplying information with a form stating the requirements of subsection (e)(3) would constitute a serious impediment to law enforcement in that it could compromise the existence of a confidential investigation or reveal the identity of witnesses or confidential informants.

(7)(e)(4) (G) and (H). These subsections are inapplicable to the extent that this system is exempt from the access provisions of subsection (d) and the rules provisions of subsection (f).

(8)(e)(4)(I). The categories of sources of the records in this system have been published in the FEDERAL REGISTER in broad generic terms in the belief that this is all that subsection (e)(4)(I) of the Act requires. In the event, however, that this subsection should be interpreted to require more detail as to the identity of sources of the records in this system, exemption from this provision is necessary to protect the confidentiality of the sources of criminal and other law enforcement information. Such exemption is further necessary to protect the privacy and physical safety of witnesses and informants.

(9) (e)(5). In the collection of information for criminal law enforcement purposes it is impossible to determine in advance what information is accurate, relevant, timely, and complete. With the passage of time, seemingly irrelevant or untimely information may acquire new significance as further investigation brings new details to light and the accuracy of such information can often only be determined in a court of law. The restrictions of subsection (e)(5) would inhibit the ability of trained investigators, intelligence analysts, and government attorneys in exercising their judgment in reporting on information and investigations and impede the development of criminal or other intelligence necessary for effective law enforcement.

(10)(e)(8). The individual notice requirements of subsection (e)(8) could present a serious impediment to law enforcement as this could interfere with the ability to issue warrants or subpoenas and could reveal investigative techniques, procedures, or evidence.

(11)(f). This subsection is inapplicable to the extent that this system is exempt from the access provisions of subsection (d).

(12)(g). Because some of the records in this system contain information which was compiled for law enforcement purposes and have been exempted from the access provisions of subsection (d), subsection (g) is inapplicable.

(s) The following system of records is exempted from 5 U.S.C. 552a(d).

Office of Special Investigations Displaced Persons Listings (JUSTICE/CRM–027).

This exemption applies to the extent that the records in this system are subject to exemption pursuant to 5 U.S.C. 552a(k)(2).

(t) Exemption from subsection (d) is justified for the following reasons:

(1) Access to records contained in this system could inform the subject of the identity of witnesses or informants. The release of such information could present a serious impediment to effective law enforcement by endangering the physical safety of witnesses or informants; by leading to the improper influencing of witnesses, the destruction of evidence, or the fabrication of testimony; or by otherwise preventing the successful completion of an investigation.

(u) The following system of records is exempted pursuant to the provisions of 5 U.S.C. 552a(j) and/or (k) from subsections (c)(3) and (4); (d)(1), (2), (3), and (4); (e)(1), (2), (3), (5), and (8); and (g) of 5 U.S.C. 552a: Organized Crime Drug Enforcement Task Force Fusion Center System (JUSTICE/CRM–028). These exemptions apply only to the extent that information in this system is subject to exemption pursuant to 5 U.S.C. 552a(j) and/or (k).

(v) Exemptions from the particular subsections are justified for the following reasons:

(1) From subsection (c)(3) because to provide the subject with an accounting of disclosures of records in this system could inform that individual of the existence, nature, or scope of an actual or potential law enforcement or counterintelligence investigation by the Organized Crime Drug Enforcement Task Force Fusion Center or the recipient agency, and could permit that individual to take measures to avoid detection or apprehension, to learn the identity of witnesses and informants, or to destroy evidence, and would therefore present a serious impediment to law enforcement or counterintelligence efforts. In addition, disclosure of the accounting would amount to notice to the individual of the existence of a record. Moreover, release of an accounting may reveal information that is properly classified pursuant to Executive Order 12958 (or successor or prior Executive Order) or a statute and could compromise the national defense or foreign policy.

(2) From subsection (c)(4) because this subsection is inapplicable to the extent that an exemption is being claimed for subsection (d)(1), (2), (3), and (4).

(3) From subsection (d)(1) because disclosure of records in the system could alert the subject of an actual or potential criminal, civil, or regulatory violation of the existence of that investigation, of the nature and scope of the information and evidence obtained as to his activities, of the identity of confidential witnesses and informants, of the investigative interest of Organized Crime Drug Enforcement Task Force Fusion Center and other intelligence or law enforcement agencies (including those responsible for civil proceedings related to laws against drug trafficking or related financial crimes); lead to the destruction of evidence, improper influencing of witnesses, fabrication of testimony, and/or flight of the subject; reveal the details of a sensitive investigative or intelligence technique, or the identity of a confidential source; or otherwise impede, compromise, or interfere with investigative efforts and other related law enforcement and/or intelligence activities. In addition, disclosure could invade the privacy of third parties and/or endanger the life, health, and physical safety of law enforcement personnel, confidential informants, witnesses, and potential crime victims. Access to records could also result in the release of information properly classified pursuant to Executive Order 12958 (or successor or prior Executive Order) or by statute, thereby compromising the national defense or foreign policy.

(4) From subsection (d)(2) because amendment of the records thought to be incorrect, irrelevant, or untimely would also interfere with ongoing investigations, criminal or civil law enforcement proceedings, and other law enforcement activities and impose an impossible administrative burden by requiring investigations, analyses, and reports to be continuously reinvestigated and revised.

(5) From subsections (d)(3) and (4) because these subsections are inapplicable to the extent exemption is claimed from (d)(1) and (2).

(6) From subsection (e)(1) because, in the course of its acquisition, collation, and analysis of information under the statutory authority granted to it, the Organized Crime Drug Enforcement Task Force Fusion Center will occasionally obtain information concerning actual or potential violations of law that are not strictly within its statutory or other authority or may compile information in the course of an investigation which may not be relevant to a specific prosecution. It is impossible to determine in advance what information collected during an investigation will be important or crucial to the apprehension of fugitives. In the interests of effective law enforcement, it is necessary to retain such information in this system of records because it can aid in establishing patterns of criminal activity and can provide valuable leads for federal and other law enforcement agencies. This consideration applies equally to information acquired from, or collated or analyzed for, both law enforcement agencies and agencies of the U.S. foreign intelligence community and military community.

(7) From subsection (e)(2) because in a criminal, civil, or regulatory investigation, prosecution, or proceeding, the requirement that information be collected to the greatest extent practicable from the subject individual would present a serious impediment to law enforcement because the subject of the investigation, prosecution, or proceeding would be placed on notice as to the existence and nature of the investigation, prosecution, and proceeding and would therefore be able to avoid detection or apprehension, to influence witnesses improperly, to destroy evidence, or to fabricate testimony. Moreover, thorough and effective investigation and prosecution may require seeking information from a number of different sources.

(8) From subsection (e)(3) (to the extent applicable) because the requirement that individuals supplying information be provided a form stating the requirements of subsection (e)(3) would constitute a serious impediment to law enforcement in that it could compromise the existence of a confidential investigation or reveal the identity of witnesses or confidential informants and endanger their lives, health, and physical safety. The individual could seriously interfere with undercover investigative techniques and could take appropriate steps to evade the investigation or flee a specific area.

(9) From subsection (e)(5) because the acquisition, collation, and analysis of information for law enforcement purposes from various agencies does not permit a determination in advance or a prediction of what information will be matched with other information and thus whether it is accurate, relevant, timely and complete. With the passage of time, seemingly irrelevant or untimely information may acquire new significance as further investigation brings new details to light and the accuracy of such information can often only be determined in a court of law. The restrictions imposed by subsection (e)(5) would restrict the ability of trained investigators, intelligence analysts, and government attorneys to exercise their judgment in collating and analyzing information and would impede the development of criminal or other intelligence necessary for effective law enforcement.

(10) From subsection (e)(8) because the individual notice requirements of subsection (e)(8) could present a serious impediment to law enforcement by revealing investigative techniques, procedures, evidence, or interest and interfering with the ability to issue warrants or subpoenas, and could give persons sufficient warning to evade investigative efforts.

(11) From subsection (g) because this subsection is inapplicable to the extent that the system is exempt from other specific subsections of the Privacy Act.

(12) In addition, exemption is claimed for this system of records from compliance with the following provisions of 5 U.S.C. 552a pursuant to the provisions of 5 U.S.C. 552a(k): subsections (c)(3), (d), (e)(1), to the extent that the records contained in this system are

specifically authorized to be kept secret in the interests of national defense and foreign policy.

[Order No. 645–76, 41 FR 12640, Mar. 26, 1976, as amended by Order No. 659–76, 41 FR 32423, Aug. 3, 1976; Order No. 11–78, 43 FR 38386, Aug. 28, 1978; Order No. 30–79, 44 FR 54046, Sept. 18, 1979; Order Nos. 6–86, 7–86, 51 FR 15475, 15477, Apr. 24, 1986; Order No. 018–2004, 69 FR 72114, Dec. 13, 2004; Order No. 015–2006, 71 FR 58278, Oct. 3, 2006]

§ 16.92 Exemption of Environment and Natural Resources Division Systems—limited access.

(a)(1) The following system of records is exempted pursuant to 5 U.S.C. 552a(j)(2) from subsections (c)(3) and (4), (d), (e)(1), (e)(2), (e)(3), (e)(5), (e)(8), (f) and (g); in addition, the following systems of records are exempted pursuant to 5 U.S.C. 552a(k)(1) and (k)(2) from subsections (c)(3), (d), and (e)(1):

(i) Environment and Natural Resources Division Case and Related Files System, JUSTICE/ENRD–003.

(ii) [Reserved]

(2) These exemptions apply only to the extent that information in this system relates to the investigation, prosecution or defense of actual or potential criminal or civil litigation, or which has been properly classified in the interest of national defense and foreign policy, and therefore is subject to exemption pursuant to 5 U.S.C. 552a(j)(2), (k)(1) and (k)(2). To the extent that information in a record pertaining to an individual does not relate to national defense or foreign policy, official Federal investigations, and/or law enforcement matters, the exemption does not apply. In addition, where compliance would not appear to interfere with or adversely affect the overall law or regulatory enforcement process, the applicable exemption may be waived by the Environment and Natural Resources Division.

(b) Only that information that relates to the investigation, prosecution or defense of actual or potential criminal or civil litigation, or which has been properly classified in the interest of national defense and foreign policy is exempted for the reasons set forth from the following subsections:

(1) *Subsection (c)(3).* Subsection (c)(3) requires an agency to provide an accounting of disclosures of records concerning an individual. To provide the subject of a criminal or civil matter or case under investigation with an accounting of disclosures of records would inform that individual (and others to whom the subject might disclose the records) of the existence, nature, or scope of that investigation and thereby seriously impede law enforcement efforts by permitting the record subject and others to avoid criminal penalties and civil remedies.

(2) *Subsections (c)(4) (requiring an agency to inform individuals about any corrections made to a record that has been disclosed) and (g) (providing for civil remedies when an agency fails to comply with these provisions).* These provisions are inapplicable to the extent that this system of records is exempted from subsection (d).

(3) *Subsection (d).* Subsection (d) requires an agency to allow individuals to gain access to a record about him or herself; to dispute the accuracy, relevance, timeliness or completeness of such records; and to have an opportunity to amend his or her record or seek judicial review. To the extent that information contained in this system has been properly classified, relates to the investigation and/or prosecution of grand jury, civil fraud, and other law enforcement matters, disclosure could compromise matters which should be kept secret in the interest of national security or foreign policy; compromise confidential investigations or proceedings; impede affirmative enforcement actions based upon alleged violations of regulations or of civil or criminal laws; reveal the identity of confidential sources; and result in unwarranted invasions of the privacy of others. Amendment of the records would interfere with ongoing criminal law enforcement proceedings and impose an impossible administrative burden by requiring criminal investigations to be continuously reinvestigated.

(4) *Subsection (e)(1).* Subsection (e)(1) requires an agency to maintain in its records only such information about an individual that is relevant and necessary to accomplish the agency's purpose. In the course of criminal or civil investigations, cases, or other matters,

the Environment and Natural Resources Division may obtain information concerning the actual or potential violation of laws which are not strictly within its statutory authority. In the interest of effective law enforcement, it is necessary to retain such information since it may establish patterns of criminal activity or avoidance of other civil obligations and provide leads for Federal and other law enforcement agencies.

(5) *Subsection (e)(2).* Subsection (e)(2) requires an agency to collect information to the greatest extent practicable from the subject individual when the information may result in adverse determinations about an individual's rights, benefits and privileges under Federal programs. To collect information from the subject of a criminal investigation or prosecution would present a serious impediment to law enforcement in that the subject (and others with whom the subject might be in contact) would be informed of the existence of the investigation and would therefore be able to avoid detection or apprehension, to influence witnesses improperly, to destroy evidence, or to fabricate testimony.

(6) *Subsection (e)(3).* Subsection (e)(3) requires an agency to inform each individual whom it asks to supply information, on a form that can be retained by the individual, the authority which authorizes the solicitation, the principal purpose for the information, the routine uses of the information, and the effects on the individual of not providing the requested information. To comply with this requirement during the course of a criminal investigation or prosecution could jeopardize the investigation by disclosing the existence of a confidential investigation, revealing the identity of witnesses or confidential informants, or impeding the information gathering process.

(7) *Subsection (e)(5).* Subsection (e)(5) requires an agency to maintain records with such accuracy, relevance, timeliness, and completeness as is reasonably necessary to assure fairness to the individual. In compiling information for criminal law enforcement purposes, the accuracy, completeness, timeliness and relevancy of the information obtained cannot always be immediately determined. As new details of an investigation come to light, seemingly irrelevant or untimely information may acquire new significance and the accuracy of such information can often only be determined in a court of law. Compliance with this requirement would therefore restrict the ability of government attorneys in exercising their judgment in developing information necessary for effective law enforcement.

(8) *Subsection (e)(8).* Subsection (e)(8) requires agencies to make reasonable efforts to serve notice on an individual when any record on the individual is made available to any person under compulsory legal process. To serve notice would give persons sufficient warning to evade law enforcement efforts.

(9) *Subsections (f) and (g).* Subsection (f) requires an agency to establish procedures to allow an individual to have access to information about him or herself and to contest information kept by an agency about him or herself. Subsection (g) provides for civil remedies against agencies who fail to comply with the Privacy Act requirements. These provisions are inapplicable to the extent that this system is exempt from the access and amendment provisions of subsection (d).

(c) The following system of records is exempt from 5 U.S.C. 552a (c)(3) and (d):

(1) Freedom of Information/Privacy Act Records System. (Justice/LDN–005).

These exemptions apply only to the extent that information in this system is subject to exemption pursuant to 5 U.S.C. 552a(k)(2).

(d) Exemptions from the particular subsections are justified for the following reasons:

(1) From subsection (c) (3) because that portion of the Freedom of Information/Privacy Act Records System that consists of investigatory materials compiled for law enforcement purposes is being exempted from access and contest; the provision for disclosure of accounting is not applicable.

(2) From subsection (d) because of the need to safeguard the identity of confidential informants and avoid interference with ongoing investigations or

law enforcement activities by preventing premature disclosure of information relating to those efforts.

[Order No. 688–77, 42 FR 10000, Feb. 18, 1977, as amended by Order No. 207–2000, 65 FR 75158, Dec. 1, 2000]

§ 16.93 Exemption of Tax Division Systems—limited access.

(a) The following systems of records are exempted pursuant to the provisions of 5 U.S.C. 552a (j)(2) from subsections (c)(3), (c)(4), (d)(1), (d)(2), (d)(3), (d)(4), (e)(1), (e)(2), (e)(3), (e)(4)(G), (e)(4)(H), (e)(4)(I), (e)(5), (e)(8), (f) and (g) of 5 U.S.C. 552a:

(1) Tax Division Central Classification Cards, Index Docket Cards, and Associated Records—Criminal Tax Cases (JUSTICE/TAX–001)—Limited Access.

(2) These exemptions apply to the extent that information in these systems is subject to exemption pursuant to 5 U.S.C. 552a(j)(2).

(b) The system of records listed under paragraph (a)(1) of this section is exempted for the reasons set forth below, from the following provisions of 5 U.S.C. 552a:

(1)(c)(3). The release of the disclosure accounting, for disclosures made pursuant to subsection (b) of the Act, including those permitted under the routine uses published for those systems of records, would enable the subject of an investigation of an actual or potential criminal tax case to determine whether he or she is the subject of investigation, to obtain valuable information concerning the nature of that investigation and the information obtained, and to determine the identity of witnesses or informants. Such access to investigative information would, accordingly, present a serious impediment to law enforcement. In addition, disclosure of the accounting would constitute notice to the individual of the existence of a record even though such notice requirement under subsection (f)(1) is specifically exempted for these systems of records.

(2)(c)(4). Since an exemption is being claimed for subsection (d) of the Act (Access to Records) this subsection is inapplicable to the extent that these systems of records are exempted from subsection (d).

(3) (d)(1); (d)(2); (d)(3); (d)(4). Access to the records contained in these systems would inform the subject of an actual or potential criminal tax investigation of the existence of that investigation, of the nature and scope of the information and evidence obtained as to his or her activities, and of the identity of witnesses or informants. Such access would, accordingly, provide information that could enable the subject to avoid detection, apprehension and prosecution. This result, therefore, would constitute a serious impediment to effective law enforcement not only because it would prevent the successful completion of the investigation but also because it could endanger the physical safety of witnesses or informants, lead to the improper influencing of witnesses, the destruction of evidence, or the fabrication of testimony.

(4)(e)(1). The notices for these systems of records published in the FEDERAL REGISTER, set forth the basic statutory or related authority for maintenance of these systems. However, in the course of criminal tax and related law enforcement investigations, cases, and matters, the Tax Division will occasionally obtain information concerning actual or potential violations of law that may not be technically within its statutory or other authority or may compile information in the course of an investigation which may not be relevant to a specific prosecution. In the interests of effective law enforcement, it is necessary to retain some or all of such information in these systems of records since it can aid in establishing patterns of criminal activity and can provide valuable leads for Federal and other law enforcement agencies.

(5)(e)(2). In a criminal tax investigation or prosecution, the requirement that information be collected to the greatest extent practicable from the subject individual would present a serious impediment to law enforcement because the subject of the investigation or prosecution would be placed on notice as to the existence of the investigation and would therefore be able to avoid detection or apprehension, influence witnesses improperly, destroy evidence, or fabricate testimony.

(6)(e)(3). The requirement that individuals supplying information be provided with a form stating the requirements of subsection (e)(3) would constitute a serious impediment to law enforcement in that it could compromise the existence of a confidential investigation or reveal the identity of witnesses or confidential informants.

(7)(e)(4) (G) and (H). Since an exemption is being claimed for subsections (f) (Agency Rules) and (d) (Access to Records) of the Act these subsections are inapplicable to the extent that these systems of records are exempted from subsection (f) and (d).

(8)(e)(4)(I). The categories of sources of the records in the systems have been published in the FEDERAL REGISTER in broad generic terms in the belief that this is all that subsection (e)(4)(I) of the Act requires. In the event, however, that this subsection should be interpreted to require more detail as to the identity of sources of the records in these systems, exemption from this provision is necessary in order to protect the confidentiality of the sources of criminal tax and related law enforcement information. Such exemption is further necessary to protect the privacy and physical safety of witnesses and informants.

(9)(e)(5). In the collection of information for criminal tax enforcement purposes it is impossible to determine in advance what information is accurate, relevant, timely, and complete. With the passage of time, seemingly irrelevant or untimely information may acquire new significance as further investigation brings new details to light. Furthermore, the accuracy of such information can often only be determined in a court of law. The restrictions of subsection (e)(5) would restrict the ability of government attorneys in exercising their judgment in reporting on information and investigations and impede the development of criminal tax information and related data necessary for effective law enforcement.

(10)(e)(8). The individual notice requirements of subsection (e)(8) could present a serious impediment to law enforcement as this could interfere with the ability to issue warrants or subpoenas and could reveal investigative techniques, procedures, or evidence.

(11)(f). Procedures for notice to an individual pursuant to subsection (f)(1) as to the existence of records pertaining to him dealing with an actual or potential criminal tax, civil tax, or regulatory investigation or prosecution must be exempted because such notice to an individual would be detrimental to the successful conduct and/or completion or an investigation or prosecution pending or future. In addition, mere notice of the fact of an investigation could inform the subject or others that their activities are under or may become the subject of an investigation and could enable the subjects to avoid detection or apprehension, to influence witnesses improperly, to destroy evidence, or to fabricate testimony.

Since an exemption is being claimed for subsection (d) of the Act (Access to Records) the rules required pursuant to subsection (f) (2) through (5) are inapplicable to these systems of records to the extent that these systems of records are exempted from subsection (d).

(12)(g). Since an exemption is being claimed for subsections (d) (Access to Records) and (f) (Agency Rules) this section is inapplicable, and is exempted for the reasons set forth for those subsections, to the extent that these systems of records are exempted from subsections (d) and (f).

(c) The following system of records is exempted pursuant to the provisions of 5 U.S.C. 552a(k)(2) from subsections (c)(3), (d)(1), (d)(2), (d)(3), (d)(4), (e)(1), (e)(4)(G, (e)(4)(H, (e)(4)(I) and (f) of 5 U.S.C. 552a:

(1) Tax Division Central Classification Cards, Index Docket Cards, and Associated Records—Civil Tax Cases (JUSTICE/TAX–002)—Limited Access.

These exemptions apply to the extent that information in this system is subject to exemption pursuant to 5 U.S.C. 552a(k)(2).

(d) The system of records listed under paragraph (c)(1) is exempted for the reasons set forth below, from the following provisions of 5 U.S.C. 552a:

(1)(c)(3). The release of the disclosure accounting, for disclosures made pursuant to subsection (b) of the Act, including those permitted under the routine

uses published for this system of records, would enable the subject of an investigation of an actual or potential civil tax case to determine whether he or she is the subject of investigation, to obtain valuable information concerning the nature of that investigation and the information obtained, and to determine the identity of witnesses or informants. Such access to investigative information would, accordingly, present a serious impediment to law enforcement. In addition, disclosure of the accounting would constitute notice to the individual of the existence of a record even though such notice requirement under subsection (f)(1) is specifically exempted for this system of records.

(2) (d)(1); (d)(2); (d)(3); (d)(4). Access to the records contained in this system would inform the subject of an actual or potential civil tax investigation of the existence of that investigation, of the nature and scope of the information and evidence obtained as to his or her activities and of the identity of witnesses or informants. Such access would, accordingly, provide information that could enable the subject to avoid detection. This result, therefore, would constitute a serious impediment to effective law enforcement not only because it would prevent the successful completion of the investigation but also because it could endanger the physical safety of witnesses or informants, lead to the improper influencing of witnesses, the destruction of evidence, or the fabrication of testimony.

(3)(e)(1). The notices for this system of records published in the FEDERAL REGISTER set forth the basic statutory or related authority for maintenance of this system. However, in the course of civil tax and related law enforcement investigations, cases and matters, the Tax Division will occasionally obtain information concerning actual or potential violations of law that are not strictly or technically within its statutory or other authority or may compile information in the course of an investigation which may not be relevant to a specific case. In the interests of effective law enforcement, it is necessary to retain some or all of such information in this system of records since it can aid in establishing patterns of tax compliance and can provide valuable leads for Federal and other law enforcement agencies.

(4)(e)(4) (G) and (H). Since an exemption is being claimed for subsections (f) (Agency Rules) and (d) (Access to Records) of the Act these subsections are inapplicable to the extent that this system of records is exempted from subsection (f) and (d).

(5)(e)(4)(I). The categories of sources of the records in this system have been published in the FEDERAL REGISTER in broad generic terms in the belief that this is all that subsection (e)(4)(I) of the Act requires. In the event, however, that this subsection should be interpreted to require more detail as to the identity of sources of the records in this system, exemption from this provision is necessary in order to protect the confidentiality of the sources of civil tax and related law enforcement information. Such exemption is further necessary to protect the privacy and physical safety of witnesses and informants.

(6)(f). Procedures for notice to an individual pursuant to subsection (f)(1) as to existence of records pertaining to the individual dealing with an actual or potential criminal tax, civil tax, or regulatory investigation or prosecution must be exempted because such notice to an individual would be detrimental to the successful conduct and/or completion of an investigation or case, pending or future. In addition, mere notice of the fact of an investigation could inform the subject or others that their activities are under or may become the subject of an investigation and could enable the subjects to avoid detection, to influence witnesses improperly, to destroy evidence, or to fabricate testimony.

Since an exemption is being claimed for subsection (d) of the Act (Access to Records) the rules required pursuant to subsection (f) (2) through (5) are inapplicable to this system of records to the extent that this system of records is exempted from subsection (d).

(e) The following system of records is exempt from subsections (c)(3) and (d)(1) of the Privacy Act pursuant to 5 U.S.C. 552a(k)(5): Files of Applicants for Attorney and Non-Attorney Positions with the Tax Division, Justice/

TAX–003. These exemptions apply only to the extent that information in a record is subject to exemption pursuant to 5 U.S.C. 552a(k)(5).

(f) Exemption from the particular subsections is justified for the following reasons:

(1) From subsection (c)(3) because an accounting could reveal the identity of confidential sources and result in an unwarranted invasion of the privacy of others. Many persons are contacted who, without an assurance of anonymity, refuse to provide information concerning an applicant for a position with the Tax Division. Disclosure of an accounting could reveal the identity of a source of information and constitutes a breach of the promise of confidentiality by the Tax Division. This would result in the reduction in the free flow of information vital to a determination of an applicant's qualifications and suitability for federal employment.

(2) From subsection (d)(1) because disclosure of records in the system could reveal the identity of confidential sources and result in an unwarranted invasion of the privacy of others. Many persons are contacted who, without an assurance of anonymity, refuse to provide information concerning an applicant for a Tax Division position. Access could reveal the identity of the source of the information and constitute a breach of the promise of confidentiality on the part of the Tax Division. Such breaches ultimately would restrict the free flow of information vital to a determination of an applicant's qualifications and suitability.

[Order No. 742–77, 42 FR 40906, Aug. 12, 1977, as amended by Order No. 6–86, 51 FR 15478, Apr. 24, 1986; Order No. 003–2006, 71 FR 11309, Mar. 7, 2006]

§ 16.96 Exemption of Federal Bureau of Investigation Systems—limited access.

(a) The following system of records is exempt from 5 U.S.C. 552a(c)(3), (d), (e)(1), (e)(2), (e)(3), (e)(4)(G) and (H), (e)(5), (e)(8), (f) and (g):

(1) Central Records System (CRS) (JUSTICE/FBI-002).

These exemptions apply only to the extent that information in this system is subject to exemption pursuant to 5 U.S.C. 552(j) and (k). Where compliance would not appear to interfere with or adversely affect the overall law enforcement process, the applicable exemption may be waived by the FBI.

(b) Exemptions from the particular subsections are justified for the following reasons:

(1) From subsection (c)(3) because making available to a record subject the accounting of disclosures from records concerning him/her would reveal investigative interest by not only the FBI, but also by the recipient agency. This would permit the record subject to take appropriate measures to impede the investigation, e.g., destroy evidence, intimidate potential witnesses or flee the area to avoid the thrust of the investigation.

(2)(i) From subsections (d), (e)(4) (G) and (H), (f) and (g) because these provisions concern individual access to investigative records, compliance with which could compromise sensitive information classified in the interest of national security, interfere with the overall law enforcement process by revealing a pending sensitive investigation, possibly identify a confidential source or disclose information which would constitute an unwarranted invasion of another individual's personal privacy, reveal a sensitive investigative technique, or constitute a potential danger to the health or safety to law enforcement personnel.

(ii) Also, individual access to noncriminal investigative records, e.g., civil investigations and administrative inquiries, as described in subsection (k) of the Privacy Act, could also compromise classified information related to national security, interfere with a pending investigation or internal inquiry, constitute an unwarranted invasion of privacy, reveal a confidential source or sensitive investigative technique, or pose a potential threat to law enforcement personnel. In addition, disclosure of information collected pursuant to an employment suitability or similar inquiry could reveal the identity of a source who provided information under an express promise of confidentiality, or could compromise the objectivity or fairness of a testing or examination process.

(iii) In addition, from paragraph (d)(2) of this section, because to require

the FBI to amend information thought to be incorrect, irrelevant or untimely, because of the nature of the information collected and the essential length of time it is maintained, would create an impossible administrative and investigative burden by forcing the agency to continuously retrograde its investigations attempting to resolve questions of accuracy, etc.

(3) From subsection (e)(1) because:

(i) It is not possible in all instances to determine relevancy or necessity of specific information in the early stages of a criminal or other investigation.

(ii) Relevance and necessity are questions of judgment and timing; what appears relevant and necessary when collected ultimately may be deemed unnecessary. It is only after the information is assessed that its relevancy and necessity in a specific investigative activity can be established.

(iii) In any investigation the FBI might obtain information concerning violations of law not under its jurisdiction, but in the interest of effective law enforcement, dissemination will be made to the agency charged with enforcing such law.

(iv) In interviewing individuals or obtaining other forms of evidence during an investigation, information could be obtained, the nature of which would leave in doubt its relevancy and necessity. Such information, however, could be relevant to another investigation or to an investigative activity under the jurisdiction of another agency.

(4) From subsection (e)(2) because the nature of criminal and other investigative activities is such that vital information about an individual can only be obtained from other persons who are familiar with such individual and his/her activities. In such investigations it is not feasible to rely upon information furnished by the individual concerning his own activities.

(5) From subsection (e)(3) because disclosure would provide the subject with substantial information which could impede or compromise the investigation. The individual could seriously interfere with undercover investigative activities and could take appropriate steps to evade the investigation or flee a specific area.

(6) From subsection (e)(5) because in the collection of information for law enforcement purposes it is impossible to determine in advance what information is accurate, relevant, timely and complete. With the passage of time, seemingly irrelevant or untimely information may acquire new significance as further investigation brings new details to light. The restrictions imposed by subsection (e)(5) would limit the ability of trained investigators and intelligence analysts to exercise their judgment in reporting on investigations and impede the development of criminal intelligence necessary for effective law enforcement. In addition, because many of these records come from other federal, state, local, joint, foreign, tribal, and international agencies, it is administratively impossible to ensure compliance with this provision.

(7) From subsection (e)(8) because the notice requirements of this provision could seriously interfere with a law enforcement activity by alerting the subject of a criminal or other investigation of existing investigative interest.

(c) The following system of records is exempt from 5 U.S.C. 552a(c) (3) and (4), (d), (e) (1), (2) and (3), (e)(4) (G) and (H), (e) (5) and (8), (f), (g) and (m):

(1) Electronic Surveillance (Elsur) Indices (JUSTICE/FBI-006).

These exemptions apply only to the extent that information in the system is subject to exemption pursuant to 5 U.S.C. 552a(j).

(d) Exemptions from the particular subsections are justified for the following reasons:

(1) From subsection (c)(3) because the release of accounting disclosures would place the subject of an investigation on notice that he is under investigation and provide him with significant information concerning the nature of the investigation, resulting in a serious impediment to law enforcement.

(2) From subsections (c)(4), (d), (e)(4) (G) and (H), and (g) because these provisions concern an individual's access to records which concern him and such access to records in this system would compromise ongoing investigations, reveal investigatory techniques and confidential informants, and invade the privacy of private citizens who provide

information in connection with a particular investigation.

(3) From subsection (e)(1) because these indices must be maintained in order to provide the information as described in the ''routine uses'' of this particular system.

(4) From subsections (e) (2) and (3) because compliance is not feasible given the subject matter of the indices.

(5) From subsection (e)(5) because this provision is not applicable to the indices in view of the ''routine uses'' of the indices. For example, it is impossible to predict when it will be necessary to utilize information in the system and, accordingly it is not possible to determine when the records are timely.

(6) From subsection (e)(8) because the notice requirement could present a serious impediment to law enforcement by revealing investigative techniques, procedures and the existence of confidential investigations.

(7) From subsection (m) for the reasons stated in subsection (b)(7) of this section.

(e) The following system of records is exempt from 5 U.S.C. 552a(c) (3) and (4), (d), (e) (1), (2) and (3), (e)(4) (G) and (H), (e) (5) and (8), (f), and (g):

(1) Identification Division Records System (JUSTICE/FBI-009).

These exemptions apply only to the extent that information in this system is subject to exemption pursuant to 5 U.S.C. 552a(j).

(f) Exemptions from the particular subsections are justified for the following reasons:

(1) From subsection (c)(3) for the reasons stated in subsection (d)(1) of this section.

(2) From subsections (c)(4), (d), (e)(4) (G) and (H), (f) and (g) because these provisions concern an individual's access to records which concern him. Such access is directed at allowing the subject of a record to correct inaccuracies in it. Although an alternate system of access has been provided in 28 CFR 16.30 to 34 and 28 CFR 20.34, the vast majority of records in this system concern local arrests which it would be inappropriate for the FBI to undertake to correct.

(3) From subsection (e)(1) because it is impossible to state with any degree of certainty that all information on these records is relevant to accomplish a purpose of the FBI, even though acquisition of the records from state and local law enforcement agencies is based on a statutory requirement. In view of the number of records in the system it is impossible to review them for relevancy.

(4) From subsection (e)(2) because the records in the system are necessarily furnished by criminal justice agencies due to their very nature.

(5) From subsection (e)(3) because compliance is not feasible due to the nature of the records.

(6) From subsection (e)(5) because the vast majority of these records come from local criminal justice agencies and it is administratively impossible to ensure that the records comply with this provision. Submitting agencies are, however, urged on a continuing basis to ensure that their records are accurate and include all dispositions.

(7) From subsection (e)(8) because the FBI has no logical manner to ascertain whether process has been made public and compliance with this provision would in any case, provide an impediment to law enforcement by interfering with the ability to issue warrants or subpoenas and by revealing investigative techniques, procedures or evidence.

(g) The following system of records is exempt from 5 U.S.C. 552a (c)(3) and (4), (d), (e)(1), (e)(2), (e)(3), (e)(4)(G) and (H), (e)(5), (e)(8), (f), and (g):

(1) National Crime Information Center (NCIC) (JUSTICE/FBI-001). These exemptions apply only to the extent that information in the system is subject to exemption pursuant to 5 U.S.C. 552a(j)(2) and (k)(3).

(h) Exemptions from the particular subsections are justified for the following reasons:

(1) From subsection (c)(3) for the reasons stated in subsection (d)(1) of this section.

(2) From subsections (c)(4), (d), (e)(4) (G) and (H), and (g) for the reasons stated in subsection (d)(2) of this section. When records are properly subject to access by the individual, an alternate means of access is provided in subsection (i) of this section.

(3) From subsection (e)(1) because information contained in this system is primarily from state and local records, and it is for the official use of agencies outside the Federal Government in accordance with 28 U.S.C. 534.

(4) From subsections (e) (2) and (3) because it is not feasible to comply with these provisions given the nature of this system.

(5) From subsection (e)(5) because in the collection of information for law enforcement purposes it is impossible to determine in advance what information is accurate, relevant, timely and complete. With the passage of time, seemingly irrelevant or untimely information may acquire new significance as further investigation brings new details to light. The restrictions imposed by subsection (e)(5) would limit the ability of trained investigators and intelligence analysts to exercise their judgment in reporting on investigations and impede the development of criminal intelligence necessary for effective law enforcement. In addition, the vast majority of these records come from other federal, state, local, joint, foreign, tribal, and international agencies and it is administratively impossible to ensure that the records comply with this provision. Submitting agencies are, however, urged on a continuing basis to ensure that their records are accurate and include all dispositions.

(6) From subsection (e)(8) for the reasons stated in subsection (d)(6) of this section.

(i) Access to computerized criminal history records in the National Crime Information Center is available to the individual who is the subject of the record pursuant to procedures and requirements specified in the Notice of Systems of Records compiled by the National Archives and Records Service and published under the designation:

(j) The following system of records is exempt from 5 U.S.C. 552a (c)(3), (d), (e)(1), (e)(4)(G) and (H), (e)(5), (f) and (g):

(1) National Center for the Analysis of Violent Crime (NCAVC) (JUSTICE/FBI-015).

These exemptions apply only to the extent that information in this system is subject to exemption pursuant to 5 U.S.C. 552a (j)(2) and (k)(2).

(k) Exemptions from the particular subsections are justified for the following reasons:

(1) From subsection (c)(3) because providing the accounting of disclosures to the subject could prematurely reveal investigative interest by the FBI and other law enforcement agencies, thereby providing the individual an opportunity to impede an active investigation, destroy or alter evidence, and possibly render harm to violent crime victims and/or witnesses.

(2) From subsections (d), (e)(4) (G) and (H), and (f) because disclosure to the subject could interfere with enforcement proceedings of a criminal justice agency, reveal the identity of a confidential source, result in an unwarranted invasion of another's privacy, reveal the details of a sensitive investigative technique, or endanger the life and safety of law enforcement personnel, potential violent crime victims, and witnesses. Disclosure also could prevent the future apprehension of a violent or exceptionally dangerous criminal fugitive should he or she modify his or her method of operation in order to evade law enforcement. Also, specifically from subsection (d)(2), which permits an individual to request amendment of a record, because the nature of the information in the system is such that an individual criminal offender would frequently demand amendment of derogatory information, forcing the FBI to continuously retrograde its criminal investigations in an attempt to resolve questions of accuracy, etc.

(3) From subsection (g) because the system is exempt from the access and amendment provisions of subsection (d).

(4) From subsection (e)(1) because it is not always possible to establish relevance and necessity of the information at the time it is obtained or developed. Information, the relevance and necessity of which may not be readily apparent, frequently can prove to be of investigative value at a later date and time.

(5) From subsection (e)(5) because in the collection of information for law enforcement purposes it is impossible

to determine in advance what information is accurate, relevant, timely and complete. With the passage of time, seemingly irrelevant or untimely information may acquire new significance as further investigation brings new details to light. The restrictions imposed by subsection (e)(5) would limit the ability of trained investigators and intelligence analysts to exercise their judgment in reporting on investigations and impede the development of criminal intelligence necessary for effective law enforcement. In addition, because many of these records come from other federal, state, local, joint, foreign, tribal, and international agencies, it is administratively impossible to ensure compliance with this provision.

(l) The following system of records is exempt from 5 U.S.C. 552a (c)(3), (c)(4), (d), (e) (1), (2), and (3), (e)(4) (G) and (H), (e)(5), (e)(8), (f) and (g).

(1) FBI Counterdrug Information Indices System (CIIS) (JUSTICE/FBI—016)

(2) [Reserved]

(m) These exemptions apply only to the extent that information in this system is subject to exemption pursuant to 5 U.S.C. 552a (j)(2). Exemptions from the particular subsections are justified for the following reasons:

(1) From subsection (c)(3) because making available to a record subject the accounting of disclosures from records concerning him/her would reveal investigative interest by not only the FBI, but also by the recipient agency. This would permit the record subject to take appropriate measures to impede the investigation, e.g., destroy evidence, intimidate potential witnesses or flee the area to avoid the thrust of the investigation.

(2) From subsection (c)(4) to the extent it is not applicable because an exemption is being claimed from subsection (d).

(3)(i) From subsections (d), (e)(4) (G) and (H) because these provisions concern individual access to records, compliance with which could compromise sensitive information, interfere with the overall law enforcement process by revealing a pending sensitive investigation, possibly identify a confidential source or disclose information which would constitute an unwarranted invasion of another individual's personal privacy, reveal a sensitive investigative technique, or constitute a potential danger to the health or safety of law enforcement personnel.

(ii) In addition, from paragraph (d), because to require the FBI to amend information thought to be incorrect, irrelevant or untimely, because of the nature of the information collected and the essential length of time it is maintained, would create an impossible administrative and investigative burden by forcing the agency to continuously retrograde its investigations attempting to resolve questions of accuracy, etc.

(4)(i) From subsection (e)(1) because it is not possible in all instances to determine relevancy or necessity of specific information in the early stages of a criminal or other investigation.

(ii) Relevance and necessity are questions of judgment and timing; what appears relevant and necessary when collected ultimately may be deemed otherwise. It is only after the information is assessed that its relevancy and necessity in a specified investigative activity can be established.

(iii) In any investigation the FBI might obtain information concerning violations of law not under its jurisdiction, but in the interest of effective law enforcement, dissemination will be made to the agency charged with enforcing such law.

(iv) In interviewing individuals or obtaining other forms of evidence during an investigation, information could be obtained, the nature of which would leave in doubt its relevancy and necessity. Such information, however, could be relevant to another investigations or to an investigative activity under the jurisdiction of another agency.

(5) From subsection (e)(2) because the nature of criminal and other investigative activities is such that vital information about an individual often can only be obtained from other persons who are familiar with such individual and his/her activities. In such investigations it is not feasible to principally rely upon information furnished by the individual concerning his own activities.

(6) From subsection (e)(3) because disclosure would provide the subject with information which could impede or compromise the investigation. The individual could seriously interfere with undercover investigative activities and could take appropriate steps to evade the investigation or flee a specific area.

(7) From subsection (e)(5) because in the collection of information for law enforcement purposes it is impossible to determine in advance what information is accurate, relevant, timely and complete. With the passage of time, seemingly irrelevant or untimely information may acquire new significance as further investigation brings new details to light. The restrictions imposed by subsection (e)(5) would restrict the ability of trained investigators and intelligence analysts to exercise their judgment in reporting on investigations and impede the development of criminal intelligence necessary for effective law enforcement.

(8) From subsection (e)(8) because the notice requirements of this provision could seriously interfere with a law enforcement activity by alerting the subject of a criminal or other investigation of existing investigative interest.

(9) From subsection (f) to the extent that this system is exempt from the provisions of subsection (d).

(10) From subsection (g) to the extent that this system of records is exempt from the provisions of subsection (d).

(n) The following system of records is exempt from 5 U.S.C. 552a (c) (3) and (4); (d); (e) (1), (2), and 3; (e)(4) (G) and (H); (e) (5) and (8); and (g):

(1) National DNA Index System (NDIS) (JUSTICE/FBI-017).

(2) [Reserved]

(o) These exemptions apply only to the extent that information in the system is subject to exemption pursuant to 5 U.S.C. 552a(j)(2). Exemptions from the particular subsections are justified for the following reasons:

(1) From subsection (c)(3) because making available the accounting of disclosures of records to the subject of the record would prematurely place the subject on notice of the investigative interest of law enforcement agencies, provide the subject with significant information concerning the nature of the investigation, or permit the subject to take measures to impede the investigation (e.g., destroy or alter evidence, intimidate potential witnesses, or flee the area to avoid investigation and prosecution), and result in a serious impediment to law enforcement.

(2)(i) From subsections (c)(4), (d), (e)(4) (G) and (H), and (g) because these provisions concern an individual's access to records which concern him/her and access to records in this system would compromise ongoing investigations. Such access is directed at allowing the subject of the record to correct inaccuracies in it. The vast majority of records in this system are from the DNA records of local and State NDIS agencies which would be inappropriate and not feasible for the FBI to undertake to correct. Nevertheless, an alternate method to access and/or amend records in this system is available to an individual who is the subject of a record pursuant to procedures and requirements specified in the Notice of Systems of Records compiled by the National Archives and Records Administration and published in the FEDERAL REGISTER under the designation: National DNA Index System (NDIS) (JUSTICE/FBI-017)

(ii) In addition, from paragraph (d)(2) of this section, because to require the FBI to amend information thought to be incorrect, irrelevant, or untimely, because of the nature of the information collected and the essential length of time it is maintained, would create an impossible administrative and investigative burden by forcing the agency to continuously retrograde investigations attempting to resolve questions of accuracy, etc.

(iii) In addition, from subsection (g) to the extent that the system is exempt from the access and amendment provisions of subsection (d).

(3) From subsection (e)(1) because:

(i) Information in this system is primarily from State and local records and it is for the official use of agencies outside the Federal Government.

(ii) It is not possible in all instances to determine the relevancy or necessity of specific information in the early stages of the criminal investigative process.

(iii) Relevance and necessity are questions of judgment and timing; what appears relevant and necessary when collected ultimately may be deemed unnecessary, and vice versa. It is only after the information is assessed that its relevancy in a specific investigative activity can be established.

(iv) Although the investigative process could leave in doubt the relevancy and necessity of evidence which had been properly obtained, the same information could be relevant to another investigation or investigative activity under the jurisdiction of the FBI or another law enforcement agency.

(4) From subsections (e)(2) and (3) because it is not feasible to comply with these provisions given the nature of this system. Most of the records in this system are necessarily furnished by State and local criminal justice agencies and not by individuals due to the very nature of the records and the system.

(5) From subsection (e)(5) because the vast majority of these records come from State and local criminal justice agencies and because it is administratively impossible for them and the FBI to insure that the records comply with this provision. Submitting agencies are urged and make every effort to insure records are accurate and complete; however, since it is not possible to predict when information in the indexes of the system (whether submitted by State and local criminal justice agencies or generated by the FBI) will be matched with other information, it is not possible to determine when most of them are relevant or timely.

(6) From subsection (e)(8) because the FBI has no logical manner to determine whenever process has been made public and compliance with this provision would provide an impediment to law enforcement by interfering with ongoing investigations.

(p) The National Instant Criminal Background Check System (NICS), (JUSTICE/FBI-018), a Privacy Act system of records, is exempt:

(1) Pursuant to 5 U.S.C. 552a(j)(2), from subsections (c) (3) and (4); (d); (e) (1), (2) and (3); (e)(4) (G) and (H); (e) (5) and (8); and (g); and

(2) Pursuant to 5 U.S.C. 552a(k) (2) and (3), from subsections (c)(3), (d), (e)(1), and (e)(4) (G) and (H).

(q) These exemptions apply only to the extent that information in the system is subject to exemption pursuant to 5 U.S.C. 552a(j)(2), (k)(2), and (k)(3). Exemptions from the particular subsections are justified for the following reasons:

(1) From subsection (c)(3) because the release of the accounting of disclosures would place the subject on notice that the subject is or has been the subject of investigation and result in a serious impediment to law enforcement.

(2) From subsection (c)(4) to the extent that it is not applicable since an exemption is claimed from subsection (d).

(3)(i) From subsections (d) and (e)(4) (G) and (H) because these provisions concern an individual's access to records which concern the individual and such access to records in the system would compromise ongoing investigations, reveal investigatory techniques and confidential informants, invade the privacy of persons who provide information in connection with a particular investigation, or constitute a potential danger to the health or safety of law enforcement personnel.

(ii) In addition, from subsection (d)(2) because, to require the FBI to amend information thought to be not accurate, timely, relevant, and complete, because of the nature of the information collected and the essential length of time it is maintained, would create an impossible administrative burden by forcing the agency to continuously update its investigations attempting to resolve these issues.

(iii) Although the Attorney General is exempting this system from subsections (d) and (e)(4) (G) and (H), an alternate method of access and correction has been provided in 28 CFR, part 25, subpart A.

(4) From subsection (e)(1) because it is impossible to state with any degree of certainty that all information in these records is relevant to accomplish a purpose of the FBI, even though acquisition of the records from state and local law enforcement agencies is based on a statutory requirement. In view of the number of records in the system, it

is impossible to review them for relevancy.

(5) From subsections (e) (2) and (3) because the purpose of the system is to verify information about an individual. It would not be realistic to rely on information provided by the individual. In addition, much of the information contained in or checked by this system is from Federal, State, and local criminal history records.

(6) From subsection (e)(5) because it is impossible to predict when it will be necessary to use the information in the system, and, accordingly, it is not possible to determine in advance when the records will be timely. Since most of the records are from State and local or other Federal agency records, it would be impossible to review all of them to verify that they are accurate. In addition, an alternate procedure is being established in 28 CFR, part 25, subpart A, so the records can be amended if found to be incorrect.

(7) From subsection (e)(8) because the notice requirement could present a serious impediment to law enforcement by revealing investigative techniques and confidential investigations.

(8) From subsection (g) to the extent that, pursuant to subsections (j)(2), (k)(2), and (k)(3), the system is exempted from the other subsections listed in paragraph (p) of this section.

(r) The following system of records is exempt from 5 U.S.C. 552a(c)(3) and (4); (d)(1), (2), (3), and (4); (e)(1), (2), (3), (5), and (8); and (g):

(1) Terrorist Screening Records System (TSRS) (JUSTICE/FBI–019).

(2) These exemptions apply only to the extent that information in this system is subject to exemption pursuant to 5 U.S.C. 552a(j)(2), (k)(1), and (k)(2). Where compliance would not appear to interfere with or adversely affect the counterterrorism purposes of this system, and the overall law enforcement process, the applicable exemption may be waived by the FBI in its sole discretion.

(s) Exemptions from the particular subsections are justified for the following reasons:

(1) From subsection (c)(3) because making available to a record subject the accounting of disclosures from records concerning him/her would specifically reveal any investigative interest in the individual. Revealing this information could reasonably be expected to compromise ongoing efforts to investigate a known or suspected terrorist by notifying the record subject that he/she is under investigation. This information could also permit the record subject to take measures to impede the investigation, *e.g.*, destroy evidence, intimidate potential witnesses, or flee the area to avoid or impede the investigation. Similarly, disclosing this information to individuals who have been misidentified as known or suspected terrorists due to a close name similarity could reveal the Government's investigative interest in a terrorist suspect, because it could make known the name of the individual who actually is the subject of the Government's interest. Consequently, the Government has as great an interest in protecting the confidentiality of identifying information of misidentified persons as it does in protecting the confidentiality of the identities of known or suspected terrorists.

(2) From subsection (c)(4) because this system is exempt from the access and amendment provisions of subsection (d).

(3) From subsections (d)(1), (2), (3), and (4) because these provisions concern individual access to and amendment of records contained in this system, which consists of counterterrorism, investigatory and intelligence records. Compliance with these provisions could alert the subject of a terrorism investigation of the fact and nature of the investigation, and/or the investigative interest of the FBI and/or other intelligence or law enforcement agencies; compromise sensitive information classified in the interest of national security; interfere with the overall law enforcement process by leading to the destruction of evidence, improper influencing of witnesses, fabrication of testimony, and/or flight of the subject; could identify a confidential source or disclose information which would constitute an unwarranted invasion of another's personal privacy; reveal a sensitive investigative or intelligence technique; or constitute a potential danger to the health

or safety of law enforcement personnel, confidential informants, and witnesses. Amendment of these records would interfere with ongoing counterterrorism investigations and analysis activities and impose an impossible administrative burden by requiring investigations, analyses, and reports to be continuously reinvestigated and revised. Similarly, compliance with these provisions with respect to records on individuals who have been misidentified as known or suspected terrorists due to a close name similarity could reveal the Government's investigative interest in a terrorist suspect, because it could make known the name of the individual who actually is the subject of the Government's interest.

(4) From subsection (e)(1) because it is not always possible for TSC to know in advance what information is relevant and necessary for it to complete an identity comparison between the individual being screened and a known or suspected terrorist. Also, because TSC and the FBI may not always know what information about an encounter with a known or suspected terrorist will be relevant to law enforcement for the purpose of conducting an operational response.

(5) From subsection (e)(2) because application of this provision could present a serious impediment to counterterrorism efforts in that it would put the subject of an investigation, study or analysis on notice of that fact, thereby permitting the subject to engage in conduct designed to frustrate or impede that activity. The nature of counterterrorism investigations is such that vital information about an individual frequently can be obtained only from other persons who are familiar with such individual and his/her activities. In such investigations it is not feasible to rely upon information furnished by the individual concerning his own activities.

(6) From subsection (e)(3), to the extent that this subsection is interpreted to require TSC to provide notice to an individual if TSC receives information about that individual from a third party. Should the subsection be so interpreted, exemption from this provision is necessary to avoid impeding counterterrorism efforts by putting the subject of an investigation, study or analysis on notice of that fact, thereby permitting the subject to engage in conduct intended to frustrate or impede that activity.

(7) From subsection (e)(5) because many of the records in this system are derived from other domestic and foreign agency record systems and therefore it is not possible for the FBI and the TSC to vouch for their compliance with this provision; however, the TSC has implemented internal quality assurance procedures to ensure that TSC terrorist screening data is as thorough, accurate, and current as possible. In addition, TSC supports but does not conduct investigations; therefore, it must be able to collect information related to terrorist identities and encounters for distribution to law enforcement and intelligence agencies that do conduct terrorism investigations. In the collection of information for law enforcement, counterterrorism, and intelligence purposes, it is impossible to determine in advance what information is accurate, relevant, timely, and complete. With the passage of time, seemingly irrelevant or untimely information may acquire new significance as further investigation brings new details to light. The restrictions imposed by (e)(5) would limit the ability of those agencies' trained investigators and intelligence analysts to exercise their judgment in conducting investigations and impede the development of intelligence necessary for effective law enforcement and counterterrorism efforts. The TSC has, however, implemented internal quality assurance procedures to ensure that TSC terrorist screening data is as thorough, accurate, and current as possible. The FBI also is exempting the TSRS from the requirements of subsection (e)(5) in order to prevent the use of a challenge under subsection (e)(5) as a collateral means to obtain access to records in the TSRS. The FBI has exempted TSRS records from the access and amendment requirements of subsection (d) of the Privacy Act in order to protect the integrity of counterterrorism investigations. Exempting the TSRS from subsection (e)(5) serves to prevent the assertion of

challenges to a record's accuracy, timeliness, completeness, and/or relevance under subsection (e)(5) to circumvent the exemption claimed from subsection (d).

(8) From subsection (e)(8) because to require individual notice of disclosure of information due to compulsory legal process would pose an impossible administrative burden on the FBI and the TSC and could alert the subjects of counterterrorism, law enforcement, or intelligence investigations to the fact of those investigations when not previously known.

(9) From subsection (g) to the extent that the system is exempt from other specific subsections of the Privacy Act.

[Order No. 40–80, 45 FR 5301, Jan. 23, 1980, as amended by Order No. 64–81, 46 FR 20540, Apr. 6, 1981; Order No. 63–81, 46 FR 22362, Apr. 17, 1981; Order No. 67–81, 46 FR 30495, June 9, 1981; Order No. 15–85, 50 FR 31361, Aug. 2, 1985; Order No. 6–86, 51 FR 15479, Apr. 24, 1986; Order No. 94–94, 59 FR 47081, Sept. 14, 1994; Order No. 124–96, 61 FR 65180, Dec. 11, 1996; Order No. 155–98, 63 FR 65062, Nov. 25, 1998; Order No. 010–2003, 68 FR 14140, Mar. 24, 2003; Order No. 010–2005, 70 FR 72204, Dec. 2, 2005]

§ 16.97 Exemption of Bureau of Prisons Systems—limited access.

(a) The following systems of records are exempt from 5 U.S.C. 552a (c) (3) and (4), (d), (e) (2) and (3), (e)(4) (H), (e)(8), (f) and (g):

(1) Custodial and Security Record System (JUSTICE/BOP–001).

(2) Industrial Inmate Employment Record System (JUSTICE/BOP–003).

(3) Inmate Administrative Remedy Record System (JUSTICE/BOP–004).

(4) Inmate Central Record System (JUSTICE/BOP–005).

(5) Inmate Commissary Accounts Record System (JUSTICE/BOP–006).

(6) Inmate Physical and Mental Health Record System (JUSTICE/BOP–007).

(7) Inmate Safety and Accident Compensation Record System (JUSTICE/BOP–008).

(8) Federal Tort Claims Act Record System (JUSTICE/BOP–009).

These exemptions apply only to the extent that information in these systems is subject to exemption pursuant to 5 U.S.C. 552a(j).

(b) Exemptions from the particular subsections are justified for the following reasons:

(1) From subsection (c)(3) because inmates will not be permitted to gain access or to contest contents of these record systems under the provisions of subsection (d) of 5 U.S.C. 552a. Revealing disclosure accountings can compromise legitimate law enforcement activities and Bureau of Prisons responsibilities.

(2) From subsection (c)(4) because exemption from provisions of subsection (d) will make notification of formal disputes inapplicable.

(3) From subsection (d) because exemption from this subsection is essential to protect internal processes by which Bureau personnel are able to formulate decisions and policies with regard to federal prisoners, to prevent disclosure of information to federal inmates that would jeopardize legitimate correctional interests of security, custody, or rehabilitation, and to permit receipt of relevant information from other federal agencies, state and local law enforcement agencies, and federal and state probation and judicial offices.

(4) From subsection (e)(2) because primary collection of information directly from federal inmates about criminal sentences or criminal records is highly impractical and inappropriate.

(5) From subsection (e)(3) because in view of the Bureau of Prisons' responsibilities, application of this provision to its operations and collection of information is inappropriate.

(6) From subsection (e)(4)(H) because exemption from provisions of subsection (d) will make publication of agency procedures under this subsection inapplicable.

(7) From subsection (e)(8) because the nature of Bureau of Prisons law enforcement activities renders notice of compliance with compulsory legal process impractical.

(8) From subsection (f) because exemption from provisions of subsection (d) will render compliance with provisions of this subsection inapplicable.

(9) From subsection (g) because exemption from provisions of subsection

(d) will render provisions of this subsection inapplicable.

(c) The following system of records is exempted pursuant to 5 U.S.C. 552a(j)(2) from subsections (c)(3) and (4), (d), (e)(1), (2) and (3), (e)(5) and (e)(8), and (g). In addition, the following system of records is exempted pursuant to 5 U.S.C. 552a(k)(2) from subsections (c)(3), (d), and (e)(1):

Bureau of Prisons Access Control Entry/Exit, (JUSTICE/BOP–010).

(d) These exemptions apply only to the extent that information in these systems is subject to exemption pursuant to 5 U.S.C. 552a(j)(2) or (k)(2). Where compliance would not appear to interfere with or adversely affect the law enforcement process, and/or where it may be appropriate to permit individuals to contest the accuracy of the information collected, e.g. public source materials, or those supplied by third parties, the applicable exemption may be waived, either partially or totally, by the BOP. Exemptions from the particular subsections are justified for the following reasons:

(1) From subsection (c)(3) for similar reasons as those enumerated in paragraph (3).

(2) From subsection (c)(4) to the extent that exemption from subsection (d) will make notification of corrections or notations of disputes inapplicable.

(3) From the access provisions of subsection (d) to the extent that exemption from this subsection may appear to be necessary to prevent access by record subjects to information that may jeopardize the legitimate correctional interests of safety, security, and good order of Bureau of Prisons facilities; to protect the privacy of third parties; and to protect access to relevant information received from third parties, such as other Federal State, local and foreign law enforcement agencies, Federal and State probation and judicial offices, the disclosure of which may permit a record subject to evade apprehension, prosecution, etc.; and/or to otherwise protect investigatory or law enforcement information, whether received from other third parties, or whether developed internally by the BOP.

(4) From the amendment provisions of subsection (d) because amendment of the records would interfere with law enforcement operations and impose an impossible administrative burden. In addition to efforts to ensure accuracy so as to withstand possible judicial scrutiny, it would require that law enforcement and investigatory information be continuously reexamined, even where the information may have been collected from the record subject. Also, where records are provided by other Federal criminal justice agencies or other State, local and foreign jurisdictions, it may be administratively impossible to ensure compliance with this provision.

(5) From subsection (e)(1) to the extent that the BOP may collect information that may be relevant to the law enforcement operations of other agencies. In the interests of overall, effective law enforcement, such information should be retained and made available to those agencies with relevant responsibilities.

(6) From subsection (e)(2) because primary collection of information directly from the record subject is often highly impractical, inappropriate and could result in inaccurate information.

(7) From subsection (e)(3) because compliance with this subsection may impede the collection of information that may be valuable to law enforcement interests.

(8) From subsection (e)(5) because in the collection and maintenance of information for law enforcement purposes, it is impossible to determine in advance what information is accurate, relevant, timely and complete. Data which may seem unrelated, irrelevant or incomplete when collected may take on added meaning or significance as an investigation progresses or with the passage of time, and could be relevant to future law enforcement decisions.

(9) From subsection (e)(8) because the nature of BOP law enforcement activities renders notice of compliance with compulsory legal process impractical and could seriously jeopardize institution security and personal safety and/or impede overall law enforcement efforts.

(10) From subsection (g) to the extent that the system is exempted from subsection (d).

(e) The following system of records is exempt from 5 U.S.C. 552a (c) (3) and (4), (d), (e) (2) and (3), (e)(5) and (e)(8), (f) and (g):

Telephone Activity Record System (JUSTICE/BOP–011).

(f) These exemptions apply only to the extent that information in this system is subject to exemption pursuant to 5 U.S.C. 552a (j)(2) and/or (k)(2). Where compliance would not appear to interfere with or adversely affect the law enforcement process, and/or where it may be appropriate to permit individuals to contest the accuracy of the information collected, the applicable exemption may be waived, either partially or totally, by the BOP. Exemptions from the particular subsections are justified for the following reasons:

(1) From subsection (c)(3) to the extent that this system of records is exempt from subsection (d), and for such reasons as those cited for subsection (d) in paragraph (f)(3) below.

(2) From subsection (c)(4) to the extent that exemption from subsection (d) makes this exemption inapplicable.

(3) From the access provisions of subsection (d) because exemption from this subsection is essential to prevent access of information by record subjects that may invade third party privacy; frustrate the investigative process; jeopardize the legitimate correctional interests of safety, security, and good order to prison facilities; or otherwise compromise, impede, or interfere with BOP or other law enforcement agency activities.

(4) From the amendment provisions from subsection (d) because amendment of the records may interfere with law enforcement operations and would impose an impossible administrative burden by requiring that, in addition to efforts to ensure accuracy so as to withstand possible judicial scrutiny, it would require that law enforcement information be continuously reexamined, even where the information may have been collected from the record subject. Also, some of these records come from other Federal criminal justice agencies or State, local and foreign jurisdictions, or from Federal and State probation and judicial offices, and it is administratively impossible to ensure that the records comply with this provision.

(5) From subsection (e)(2) because the nature of criminal and other investigative activities is such that vital information about an individual can be obtained from other persons who are familiar with such individual and his/her activities. In such investigations it is not feasible to rely solely upon information furnished by the individual concerning his/her own activities since it may result in inaccurate information.

(6) From subsection (e)(3) because in view of BOP's operational responsibilities, application of this provision to the collection of information is inappropriate. Application of this provision could provide the subject with substantial information which may in fact impede the information gathering process or compromise an investigation.

(7) From subsection (e)(5) because in the collection and maintenance of information for law enforcement purposes, it is impossible to determine in advance what information is accurate, relevant, timely and complete. Material which may seem unrelated, irrelevant or incomplete when collected may take on added meaning or significance at a later date or as an investigation progresses. Also, some of these records may come from other Federal, State, local and foreign law enforcement agencies, and from Federal and State probation and judicial offices and it is administratively impossible to ensure that the records comply with this provision. It would also require that law enforcement information be continuously reexamined even where the information may have been collected from the record subject.

(8) From subsection (e)(8) because the nature of BOP law enforcement activities renders impractical the notice of compliance with compulsory legal process. This requirement could present a serious impediment to law enforcement such as revealing investigative techniques or the existence of confidential investigations, jeopardize

the security of third parties, or otherwise compromise law enforcement efforts.

(9)–(10) [Reserved]

(11) From subsections (f) and (g) to the extent that this system is exempt from the access and amendment provisions of subsection (d).

(g) The following system of records is exempt pursuant to the provisions of 5 U.S.C. 552a(j)(2) from subsections (c) (3) and (4), (d), (e) (1), (2), and (3), (e)(5) and (e)(8), and (g) of 5 U.S.C. 552a. In addition, the following system of records is exempt pursuant to the provisions of 5 U.S.C. 552a (k)(1) and (k)(2) from subsections (c)(3), (d), and (e)(1) of 5 U.S.C. 552a:

Bureau of Prisons, Office of Internal Affairs Investigative Records, JUSTICE/BOP–012

(h) These exemptions apply only to the extent that information in this system is subject to exemption pursuant to 5 U.S.C. 552a (j)(2), (k)(1), and (k)(2). Where compliance would not appear to interfere with or adversely affect the law enforcement process, and/or where it may be appropriate to permit individuals to contest the accuracy of the information collected, e.g., public source materials, the applicable exemption may be waived, either partially or totally, by the Office of Internal Affairs (OIA). Exemptions from the particular subsections are justified for the following reasons:

(1) From subsection (c)(3) because release of disclosure accounting could alert the subject of an investigation of an actual or potential criminal, civil, or regulatory violation to the existence of the investigation and the fact that they are subjects of the investigation, and reveal investigative interest by not only the OIA but also by the recipient agency. Since release of such information to the subjects of an investigation would provide them with significant information concerning the nature of the investigation, release could result in activities that would impede or compromise law enforcement such as: the destruction of documentary evidence; improper influencing of witnesses; endangerment of the physical safety of confidential sources, witnesses, and law enforcement personnel; fabrication of testimony; and flight of the subject from the area. In addition, release of disclosure accounting could result in the release of properly classified information which could compromise the national defense or disrupt foreign policy.

(2) From subsection (c)(4) because this system is exempt from the access provisions of subsection (d) pursuant to subsections (j) and (k) of the Privacy Act.

(3) From the access and amendment provisions of subsection (d) because access to the records contained in this system of records could provide the subject of an investigation with information concerning law enforcement activities such as that relating to an actual or potential criminal, civil or regulatory violation; the existence of an investigation; the nature and scope of the information and evidence obtained as to his activities; the identity of confidential sources, witnesses, and law enforcement personnel; and information that may enable the subject to avoid detection or apprehension. Such disclosure would present a serious impediment to effective law enforcement where they prevent the successful completion of the investigation; endanger the physical safety of confidential sources, witnesses, and law enforcement personnel; and/or lead to the improper influencing of witnesses, the destruction of evidence, or the fabrication of testimony. In addition, granting access to such information could disclose security-sensitive or confidential business information or information that would constitute an unwarranted invasion of the personal privacy of third parties. Finally, access to the records could result in the release of properly classified information which could compromise the national defense or disrupt foreign policy. Amendment of the records would interfere with ongoing investigations and law enforcement activities and impose an impossible administrative burden by requiring investigations to be continuously reinvestigated.

(4) From subsection (e)(1) because the application of this provision could impair investigations and interfere with the law enforcement responsibilities of the OIA for the following reasons:

(i) It is not possible to detect relevance or necessity of specific information in the early stages of a civil, criminal or other law enforcement investigation, case, or matter, including investigations in which use is made of properly classified information. Relevance and necessity are questions of judgment and timing, and it is only after the information is evaluated that the relevance and necessity of such information can be established.

(ii) During the course of any investigation, the OIA may obtain information concerning actual or potential violations of laws other than those within the scope of its jurisdiction. In the interest of effective law enforcement, the OIA should retain this information as it may aid in establishing patterns of criminal activity, and can provide valuable leads for Federal and other law enforcement agencies.

(iii) In interviewing individuals or obtaining other forms of evidence during an investigation, information may be supplied to an investigator which relates to matters incidental to the primary purpose of the investigation but which may relate also to matters under the investigative jurisdiction of another agency. Such information cannot readily be segregated.

(5) From subsection (e)(2) because, in some instances, the application of this provision would present a serious impediment to law enforcement for the following reasons:

(i) The subject of an investigation would be placed on notice as to the existence of an investigation and would therefore be able to avoid detection or apprehension, to improperly influence witnesses, to destroy evidence, or to fabricate testimony.

(ii) In certain circumstances the subject of an investigation cannot be required to provide information to investigators, and information relating to a subject's illegal acts, violations of rules of conduct, or any other misconduct must be obtained from other sources.

(iii) In any investigation it is necessary to obtain evidence from a variety of sources other than the subject of the investigation in order to verify the evidence necessary for successful litigation.

(6) From subsection (e)(3) because the application of this provision would provide the subject of an investigation with substantial information which could impede or compromise the investigation. Providing such notice to a subject of an investigation could interfere with an undercover investigation by revealing its existence, and could endanger the physical safety of confidential sources, witnesses, and investigators by revealing their identities.

(7) From subsection (e)(5) because the application of this provision would prevent the collection of any data not shown to be accurate, relevant, timely, and complete at the moment it is collected. In the collection of information for law enforcement purposes, it is impossible to determine in advance what information is accurate, relevant, timely, and complete. Material which may seem unrelated, irrelevant, or incomplete when collected may take on added meaning or significance as an investigation progresses. The restrictions of this provision could interfere with the preparation of a complete investigation report, and thereby impede effective law enforcement.

(8) From subsection (e)(8) because the application of this provision could prematurely reveal an ongoing criminal investigation to the subject of the investigation, and could reveal investigation techniques, procedures, and/or evidence.

(9) From subsection (g) to the extent that this system is exempt from the access and amendment provisions of subsection (d) pursuant to subsections (j)(2), (k)(1), and (k)(2) of the Privacy Act.

(i) Consistent with the legislative purpose of the Privacy Act of 1974 (Pub. L. 93–579) the BOP has initiated a procedure whereby federal inmates in custody may gain access and review their individual prison files maintained at the institution of incarceration. Access to these files will be limited only to the extent that the disclosure of records to the inmate would jeopardize internal decision-making or policy determinations essential to the effective operation of the Bureau of Prisons; to the extent that disclosure of the records to the inmate would jeopardize

privacy rights of others, or a legitimate correctional interest of security, custody, or rehabilitation; and to the extent information is furnished with a legitimate expectation of confidentiality. The Bureau of Prisons will continue to provide access to former inmates under existing regulations as is consistent with the interests listed above. Under present Bureau of Prisons regulations, inmates in federal institutions may file administrative complaints on any subject under the control of the Bureau. This would include complaints pertaining to information contained in these systems of records.

(j) The following system of records is exempted pursuant to 5 U.S.C. 552a(j) from subsections (e)(1) and (e)(5): Bureau of Prisons Inmate Central Records System, (Justice/BOP–005).

(k) These exemptions apply only to the extent that information in this system is subject to exemption pursuant to 5 U.S.C. 552a(j). Where compliance would not appear to interfere with or adversely affect the law enforcement process, and/or where it may be appropriate to permit individuals to contest the accuracy of the information collected, *e.g.* public source materials, or those supplied by third parties, the applicable exemption may be waived, either partially or totally, by the Bureau. Exemptions from the particular subsections are justified for the following reasons:

(1) From subsection (e)(1) to the extent that the Bureau may collect information that may be relevant to the law enforcement operations of other agencies. In the interests of overall, effective law enforcement, such information should be retained and made available to those agencies with relevant responsibilities.

(2) From subsection (e)(5) because in the collection and maintenance of information for law enforcement purposes, it is impossible to determine in advance what information is accurate, relevant, timely and complete. Data which may seem unrelated, irrelevant or incomplete when collected may take on added meaning or significance during the course of an investigation or with the passage of time, and could be relevant to future law enforcement decisions. In addition, because many of these records come from the courts and other state and local criminal justice agencies, it is administratively impossible for them and the Bureau to ensure compliance with this provision. The restrictions of subsection (e)(5) would restrict and delay trained correctional managers from timely exercising their judgment in managing the inmate population and providing for the safety and security of the prisons and the public.

(l) The following system of records is exempted pursuant to 5 U.S.C. 552a(j) from subsections (e)(1) and (e)(5): Bureau of Prisons Inmate Trust Fund Accounts and Commissary Record System, (Justice/BOP–006).

(m) These exemptions apply only to the extent that information in this system is subject to exemption pursuant to 5 U.S.C. 552a(j). Where compliance would not appear to interfere with or adversely affect the law enforcement process, and/or where it may be appropriate to permit individuals to contest the accuracy of the information collected, *e.g.* public source materials, or those supplied by third parties, the applicable exemption may be waived, either partially or totally, by the Bureau. Exemptions from the particular subsections are justified for the following reasons:

(1) From subsection (e)(1) to the extent that the Bureau may collect information that may be relevant to the law enforcement operations of other agencies. In the interests of overall, effective law enforcement, such information should be retained and made available to those agencies with relevant responsibilities.

(2) From subsection (e)(5) because in the collection and maintenance of information for law enforcement purposes, it is impossible to determine in advance what information is accurate, relevant, timely and complete. Data which may seem unrelated, irrelevant or incomplete when collected may take on added meaning or significance as an investigation progresses or with the passage of time, and could be relevant to future law enforcement decisions. In addition, amendment of the records may interfere with law enforcement

operations and would impose an impossible administrative burden by requiring that law enforcement information be continuously reexamined, even where the information may have been collected from the record subject or other criminal justice agencies. The restrictions of subsection (e)(5) would restrict and delay trained correctional managers from timely exercising their judgment in managing the inmate population and providing for the safety and security of the prisons and the public.

(n) The following system of records is exempted pursuant to 5 U.S.C. 552a(j) from subsections (e)(1) and (e)(5): Bureau of Prisons Inmate Physical and Mental Health Records System, (Justice/BOP–007).

(o) These exemptions apply only to the extent that information in this system is subject to exemption pursuant to 5 U.S.C. 552a(j). Where compliance would not appear to interfere with or adversely affect the law enforcement process, and/or where it may be appropriate to permit individuals to contest the accuracy of the information collected, *e.g.* public source materials, or those supplied by third parties, the applicable exemption may be waived, either partially or totally, by the Bureau. Exemptions from the particular subsections are justified for the following reasons:

(1) From subsection (e)(1) to the extent that the Bureau may collect information that may be relevant to the law enforcement operations of other agencies. In the interests of overall, effective law enforcement, such information should be retained and made available to those agencies with relevant responsibilities.

(2) From subsection (e)(5) because in the collection and maintenance of information for law enforcement purposes, it is impossible to determine in advance what information is accurate, relevant, timely and complete. Data which may seem unrelated, irrelevant or incomplete when collected may take on added meaning or significance during the course of an investigation or with the passage of time, and could be relevant to future law enforcement decisions. In addition, because many of these records come from sources outside the Bureau of Prisons, it is administratively impossible for them and the Bureau to ensure compliance with this provision. The restrictions of subsection (e)(5) would restrict and delay trained correctional managers from timely exercising their judgment in managing the inmate population and providing for the health care of the inmates and the safety and security of the prisons and the public.

(p) The following system of records is exempt from 5 U.S.C. 552a (c)(3) and (4), (d)(1)–(4), (e)(2) and (3), (e)(5), and (g):

Inmate Electronic Message Record System (JUSTICE /BOP–013).

(q) These exemptions apply only to the extent that information in this system is subject to exemption pursuant to 5 U.S.C. 552a (j)(2) and/or (k)(2). Where compliance would not appear to interfere with or adversely affect the law enforcement process, and/or where it may be appropriate to permit individuals to contest the accuracy of the information collected, the applicable exemption may be waived, either partially or totally, by the BOP. Exemptions from the particular subsections are justified for the following reasons:

(1) From subsection (c)(3) to the extent that this system of records is exempt from subsection (d), and for such reasons as those cited for subsection (d) in paragraph (q)(3) below.

(2) From subsection (c)(4) to the extent that exemption from subsection (d) makes this exemption inapplicable.

(3) From the access provisions of subsection (d) because exemption from this subsection is essential to prevent access of information by record subjects that may invade third party privacy; frustrate the investigative process; jeopardize the legitimate correctional interests of safety, security and good order to prison facilities; or otherwise compromise, impede, or interfere with BOP or other law enforcement agency activities.

(4) From the amendment provisions of subsection (d) because amendment of the records may interfere with law enforcement operations and would impose an impossible administrative burden by requiring that, in addition to efforts to ensure accuracy so as to withstand possible judicial scrutiny, it would require that law enforcement information be

continuously reexamined, even where the information may have been collected from the record subject. Also, some of these records come from other Federal criminal justice agencies or State, local and foreign jurisdictions, or from Federal and State probation and judicial offices, and it is administratively impossible to ensure that records comply with this provision.

(5) From subsection (e)(2) because the nature of criminal and other investigative activities is such that vital information about an individual can be obtained from other persons who are familiar with such individual and his/her activities. In such investigations it is not feasible to rely solely upon information furnished by the individual concerning his/her own activities since it may result in inaccurate information and compromise ongoing criminal investigations or correctional management decisions.

(6) From subsection (e)(3) because in view of BOP's operational responsibilities, application of this provision to the collection of information is inappropriate. Application of this provision could provide the subject with substantial information which may in fact impede the information gathering process or compromise ongoing criminal investigations or correctional management decisions.

(7) From subsection (e)(5) because in the collection and maintenance of information for law enforcement purposes, it is impossible to determine in advance what information is accurate, relevant, timely and complete. Material which may seem unrelated, irrelevant or incomplete when collected may take on added meaning or significance at a later date or as an investigation progresses. Also, some of these records may come from other Federal, State, local and foreign law enforcement agencies, and from Federal and State probation and judicial offices and it is administratively impossible to ensure that the records comply with this provision. It would also require that law enforcement information be continuously reexamined even where the information may have been collected from the record subject.

(8) From subsection (g) to the extent that this system is exempted from other provisions of the Act.

[Order No. 645–76, 41 FR 12640, Mar. 26, 1976, as amended by Order No. 6–86, 51 FR 15479, Apr. 24, 1986; Order No. 113-96, 61 FR 6316, Feb. 20, 1996; Order No. 114-96, 61 FR 6317, Feb. 20, 1996; Order No. 115-96, 61 FR 6319, Feb. 20, 1996; Order No. 279–2002, 67 FR 51754, Aug. 9, 2002; Order No. 280–2002, 67 FR 51755, Aug. 9, 2002; Order No. 281–2002, 67 FR 51756, Aug. 9, 2002; Order No. 004–2006, 71 FR 8805, Feb. 21, 2006]

§ 16.98 Exemption of the Drug Enforcement Administration (DEA)—limited access.

(a) The following systems of records are exempt from 5 U.S.C. 552a(c)(3) and (d):

(1) Automated Records and Consummated Orders System/Diversion Analysis and Detection System (ARCOS/DADS) (Justice/DEA–003)

(2) Controlled Substances Act Registration Records (Justice/DEA–005)

(3) Registration Status/Investigatory Records (Justice/DEA–012)

(b) These exemptions apply only to the extent that information in these systems is subject to exemption pursuant to 5 U.S.C. 552a(k)(2). Exemptions from the particular subsections are justified for the following reasons:

(1) From subsection (c)(3) because release of the disclosure accounting would enable the subject of an investigation to gain valuable information concerning the nature and scope of the investigation and seriously hamper the regulatory functions of the DEA.

(2) From subsection (d) because access to records contained in these systems may provide the subject of an investigation information that could enable him to avoid compliance with the Drug Abuse Prevention and Control Act of 1970 (Pub. L. 91–513).

(c) Systems of records identified in paragraphs (c)(1) through (c)(7) below are exempted pursuant to the provisions of 5 U.S.C. 552a (j)(2) from subsections (c)(3) and (4); (d)(1), (2). (3) and (4); (e)(1), (2) and (3), (e)(5), (e)(8); and (g) of 5 U.S.C. 552a. In addition, systems of records identified in paragraphs (c)(1), (c)(2), (c)(3), (c)(4), (c)(5), and (c)(6) below are also exempted pursuant to the provisions of 5 U.S.C. 552a

(k)(1) from subsections (c)(3); (d)(1), (2), (3) and (4); and (e)(1):

(1) Air Intelligence Program (Justice/DEA–001)

(2) Clandestine Laboratory Seizure System (CLSS) (Justice/DEA–002)

(3) Investigative Reporting and Filing System (Justice/DEA–008)

(4) Planning and Inspection Division Records (Justice/DEA–010)

(5) Operation Files (Justice/DEA–011)

(6) Security Files (Justice/DEA–013)

(7) System to Retrieve Information from Drug Evidence (STRIDE/Ballistics) (Justice/DEA–014)

(d) Exemptions apply to the following systems of records only to the extent that information in the systems is subject to exemption pursuant to 5 U.S.C. 552a (j)(2), (k)(1), and (k)(2): Air Intelligence Program (Justice/DEA–001); Clandestine Laboratory Seizure System (CLSS) (Justice/DEA–002); Planning and Inspection Division Records (Justice/DEA–010); and Security Files (Justice/DEA–013). Exemptions apply to the Investigative Reporting and Filing System (Justice/DEA–008) only to the extent that information in the system is subject to exemption pursuant to 5 U.S.C. 552a(j) (2) and (k)(1). Exemptions apply to the Operations Files (Justice/DEA–011) only to the extent that information in the system is subject to exemption pursuant to 5 U.S.C. 552a(j)(2) and (k)(2). Exemptions apply to the System to Retrieve Information from Drug Evidence (STRIDE/Ballistics) (Justice/DEA–014) only to the extent that information in the system is subject to exemption pursuant to 5 U.S.C. 552a(j)(2). Exemption from the particular subsections are justified for the following reasons:

(1) From subsection (c)(3) because release of disclosure accounting would provide to the subjects of an investigation significant information concerning the nature of the investigation and thus would present the same impediments to law enforcement as those enumerated in paragraph (d)(3) regarding exemption from subsection (d).

(2) From subsection (c)(4) to the extent that it is not applicable because an exemption is being claimed from subsection (d).

(3) From the access provisions of subsection (d) because access to records in this system of records would present a serious impediment to law enforcement. Specifically, it could inform the record subject of an actual or potential criminal, civil, or regulatory investigation of the existence of that investigation; of the nature and scope of the information and evidence obtained as to his activities; of the identity of confidential sources, witnesses, and law enforcement personnel; and of information that may enable the subject to avoid detection or apprehension. Similarly, it may alert collateral suspects yet unprosecuted in closed cases. It could prevent the successful completion of the investigation; endanger the life, health, or physical safety of confidential sources, witnesses, and law enforcement personnel, and/or lead to the improper influencing of witnesses, the destruction of evidence, or the fabrication of testimony; or it may simply reveal a sensitive investigative technique. In addition, granting access to such information could result in the disclosure of confidential/security-sensitive or other information that would constitute an unwarranted invasion of the personal privacy of third parties. Finally, access to the records could result in the release of properly classified information which would compromise the national defense or disrupt foreign policy. From the amendment provisions of subsection (d) because amendment of the records would interfere with ongoing investigations and law enforcement activities and impose an impossible administrative burden by requiring investigations to be continuously reinvestigated.

(4) From subsection (e)(1) because the application of this provision could impair investigations and interfere with the law enforcement responsibilities of the DEA for the following reasons:

(i) It is not possible to detect relevance or necessity of specific information in the early stages of a civil, criminal or other law enforcement investigation, case, or matter, including investigations during which DEA may obtain properly classified information. Relevance and necessity are questions of judgment and timing, and it is only after the information is evaluated that the relevance and necessity of such information can be established.

(ii) During the DEA's investigative activities DEA may detect the violation of either drug-related or non-drug related laws. In the interests of effective law enforcement, it is necessary that DEA retain all information obtained because it can aid in establishing patterns of activity and provide valuable leads for Federal and other law enforcement agencies or otherwise assist such agencies in discharging their law enforcement responsibilities. Such information may include properly classified information, the retention of which could be in the interests of national defense and/or foreign policy.

(5) From subsection (e)(2) because, in some instances, the application of this provision would present a serious impediment to law enforcement for the following reasons:

(i) The subject of an investigation would be placed on notice as to the existence of an investigation and would therefore be able to avoid detection or apprehension, to improperly influence witnesses, to destroy evidence, or to fabricate testimony.

(ii) In certain circumstances the subject of an investigation cannot be required to provide information to investigators, and information relating to a subject's illegal acts must be obtained from other sources.

(iii) In any investigation it is necessary to obtain evidence from a variety of sources other than the subject of the investigation in order to verify the evidence necessary for successful prosecution.

(6) From subsection (e)(3) because the requirements thereof would constitute a serious impediment to law enforcement in that they could compromise the existence of an actual or potential confidential investigation and/or permit the record subject to speculate on the identity of a potential confidential source, and endanger the life, health or physical safety or either actual or potential confidential informants and witnesses, and of investigators/law enforcement personnel. In addition, the notification requirement of subsection (e)(3) could impede collection of that information from the record subject, making it necessary to collect the information solely from third party sources and thereby inhibiting law enforcement efforts.

(7) From subsection (e)(5) because in the collection of information for law enforcement purposes it is impossible to determine in advance what information is accurate, relevant, timely and complete. With the passage of time, seemingly irrelevant or untimely information may acquire new significance as further investigation brings new details to light and the accuracy of such information can only be determined in a court of law. The restrictions imposed by subsection (e)(5) would restrict the ability of trained investigators and intelligence analysts to exercise their judgment in reporting on investigations and impede the development of criminal intelligence necessary for effective law enforcement.

(8) From subsection (e)(8) because the application of this provision could prematurely reveal an ongoing criminal investigation to the subject of the investigation, and could reveal investigative techniques, procedures, or evidence.

(9) From subsection (g) to the extent that this system is exempt from the access and amendment provisions of subsection (d) pursuant to subsections (j)(2), (k)(1) and (k)(2) of the Privacy Act.

(e) The following systems of records are exempt from 5 U.S.C. 552a (d)(1) and (e)(1):

(1) Grants of Confidentiality Files (GCF) (Justice/DEA–017), and

(2) DEA Applicant Investigations (Justice/DEA–018).

(f) These exemptions apply only to the extent that information in these systems is subject to exception pursuant to 5 U.S.C. 552a(k)(5). Exemptions from the particular subsections are justified for the following reasons:

(1) From subsection (d)(1) because many persons are contacted who, without an assurance of anonymity, refuse to provide information concerning an applicant for a grant of confidentiality with DEA. By permitting access to information which may reveal the identity of the source of that information—after a promise of confidentiality has been given—DEA would breach the promised confidentiality. Ultimately, such breaches would restrict the free

flow of information which is vital to a determination of an applicant's qualifications for a grant.

(2) From subsection (e)(1) because in the collection of information for investigative and evaluation purposes, it is impossible to determine in advance what exact information may be of assistance in determining the qualifications and suitability of a candidate. Information which may appear irrelevant, when combined with other apparently irrelevant information, can on occasion provide a composite picture of an applicant which assists in determining whether a grant of confidentiality is warranted.

[Order No. 88–94, 59 FR 29717, June 9, 1994, as amended by Order No. 127–97, 62 FR 2903, Jan. 21, 1997; Order No. 009–2003, 68 FR 14140, Mar. 24, 2003]

§ 16.99 Exemption of the Immigration and Naturalization Service Systems-limited access.

(a) The following systems of records of the Immigration and Naturalization Service are exempt from 5 U.S.C. 552a (c) (3) and (4), (d), (e) (1), (2) and (3), (e) (4)(G) and (H), (e) (5) and (8), and (g):

(1) The Immigration and Naturalization Service Alien File (A-File) and Central Index System (CIS), JUSTICE/INS–001A.

(2) The Immigration and Naturalization Service Index System, JUSTICE/INS–001 which consists of the following subsystems:

(i) Agency Information Control Record Index.

(ii) Alien Enemy Index.

(iii) Congressional Mail Unit Index.

(iv) Air Detail Office Index.

(v) Anti-smuggling Index (general).

(vi) Anti-smuggling Information Centers Systems for Canadian and Mexican Borders.

(vii) Border Patrol Sectors General Index System.

(viii) Contact Index.

(ix) Criminal, Narcotic, Racketeer and Subversive Indexes.

(x) Enforcement Correspondence Control Index System.

(xi) Document Vendors and Alterers Index.

(xii) Informant Index.

(xiii) Suspect Third Party Index.

(xiv) Examination Correspondence Control Index.

(xv) Extension Training Enrollee Index.

(xvi) Intelligence Index.

(xvii) Naturalization and Citizenship Indexes.

(xviii) Personnel Investigations Unit Indexes.

(xix) Service Look-Out Subsystem.

(xx) White House and Attorney General Correspondence Control Index.

(xxi) Fraudulent Document Center Index.

(xxii) Emergency Reassignment Index.

(xxiii) Alien Documentation, Identification, and Telecommunication (ADIT) System.

The exemptions apply to the extent that information in these subsystems is subject to exemption pursuant to 5 U.S.C. 552a (j)(2) and (k)(2).

(3) The Immigration and Naturalization Service ''National Automated Immigration Lookout System (NAILS) JUSTICE/INS–032.'' The exemptions apply only to the extent that records in the system are subject to exemptions pursuant to 5 U.S.C. 552a(j)(2) and (k)(2).

(b) Exemptions from the particular subsections are justified for the following reasons:

(1) From subsection (c)(3) because the release of the disclosure accounting for disclosure pursuant to the routine uses published for these subsystems would permit the subject of a criminal or civil investigation to obtain valuable information concerning the nature of that investigation and present a serious impediment to law enforcement.

(2) From subsection (c)(4) since an exemption is being claimed for subsection (d), this subsection will not be applicable.

(3) From subsection (d) because access to the records contained in these subsystems would inform the subject of a criminal or civil investigation of the existence of that investigation, provide the subject of the investigation with information that might enable him to avoid detection or apprehension, and present a serious impediment to law enforcement.

(4) From subsection (e)(1) because in the course of criminal or civil investigations, the Immigration and Naturalization Service often obtains information concerning the violation of laws other than those relating to violations over which INS has investigative jurisdiction. In the interests of effective law enforcement, it is necessary that INS retain this information since it can aid in establishing patterns of criminal activity and provide valuable leads for those law enforcement agencies that are charged with enforcing other segments of the criminal law.

(5) From subsection (e)(2) because in a criminal or civil investigation, the requirement that information be collected to the greatest extent possible from the subject individual would present a serious impediment to law enforcement in that the subject of the investigation would be placed on notice of the existence of the investigation and would therefore be able to avoid detection or apprehension.

(6) From subsection (e)(3) because the requirement that individuals supplying information be provided with a form stating the requirements of subsection (e)(3) would constitute a serious impediment to law enforcement in that it could compromise the existence of a confidential investigation, reveal the identity of confidential sources of information and endanger the life or physical safety of confidential informants.

(7) From subsections (e)(4) (G) and (H) because these subsystems of records are exempt from individual access pursuant to subsection (j) of the Privacy Act of 1974.

(8) From subsection (e)(5) because in the collection of information for law enforcement purposes it is impossible to determine in advance what information is accurate, relevant, timely, and complete. With the passage of time, seemingly irrelevant or untimely information may acquire new significance as further investigation brings new details to light and the accuracy of such information can only be determined in a court of law. The restrictions of subsection (e)(5) would restrict the ability of trained investigators and intelligence analysts to exercise their judgment in reporting on investigations and impede the development of criminal intelligence necessary for effective law enforcement.

(9) From subsection (e)(8) because the individual notice requirements of subsection (e)(8) could present a serious impediment to law enforcement as this could interfere with the Immigration and Naturalization Service's ability to issue administrative subpoenas and could reveal investigative techniques and procedures.

(10) From subsection (g) because these subsystems of records are compiled for law enforcement purposes and have been exempted from the access provisions of subsections (d) and (f).

(11) In addition, these systems of records are exempt from subsections (c)(3), (d), (e)(1), (e)(4) (G) and (H) to the extent they are subject to exemption pursuant to 5 U.S.C. 552a(k)(1). To permit access to records classified pursuant to Executive Order would violate the Executive Order protecting classified information.

(c) The Border Patrol Academy Index Subsystem is exempt from 5 U.S.C. 552a (d) and (f).

This exemption applies only to the extent that information in this subsystem is subject to exemption pursuant to 5 U.S.C. 552a(k).

(d) Exemptions for the particular subsections are justified for the following reasons.

(1) From subsection (d) because exemption is claimed only for those testing and examination materials used to determine an individual's qualifications for retention and promotion in the Immigration and Naturalization Service. This is necessary to protect the integrity of testing materials and to insure fair and uniform examinations.

(2) From subsection (f) because the subsystem of records has been exempted from the access provisions of subsection (d).

(e) The Orphan Petitioner Index and Files (Justice/INS–007) system of records is exempt from 5 U.S.C. 552a(d). This exemption applies only to the extent that information in this system is subject to exemption pursuant to 5 U.S.C. 552a(k)(1).

(f) Exemption from paragraph (d) of this section is claimed solely because

of the possibility of receipt of classified information during the course of INS investigation of prospective adoptive parents.

Although it would be rare, prospective adoptive parents may originally be from foreign countries (for example) and information received on them from their native countries may require classification under Executive Order 12356 which safeguards national security information. If such information is relevant to the INS determination with respect to adoption, the information would be kept in the file and would be classified accordingly. Therefore, access could not be granted to the record subject under the Privacy Act without violating E.O. 12356.

(g) The Office of Internal Audit Investigations Index and Records (Justice/INS–002) system of records is exempt under the provisions of 5 U.S.C. 552a(j)(2) from subsections (c)(3) and (4); (d); (e)(1), (2), (3), (5) and (8); and (g), but only to the extent that this system contains records within the scope of subsection (j)(2), and to the extent that records in the system are subject to exemption therefrom. In addition, this system of records is also exempt under the provisions of 5 U.S.C. 552a(k)(2) from subsections (c)(3); (d); and (e)(1), but only to the extent that this system contains records within the scope of subsection (k)(2), and to the extent that records in the system are subject to exemption therefrom.

(h) The following justification apply to the exemptions from particular subsections:

(1) From subsection (c)(3) because the release of the disclosure accounting for disclosure could permit the subject of an actual or potential criminal or civil investigation to obtain valuable information concerning the existence and nature of the investigation, the fact that individuals are subjects of the investigation, and present a serious impediment to law enforcement.

(2) From subsection (c)(4) to the extent that the exemption from subsection (d) is applicable. Subsection (c)(4) will not be applicable to the extent that records in the system are properly withholdable under subsection (d).

(3) From the access and amendment provisions of subsection (d) because access to the records contained in this system of records could inform the subject of a criminal or civil investigation of the existence of that investigation; of the nature and scope of the information and evidence obtained as to their activities; of the identity of confidential sources, witnesses and law enforcement personnel; and of information that may enable the subject to avoid detection or apprehension. Such disclosures would present a serious impediment to effective law enforcement where they prevent the successful completion of the investigation; endanger the physical safety of confidential sources, witnesses, and law enforcement personnel; and/or lead to the improper influencing of witnesses, the destruction of evidence, or the fabrication of testimony. In addition, granting access to these records could result in a disclosure that would constitute an unwarranted invasion of the privacy of third parties. Amendment of the records would interfere with ongoing investigations and law enforcement activities and impose an impossible administrative burden by requiring investigations to be continuously reinvestigated.

(4) From subsection (e)(1) because in the course of criminal or civil investigations, the Immigration and Naturalization Service often obtains information concerning the violation of laws other than those relating to violations over which INS has investigative jurisdiction, in the interests of effective law enforcement, it is necessary that INS retain this information since it can aid in establishing patterns of criminal activity and provide valuable leads for those law enforcement agencies that are charged with enforcing other segments of the criminal law.

(5) From subsection (e)(2) because in a criminal investigation, the requirement that information be collected to the greatest extent possible from the subject individual would present a serious impediment to law enforcement in that the subject of the investigation would be placed on notice of the existence of the investigation and would therefore be able to avoid detection or apprehension.

(6) From subsection (e)(3) because the requirement that individuals supplying information be provided with a form stating the requirements of subsection (e)(3) would constitute a serious impediment of criminal law enforcement in that it could compromise the existence of a confidential investigation, reveal the identify of confidential sources of information and endanger the life or physical safety of confidential informants.

(7) From subsection (e)(5) because in the collection of information for criminal law enforcement purposes it is impossible to determine in advance what information is accurate, relevant, timely, and complete. With the passage of time, seemingly irrelevant or untimely information may acquire new significance as further investigation brings new details to light and the accuracy of such information can only be determined in a court of law. The restrictions of subsection (e)(5) would restrict the ability of trained investigators and intelligence analysts to exercise their judgment in reporting on investigations and impede the development of criminal intelligence necessary for effective law enforcement.

(8) From subsection (e)(8) because the individual notice requirements of subsection (e)(8) could present a serious impediment to criminal law enforcement as this could interfere with the Immigration and Naturalization Service's ability to issue administrative subpoenas and could reveal investigative techniques and procedures.

(9) From subsection (g) for those portions of this system of records that were compiled for criminal law enforcement purposes and which are subject to exemption from the access provisions of subsections (d) pursuant to subsection (j)(2).

(i) The Law Enforcement Support Center Database (LESC) (Justice/INS–023) system of records is exempt under the provisions of 5 U.S.C. 552a(j)(2) from subsections (c) (3) and (4); (d); (e) (1), (2), (3), (5), (8) and (g); but only to the extent that this system contains records within the scope of subsection (j)(2), and to the extent that records in the system are subject to exemption therefrom. In addition, this system of records is also exempt in part under the provisions of 5 U.S.C. 552a(k)(2) from subsections (c)(3); (d); and (e)(1), but only to the extent that this system contains records within the scope of subsection (k)(2), and to the extent that records in the system are subject to exemption therefrom.

(j) The following justifications apply to the exemptions from particular subsections:

(1) From subsection (c)(3) for reasons stated in paragraph (h)(1) of this section.

(2) From subsection (c)(4) for reasons stated in paragraph (h)(2) of this section.

(3) From the access and amendment provisions of subsection (d) because access to the records contained in this system of records could inform the subject of a criminal or civil investigation of the existence of that investigation; of the nature and scope of the information and evidence obtained as to their activities; and of information that may enable the subject to avoid detection or apprehension. Such disclosures would present a serious impediment to effective law enforcement where they prevent the successful completion of the investigation or other law enforcement operation such as deportation or exclusion. In addition, granting access to these records could result in a disclosure that would constitute an unwarranted invasion of the privacy of third parties. Amendment of the records would interfere with ongoing investigations and law enforcement activities and impose an impossible administrative burden by requiring investigations to be continuously reinvestigated.

(4) From subsection (e)(1) for reasons stated in paragraph (h)(4) of this section.

(5) From subsection (e)(2) for reasons stated in paragraph (h)(5) of this section.

(6) From subsection (e)(3) because the requirement that individuals supplying information be provided with a form stating the requirements of subsection (e)(3) would constitute a serious impediment to criminal law enforcement in that it could compromise the existence of a confidential investigation.

(7) From subsection (e)(5) for reasons stated in paragraph (h)(7) of this section.

(8) From subsection (e)(8) for reasons stated in paragraph (h)(8) of this section.

(9) From subsection (g) to the extent that this system is exempt from the access and amendment provisions of subsection (d).

(k) The Attorney/Representative Complaint/Petition File (JUSTICE/INS–022) system of records is exempt under the provisions of 5 U.S.C. 552a (j)(2) from subsections (c)(3) and (4); (d); (e)(1), (2), (3), (5), and (8); and (g); but only to the extent that this system contains records within the scope of subsection (j)(2), and to the extent that records in this system are subject to exemption therefrom. In addition, this system of records is also exempt in part under the provisions of 5 U.S.C. 552a (k)(2) from subsections (c)(3); (d); and (e)(1), but only to the extent that this system contains records within the scope of subsection (k)(2), and to the extent that records in this system are subject to exemption therefrom.

(l) The following justifications apply to the exemptions from particular subsections:

(1) From subsection (c)(3) for reasons stated in paragraph (h)(1) of this section.

(2) From subsection (c)(4) for reasons stated in paragraph (h)(2) of this section.

(3) From the access and amendment provisions of subsection (d) for reasons stated in paragraph (h)(3) of this section.

(4) From subsection (e)(1) for reasons stated in paragraph (h)(4) of this section.

(5) From subsection (e)(2) for reasons stated in paragraph (h)(5) of this section.

(6) From subsection (e)(3) for reasons stated in paragraph (h)(6) of this section.

(7) From subsection (e)(5) for reasons stated in paragraph (h)(7) of this section.

(8) From subsection (e)(8) for reasons stated in paragraph (h)(8) of this section.

(9) From subsection (g) to the extent that the system is exempt from the access and amendment provisions of subsection (d).

(m) The Worksite Enforcement Activity and Records Index (LYNX) (JUSTICE/INS–025) system of records is exempt under the provisions of 5 U.S.C. 552a (j)(2) from subsections (c)(3) and (4); (d); (e)(1), (2), (3), (5), and (8); and (g); but only to the extent that this system contains records within the scope of subsection (j)(2), and to the extent that records in this system are subject to exemption therefrom. In addition, this system of records is also exempt in part under the provisions of 5 U.S.C. 552a(k)(2) from subsections (c)(3); (d); and (e)(1), but only to the extent that this system contains records within the scope of subsection (k)(2), and to the extent that records in this system are subject to exemption therefrom.

(n) The following justifications apply to the exemptions from particular subsections:

(1) From subsection (c)(3) for reasons started in paragraph (h)(1) of this section.

(2) From subsection (c)(4) for reasons stated in paragraph (h)(2) of this section.

(3) From the access and amendment provisions of subsection (d) for reasons sated in paragraph (h)(3) of this section.

(4) From subsection (e)(1) for reasons stated in paragraph (h)(4) of this section.

(5) From subsection (e)(2) for reasons stated in paragraph (h)(5) of this section.

(6) From subsection (e)(3) for reasons stated in paragraph (h)(6) of this section.

(7) From subsection (e)(5) for reasons stated in paragraph (h)(7) of this section.

(8) From subsection (e)(8) for reasons stated in paragraph (h)(8) of this section.

(9) From subsection (g) to the extent that the system is exempt from the access and amendment provisions of subsection (d).

[Order No. 645–76, 41 FR 12640, Mar. 26, 1976, as amended by Order No. 688–77, 42 FR 10001, Feb. 18, 1977; Order No. 6–84, 49 FR 20812, May 17, 1984; Order No. 25–88, 53 FR 41161, Oct. 20, 1988; Order No. 137–97, 62 FR 34169, June 25, 1997; Order No. 142–97, 62 FR 44083, Aug. 19, 1997; Order No. 196–2000, 65 FR 21139, Apr. 20, 2000; Order No. 197–2000, 65 FR 21140, Apr. 20, 2000]

§ 16.100 Exemption of Office of Justice Programs—limited access.

(a) The following system of records is exempt from 5 U.S.C. 552a(d):

(1) The Civil Rights Investigative System (JUSTICE/OJP–008).

This exemption applies only to the extent that information in this system is subject to exemption pursuant to 5 U.S.C. 552a(k)(2).

(b) Exemption from subsection (d) is claimed since access to information in the Civil Rights Investigative System prior to final administrative resolution will deter conciliation and compliance efforts. Consistent with the legislative purpose of the Privacy Act of 1974, decisions to release information from the system will be made on a case-by-case basis and information will be made available where it does not compromise the complaint and compliance process. In addition, where explicit promises of confidentiality must be made to a source during an investigation, disclosure will be limited to the extent that the identity of such confidential sources will not be compromised.

[Order No. 645–76, 41 FR 12640, Mar. 26, 1976, as amended by Order No. 5–78, 43 FR 36439, Aug. 17, 1978; Order No. 43–80, 45 FR 6780, Jan. 30, 1980; Order No. 6–86, 51 FR 15479, Apr. 24, 1986; Order NO. 6–236–2001, 66 FR 35374, July 5, 2001]

§ 16.101 Exemption of U.S. Marshals Service Systems—limited access, as indicated.

(a) The following system of records is exempt from 5 U.S.C. 552(a)(c) (3) and (4), (d), (e) (1), (2) and (3), (e)(4) (G) and (H), (e)(5), (e)(8), (f) and (g):

(1) Warrant Information System (JUSTICE/USM–007).

These exemptions apply only to the extent that information in this system is subject to exemption pursuant to 5 U.S.C. 552a(j)(2).

(b) Exemptions from the particular subsections are justified for the following reasons:

(1) From subsection (c)(3) because the release of disclosure accounting for disclosure made pursuant to subsection (b) of the Act, including those permitted under routine uses published for this system of records would permit a person to determine whether he is the subject of a criminal investigation, and to determine whether a warrant has been issued against him, and therefore present a serious impediment to law enforcement.

(2) From subsection (c)(4) since an exemption is being claimed for subsection (d) of the Act, this section is inapplicable.

(3) From subsection (d) because access to records would inform a person for whom a federal warrant has been issued of the nature and scope of information obtained as to his activities, of the identity of informants, and afford the person sufficient information to enable the subject to avoid apprehension. These factors would present a serious impediment to law enforcement in that they would thwart the warrant process and endanger lives of informants etc.

(4) From subsections (e)(1) and (e)(5) because the requirements of these subsections would present a serious impediment to law enforcement in that it is impossible to determine in advance what information collected during an investigation will be important or crucial to the apprehension of Federal fugitives. In the interest of effective law enforcement, it is appropriate in a thorough investigation to retain seemingly irrelevant, untimely, or inaccurate information which, with the passage of time, would aid in establishing patterns of activity and provide investigative leads toward fugitive apprehension and assist in law enforcement activities of other agencies.

(5) From subsection (e)(2) because the requirement that information be collected to the greatest extent practical from the subject individual would present a serious impediment to law enforcement because the subject of the

investigation or prosecution would be placed on notice as to the existence of the warrant and would therefore be able to avoid detection or apprehension.

(6) From subsection (e)(3) because the requirement that individuals supplying information be provided with a form stating the requirements of subsection (e)(3) would constitute a serious impediment to law enforcement in that it could compromise the existence of a confidential investigation or reveal identity of confidential informants.

(7) From subsections (e)(4) (G) and (H) since an exemption is being claimed for subsections (f) and (d) of the Act, these subsections are inapplicable.

(8) From subsection (e)(8) because the individual notice requirement of this subsection would present a serious impediment to law enforcement in that it would give persons sufficient warning to avoid warrants, subpoena, etc.

(9) From subsection (f) because procedures for notice to an individual pursuant to subsection (f)(1) as to existence of records pertaining to him dealing with warrants must be exempted because such notice to individuals would be detrimental to the successful service of a warrant. Since an exemption is being claimed for subsection (d) of the Act the rules required pursuant to subsections (f) (2) through (5) are inapplicable to this system of records.

(10) From subsection (g) since an exemption is being claimed for subsection (d) and (f) this section is inapplicable and is exempted for the reasons set forth for these subsections.

(c) The following system of records is exempt from 5 U.S.C. 552a (c) (3) and (4), (d), (e) (2) and (3), (e)(4) (G) and (H), (e)(8), (f)(2) and (g):

(1) Witness Security System (JUSTICE/USM–008).

These exemptions apply only to the extent that information in this system is subject to exemption pursuant to 5 U.S.C. 552a(j)(2).

(d) Exemptions from the particular subsections are justified for the following reasons:

(1) From subsection (c)(3) because the release of the disclosure accounting for disclosures made pursuant to subsection (b) of the Act including those permitted under routine uses published for this system of records would hamper the effective functioning of the Witness Security Program which by its very nature requires strict confidentiality vis-a-vis the records.

(2) From subsection (c)(4) for the reason stated in (b)(2) of this section.

(3) From subsection (d) because the U.S. Marshals Service Witness Security Program aids efforts of law enforcement officials to prevent, control or reduce crime. Access to records would present a serious impediment to effective law enforcement through revelation of confidential sources and through disclosure of operating procedures of the program, and through increased exposure of the program to the public.

(4) From subsection (e)(2) because in the Witness Security Program the requirement that information be collected to the greatest extent possible from the subject individual would constitute an impediment to the program, which is sometimes dependent on sources other than the subject witness for verification of information pertaining to the witness.

(5) From subsection (e)(3) for the reason stated in (b)(6) of this section.

(6) From subsection (e)(4) (G) and (H) for the reason stated in (b)(7) of this section.

(7) From subsection (e)(8) for the reason stated in (b)(8) of this section.

(8) From subsection (f)(2) since an exemption is being claimed for subsection (d) of the Act the rules required pursuant to subsection (f) (2) through (5) are inapplicable to this system of records.

(9) From subsection (g) for the reason stated in (b)(10) of this section.

(e) The following system of records is exempt from 5 U.S.C. 552a(c)(3) and (4), (d), (e)(1), (2) and (3), (e)(4)(G) and (H), (e)(5), (e)(8), (f) and (g).

(1) Internal Affairs System (JUSTICE/USM–002)—Limited access. These exemptions apply only to the extent that information in this system is subject to exemption pursuant to 5 U.S.C. 552a(j)(2), (k)(2) or (k)(5). Where compliance would not interfere with or adversely affect the law enforcement process, the USMS may waive the exemptions, either partially or totally.

(f) Exemptions from the particular subsections are justified for the following reasons:

(1) From subsections (c)(3) and (d) to the extent that release of the disclosure accounting may impede or interfere with civil or criminal law enforcement efforts, reveal a source who furnished information to the Government in confidence, and/or result in an unwarranted invasion of the personal privacy of collateral record subjects or other third party individuals.

(2) From subsection (c)(4) for the reason stated in (b)(2) of this section.

(3) From subsection (e)(1) to the extent that it is necessary to retain all information in order not to impede, compromise, or interfere with civil or criminal law enforcement efforts, e.g., where the significance of the information may not be readily determined and/or where such information may provide leads or assistance to Federal and other law agencies in discharging their law enforcement responsibilities.

(4) From subsection (e)(2) because the requirement that information be collected to the greatest extent practicable from the subject individual would present a serious impediment to law enforcement because the subject of the investigation or prosecution would be placed on notice as to the existence of the investigation and would therefore be able to compromise the investigation and avoid detection or apprehension.

(5) From subsection (e)(3) for the reason stated in (b)(6) of this section.

(6) From subsections (e)(4) (G) and (H) for the reason stated in (b)(7) of this section.

(7) From subsection (e)(5) because in the collection of information for law enforcement purposes it is impossible to determine in advance what information is accurate, relevant, timely and complete. With the passage of time, seemingly irrelevant or untimely information may acquire new significance and the accuracy of such information can only be determined in a court of law. The restrictions imposed by subsection (e)(5) would restrict the ability to collect information for law enforcement purposes and interfere with the preparation of a complete investigative report or otherwise impede effective law enforcement.

(8) From subsection (e)(8) because the individual notice requirement of this subsection would present a serious impediment to law enforcement in that the subject of the investigation would be alerted as to the existence of the investigation and therefore be able to compromise the investigation and avoid detection, subpoena, etc.

(9) From subsection (f) because procedures for notice to an individual pursuant to subsection (f)(1) as to the existence of records dealing with investigations of criminal or civil law violations would enable the individual to compromise the investigation and evade detection or apprehension. Since an exemption is being claimed for subsection (d) of the Act, the rules required pursuant to subsections (f)(2) through (f)(5) are not applicable to this system.

(10) From subsection (g) for the reason stated in (b)(10) of this section.

(g) The following system of records is exempt from 5 U.S.C. 552a(c) (3) and (4), (d), (e)(1), (2) and (3), (e)(4) (G) and (H), (e)(5), (e)(8), (f) and (g):

(1) U.S. Marshals Service Threat Analysis Information System (JUSTICE/USM–009).

These exemptions apply only to the extent that information in this system is subject to exemption pursuant to 5 U.S.C. 552a(j)(2).

(h) Exemptions from the particular subsections are justified for the following reasons:

(1) From subsection (c)(3) because to release the disclosure accounting would permit a person to determine whether he or she has been identified as a specific threat to USMS protectees and to determine the need for countermeasures to USMS protective activities and thereby present a serious impediment to law enforcement.

(2) From subsection (c)(4) because it is inapplicable since an exemption is being claimed for subsection (d).

(3) From subsection (d) because to permit access to records would inform a person of the nature and scope of information obtained as to his or her threat-related activities and of the identity of confidential sources, and afford the person sufficient information

to develop countermeasures to thwart protective arrangements and endanger lives of USMS protectees, informants, etc. To permit amendment of the records would interfere with ongoing criminal law enforcement and impose an impossible administrative burden requiring criminal investigations to be continuously reinvestigated.

(4) From subsections (e) (1) and (5) because the collection of investigatory information used to assess the existence, extent and likelihood of a threat situation necessarily includes material from which it is impossible to identify and segregate information which may not be important to the conduct of a thorough assessment. It is often impossible to determine in advance if all information collected is accurate, relevant, timely and complete but, in the interests of developing effective protective measures, it is necessary that the U.S. Marshals Service retain this information in order to establish patterns of activity to aid in accurately assessing threat situations. The restrictions of subsections (e) (1) and (5) would impede the protective responsibilities of the Service and could result in death or serious injury to Marshals Service protectees.

(5) From subsection (e)(2) because to collect information from the subject individual would serve notice that he or she is identified as a specific threat to USMS protectees and would enable the subject individual to develop countermeasures to protective activities and thereby present a serious impediment to law enforcement.

(6) From subsection (e)(3) because to inform individuals as required by this subsection would enable the subject individual to develop countermeasures to USMS protective arrangements or identify confidential sources and thereby present a serious impediment to law enforcement.

(7) From subsections (e)(4) (G) and (H) because they are inapplicable since an exemption is being claimed for subsections (d) and (f) of the Act.

(8) From subsection (e)(8) because to serve notice would give persons sufficient warning to develop countermeasures to protective arrangements and thereby present a serious impediment to law enforcement through compromise of protective procedures, etc.

(9) From subsection (f) because this system of records is exempt from the provisions of subsection (d).

(10) From subsection (g) because it is inapplicable since an exemption is being claimed for subsections (d) and (f).

(i) The following system of records is exempt from 5 U.S.C. 552a(c) (3) and (d):

(1) Judicial Facility Security Index System (JUSTICE/USM–010)

These exemptions apply only to the extent that information in this system is exempt pursuant to 5 U.S.C. 552a(k)(5).

(j) Exemptions from the particular subsections are justified for the following reasons:

(1) From subsection (c)(3) only to the extent that release of the disclosure accounting would reveal the identity of a confidential source.

(2) From subsection (d) only to the extent that access to information would reveal the identity of a confidential source.

(k) The following system of records is exempt from 5 U.S.C. 552a(c) (3) and (4), (d), (e)(1), (2) and (3), (e)(4) (G) and (H), (e)(5), (e)(8), (f) and (g):

(1) U.S. Marshals Service Freedom of Information/Privacy Act (FOIA/PA) Files (JUSTICE/USM–012).

These exemptions apply only to the extent that information in this system is subject to exemption pursuant to 5 U.S.C. 552a (j)(2), (k)(2) and (k)(5).

(l) Because this system contains Department of Justice civil and criminal law enforcement, investigatory records, exemptions from the particular subsections are justified for the following reasons:

(1) From subsection (c)(3) because to release the disclosure accounting would permit the subject of an investigation to obtain valuable information concerning the existence and nature of the investigation and present a serious impediment to law enforcement.

(2) From subsection (c)(4) because that portion of this system which consists of investigatory records compiled for law enforcement purposes is being exempted from the provisions of subsection (d), rendering this provision not applicable.

(3) From subsection (d) because to permit access to investigatory records would reveal the identity of confidential sources and impede ongoing investigative or law enforcement activities by the premature disclosure of information related to those efforts. To permit amendment of the records would interfere with ongoing criminal law enforcement and impose an impossible administrative burden by requiring criminal investigations to be continuously reinvestigated.

(4) From subsections (e) (1) and (5) because it is often impossible to determine in advance if investigatory records contained in this system are accurate, relevant, timely and complete but, in the interests of effective law enforcement, it is necessary to retain this information to aid in establishing patterns of activity and provide leads in criminal investigations.

(5) From subsection (e)(2) because to collect information from the subject individual would serve notice that he or she is the subject of criminal investigative or law enforcement activity and thereby present a serious impediment to law enforcement.

(6) From subsection (e)(3) because to inform individuals as required by this subsection would enable the subject individual to identify confidential sources, reveal the existence of an investigation, and compromise law enforcement efforts.

(7) From subsections (e)(4) (G) and (H) because they are inapplicable since an exemption is being claimed for subsections (d) and (f) for investigatory records contained in this system.

(8) From subsection (e)(8) because to serve notice would give persons sufficient warning to evade law enforcement efforts.

(9) From subsection (f) because investigatory records contained in this system are exempt from the provisions of subsection (d).

(10) From subsection (g) because it is inapplicable since an exemption is being claimed for subsections (d) and (f).

(m) The following system of records is exempt from 5 U.S.C. 552a(c) (3) and (4), (d), (e) (2) and (3), (e)(4) (G) and (H), (e)(8), (f) and (g):

(1) U.S. Marshals Service Administrative Proceedings, Claims and Civil Litigation Files (JUSTICE/USM–013).

These exemptions apply only to the extent that information in this system is subject to exemption pursuant to 5 U.S.C. 552a(j)(2) or (k)(5).

(n) Exemptions from the particular subsections are justified for the following reasons:

(1) From subsection (c)(3) because to release the disclosure accounting for disclosures pursuant to the routine uses published for this system would permit the subject of a criminal or civil case or matter under investigation, or a case or matter in litigation, or under regulatory or administrative review or action, to obtain valuable information concerning the nature of that investigation, case or matter, and present a serious impediment to law enforcement or civil legal activities, or reveal a confidential source.

(2) From subsection (c)(4) because the exemption claimed for subsection (d) will make this section inapplicable.

(3) From subsection (d) because to permit access to records contained in this system would provide information concerning litigation strategy, or case development, and/or reveal the nature of the criminal or civil case or matter under investigation or administrative review, or in litigation, and present a serious impediment to law enforcement or civil legal activities, or reveal a confidential source.

(4) From subsection (e)(2) because effective legal representation, defense, or claim adjudication necessitates collecting information from all individuals having knowledge of the criminal or civil case or matter. To collect information primarily from the subject individual would present a serious impediment to law enforcement or civil legal activities.

(5) From subsection (e)(3) because to inform the individuals as required by this subsection would permit the subject of a criminal or civil matter under investigation or administrative review to compromise that investigation or administrative review and thereby impede law enforcement efforts or civil legal activities.

(6) From subsections (e)(4) (G) and (H) because these provisions are inapplicable since this system is exempt from subsections (d) and (f) of the Act.

(7) From subsection (e)(8) because to serve notice would give persons sufficient warning to compromise a criminal or civil investigation or administrative review and thereby impede law enforcement of civil legal activities.

(8) From subsection (f) because this system of records is exempt from the provisions of subsection (d).

(9) From subsection (g) because it is inapplicable since an exemption is claimed for subsections (d) and (f).

(o) The following system of records is exempt from 5 U.S.C. 552a(c) (3) and (4), (d), (e) (1), (2), (5) and (g):

(1) U.S. Marshals Service Prisoner Transportation System (JUSTICE/USM–003).

These exemptions apply only to the extent that information in this system is subject to exemption pursuant to 5 U.S.C. 552a(j)(2).

(p) Exemptions from the particular subsections are justified for the following reasons:

(1) From subsection (c)(3) where the release of the disclosure accounting for disclosures made pursuant to subsection (b) of the Act would reveal a source who furnished information to the Government in confidence.

(2) From subsection (c)(4) to the extent that the system is exempt from subsection (d).

(3) From subsection (d) because access to records would reveal the names and other information pertaining to prisoners, including sensitive security information such as the identities and locations of confidential sources, *e.g.*, informants and protected witnesses; and disclose access codes, data entry codes and message routing symbols used in law enforcement communications systems to schedule and effect prisoner movements. Thus, such a compromise of law enforcement communications systems would subject law enforcement personnel and other prisoners to harassment and possible danger, and present a serious threat to law enforcement activities. To permit amendment of the records would interfere with ongoing criminal law enforcement and impose an impossible administrative burden by requiring that information affecting the prisoner's security classification be continuously reinvestigated when contested by the prisoner, or by anyone on his behalf.

(4) From subsections (e) (1) and (5) because the security classification of prisoners is based upon information collected during official criminal investigations; and, in the interest of ensuring safe and secure prisoner movements it may be necessary to retain information the relevance, necessity, accuracy, timeliness, and completeness of which cannot be readily established, but which may subsequently prove useful in establishing patterns of criminal activity or avoidance, and thus be essential to assigning an appropriate security classification to the prisoner. The restrictions of subsection (e) (1) and (5) would impede the information collection responsibilities of the USMS, and the lack of all available information could result in death or serious injury to USMS and other law enforcement personnel, prisoners in custody, and members of the public.

(5) From subsection (e)(2) because the requirement to collect information from the subject individual would impede the information collection responsibilities of the USMS in that the USMS is often dependent upon sources other than the subject individual for verification of information pertaining to security risks posed by the individual prisoner.

(6) From subsection (g) to the extent that the system is exempt from subsection (d).

(q) The following system of records is exempt from 5 U.S.C. 552a(c)(3) and (4), (d), (e)(1), (2), (3), (e)(5) and (e)(8) and (g):

(1) U.S. Marshals Service Prisoner Processing and Population Management System (JUSTICE/USM–005).

These exemptions apply only to the extent that information in this system is subject to exemption pursuant to 5 U.S.C. 552a(j)(2).

(r) Exemptions from the particular subsections are justified for the following reasons:

(1) From subsection (c)(3) because to release the disclosure accounting would permit the subject of a criminal proceeding to determine the extent or nature of law enforcement authorities'

knowledge regarding his/her alleged misconduct or criminal activities. The disclosure of such information could alert the subject to devise ways in which to conceal his/her activities and/or prevent law enforcement from learning additional information about his/her activities, or otherwise inhibit law enforcement efforts. In addition, where the individual is the subject of an ongoing or potential inquiry/investigation, such release could reveal the nature thereof prematurely, and may also enable the subject to determine the identity of witnesses and informants. Such disclosure could compromise the ongoing or potential inquiry/investigation, endanger the lives of witnesses and informants, or otherwise impede or thwart law enforcement efforts.

(2) From subsection (c)(4) to the extent that the system is exempt from subsection (d).

(3) From subsection (d) because to permit unlimited access would permit the subject of a criminal proceeding to determine the extent or nature of law enforcement authorities' knowledge regarding his/her alleged misconduct or criminal activities. The disclosure of such information could alert the subject to devise ways in which to conceal his/her activities and/or prevent law enforcement from learning additional information about his/her activities, or otherwise inhibit law enforcement efforts. Disclosure would also allow the subject to obtain sensitive information concerning the existence and nature of security measures and jeopardize the safe and secure transfer of the prisoner, the safety and security of other prisoners, informants and witnesses, law enforcement personnel, and the public. In addition, disclosure may enable the subject to learn prematurely of an ongoing or potential inquiry/investigation, and may also permit him/her to determine the identities of confidential sources, informants, or protected witnesses. Such disclosure could compromise the ongoing or potential inquiry/investigation, endanger the lives of witnesses and informants, or otherwise impede or thwart law enforcement efforts. Disclosure may also constitute an unwarranted invasion of the personal privacy of third parties. Further, disclosure would reveal access codes, data entry codes and message routing symbols used in law enforcement communications systems. Access to such codes and symbols would permit the subject to impede the flow of law enforcement communications and compromise the integrity of law enforcement information, and thus present a serious threat to law enforcement activities. To permit amendment of the records would expose security matters, and would impose an impossible administrative burden by requiring that security precautions, and information pertaining thereto, be continuously reevaluated if contested by the prisoner, or by anyone on his or her behalf. Similarly, to permit amendment could interfere with ongoing or potential inquiries/investigations by requiring that such inquiries/investigations be continuously reinvestigated, or that information collected (the relevance and accuracy of which cannot readily be determined) be subjected to continuous change.

(4) From subsections (e)(1) and (5) because the system may contain investigatory information or information which is derived from information collected during official criminal investigations. In the interest of effective law enforcement and litigation, of securing the prisoner and of protecting the public, it may be necessary to retain information the relevance, necessity, accuracy, timeliness and completeness of which cannot be readily established. Such information may nevertheless provide investigative leads to other Federal or law enforcement agencies, or prove necessary to establish patterns of criminal activity or behavior, and/or prove essential to the safe and secure detention (and movement) of prisoners. Further, the provisions of (e)(1) and (e)(5) would restrict the ability of the USMS in exercising its judgment in reporting information during investigations or during the development of appropriate security measures, and thus present a serious impediment to law enforcement efforts.

(5) From subsection (e)(2) because the requirement to collect information from the subject individual would impede the information collection responsibilities of the USMS which is often dependent upon sources other than the

subject individual for verification of information pertaining to security risks posed by the individual prisoner, to alleged misconduct or criminal activity of the prisoner, or to any matter affecting the safekeeping and disposition of the individual prisoner.

(6) From subsection (e)(3) because to inform individuals as required by this subsection could impede the information gathering process, reveal the existence of an ongoing or potential inquiry/investigation or security procedure, and compromise law enforcement efforts.

(7) From subsection (e)(8) because to serve notice would give persons sufficient warning to compromise an ongoing or potential inquiry/investigation and thereby evade and impede law enforcement and security efforts.

(8) From subsection (g) to the extent that the system is exempt from subsection (d).

(s) The following system of records is exempt from 5 U.S.C. 552a(c) (3) and (4), (d), (e) (1), (2), (3), (e) (5) and (e) (8) and (g):

Joint Automated Booking Stations, Justice/USM–014

(t) These exemptions apply only to the extent that information in the system is subject to exemption pursuant to 5 U.S.C. 552a(j)(2). Where compliance would not interfere with or adversely affect the law enforcement process, the USMS may waive the exemptions, either partially or totally. Exemption from the particular subsections are justified for the following reasons:

(1) From subsections (c)(3) and (d) to the extent that access to records in this system of records may impede or interfere with law enforcement efforts, result in the disclosure of information that would constitute and unwarranted invasion of the personal privacy of collateral record subjects or other third parties, and/or jeopardize the health and/or safety of third parties.

(2) Where access to certain records may be appropriate, exemption from the amendment provisions of subsection (d)(2) in necessary to the extent that the necessary and appropriate justification, together with proof of record inaccuracy, is not provided, and/or to the extent that numerous, frivolous requests to amend could impose an impossible administrative burden by requiring agencies to continuously review booking and arrest data, much of which is collected from the arrestee during the arrest.

(3) From subsection (e)(1) to the extent that it is necessary to retain all information in order not to impede, compromise, or interfere with law enforcement efforts, e.g., where the significance of the information may not be readily determined and/or where such information may provide leads or assistance to Federal and other law enforcement agencies in discharging their law enforcement responsibilities.

(4) From subsection (e)(2) because, in some instances, the application of this provision would present a serious impediment to law enforcement since it may be necessary to obtain and verify information from a variety of sources other than the record subject to ensure safekeeping, security, and effective law enforcement. For example, it may be necessary that medical and psychiatric personnel provide information regarding the subject's behavior, physical health, or mental stability, etc. To ensure proper care while in custody, or it may be necessary to obtain information from a case agent or the court to ensure proper disposition of the subject individual.

(5) From subsection (e)(3) because the requirement that agencies inform each individual whom it asks to supply information of such information as is required by subsection (e)(3) may, in some cases, impede the information gathering process or otherwise interfere with or compromise law enforcement efforts, e.g., the subject may deliberately withhold information, or give erroneous information.

(6) From subsection (e)(5) because in the collection of information for law enforcement purposes it is impossible to determine in advance what information is accurate, relevant, timely and complete. With the passage of time, seemingly irrelevant or untimely information may acquire new significance and the accuracy of such information can only be determined in a court of law. The restrictions imposed by subsection (e)(5) would restrict the ability

to collect information for law enforcement purposes and may prevent the eventual development of the necessary criminal intelligence or otherwise impede effective law enforcement.

(7) From subsection (e)(8) to the extent that such notice may impede, interfere with, or otherwise compromise law enforcement and security efforts.

(8) From subsection (g) to the extent that this system is exempt from the access and amendment provisions of subsection (d).

(u) Consistent with the legislative purpose of the Privacy Act of 1974, the United States Marshals Service will grant access to nonexempt material in records which are maintained by the Service. Disclosure will be governed by the Department's Privacy Regulations, but will be limited to the extent that the identity of confidential sources will not be compromised; subjects of an investigation of an actual or potential criminal, civil or regulatory violation will not be alerted to the investigation; the physical safety of witnesses, informants and law enforcement personnel will not be endangered; the privacy of third parties will not be violated; and that the disclosure would not otherwise impede effective law enforcement. Whenever possible, information of the above nature will be deleted from the requested documents and the balance made available. The controlling principle behind this limited access is to allow disclosures except those indicated above. The decisions to release information from these systems will be made on a case-by-case basis.

[Order No. 645–76, 41 FR 12640, Mar. 26, 1976, as amended by Order No. 8–83, 48 FR 19024, Apr. 27, 1983; Order No. 10–86, 51 FR 20275, June 4, 1986; Order No. 11–86, 51 FR 20277, June 4, 1986; Order No. 61–92, 57 FR 3284, Jan. 29, 1992; Order No. 66–92, 57 FR 20654, May 14, 1992; Order No. 105–95, 60 FR 30467, June 9, 1995; Order No. 212–2001, 66 FR 6470, Jan. 22, 2001]

§ 16.102 Exemption of Drug Enforcement Administration and Immigration and Naturalization Service Joint System of Records.

(a) The following system of records is exempted pursuant to provisions of 5 U.S.C. 552a(j)(2) from subsections (c) (3) and (4), (d), (e) (1), (2) and (3), (e)(4) (G), (H), and (I), (e)(5) and (8), (f), (g), and (h) of 5 U.S.C. 552a; in addition the following system of records is exempted pursuant to the provisions of 5 U.S.C. 552 (k)(1) and (k)(2) from subsections (c)(3), (d), (e)(1), (e)(4) (G), (H), and (I), and (f) of 5 U.S.C. 552a.

(1) Automated Intelligence Record System (Pathfinder), JUSTICE/DEA-INS-111.

These exemptions apply to the extent that information in those systems is subject to exemption pursuant to 5 U.S.C. 552a (j)(2), (k)(1) and (k)(2).

(b) The system of records listed under paragraph (a) of this section is exempted, for the reasons set forth from the following provisions of 5 U.S.C. 552a:

(1)(c)(3). The release of the disclosure accounting for disclosures made pursuant to subsection (b) of the Act, including those permitted under the routine uses published for these systems of records, would permit the subject of an investigation of an actual or potential criminal, civil, or regulatory violation to determine whether he is the subject of investigation, or to obtain valuable information concerning the nature of that investigation, and the information obtained, or the identity of witnesses and informants and would therefore present a serious impediment to law enforcement. In addition, disclosure of the accounting would amount to notice to the individual of the existence of a record; such notice requirement under subsection (f)(1) is specifically exempted for these systems of records.

(2)(c)(4). Since an exemption is being claimed for subsection (d) of the Act (Access to Records) this subsection is inapplicable to the extent that these systems of records are exempted from subsection (d).

(3)(d). Access to the records contained in these systems would inform the subject of an investigation of an actual or potential criminal, civil, or regulatory violation of the existence of that investigation, or the nature and scope of the information and evidence obtained as to his activities, of the identity of witnesses and informants, or would provide information that could enable the subject to avoid detection or apprehension. These factors would present a serious impediment to effective law enforcement because they

could prevent the successful completion of the investigation, endanger the physical safety of witnesses or informants, and lead to the improper influencing of witnesses, the destruction of evidence, or the fabrication of testimony.

(4)(e)(1). The notices of these systems of records published in the FEDERAL REGISTER set forth the basic statutory or related authority for maintenance of this system. However, in the course of criminal or other law enforcement investigations, cases, and matters, the Immigration and Naturalization Service or the Drug Enforcement Administration will occasionally obtain information concerning actual or potential violations of law that are not strictly within its statutory or other authority or may compile information in the course of an investigation which may not be relevant to a specific prosecution. In the interests of effective law enforcement, it is necessary to retain such information in these systems of records since it can aid in establishing patterns of criminal activity and can provide valuable leads for federal and other law enforcement agencies.

(5)(e)(2). In a criminal investigation or prosecution, the requirement that information be collected to the greatest extent practicable from the subject individual would present a serious impediment to law enforcement because the subject of the investigation or prosecution would be placed on notice as to the existence of the investigation and would therefore be able to avoid detection or apprehension, to influence witnesses improperly, to destroy evidence, or to fabricate testimony.

(6)(e)(3). The requirement that individuals supplying information be provided with a form stating the requirements of subsection (e)(3) would constitute a serious impediment to law enforcement in that it could compromise the existence of a confidential investigation or reveal the identity of witnesses or confidential informants.

(7)(e)(4) (G) and (H). Since an exemption is being claimed for subsections (f) (Agency Rules) and (d) (Access to Records) of the Act these subsections are inapplicable to the extent that these systems of records are exempted from subsections (f) and (d).

(8)(e)(4)(I). The categories of sources of the records in these systems have been published in the FEDERAL REGISTER in broad generic terms in the belief that this is all that subsection (e)(4)(I) of the Act requires. In the event, however, that this subsection should be interpreted to require more detail as to the identity of sources of the records in these systems, exemption from this provision is necessary in order to protect the confidentiality of the sources of criminal and other law enforcement information. Such exemption is further necessary to protect the privacy and physical safety of witnesses and informants.

(9)(e)(5). In the collection of information for criminal law enforcement purposes it is impossible to determine in advance what information is accurate, relevant, timely, and complete. With the passage of time, seemingly irrelevant or untimely information may acquire new significance as further investigation brings new details to light and the accuracy of such information can often only be determined in a court of law. The restrictions of subsection (e)(5) would restrict the ability of trained investigators, intelligence analysts, and government attorneys in exercising their judgment in reporting on information and investigations and impede the development of criminal or other intelligence necessary for effective law enforcement.

(10)(e)(8). The individual notice requirements of subsection (e)(8) could present a serious impediment to law enforcement as this could interfere with the ability to issue warrants or subpoenas and could reveal investigative techniques, procedures, or evidence.

(11)(f). Procedures for notice to an individual pursuant to subsection (f)(1) as to the existence of records pertaining to him dealing with an actual or potential criminal, civil, or regulatory investigation or prosecution must be exempted because such notice to an individual would be detrimental to the successful conduct and/or completion of an investigation or prosecution pending or future. In addition, mere notice of the fact of an investigation could inform

the subject or others that their activities are under or may become the subject of an investigation and could enable the subjects to avoid detection or apprehension, to influence witnesses improperly, to destroy evidence, or to fabricate testimony.

Since an exemption is being claimed for subsection (d) of the Act (Access to Records) the rules required pursuant to subsections (f) (2) through (5) are inapplicable to these systems of records to the extent that these systems of records are exempted from subsection (d).

(12)(g). Since an exemption is being claimed for subsections (d) (Access to Records) and (f) (Agency Rules) this section is inapplicable, and is exempted for the reasons set forth for those subsections, to the extent that these systems of records are exempted from subsections (d) and (f).

(13)(h). Since an exemption is being claimed for subsection (d) (Access to Records) and (f) (Agency Rules) this section is inapplicable, and is exempted for the reasons set forth for those subsections, to the extent that these systems of records are exempted from subsections (d) and (f).

(14) In addition, exemption is claimed for these systems of records from compliance with the following provisions of the Privacy Act of 1974 (5 U.S.C. 552a) pursuant to the provisions of 5 U.S.C. 552a(k)(1): subsections (c)(3), (d), (e)(1), (e)(4) (G), (H), and (I), and (f) to the extent that the records contained in these systems are specifically authorized to be kept secret in the interests of national defense and foreign policy.

[Order No. 742–77, 42 FR 40907, Aug. 12, 1977]

§ 16.103 Exemption of the INTERPOL-United States National Central Bureau (INTERPOL-USNCB) System.

(a) The following system of records is exempt from 5 U.S.C. 552a(c) (3) and (4), (d), (e) (1), (2), and (3), (e)(4) (G) and (H), (e)(5) and (8), (f) and (g):

(1) The INTERPOL-United States National Central Bureau (INTERPOL-USNCB) (Department of Justice) INTERPOL-USNCB Records System (JUSTICE/INTERPOL–001).

This exemption applies only to the extent that information in this system is subject to exemption pursuant to 5 U.S.C. 552a (j)(2), (k)(2), and (k)(5).

(b) Exemptions from the particular subsections are justified for the following reasons:

(1) From subsection (c)(3) because the release of accounting disclosures would place the subject of an investigation on notice that he is under investigation and provide him with significant information concerning the nature of the investigation, thus resulting in a serious impediment to law enforcement.

(2) From subsections (c)(4), (d), (e)(4) (G), and (H), (f) and (g) because these provisions concern individual access to records and such access might compromise ongoing investigations reveal investigatory techniques and confidential informants, and invade the privacy of private citizens who provide information in connection with a particular investigation.

(3) From subsection (e)(1) because information received in the course of an international criminal investigation may involve a violation of state or local law, and it is beneficial to maintain this information to provide investigative leads to state and local law enforcement agencies.

(4) From subsection (e)(2) because collecting information from the subject of criminal investigations would thwart the investigation by placing the subject on notice.

(5) From subsection (e)(3) because supplying an individual with a statement of the intended use of the requested information could compromise the existence of a confidential investigation, and may inhibit cooperation.

(6) From subsection (e)(5) because the vast majority of these records come from local criminal justice agencies and it is administratively impossible to ensure that the records comply with this provision. Submitting agencies are, however, urged on a continuing basis to ensure that their records are accurate and include all dispositions.

(7) From subsection (e)(8) because the notice requirements of this provision could present a serious impediment to law enforcement by revealing investigative techniques, procedures, and

the existence of confidential investigations.

[Order No. 8–82, 47 FR 44255, Oct. 7, 1982, as amended by Order No. 6–86, 51 FR 15479, Apr. 24, 1986]

§ 16.104 Exemption of Office of Special Counsel—Waco System.

(a) The following system of records is exempted from subsections (c)(3) and (4); (d)(1), (2), (3), and (4); (e)(1), (2), (3), (5) and (8); and (g) of the Privacy Act pursuant to 5 U.S.C. 552a(j) and (k): CaseLink Document Database for Office of Special Counsel—Waco, JUSTICE/OSCW–001. These exemptions apply only to the extent that information in a record is subject to exemption pursuant to 5 U.S.C. 552a(j) and (k).

(b) Only that portion of this system which consists of criminal or civil investigatory information is exempted for the reasons set forth from the following subsections:

(1) *Subsection (c)(3)*. To provide the subject of a criminal or civil matter or case under investigation with an accounting of disclosures of records concerning him or her would inform that individual of the existence, nature, or scope of that investigation and thereby seriously impede law enforcement efforts by permitting the record subject and other persons to whom he might disclose the records to avoid criminal penalties and civil remedies.

(2) *Subsection (c)(4)*. This subsection is inapplicable to the extent that an exemption is being claimed for subsection (d).

(3) *Subsection (d)(1)*. Disclosure of investigatory information could interfere with the investigation, reveal the identity of confidential sources, and result in an unwarranted invasion of the privacy of others.

(4) *Subsection (d)(2)*. Amendment of the records would interfere with ongoing criminal law enforcement proceedings and impose an impossible administrative burden by requiring criminal investigations to be continuously reinvestigated.

(5) *Subsections (d)(3) and (4)*. These subsections are inapplicable to the extent exemption is claimed from (d)(1) and (2).

(6) *Subsections (e)(1) and (5)*. It is often impossible to determine in advance if investigatory records contained in this system are accurate, relevant, timely and complete; but, in the interests of effective law enforcement, it is necessary to retain this information to aid in establishing patterns of activity and provide leads in criminal investigations.

(7) *Subsection (e)(2)*. To collect information from the subject individual would serve notice that he or she is the subject of criminal investigative or law enforcement activity and thereby present a serious impediment to law enforcement.

(8) *Subsection (e)(3)*. To inform individuals as required by this subsection would reveal the existence of an investigation and compromise law enforcement efforts.

(9) *Subsection (e)(8)*. To serve notice would give persons sufficient warning to evade law enforcement efforts.

(10) *Subsection (g)*. This subsection is inapplicable to the extent that the system is exempt from other specific subsections of the Privacy Act.

[Order No. 208–2000, 65 FR 75160, Dec. 1, 2000]

§ 16.105 Exemption of Foreign Terrorist Tracking Task Force System.

(a) The following system of records is exempt from 5 U.S.C. 552a, subsections (c)(3), (d)(1), (2), (3) and (4), and (e)(1) and (4)(I): Flight Training Candidates File System (JUSTICE/FTTTF–001). This exemption applies only to the extent that information is subject to exemption pursuant to 5 U.S.C. 552a(k)(1).

(b) Exemption from the particular subsections is justified for the following reasons:

(1) From subsection (c)(3) because making available to a record subject the accounting of disclosures could reveal information that is classified in the interest of national security.

(2) From subsection (d)(1), (2), (3) and (4) because access to and amendment of certain portions of records within the system would tend to reveal or compromise information classified in the interest of national security.

(3) From subsection (e)(1) because it is often impossible to determine in advance if information obtained will be relevant for the purposes of conducting the risk analysis for flight training candidates.

(4) From subsection (e)(4)(I) to the extent that this subsection is interpreted to require more detail regarding the record sources in this system than have been published in the FEDERAL REGISTER. Should the subsection be so interpreted, exemption from this provision is necessary because greater specificity concerning the sources of these records could compromise national security.

[Order No. 278–2002, 67 FR 51756, Aug. 9, 2002]

§ 16.106 Exemption of the Bureau of Alcohol, Tobacco, Firearms, and Explosives (ATF)—Limited Access.

(a) The following system of records is exempt from 5 U.S.C. 552a(c)(3) and (4), (d)(1), (2), (3) and (4), (e)(1), (2), and (3), (e)(4)(G), (H) and (I), (e)(5) and (8), (f) and (g).

(1) Criminal Investigation Report System (JUSTICE/ATF–003).

(2) These exemptions apply only to the extent that information in this system is subject to exemption pursuant to 5 U.S.C. 552a(j)(2). Where compliance would not appear to interfere with or adversely affect the overall law enforcement process, ATF may waive the applicable exemption.

(b) Exemptions from the particular subsections are justified for the following reasons:

(1) From subsection (c)(3) because making available to a record subject the accounting of disclosures from records concerning him/her would reveal investigative interest not only of ATF, but also of the recipient agency. This would permit the record subject to take measures to impede the investigation, e.g., destroy evidence, intimidate potential witnesses or flee the area to avoid the thrust of the investigation.

(2) From subsection (c)(4) because an exemption being claimed for subsection (d) makes this subsection inapplicable.

(3) From subsections (d)(1), (e)(4)(G) and (H), (f) and (g) because these provisions concern individual access to investigative records, compliance with which could compromise sensitive information, interfere with the overall law enforcement process by revealing a pending sensitive investigation, possibly identify a confidential source or disclose information, including actual or potential tax information, which would constitute an unwarranted invasion of another individual's personal privacy, reveal a sensitive investigative technique, or constitute a potential danger to the health or safety of law enforcement personnel.

(4) From subsection (d)(2) because, due to the nature of the information collected and the essential length of time it is maintained, to require ATF to amend information thought to be incorrect, irrelevant or untimely, would create an impossible administrative and investigative burden by forcing the agency to continuously retrograde its investigations attempting to resolve questions of accuracy, etc.

(5) From subsections (d)(3) and (4) because these subsections are inapplicable to the extent exemption is claimed from (d)(1) and (2).

(6) From subsection (e)(1) because: (i) It is not possible in all instances to determine relevancy or necessity of specific information in the early stages of a criminal or other investigation.

(ii) Relevance and necessity are questions of judgment and timing; what appears relevant and necessary when collected ultimately may be deemed unnecessary. It is only after the information is assessed that its relevancy and necessity in a specific investigative activity can be established.

(iii) In any investigation, ATF might obtain information concerning violations of law not under its jurisdiction, but in the interest of effective law enforcement, dissemination will be made to the agency charged with enforcing such law.

(iv) In interviewing individuals or obtaining other forms of evidence during an investigation, information could be obtained, the nature of which would leave in doubt its relevancy and necessity. Such information, however, could be relevant to another investigation or to an investigative activity under the jurisdiction of another agency.

(7) From subsection (e)(2) because the nature of criminal and other investigative activities is such that vital information about an individual can only be obtained from other persons who are familiar with such individual and his/her activities. In such investigations it is not feasible to rely upon information

furnished by the individual concerning his own activities.

(8) From subsection (e)(3) because disclosure would provide the subject with substantial information that could impede or compromise the investigation. The individual could seriously interfere with undercover investigative activities and could take steps to evade the investigation or flee a specific area.

(9) From subsection (e)(4)(I) because the categories of sources of the records in these systems have been published in the FEDERAL REGISTER in broad generic terms in the belief that this is all that subsection (e)(4)(I) of the Act requires. In the event, however, that this subsection should be interpreted to require more detail as to the identity of sources of the records in these systems, exemption from this provision is necessary in order to protect the confidentiality of the sources of criminal and other law enforcement information. Such exemption is further necessary to protect the privacy and physical safety of witnesses and informants.

(10) From subsection (e)(5) because in the collection of information for law enforcement purposes it is impossible to determine in advance what information is accurate, relevant, timely and complete. With the passage of time, seemingly irrelevant or untimely information may acquire new significance as further investigation brings new details to light. The restrictions imposed by subsection (e)(5) would restrict the ability of trained investigators and intelligence analysts to exercise their judgment in reporting on investigations and impede the development of criminal intelligence necessary for effective law enforcement.

(11) From subsection (e)(8) because the notice requirements of this provision could seriously interfere with a law enforcement activity by alerting the subject of a criminal or other investigation of existing investigative interest.

(c) The following system of records is exempt from 5 U.S.C. 552a(c)(3), (d)(1), (2), (3) and (4), (e)(1), (e)(4)(G), (H) and (I), and (f).

(1) Internal Security Record System (JUSTICE/ATF–006).

(2) These exemptions apply only to the extent that information in this system is subject to exemption pursuant to 5 U.S.C. 552a(k)(2) and (k)(5). Where compliance would not appear to interfere with or adversely affect the overall law enforcement process, ATF may waive the applicable exemption.

(d) Exemptions from the particular subsections are justified for the following reasons:

(1) From subsection (c)(3) because to provide the subject with an accounting of disclosures of records in this system could inform that individual of the existence, nature, or scope of an actual or potential law enforcement investigation, and thereby seriously impede law enforcement efforts by permitting the record subject and other persons to whom he might disclose the records to avoid criminal penalties, civil remedies, or other measures.

(2) From subsection (d)(1) because disclosure of records in the system could reveal the identity of confidential sources and result in an unwarranted invasion of the privacy of others. Disclosure may also reveal information relating to actual or potential criminal investigations. Such breaches would restrict the free flow of information which is vital to the law enforcement process and the determination of an applicant's qualifications.

(3) From subsection (d)(2) because, due to the nature of the information collected and the essential length of time it is maintained, to require ATF to amend information thought to be incorrect, irrelevant or untimely, would create an impossible administrative and investigative burden by forcing the agency to continuously retrograde its investigations attempting to resolve questions of accuracy, etc.

(4) From subsections (d)(3) and (4) because these subsections are inapplicable to the extent exemption is claimed from (d)(1) and (2).

(5) From subsection (e)(1) because it is often impossible to determine in advance if investigative records contained in this system are accurate, relevant, timely, complete, or of some assistance to either effective law enforcement investigations, or to the determination of the qualifications and suitability of an applicant. It also is necessary to retain this information to aid in establishing patterns of activity and provide investigative leads. Information that may appear irrelevant, when combined with other apparently irrelevant information, can on occasion provide a composite picture of a subject or an applicant which assists the law enforcement process and the determination of an applicant's suitability qualifications.

(6) From subsection (e)(4)(G) and (H), and (f) because these provisions concern individual access to investigative records, compliance with which could compromise sensitive information, interfere with the overall law enforcement or qualification process by revealing a pending sensitive investigation, possibly identify a confidential source or disclose information which would constitute an unwarranted invasion of another individual's personal privacy, reveal a sensitive investigative technique, or constitute a potential danger to the health or safety of law enforcement personnel. In addition, disclosure of information collected pursuant to an employment suitability or similar inquiry could reveal the identity of a source who provided information under an express promise of confidentiality, or could compromise the objectivity or fairness of a testing or examination process.

(7) From subsection (e)(4)(I) because the categories of sources of the records in these systems have been published in the FEDERAL REGISTER in broad generic terms in the belief that this is all that subsection (e)(4)(I) of the Act requires. In the event, however, that this subsection should be interpreted to require more detail as to the identity of sources of the records in these systems, exemption from this provision is necessary in order to protect the confidentiality of the sources of criminal and other law enforcement information. Such exemption is further necessary to protect the privacy and physical safety of witnesses and informants.

(e) The following system of records is exempt from 5 U.S.C. 552a(c)(3), (d)(1), (2), (3) and (4), (e)(1), (e)(4)(G), (H) and (I), and (f).

(1) Personnel Record System (JUSTICE/ATF–007).

(2) These exemptions apply only to the extent that information in this system is subject to exemption pursuant to 5 U.S.C. 552a(k)(5). Where compliance would not appear to interfere with or adversely affect the overall law enforcement process, ATF may waive the applicable exemption.

(f) Exemptions from the particular subsections are justified for the following reasons:

(1) From subsection (c)(3) because making available to a record subject the accounting of disclosures from records concerning him/her would reveal the existence, nature, or scope of an actual or potential personnel action. This would permit the record subject to take measures to hamper or impede such actions.

(2) From subsections (d)(1), (e)(4)(G) and (H), and (f) because many persons are contacted who, without an assurance of anonymity, refuse to provide information concerning a candidate for a position with ATF. Access could reveal the identity of the source of the information and constitute a breach of the promise of confidentiality on the part of ATF. Such breaches ultimately would restrict the free flow of information vital to a determination of a candidate's qualifications and suitability.

(3) From subsection (d)(2) because, due to the nature of the information collected and the essential length of time it is maintained, to require ATF to amend information thought to be incorrect, irrelevant or untimely, would create an impossible administrative and investigative burden by forcing the agency to continuously retrograde its investigations attempting to resolve questions of accuracy, etc.

(4) From subsections (d)(3) and (4) because these subsections are inapplicable to the extent exemption is claimed from (d)(1) and (2).

(5) From subsection (e)(1) because:

(i) It is not possible in all instances to determine relevancy or necessity of

specific information in the early stages of a personnel-related action.

(ii) Relevance and necessity are questions of judgment and timing; what appears relevant and necessary when collected ultimately may be deemed unnecessary. It is only after the information is assessed that its relevancy and necessity in a specific investigative activity can be established.

(iii) ATF might obtain information concerning violations of law not under its jurisdiction, but in the interest of effective law enforcement, dissemination will be made to the agency charged with enforcing such law.

(iv) In interviewing individuals or obtaining other forms of evidence during an investigation, information could be obtained, the nature of which would leave in doubt its relevancy and necessity. Such information, however, could be relevant to another investigation or to an investigative activity under the jurisdiction of another agency.

(6) From subsection (e)(4)(I) because the categories of sources of the records in these systems have been published in the FEDERAL REGISTER in broad generic terms in the belief that this is all that subsection (e)(4)(I) of the Act requires. In the event, however, that this subsection should be interpreted to require more detail as to the identity of sources of the records in these systems, exemption from this provision is necessary in order to protect the confidentiality of the sources of criminal and other law enforcement information. Such exemption is further necessary to protect the privacy and physical safety of witnesses and informants.

(g) The following systems of records are exempt from 5 U.S.C. 552a(c)(3), (d)(1), (2), (3) and (4), (e)(1), (e)(4)(G), (H) and (I), and (f).

(1) Regulatory Enforcement Record System (JUSTICE/ATF–008).

(2) Technical and Scientific Services Record System (JUSTICE/ATF–009).

(3) These exemptions apply only to the extent that information in this system is subject to exemption pursuant to 5 U.S.C. 552a(k)(2). Where compliance would not appear to interfere with or adversely affect the overall law enforcement process, ATF may waive the applicable exemption.

(h) Exemptions from the particular subsections are justified for the following reasons:

(1) From subsection (c)(3) because making available to a record subject the accounting of disclosures from records concerning him/her would reveal investigative interest, whether civil, criminal or regulatory, not only of ATF, but also of the recipient agency. This would permit the record subject to take measures to impede the investigation, *e.g.*, destroy evidence, intimidate potential witnesses or flee the area to avoid the thrust of the investigation thus seriously hampering the regulatory and law enforcement functions of ATF.

(2) From subsections (d)(1), (e)(4)(G) and (H), and (f) because these provisions concern individual access to investigative and compliance records, disclosure of which could compromise sensitive information, interfere with the overall law enforcement and regulatory process by revealing a pending sensitive investigation, possibly identify a confidential source or disclose information, including actual or potential tax information, which would constitute an unwarranted invasion of another individual's personal privacy, reveal a sensitive investigative technique, or constitute a potential danger to the health or safety of law enforcement personnel.

(3) From subsection (d)(2) because, due to the nature of the information collected and the essential length of time it is maintained, to require ATF to amend information thought to be incorrect, irrelevant or untimely, would create an impossible administrative and investigative burden by forcing the agency to continuously retrograde its investigations and compliance actions attempting to resolve questions of accuracy, etc.

(4) From subsections (d)(3) and (4) because these subsections are inapplicable to the extent exemption is claimed from (d)(1) and (2).

(5) From subsection (e)(1) because:

(i) It is not possible in all instances to determine relevancy or necessity of specific information in the early stages of a criminal, civil, regulatory, or other investigation.

(ii) Relevance and necessity are questions of judgment and timing; what appears relevant and necessary when collected ultimately may be deemed unnecessary. It is only after the information is assessed that its relevancy and necessity in a specific investigative or regulatory activity can be established.

(iii) In any investigation or compliance action ATF might obtain information concerning violations of law not under its jurisdiction, but in the interest of effective law enforcement, dissemination will be made to the agency charged with enforcing such law.

(iv) In interviewing individuals or obtaining other forms of evidence during an investigation, information could be obtained, the nature of which would leave in doubt its relevancy and necessity. Such information, however, could be relevant to another investigation or compliance action or to an investigative activity under the jurisdiction of another agency.

(6) From subsection (e)(4)(I) because the categories of sources of the records in these systems have been published in the FEDERAL REGISTER in broad generic terms in the belief that this is all that subsection (e)(4)(I) of the Act requires. In the event, however, that this subsection should be interpreted to require more detail as to the identity of sources of the records in these systems, exemption from this provision is necessary in order to protect the confidentiality of the sources of criminal, regulatory, and other law enforcement information. Such exemption is further necessary to protect the privacy and physical safety of witnesses and informants.

[Order No. 002–2003, 68 FR 3393, Jan. 24, 2003]

§ 16.130 Exemption of Department of Justice Systems: Correspondence Management Systems for the Department of Justice (DOJ-003); Freedom of Information Act, Privacy Act and Mandatory Declassification Review Requests and Administrative Appeals for the Department of Justice (DOJ-004).

(a) The following Department of Justice systems of records are exempted from subsections (c)(3) and (4); (d)(1), (2), (3) and (4); (e)(1), (2), (3), (5) and (8); and (g) of the Privacy Act pursuant to 5 U.S.C. 552a(j) and (k). These exemptions apply only to the extent that information in a record is subject to exemption pursuant to 5 U.S.C. 552a(j) and (k).

(1) Correspondence Management Systems (CMS) for the Department of Justice (DOJ), DOJ/003.

(2) Freedom of Information Act, Privacy Act, and Mandatory Declassification Review Requests and Administrative Appeals for the Department of Justice (DOJ), DOJ/004.

(b) These systems are exempted for the reasons set forth from the following subsections:

(1) *Subsection (c)(3)*. To provide the subject of a criminal, civil, or counterintelligence matter or case under investigation with an accounting of disclosures of records concerning him or her could inform that individual of the existence, nature, or scope of that investigation, and thereby seriously impede law enforcement or counterintelligence efforts by permitting the record subject and other persons to whom he might disclose the records to avoid criminal penalties, civil remedies, or counterintelligence measures.

(2) *Subsection (c)(4)*. This subsection is inapplicable to the extent that an exemption is being claimed for subsection (d).

(3) *Subsection (d)(1)*. Disclosure of investigatory information could interfere with the investigation, reveal the identity of confidential sources, and result in an unwarranted invasion of the privacy of others. Disclosure of classified national security information would cause damage to the national security of the United States.

(4) *Subsection (d)(2)*. Amendment of the records would interfere with ongoing criminal or civil law enforcement proceedings and impose an impossible administrative burden by requiring investigations to be continuously reinvestigated.

(5) *Subsections (d)(3) and (4)*. These subsections are inapplicable to the extent exemption is claimed from (d)(1) and (2).

(6) *Subsection (e)(1)*. It is often impossible to determine in advance if investigatory records contained in this system are accurate, relevant, timely and

complete, but, in the interests of effective law enforcement and counterintelligence, it is necessary to retain this information to aid in establishing patterns of activity and provide investigative leads.

(7) *Subsection (e)(2)*. To collect information from the subject individual could serve notice that he or she is the subject of a criminal investigation and thereby present a serious impediment to such investigations.

(8) *Subsection (e)(3)*. To inform individuals as required by this subsection could reveal the existence of a criminal investigation and compromise investigative efforts.

(9) *Subsection (e)(5)*. It is often impossible to determine in advance if investigatory records contained in this system are accurate, relevant, timely and complete, but, in the interests of effective law enforcement, it is necessary to retain this information to aid in establishing patterns of activity and provide investigative leads.

(10) *Subsection (e)(8)*. To serve notice could give persons sufficient warning to evade investigative efforts.

(11) *Subsection (g)*. This subsection is inapplicable to the extent that the system is exempt from other specific subsections of the Privacy Act.

[Order No. 241–2001, 66 FR 41445, Aug. 8, 2001; 66 FR 43308, Aug. 17, 2001]

§ 16.131 Exemption of Department of Justice (DOJ)/Nationwide Joint Automated Booking System (JABS), DOJ-005.

(a) The following system of records is exempt from 5 U.S.C. 552a(c)(3) and (4), (d), (e)(1), (2), (3), (4)(G) and (H), (e)(5) and (8), (f) and (g): Nationwide Joint Automated Booking System, Justice/DOJ-005. These exemptions apply only to the extent that information in the system is subject to exemption pursuant to 5 U.S.C. 552a(j)(2) and (k)(2). Where compliance would not interfere with or adversely affect the law enforcement process, the DOJ may waive the exemptions, either partially or totally.

(b) Exemption from the particular subsections are justified for the following reasons:

(1) From subsections (c)(3), (c)(4), and (d) to the extent that access to records in this system of records may impede or interfere with law enforcement efforts, result in the disclosure of information that would constitute an unwarranted invasion of the personal privacy of collateral record subjects or other third parties, and/or jeopardize the health and/or safety of third parties.

(2) From subsection (e)(1) to the extent that it is necessary to retain all information in order not to impede, compromise, or interfere with law enforcement efforts, e.g., where the significance of the information may not be readily determined and/or where such information may provide leads or assistance to Federal and other law enforcement agencies in discharging their law enforcement responsibilities.

(3) From subsection (e)(2) because, in some instances, the application of this provision would present a serious impediment to law enforcement since it may be necessary to obtain and verify information from a variety to sources other than the record subject to ensure safekeeping, security, and effective law enforcement. For example, it maybe necessary that medical and psychiatric personnel provide information regarding the subject's behavior, physical. health, or mental stability, etc. to ensure proper care while in custody, or it may be necessary to obtain information from a case agent or the court to ensure proper disposition of the subject individual.

(4) From subsection (e)(3) because the requirement that agencies inform each individual whom it asks to supply information of such information as is required by subsection (e)(3) may, in some cases, impede the information gathering process or otherwise interfere with or compromise law enforcement efforts, e.g., the subject may deliberately withhold information, or give erroneous information.

(5) From subsection (4)(G) and(H) because the application of these provisions would present a serious impediment to law enforcement efforts.

(6) From subsection (e)(5) because in the collection of information for law enforcement purposes it is impossible to determine in advance what information is accurate, relevant, timely and complete. With the passage of time,

seemingly irrelevant or untimely information may acquire new significance and the accuracy of such information can only be determined in a court of law. The restrictions imposed by subsection (e)(5) would restrict the ability to collect information for law enforcement purposes, may prevent the eventual development of the necessary criminal intelligence, or otherwise impede law enforcement or delay trained law enforcement personnel from timely exercising their judgment in managing the arrestee.

(7) From subsection (e)(8) to the extent that such notice may impede, interfere with, or otherwise compromise law enforcement and security efforts.

(8) From subsection 5 U.S.C. 552a(f) to the extent that compliance with the requirement for procedures providing individual access to records, compliance could impede, compromise, or interfere with law enforcement efforts.

(9) From subsection (g) to the extent that this system is exempt from the access and amendment provisions of subsection (d).

[Order No. 242–2001, 66 FR 41445, Aug. 8, 2001; 66 FR 44308, Aug. 17, 2001]

§ 16.132 Exemption of Department of Justice System—Personnel Investigation and Security Clearance Records for the Department of Justice (DOJ), DOJ-006.

(a) The following Department of Justice system of records is exempted from subsections (c)(3) and (4); (d)(1), (2), (3) and (4); (e)(1),(2),(3),(5) and (8); and (g) of the Privacy Act pursuant to 5 U.S.C. 552a(j) and (k): Personnel Investigation and Security Clearance Records for the Department of Justice (DOJ), DOJ-006. These exemptions apply only to the extent that information in a record is subject to exemption pursuant to 5 U.S.C. 552a(j) and (k).

(b) Exemption from the particular subsections is justified for the following reasons:

(1) *Subsection (c)(3).* To provide the subject with an accounting of disclosures of records in this system could inform that individual of the existence, nature, or scope of an actual or potential law enforcement or counterintelligence investigation, and thereby seriously impede law enforcement or counterintelligence efforts by permitting the record subject and other persons to whom he might disclose the records to avoid criminal penalties, civil remedies, or counterintelligence measures.

(2) *Subsection (c)(4).* This subsection is inapplicable to the extent that an exemption is being claimed for subsection (d).

(3) *Subsection (d)(1).* Disclosure of records in the system could reveal the identity of confidential sources and result in an unwarranted invasion of the privacy of others. Disclosure may also reveal information relating to actual or potential criminal investigations. Disclosure of classified national security information would cause damage to the national security of the United States.

(4) *Subsection (d)(2).* Amendment of the records could interfere with ongoing criminal or civil law enforcement proceedings and impose an impossible administrative burden by requiring investigations to be continuously reinvestigated.

(5) *Subsections (d)(3) and (4).* These subsections are inapplicable to the extent exemption is claimed from (d)(1) and (2).

(6) *Subsection (e)(1).* It is often impossible to determine in advance if investigatory records contained in this system are accurate, relevant, timely and complete, but, in the interests of effective law enforcement and counterintelligence, it is necessary to retain this information to aid in establishing patterns of activity and provide investigative leads.

(7) *Subsection (e)(2).* To collect information from the subject individual could serve notice that he or she is the subject of a criminal investigation and thereby present a serious impediment to such investigations.

(8) *Subsection (e)(3).* To inform individuals as required by this subsection could reveal the existence of a criminal investigation and compromise investigative efforts.

(9) *Subsection (e)(5).* It is often impossible to determine in advance if investigatory records contained in this system are accurate, relevant, timely and complete, but, in the interests of effective law enforcement, it is necessary to

retain this information to aid in establishing patterns of activity and provide investigative leads.

(10) *Subsection (e)(8)*. To serve notice could give persons sufficient warning to evade investigative efforts.

(11) *Subsection (g)*. This subsection is inapplicable to the extent that the system is exempt from other specific subsections of the Privacy Act.

[Order No. 297–2002, 67 FR 70163, Nov. 21, 2002]

§ 16.133 Exemption of Department of Justice Regional Data Exchange System (RDEX), DOJ–012.

(a) The Department of Justice Regional Data Exchange System (RDEX), DOJ–012, is exempted from subsections (c)(3) and (4); (d)(1), (2), (3), and (4); (e)(1), (2), (3), (5), and (8); and (g) of the Privacy Act pursuant to 5 U.S.C. 552a(j)(2). These exemptions apply only to the extent that information in a record is subject to exemption pursuant to 5 U.S.C. 552a(j)(2).

(b) This system is exempted from the following subsections for the reasons set forth below:

(1) From subsection (c)(3) because making available to a record subject the accounting of disclosures of criminal law enforcement records concerning him or her could inform that individual of the existence, nature, or scope of an investigation, or could otherwise seriously impede law enforcement efforts.

(2) From subsection (c)(4) because this system is exempt from subsections (d)(1), (2), (3), and (4).

(3) From subsection (d)(1) because disclosure of criminal law enforcement information could interfere with an investigation, reveal the identity of confidential sources, and result in an unwarranted invasion of the privacy of others.

(4) From subsection (d)(2) because amendment of the records would interfere with ongoing criminal law enforcement proceedings and impose an impossible administrative burden by requiring investigations to be continuously reinvestigated.

(5) From subsections (d)(3) and (4) because these subsections are inapplicable to the extent that exemption is claimed from subsections (d)(1) and (2).

(6) From subsection (e)(1) because it is often impossible to determine in advance if criminal law enforcement records contained in this system are relevant and necessary, but, in the interests of effective law enforcement, it is necessary to retain this information to aid in establishing patterns of activity and provide investigative leads.

(7) From subsection (e)(2) because collecting information from the subject individual could serve notice that he or she is the subject of a criminal law enforcement matter and thereby present a serious impediment to law enforcement efforts. Further, because of the nature of criminal law enforcement matters, vital information about an individual frequently can be obtained only from other persons who are familiar with the individual and his or her activities and it often is not practicable to rely on information provided directly by the individual.

(8) From subsection (e)(3) because informing individuals as required by this subsection could reveal the existence of a criminal law enforcement matter and compromise criminal law enforcement efforts.

(9) From subsection (e)(5) because it is often impossible to determine in advance if criminal law enforcement records contained in this system are accurate, relevant, timely, and complete, but, in the interests of effective law enforcement, it is necessary to retain this information to aid in establishing patterns of activity and obtaining investigative leads.

(10) From subsection (e)(8) because serving notice could give persons sufficient warning to evade criminal law enforcement efforts.

(11) From subsection (g) to the extent that this system is exempt from other specific subsections of the Privacy Act.

[Order No. 007–2005, 70 FR 49870, Aug. 25, 2005]

Subpart F—Public Observation of Parole Commission Meetings

SOURCE: 42 FR 14713, Mar. 16, 1977, unless otherwise noted.

§ 16.200 Definitions.

As used in this part:

(a) The term *Commission* means the U.S. Parole Commision and any subdivision thereof authorized to act on its behalf.

(b) The term *meeting* refers to the deliberations of at least the number of Commissioners required to take action on behalf of the Commission where such deliberations determine or result in the joint conduct or disposition of official Commission business.

(c) Specifically included in the term *meeting* are;

(1) Meetings of the Commission required to be held by 18 U.S.C. 4203(a);

(2) Special meetings of the Commission called pursuant to 18 U.S.C. 4204(a)(1);

(3) Meetings of the National Commissioners in original jurisdiction cases pursuant to 28 CFR 2.17(a);

(4) Meetings of the entire Commission to determine original jurisdiction appeal cases pursuant to 28 CFR 2.27; and

(5) Meetings of the National Appeals Board pursuant to 28 CFR 2.26.

(6) Meetings of the Commission to conduct a hearing on the record in conjunction with applications for certificates of exemption under section 504(a) of the Labor-Management Reporting and Disclosure Act of 1959, and section 411 of the Employee Retirement Income Security Act of 1974 (28 CFR 4.1–17 and 28 CFR 4a.1–17).[1]

(d) Specifically excluded from the term *meeting* are:

(1) Determination made through independent voting of the Commissioners without the joint deliberation of the number of Commissioners required to take such action, pursuant to § 16.201;

(2) Original jurisdiction cases determined by sequential vote pursuant to 28 CFR 2.17;

(3) Cases determined by sequential vote pursuant to 28 CFR 2.24 and 2.25;

(4) National Appeals Board cases determined by sequential vote pursuant to 28 CFR 2.26;

(5) Meetings of special committees of Commissioners not constituting a quorum of the Commission, which may be established by the Chairman to report and make recommendations to the Commission or the Chairman on any matter.

(6) Determinations required or permitted by these regulations to open or close a meeting, or to withhold or disclose documents or information pertaining to a meeting.

(e) All other terms used in this part shall be deemed to have the same meaning as identical terms used in chapter I, part 2 of this title.

[42 FR 14713, Mar. 16, 1977, as amended at 43 FR 4978, Feb. 7, 1978]

§ 16.201 Voting by the Commissioners without joint deliberation.

(a) Whenever the Commission's Chairman so directs, any matter which (1) does not appear to require joint deliberation among the members of the Commission, or (2) by reason of its urgency, cannot be scheduled for consideration at a Commission meeting, may be disposed of by presentation of the matter separately to each of the members of the Commission. After consideration of the matter each Commission member shall report his vote to the Chairman.

(b) Whenever any member of the Commission so requests, any matter presented to the Commissioners for disposition pursuant to paragraph (a) of this section shall be withdrawn and scheduled instead for consideration at a Commission meeting.

(c) The provisions of § 16.206(a) of these rules shall apply in the case of any Commission determination made pursuant to this section.

§ 16.202 Open meetings.

(a) Every portion of every meeting of the Commission shall be open to public observation unless closed to the public pursuant to the provisions of § 16.203 (Formal Procedure) or § 16.205 (Informal Procedure).

(b) The attendance of any member of the public is conditioned upon the orderly demeanor of such person during the conduct of Commission business. The public shall be permitted to observe and to take notes, but unless prior permission is granted by the Commission, shall not be permitted to record or photograph by means of any mechanical or electronic device any

[1] Part 4a was removed at 44 FR 6890, Feb. 2, 1979.

portion of meetings which are open to the public.

(c) The Commission shall be responsible for arranging a suitable site for each open Commission meeting so that ample seating, visibility, and acoustics are provided to the public and ample security measures are employed for the protection of Commissioners and Staff. The Commission shall be responsible for recording or developing the minutes of Commission meetings.

(d) Public notice of open meetings shall be given as prescribed in § 16.204(a), and a record of votes kept pursuant to § 16.206(a).

§ 16.203 Closed meetings—Formal procedure.

(a) The Commission, by majority vote, may close to public observation any meeting or portion thereof, and withhold from the public announcement concerning such meeting any information, if public observation or the furnishing of such information is likely to:

(1) Disclose matters:

(i) Specifically authorized under criteria established by an executive order to be kept secret in the interests of national defense or foreign policy and

(ii) In fact properly classified pursuant to such executive order;

(2) Relate solely to the internal personnel rules and practices of the Commission or any agency of the Government of the United States;

(3) Disclose matters specifically exempted from disclosure by statute (other than 5 U.S.C. 552, or the Federal Rules of Criminal Procedure): *Provided,* That such statute or rule (i) requires that the matters be withheld in such a manner as to leave no discretion on the issue, or (ii) establishes particular criteria for withholding or refers to particular types of matters to be withheld, including exempted material under the Privacy Act of 1974 or the Commission's Alternate Means of Access under the Privacy Act of 1974, as set forth at 28 CFR 16.85;

(4) Disclose a trade secret or commercial or financial information obtained from any person, corporation, business, labor or pension organization, which is privileged or obtained upon a promise of confidentiality, including information concerning the financial condition or funding of labor or pension organizations, or the financial condition of any individual, in conjunction with applications for exemption under 29 U.S.C. 504 and 1111, and information concerning income, assets and liabilities of inmates, and persons on supervision;

(5) Involve accusing any person of a crime or formally censuring any person;

(6) Disclose information of a personal nature, where disclosure would constitute a clearly unwarranted invasion of personal privacy;

(7) Disclose an investigatory record compiled for law enforcement purposes, or information derived from such a record, which describes the criminal history or associations of any person under the Commission's jurisdiction or which describes the involvement of any person in the commission of a crime, but only to the extent that the production of such records or information would:

(i) Interfere with enforcement proceedings;

(ii) Deprive a person of a right to a fair trail or an impartial adjudication;

(iii) Constitute an unwarranted invasion of personal privacy;

(iv) Disclose the identity of a confidential source and, in the case of a record compiled by a criminal law enforcement authority in the course of a criminal investigation, or an agency conducting a lawful national security intelligence investigation, confidential information furnished only by the confidential source;

(v) Disclose investigative techniques and procedures, or

(vi) Endanger the life or physical safety of law enforcement personnel;

(8) Disclose information, the premature disclosure of which would be likely to significantly frustrate implementation of proposed Commission action except where

(i) The Commission has already publicly disclosed the content or nature of its proposed action or

(ii) The Commission is required by law to make such disclosure on its own initiative prior to taking final Commission action on such proposal;

(9) Specifically concern the Commission's issuance of subpoena or participation in a civil action or proceeding; or

(10) Specifically concern the initiation, conduct, or disposition of a particular case of formal adjudication pursuant to the procedures in 5 U.S.C. 554, or of any case involving a determination on the record after opportunity for a hearing. Included under the above terms are:

(i) Record review hearings following opportunity for an in-person hearing pursuant to the procedures of 28 CFR 4.1 through 4.17 and 28 CFR 4a.1 through 4a.17[1] (governing applications for certificates of exemption under the Labor-Management Reporting and Disclosure Act of 1959 and the Employee Retirement Income Security Act of 1974), and

(ii) The initiation, conduct, or disposition by the Commission of any matter pursuant to the procedures of 28 CFR 2.1 through 2.58 (parole, release, supervision, and recommitment of prisoners, youth offenders, and juvenile delinquents).

(b) *Public interest provision.* Notwithstanding the exemptions at paragraphs (a)(1) through (a)(10) of this section, the Commission may conduct a meeting or portion of a meeting in public when the Commission determines, in its discretion, that the public interest in an open meeting clearly outweighs the need for confidentiality.

(c) *Nonpublic matter in announcements.* The Commission may delete from any announcement or notice required in these regulations information the disclosure of which would be likely to have any of the consequences described in paragraphs (a)(1) through (a)(10) of this section, including the name of any individual considered by the Commission in any case of formal or informal adjudication.

(d) *Voting and certification.* (1) A separate recorded vote of the Commission shall be taken with respect to each meeting or portion thereof which is proposed to be closed, and with respect to any information which is proposed to be withheld pursuant to this section. Voting by proxy shall not be permitted. In the alternative, the Commission may, by a single majority vote, close to public observation a series of meetings, or portion(s) thereof or withhold information concerning such series of meetings, provided that:

(i) Each meeting in such series involves the same particular matters, and

(ii) Each meeting is scheduled to be held no more than thirty days after the initial meeting in the series.

(2) Upon the request of any Commissioner, the Commission shall make a determination as to closure pursuant to this subsection if any person whose interests may be directly affected by a portion of a meeting requests the Commission to close such portion or portions to the public observation for any of the grounds specified in paragraph (a) (5), (6) or (7) of this section.

(3) The determination to close any meeting to public observation pursuant to this section shall be made at least one week prior to the meeting or the first of a series of meetings as the case may be. If a majority of the Commissioners determines by recorded vote that agency business requires the meeting to take place at any earlier date, the closure determination and announcement thereof shall be made at the earliest practicable time. Within one day of any vote taken on whether to close a meeting under this section, the Commission shall make available to the public a written record reflecting the vote of each Commissioner on the question, including a full written explanation of its action in closing the meeting, portion(s) thereof, or series of meetings, together with a list of all persons expected to attend the meeting(s) or portion(s) thereof and their affiliation, subject to the provisions of paragraph (c) of this section.

(4) For every meeting or series of meetings closed pursuant to this section, the General Counsel of the Parole Commission shall publicly certify that, in Counsel's opinion, the meeting may be closed to the public and shall state each relevant exemptive provision.

§ 16.204 Public notice.

(a) *Requirements.* Every open meeting and meeting closed pursuant to § 16.203

[1] Part 4a was removed at 44 FR 6890, Feb. 2, 1979.

shall be preceded by a public announcement posted before the main entrance to the Chairman's Office at the Commission's headquarters, 5550 Friendship Boulevard, Chevy Chase, Maryland 20815–7286, and, in the case of a meeting held elsewhere, in a prominent place at the location in which the meeting will be held. Such announcement shall be transmitted to the FEDERAL REGISTER for publication and, in addition, may be issued through the Department of Justice, Office of Public Affairs, as a press release, or by such other means as the Commission shall deem reasonable and appropriate. The announcement shall furnish:

(1) A brief description of the subject matter to be discussed;

(2) The date, place, and approximate time of the meeting;

(3) Whether the meeting will be open or closed to public observation; and

(4) The name and telephone number of the official designated to respond to requests for information concerning the meeting. See § 16.205(d) for the notice requirement applicable to meetings closed pursuant to that section.

(b) *Time of notice.* The announcement required by this section shall be released to the public at least one week prior to the meeting announced therein except where a majority of the members of the Commission determines by a recorded vote that Commission business requires earlier consideration. In the event of such a determination, the announcement shall be made at the earliest practicable time.

(c) *Amendments to notice.* The time or place of a meeting may be changed following the announcement only if the Commission publicly announces such change at the earliest practicable time. The subject matter of a meeting, or determination of the Commission to open or close a meeting, or portion of a meeting, to the public may be changed following the announcement only if:

(1) A majority of the entire membership of the Commission determines by a recorded vote that Commission business so requires and that no earlier announcement of the change was possible, and

(2) The Commission publicly announces such change and the vote of each member upon such change at the earliest practicable time: *Provided,* That individual items which have been announced for Commission consideration at a closed meeting may be deleted without notice.

[42 FR 14713, Mar. 16, 1977 as amended by Order No. 960–81, 46 FR 52357, Oct. 27, 1981]

§ 16.205 Closed meetings—Informal procedures.

(a) *Finding.* Based upon a review of the meetings of the U.S. Parole Commission since the effective date of the Parole Commission and Reorganization Act (May 14, 1976), the regulations issued pursuant thereto (28 CFR part 2) the experience of the U.S. Board of Parole, and the regulations pertaining to the Commission's authority under 29 U.S.C. 504 and 29 U.S.C. 1111 (28 CFR parts 4 and 4a), the Commission finds that the majority of its meetings may properly be closed to the public pursuant to 5 U.S.C. 552 (d)(4) and (c)(10). The major part of normal Commission business lies in the adjudication of individual parole cases, all of which proceedings commence with an initial parole or revocation hearing and are determined on the record thereof.

Original jurisdiction cases are decided at bi-monthly meetings of the National Commissioners (28 CFR 2.17) and by the entire Commission in conjunction with each business meeting of the Commission (held at least quarterly) (28 CFR 2.27).

The National Appeals Board normally decides cases by sequential vote on a daily basis, but may meet from time to time for joint deliberations. In the period from October, 1975 through September, 1976, the National Appeals Board made 2,072 Appellate decisions.

Finally, over the last two years the Commission determined eleven cases under the Labor and Pension Acts, which are proceedings pursuant to 5 U.S.C. 554. The only meetings of the Commission not of an adjudicative nature involving the most sensitive inquiry into the personal background and behavior of the individual concerned, or involving sensitive financial information concerning the parties before the Commission, are the normal business meetings of the Commission, which are held at least quarterly.

(b) *Meetings to which applicable.* The following types of meetings may be closed in the event that a majority of the Commissioners present at the meeting, and authorized to act on behalf of the Commission, votes by recorded vote at the beginning of each meeting or portion thereof, to close the meeting or portions thereof:

(1) Original jurisdiction initial and appellate case deliberations conducted pursuant to 28 CFR 2.17 and 2.27;

(2) National Appeals Board deliberations pursuant to 28 CFR 2.26;

(3) Meetings of the Commission to conduct a hearing on the record regarding applications for certificates of exemption pursuant to the Labor-Management Reporting and Disclosure Act of 1959, 29 U.S.C. 504, and the Employee Retirement Income Security Act of 1974, 29 U.S.C. 1111 (28 CFR 4.1–17 and 29 CFR 4a.1–17).[1]

(c) *Written record of action to close meeting.* In the case of a meeting or portion of a meeting closed pursuant to this section, the Commission shall make available to the public as soon as practicable:

(1) A written record reflecting the vote of each member of the Commission to close the meeting; and

(2) A certification by the Commission's General Counsel to the effect that in Counsel's opinion, the meeting may be closed to the public, which certification shall state each relevant exemptive provision.

(d) *Public notice.* In the case of meetings closed pursuant to this section the Commission shall make a public announcement of the subject matter to be considered, and the date, place, and time of the meeting. The announcement described herein shall be released to the public at the earliest practicable time.

§ 16.206 Transcripts, minutes, and miscellaneous documents concerning Commission meetings.

(a) In the case of any Commission meeting, whether open or closed, the Commission shall maintain and make available for public inspection a record of the final vote of each member on rules, statements of policy, and interpretations adopted by it: 18 U.S.C. 4203(d).

(b) The Commission shall maintain a complete transcript or electronic recording adequate to record fully the proceedings of each meeting, or portion of a meeting, closed to the public pursuant to § 16.203. In the case of a meeting, or portion of a meeting, closed to the public pursuant to § 16.205 of these regulations, the Commission may maintain either the transcript or recording described above, or a set of minutes unless a recording is required by title 18 U.S.C. 4208(f). The minutes required by this section shall fully and clearly describe all matters discussed and shall provide a full and accurate summary of any actions taken, and the reasons therefor, including a description of each of the views expressed on any item and the record of any rollcall vote (reflecting the vote of each Commissioner on the question). All documents considered in connection with any action shall be identified in such minutes.

(c) The Commission shall retain a copy of every certification executed by the General Counsel's Office pursuant to these regulations, together with a statement from the presiding officer of the meeting, or portion of a meeting to which the certification applies, setting forth the time and place of the meeting, and the persons present.

(d) Nothing herein shall affect any other provision in Commission procedures or regulations requiring the preparation and maintenance of a record of all official actions of the Commission.

§ 16.207 Public access to nonexempt transcripts and minutes of closed Commission meetings—Documents used at meetings—Record retention.

(a) *Public access to records.* Within a reasonable time after any closed meeting, the Commission shall make available to the public, in the Commission's Public Reading Room located at 5550 Friendship Boulevard, Chevy Chase, Maryland 20815–7286, the transcript, electronic recording, or minutes of the discussion of any item on the agenda, or of any item of the testimony of any witness received at such meeting, maintained hereunder, except for such

[1] Part 4a was removed at 44 FR 6890, Feb. 2, 1979.

item or items of such discussion or testimony which contain information exempt under any provision of the Government in the Sunshine Act (Pub. L. 94–409), or of any amendment thereto. Copies of nonexempt transcripts, or minutes, or a transcription of such recording disclosing the identity of each speaker, shall be furnished to any person at the actual cost of duplication or transcription.

(b) Access to documents identified or discussed in any Commission meeting, open or closed, shall be governed by Department of Justice regulations at this part 16, subparts C and D. The Commission reserves the right to invoke statutory exemptions to disclosure of such documents under 5 U.S.C. 552 and 552a, and applicable regulations. The exemptions provided in 5 U.S.C. 552b(c) shall apply to any request made pursuant to 5 U.S.C. 552 or 552a to copy and inspect any transcripts, recordings or minutes prepared or maintained pursuant hereto.

(c) *Retention of records.* The Commission shall maintain a complete verbatim copy of the transcript, or a complete copy of the minutes, or a complete electronic recording of each meeting, or portion of a meeting, closed to the public, for a period of at least two years after such meeting, or until one year after the conclusion of any Commission proceeding with respect to which the meeting or portion thereof was held, whichever occurs later.

[42 FR 14713, Mar. 16, 1977, as amended by Order No. 960–81, 46 FR 52357, Oct. 27, 1981]

§ 16.208 Annual report.

The Commission shall report annually to Congress regarding its compliance with Sunshine Act requirements, including a tabulation of the total number of meetings open to the public, the total number of meetings closed to the public, the reasons for closing such meetings, and a description of any litigation brought against the Commission under this section, including any costs assessed against the Commission in such litigation and whether or not paid.

Subpart G—Access to Documents by Former Employees of the Department

SOURCE: Order No. 2333–2000, 65 FR 68892, Nov. 15, 2000, unless otherwise noted.

§ 16.300 Access to documents for the purpose of responding to an official inquiry.

(a) To the extent permitted by law, former employees of the Department shall be given access to documents that they originated, reviewed, or signed while employees of the Department, for the purpose of responding to an official inquiry by a federal, state, or local government entity or professional licensing authority. Documents include memoranda, drafts, reports, notes, written communications, and documents stored electronically that are in the possession of the Department. Access ordinarily will be provided on government premises.

(b) Requests for access to documents under this section must be submitted in writing to the head of the component where the employee worked when originating, reviewing, or signing the documents. If the employee requesting access was the Attorney General, Deputy Attorney General, or Associate Attorney General, the request may be granted by the Assistant Attorney General for Administration. This authority may not be delegated below the level of principal deputy component head.

(c) The written request should describe with specificity the documents to which access is sought (including time periods wherever possible), the reason for which access is sought (including the timing of the official inquiry involved), and any intended disclosure of any of the information contained in the documents.

(d) The requester must agree in writing to safeguard the information from unauthorized disclosure and not to further disclose the information, by any means of communication, or to make copies, without the permission of the Department. Determinations regarding any further disclosure of information or removal of copies shall be made in accordance with applicable standards and procedures.

§ 16.301 Limitations.

(a) The Department may deny or limit access under this subpart where providing the requested access would be unduly burdensome.

(b) Access under this subpart to classified information is governed by Executive Order 12958 and 28 CFR 17.46. Requests for access to classified information must be submitted to (or will be referred to) the Department Security Officer and may be granted by the Department Security Officer in consultation with the appropriate component head.

(c) Nothing in this subpart shall be construed to supplant the operation of other applicable prohibitions against disclosure.

(d) This subpart is not intended to, does not, and may not be relied upon to, create any right or benefit, substantive or procedural, enforcecable at law by a party against the United States.

APPENDIX I TO PART 16—COMPONENTS OF THE DEPARTMENT OF JUSTICE

Unless a separate address is listed below, the address for each component is: [component name], U.S. Department of Justice, 950 Pennsylvania Avenue, NW., Washington, DC 20530–0001. For all components marked by an asterisk, FOIA and Privacy Act requests should be sent to the Office of Information and Privacy, U.S. Department of Justice, Flag Bldg., Suite 570, Washington, DC 20530–0001. The components are:

A

Office of the Attorney General*
Office of the Deputy Attorney General*
Office of the Associate Attorney General*
Office of the Solicitor General

B

Office of Information and Privacy*
Office of the Inspector General
Office of the Intelligence Policy and Review
Office of Intergovernmental Affairs*
Office of Investigative Agency Policies
Office of Legal Counsel
Office of Legislative Affairs*
Office of Policy Development*
Office of Professional Responsibility
Office of Public Affairs*

C

Antitrust Division, U.S. Department of Justice, LPB Bldg., Suite 200, Washington, DC 20530–0001
Civil Division, U.S. Department of Justice, 901E Bldg., Room 808, Washington, DC 20530–0001
Civil Rights Division, U.S. Department of Justice, NYAV Bldg., Room 8000B, Washington, DC 20530–0001
Criminal Division, U.S. Department of Justice, WCTR Bldg., Suite 1075, Washington, DC 20530–0001
Environment and Natural Resources Division, U.S. Department of Justice, Post Office Box 4390, Washington, DC 20044–4390
Justice Management Division
Tax Division, U.S. Department of Justice, JCB Bldg., Room 6823, Washington, DC 20530–0001
Bureau of Alcohol, Tobacco, Firearms, and Explosives, U.S. Department of Justice, Washington, DC 20226
Bureau of Prisons, U.S. Department of Justice, HOLC Bldg., Room 738, 320 First Street, NW., Washington, DC 20534–0001
Community Relations Service, U.S. Department of Justice, BICN Bldg., Suite 2000, Washington, DC 20530–0001
Drug Enforcement Administration, U.S. Department of Justice, Washington, DC 20537–0001
Executive Office for Immigration Review, U.S. Department of Justice, Suite 2400, 5107 Leesburg Pike, Falls Church, VA 22041–0001
Executive Office for United States Attorneys, U.S. Department of Justice, BICN Bldg., Room 7100, Washington, DC 20530–0001
Executive Office for United States Trustees, U.S. Department of Justice, 901E Bldg., Room 780, Washington, DC 20530–0001
Federal Bureau of Investigation, U.S. Department of Justice, 935 Pennsylvania Avenue, NW., Washington, DC 20535–0001 (for field offices, consult your telephone book)
Foreign Claims Settlement Commission, U.S. Department of Justice, BICN Bldg., Room 6002, 600 E Street, NW., Washington, DC 20579–0001
Immigration and Naturalization Service, U.S. Department of Justice, CAB Bldg., 425 Eye Street, NW., Washington, DC 20536–0001 (for field offices, consult your telephone book)
INTERPOL-U.S. National Central Bureau, U.S. Department of Justice, Washington, DC 20530–0001
National Drug Intelligence Center, U.S. Department of Justice, Fifth Floor, 319 Washington Street, Johnstown, PA 15901–1622
Office of Community Oriented Policing Services, U.S. Department of Justice, VT1 Bldg., Twelfth Floor, Washington, DC 20530–0001
Office of Justice Programs, U.S. Department of Justice, Room 5337, 810 Seventh Street, NW., Washington, DC 20531–0001
Pardon Attorney, U.S. Department of Justice, FRST Bldg., Fourth Floor, Washington, DC 20530–0001

United States Marshals Service, U.S. Department of Justice, Lincoln Place, Room 1250, CSQ3, 600 Army Navy Drive, Arlington, VA 22202–4210

[Order No. 2156–98, 63 FR 29604, June 1, 1998; 63 FR 34965, June 26, 1998; 63 FR 51401, Sept. 25, 1998; Order No. 2650–2003, 68 FR 4928, Jan. 31, 2003]

PART 17—CLASSIFIED NATIONAL SECURITY INFORMATION AND ACCESS TO CLASSIFIED INFORMATION

Sec.
17.1 Purpose.
17.2 Scope.
17.3 Definitions.

Subpart A—Administration

17.11 Authority of the Assistant Attorney General for Administration.
17.12 Component head responsibilities.
17.13 National Security Division; interpretation of Executive Orders.
17.14 Department Review Committee.
17.15 Access Review Committee.
17.16 Violations of classified information requirements.
17.17 Judicial proceedings.
17.18 Prepublication review.

Subpart B—Classified Information

17.21 Classification and declassification authority.
17.22 Classification of information; limitations.
17.23 Emergency classification requests.
17.24 Duration of classification.
17.25 Identification and markings.
17.26 Derivative classification.
17.27 Declassification and downgrading.
17.28 Automatic declassification.
17.29 Documents of permanent historical value.
17.30 Classification challenges.
17.31 Mandatory review for declassification requests.
17.32 Notification of classification changes.

Subpart C—Access to Classified Information

17.41 Access to classified information.
17.42 Positions requiring financial disclosure.
17.43 Reinvestigation requirements.
17.44 Access eligibility.
17.45 Need-to-know.
17.46 Access by persons outside the Executive Branch.
17.47 Denial or revocation of eligibility for access to classified information.

AUTHORITY: 28 U.S.C. 501, 509, 510, 515–519; 5 U.S.C. 301; E.O. 12958, 60 FR 19825, 3 CFR, 1995 Comp., p. 333; E.O. 12968, 60 FR 40245, 3 CFR, 1995 Comp., p. 391; 32 CFR part 2001.

SOURCE: Order No. 2091–97, 62 FR 36984, July 10, 1997, unless otherwise noted.

§ 17.1 Purpose.

The purpose of this part is to ensure that information within the Department of Justice (the ''Department'') relating to the national security is classified, protected, and declassified pursuant to the provisions of Executive Orders 12958 (3 CFR, 1995 Comp., p. 333) and 12968 (3 CFR, 1995 Comp., p. 391) and implementing directives from the Information Security Oversight Office of the National Archives and Records Administration (''ISOO''). Executive Orders 12958 and 12968 made numerous substantive changes in the system of classification, declassification, and downgrading of classified National Security Information and the criteria for access to this information. Accordingly, this part is a revision of the Department's classified information security rules.

(a) Subpart A of this part prescribes the implementation of Executive Orders 12958 and 12968 within the Department through the Assistant Attorney General for Administration, as the senior responsible agency official. Subpart A of this part also provides for certain relationships within the Department between the Assistant Attorney General for Administration, other component heads, and the National Security Division.

(b) Subpart B of this part prescribes an orderly and progressive system for ensuring that every necessary safeguard and procedure is in place to assure that information is properly classified and that classified information is protected from unauthorized disclosure. Subpart B of this part requires original classification authorities to make classification decisions based on specific criteria; provides that most newly created classified information be considered for declassification after 10 years; provides that historically valuable information that is more than 25 years old (including information classified under prior Executive Orders) be

automatically declassified, with appropriate exceptions; and establishes procedures for authorized holders of classified information to challenge the classification of information.

(c) Subpart C of this part establishes substantive standards and procedures for granting, denying, and revoking, and for appealing decisions to deny access to classified information with an emphasis on ensuring the consistent, cost-effective, and efficient protection of classified information. Subpart C of this part provides a process that is fair and equitable to those with whom classified information is entrusted and, at the same time, assures the security of the classified information.

[Order No. 2091–97, 62 FR 36984, July 10, 1997, as amended by Order No. 2865–2007, 72 FR 10069, Mar. 7, 2007]

§ 17.2 Scope.

(a) All employees, contractors, grantees, and others granted access to classified information by the Department are governed by this part, and by the standards in Executive Order 12958, Executive Order 12968, and directives promulgated under those Executive Orders. If any portion of this part conflicts with any portion of Executive Order 12958, Executive Order 12968, or any successor Executive Order, the Executive Order shall apply. This part supersedes the former rule and any Department internal operating policy or directive that conflicts with any portion of this part.

(b) This part applies to non-contractor personnel outside of the Executive Branch and to contractor personnel or employees who are entrusted with classified national security information originated within or in the custody of the Department. This part does not affect the operation of the Department's participation in the National Industrial Security Program under Executive Order 12829 (3 CFR, 1993 Comp., p. 570).

(c) This part is independent of and does not affect any classification procedures or requirements of the Atomic Energy Act of 1954, as amended (42 U.S.C. 2011 *et seq*).

(d) This part does not, and is not intended to, create any right to judicial review, or any other right or benefit or trust responsibility, substantive or procedural, enforceable by a party against the United States, its agencies or instrumentalities, its officers or employees, or any other person. This part creates limited rights to administrative review of decisions pursuant to §§ 17.30, 17.31, and 17.47. This part does not, and is not intended to, create any right to judicial review of administrative action under §§ 17.14, 17.15, 17.18, 17.27, 17.30, 17.31 and 17.50.

§ 17.3 Definitions.

The terms defined or used in Executive Order 12958 and Executive Order 12968, and the implementing directives in 32 CFR 2001, are applicable to this part.

Subpart A—Administration

§ 17.11 Authority of the Assistant Attorney General for Administration.

(a) The Assistant Attorney General for Administration is designated as the senior agency official as required by § 5.6(c) of Executive Order 12958, and § 6.1(a) of Executive Order 12968 and, except as specifically provided elsewhere in this part, is authorized to administer the Department's national security information program pursuant to Executive Order 12958. The Assistant Attorney General for Administration shall appoint a Department Security Officer and may delegate to the Department Security Officer those functions under Executive Orders 12958 and 12968 that may be delegated by the senior agency official. The Department Security Officer may redelegate such functions when necessary to effectively implement this part.

(b) The Assistant Attorney General for Administration shall, among other actions:

(1) Oversee and administer the Department's program established under Executive Order No. 12958;

(2) Establish and maintain Department-wide security education and training programs;

(3) Establish and maintain an ongoing self-inspection program including the periodic review and assessment of the Department's classified product;

(4) Establish procedures to prevent unnecessary access to classified information, including procedures that:

(i) Require that a need for access to classified information is established before initiating administrative procedures to grant access; and

(ii) Ensure that the number of persons granted access to classified information is limited to the minimum necessary for operational and security requirements and needs;

(5) Develop special contingency plans for the safeguarding of classified information used in or near hostile or potentially hostile areas;

(6) Assure that the performance contract or other system used to rate personnel performance includes the management of classified information as a critical element or item to be evaluated in the rating of:

(i) Original classification authorities;

(ii) Security managers or security specialists; and

(iii) All other personnel whose duties significantly involve the creation or handling of classified information;

(7) Account for the costs associated with implementing this part and report the cost to the Director of the ISOO;

(8) Assign in a prompt manner personnel to respond to any request, appeal, challenge, complaint, or suggestion concerning Executive Order 12958 that pertains to classified information that originated in a component of the Department that no longer exists and for which there is no clear successor in function;

(9) Cooperate, under the guidance of the Security Policy Board, with other agencies to achieve practical, consistent, and effective adjudicative training and guidelines;

(10) Conduct periodic evaluations of the Department's implementation and administration of Executive Orders 12958 and 12968;

(11) Establish a plan for compliance with the automatic declassification provisions of Executive Order 12958 and oversee the implementation of that plan; and

(12) Maintain a list of specific files series of records exempted from automatic declassification by the Attorney General pursuant to section 3.4(c) of Executive Order 12958.

(c) The Department Security Officer may grant, deny, suspend, or revoke employee access to classified information pursuant to and in accordance with Executive Order 12968. The Department Security Officer may delegate the authority under this paragraph to qualified Security Programs Managers when the operational need justifies the delegation and when the Department Security Officer is assured that such officials will apply all access criteria in a uniform and correct manner in accord with the provisions of Executive Order 12968 and subpart C of this part. The fact that a delegation has been made pursuant to this section does not waive the Department Security Officer's authority to make any determinations that have been delegated.

(d) The Department Security Officer shall maintain a current list of all officials authorized pursuant to this part to originally classify or declassify documents.

(e) The Department Security Officer shall promulgate criteria and security requirements for the marking and safeguarding of information, transportation and transfer of information, preparation of classification guides, reporting of communications related to national security by persons granted access to classified information, reporting of information that raises doubts as to whether another employee's continued eligibility for access to classified information is clearly consistent with the national security, and other matters necessary to the administration of the Executive Orders, the implementing regulations of the ISOO, and this part.

§ 17.12 Component head responsibilities.

The head of each component shall appoint and oversee a Security Programs Manager to implement this regulation. The Security Programs Managers shall:

(a) Observe, enforce, and implement security regulations or procedures pertaining to the classification, declassification, safeguarding, handling, and storage of classified national security information;

(b) Report violations of the provisions of this regulation to the Department Security Officer;

(c) Ensure that all employees acquire adequate security education and training as required by the provisions of the Department security regulations and procedures for classified information;

(d) Continuously review the requirements for personnel access to classified information as a part of the continuous need-to-know evaluation, and initiate action to administratively withdraw or reduce the level of access authorized, as appropriate; and

(e) Cooperate fully with any request from the Department Security Officer for assistance in the implementation of this part.

§ 17.13 National Security Division; interpretation of Executive Orders.

(a) The Assistant Attorney General for National Security or a designee shall represent the Attorney General at interagency meetings on matters of general interest concerning national security information.

(b) The Assistant Attorney General for National Security shall provide advice and interpretation on any issues that arise under Executive Orders 12958 and 12968 and shall refer such questions to the Office of Legal Counsel, as appropriate.

(c) Any request for interpretation of Executive Order 12958 or Executive Order 12968, pursuant to section 6.1(b) of Executive Order 12958, and section 7.2(b) of Executive Order 12968, shall be referred to the Assistant Attorney General for National Security, who shall refer such questions to the Office of Legal Counsel, as appropriate.

[Order No. 2865–2007, 72 FR 10069, Mar. 7, 2007]

§ 17.14 Department Review Committee.

(a) The Department Review Committee (DRC) is established to:

(1) Resolve all issues, except those related to the compromise of classified information, that concern the implementation and administration of Executive Order 12958, implementing directives from the ISOO, and subpart B of this part, including those issues concerning over-classification, failure to declassify, classification challenges, and delays in declassification not otherwise resolved;

(2) Review all appeals from denials of requests for records made under section 3.6 of Executive Order 12958 and the Freedom of Information Act (5 U.S.C. 552), when the proposed denial is based on their continued classification under Executive Order 12958;

(3) Recommend to the Attorney General appropriate administrative sanctions to correct the abuse or violation of any provision of Executive Order 12958, the implementing directives or subpart B of this part, except as it relates to the compromise of classified national security information; and

(4) Review, on appeal, challenges to classification actions and mandatory review requests.

(b)(1) The DRC shall consist of a senior representative designated by the:

(i) Deputy Attorney General;

(ii) Assistant Attorney General, Office of Legal Counsel;

(iii) Assistant Attorney General, Criminal Division;

(iv) Assistant Attorney General, Civil Division;

(v) Assistant Attorney General for National Security;

(vi) Assistant Attorney General for Administration; and

(vii) Director, Federal Bureau of Investigation.

(2) Each such official shall also designate in writing an alternate to serve in the absence of his or her representative. Four representatives shall constitute a quorum of the DRC. The Attorney General shall designate the Chairman of the DRC from among its members.

(c) The Office of Information and Privacy (OIP) shall provide the necessary administrative staff support for the DRC.

[Order No. 2091–97, 62 FR 36984, July 10, 1997, as amended by Order No. 2865–2007, 72 FR 10069, Mar. 7, 2007]

§ 17.15 Access Review Committee.

(a) The Access Review Committee (ARC) is hereby established to review all appeals from denials or revocations of eligibility for access to classified information under Executive Order 12968. Unless the Attorney General requests recommendations from the ARC and

personally exercises appeal authority, the ARC's decisions shall be final.

(b) The ARC shall consist of the Deputy Attorney General or a designee, the Assistant Attorney General for National Security or a designee, and the Assistant Attorney General for Administration or a designee. Designations must be approved by the Attorney General.

(c) The Department Security Officer shall provide the necessary administrative staff support for the ARC.

[Order No. 2091–97, 62 FR 36984, July 10, 1997, as amended by Order No. 2865–2007, 72 FR 10069, Mar. 7, 2007]

§ 17.16 Violations of classified information requirements.

(a) Any person who suspects or has knowledge of a violation of this part, including the known or suspected loss or compromise of national security information, shall promptly report and confirm in writing the circumstances to the Department Security Officer. Any person who makes such a report to the Department Security Officer shall promptly furnish a copy of such report:

(1) If the suspected violation involves a Department attorney (including an Assistant United States Attorney or Special Assistant United States Attorney) while engaged in litigation, grand jury proceedings, or giving legal advice, or a law enforcement officer assisting an attorney engaged in such activity, to the Office of Professional Responsibility;

(2) If the suspected violation involves an employee of the Federal Bureau of Investigation (FBI) or the Drug Enforcement Administration, other than a law enforcement officer in paragraph (a)(1) of this section, to the Office of Professional Responsibility in that component; or

(3) In any other circumstance, to the Office of the Inspector General.

(b) Department employees, contractors, grantees, or consultants may be reprimanded, suspended without pay, terminated from classification authority, suspended from or denied access to classified information, or subject to other sanctions in accordance with applicable law and Department regulation if they:

(1) Knowingly, willfully, or negligently disclose to unauthorized persons information classified under Executive Order 12958 or predecessor orders;

(2) Knowingly, willfully, or negligently classify or continue the classification of information in violation of Executive Order 12958 or its implementing directives; or

(3) Knowingly, willfully, or negligently violate any other provision of Executive Order 12958, or knowingly and wilfully grant eligibility for, or allow access to, classified information in violation of Executive Order 12968, or its implementing directives, this part, or security requirements promulgated by the Department Security Officer.

§ 17.17 Judicial proceedings.

(a)(1) Any Department official or organization receiving an order or subpoena from a federal or state court to produce classified information, required to submit classified information for official Department litigative purposes, or receiving classified information from another organization for production of such in litigation, shall immediately determine from the agency originating the classified information whether the information can be declassified. If declassification is not possible, the Department official or organization and the assigned Department attorney in the case shall take all appropriate action to protect such information pursuant to the provisions of this section.

(2) If a determination is made to produce classified information in a judicial proceeding in any manner, the assigned Department attorney shall take all steps necessary to ensure the cooperation of the court and, where appropriate, opposing counsel in safeguarding and retrieving the information pursuant to the provisions of this regulation.

(b) The Classified Information Procedures Act (CIPA), Pub. L. 96–456, 94 Stat. 2025, 18 U.S.C. App., and the ''Security Procedures Established Pursuant to Pub. L. 96–456, 94 Stat. 2025, by the Chief Justice of the United States

for the Protection of Classified Information'' may be used in Federal criminal cases involving classified information. (Available from the Security and Emergency Planning Staff, Justice Management Division, Department of Justice, Washington, DC 20530.)

(c) In judicial proceedings other than Federal criminal cases where CIPA is used, the Department, through its attorneys, shall seek appropriate security safeguards to protect classified information from unauthorized disclosure, including, but not limited to, consideration of the following:

(1) A determination by the court of the relevance and materiality of the classified information in question;

(2) An order that classified information shall not be disclosed or introduced into evidence at a proceeding without the prior approval of either the originating agency, the Attorney General, or the President;

(3) A limitation on attendance at any proceeding where classified information is to be disclosed to those persons with appropriate authorization to access classified information whose duties require knowledge or possession of the classified information to be disclosed;

(4) A court facility that provides appropriate safeguarding for the classified information as determined by the Department Security Officer;

(5) Dissemination and accountability controls for all classified information offered for identification or introduced into evidence at such proceedings;

(6) Appropriate marking to indicate classified portions of any and any the maintenance of any classified under seal;

(7) Handling and storage of all classified information including classified portions of any transcript in a manner consistent with the provisions of this regulation and Department implementing directives;

(8) Return at the conclusion of the proceeding of all classified information to the Department or the originating agency, or placing the classified information under court seal;

(9) Retrieval by Department employees of appropriate notes, drafts, or any other documents generated during the course of the proceedings that contain classified information and immediate transfer to the Department for safeguarding and destruction as appropriate; and

(10) Full and complete advice to all persons to whom classified information is disclosed during such proceedings as to the classification level of such information, all pertinent safeguarding and storage requirements, and their liability in the event of unauthorized disclosure.

(d) Access to classified information by individuals involved in judicial proceedings other than employees of the Department is governed by § 17.46(c).

§ 17.18 Prepublication review.

(a) All individuals with authorized access to Sensitive Compartmented Information shall be required to sign nondisclosure agreements containing a provision for prepublication review to assure deletion of Sensitive Compartmented Information and other classified information. Sensitive Compartmented Information is information that not only is classified for national security reasons as Top Secret, Secret, or Confidential, but also is subject to special access and handling requirements because it involves or derives from particularly sensitive intelligence sources and methods. The prepublication review provision will require Department of Justice employees and other individuals who are authorized to have access to Sensitive Compartmented Information to submit certain material, described further in the agreement, to the Department prior to its publication to provide an opportunity for determining whether an unauthorized disclosure of Sensitive Compartmented Information or other classified information would occur as a consequence of it publication.

(b) Persons subject to these requirements are invited to discuss their plans for public disclosures of information that may be subject to these obligations with authorized Department representatives at an early stage, or as soon as circumstances indicate these policies must be considered. Except as provided in paragraph (j) of this section

for FBI personnel, all questions concerning these obligations should be addressed to the Assistant Attorney General for National Security, Department of Justice, 950 Pennsylvania Avenue, NW., Washington, DC 20530. The official views of the Department on whether specific materials require prepublication review may be expressed only by the Assistant Attorney General for National Security and persons should not act in reliance upon the views of other Department personnel.

(c) Prepublication review is required only as expressly provided for in a nondisclosure agreement. However, all persons who have had access to classified information have an obligation to avoid unauthorized disclosures of such information. Therefore, persons who have such access but are not otherwise required to submit to prepublication review under the terms of an employment or other nondisclosure agreement are encouraged to submit material for prepublication review voluntarily if they believe that such material may contain classified information.

(d) The nature and extent of the material that is required to be submitted for prepublication review under nondisclosure agreements is expressly provided for in those agreements. It should be clear, however, that such requirements do not extend to any materials that exclusively contain information lawfully obtained at a time when the author has no employment, contract, or other relationship with the United States Government or that contain information exclusively acquired outside the scope of employment.

(e) A person's obligation to submit material for prepublication review remains identical whether such person prepares the materials or causes or assists another person (such as a ghost writer, spouse, friend, or editor) in preparing the material. Material covered by a nondisclosure agreement requiring prepublication review must be submitted prior to discussing it with or showing it to a publisher, co-author, or any other person who is not authorized to have access to it. In this regard, it should be noted that a failure to submit such material for prepublication review constitutes a breach of the obligation and exposes the author to remedial action even in cases where the published material does not actually contain Sensitive Compartmented Information or classified information. See *Snepp* v. *United States*, 444 U.S. 507 (1980).

(f) The requirement to submit material for prepublication review is not limited to any particular type of material or disclosure or methods of production. Written materials include not only book manuscripts but all other forms of written materials intended for public disclosure, such as (but not limited to) newspaper columns, magazine articles, letters to the editor, book reviews, pamphlets, scholarly papers, and fictional material.

(g) Oral statements are also within the scope of a prepublication review requirement when based upon written materials, such as an outline of the statements to be made. There is no requirement to prepare written materials for review, however, unless there is reason to believe in advance that oral statements may contain Sensitive Compartmented Information or other information required to be submitted for review under the terms of the nondisclosure agreement. Thus, a person may participate in an oral presentation where there is no opportunity for prior preparation (e.g., news interview, panel discussion) without violating the provisions of this paragraph.

(h) Material submitted for republication review will be reviewed solely for the purpose of identifying and preventing the disclosure of Sensitive Compartmented Information and other classified information. This review will be conducted in an impartial manner without regard to whether the material is critical of or favorable to the Department. No effort will be made to delete embarrassing or critical statements that are unclassified. Materials submitted for review will be disseminated to other persons or agencies only to the extent necessary to identify classified information.

(i) The Assistant Attorney General for National Security or a designee (or,

in the case of FBI employees, the Section Chief, Records/Information Dissemination Section, Records Management Division) will respond substantively to prepublication review requests within 30 working days of receipt of the submission. Priority shall be given to reviewing speeches, newspaper articles, and other materials that the author seeks to publish on an expedited basis. The Assistant Attorney General's decisions may be appealed to the Deputy Attorney General, who will process appeals within 15 days of receipt of the appeal. The Deputy Attorney General's decision is final and not subject to further administrative appeal. Persons who are dissatisfied with the final administrative decision may obtain judicial review either by filing an action for declaratory relief, or by giving the Department notice of their intention to proceed with publication despite the Department's request for deletions of classified information and giving the Department 30 working days to file a civil action seeking a court order prohibiting disclosure. Employees and other affected individuals remain obligated not to disclose or publish information determined by the Government to be classified until any civil action is resolved.

(j) The obligations of Department of Justice employees described in this subpart apply with equal force to employees of the FBI with following exceptions and provisos:

(1) Nothing in this subpart shall supersede or alter obligations assumed under the basic FBI employment agreement.

(2) FBI employees required to sign nondisclosure agreements containing a provision for prepublication review pursuant to this subpart shall submit materials for review to the Section Chief, Records/Information Dissemination Section, Records Management Division. Such individuals shall also submit questions as to whether specific materials require prepublication review under such agreements to that Section for resolution. Where such questions raise policy questions or concern significant issues of interpretation under such an agreement, the Section Chief, Records/Information Dissemination Section, Records Management Division, shall consult with the Assistant Attorney General for National Security, or a designee, prior to responding to the inquiry.

(3) Decisions of the Section Chief, Records/Information Dissemination Section, Records Management Division, concerning the deletion of classified information, may be appealed to the Director, FBI, who will process appeals within 15 working days of receipt. Persons who are dissatisfied with the Director's decision may, at their option, appeal further to the Deputy Attorney General as provided in paragraph (i) of this section. Judicial review, as set forth in that paragraph, is available following final agency action in the form of a decision by the Director, if the appeal process in paragraph (i) of this section is pursued, the Deputy Attorney General.

[Order No. 2091–97, 62 FR 36984, July 10, 1997, as amended by Order No. 2865–2007, 72 FR 10069, Mar. 7, 2007]

Subpart B—Classified Information

§ 17.21 Classification and declassification authority.

(a) Top Secret original classification authority may only be exercised by the Attorney General, the Assistant Attorney General for Administration, and officials to whom such authority is delegated in writing by the Attorney General. No official who is delegated Top Secret classification authority pursuant to this paragraph may redelegate such authority.

(b) The Assistant Attorney General for Administration may delegate original Secret and Confidential classification authority to subordinate officials determined to have frequent need to exercise such authority. No official who is delegated original classification authority pursuant to this paragraph may redelegate such authority.

(c) Officials authorized to classify information at a specified level are also authorized to classify information at a lower level. In the absence of an official authorized to exercise classification authority pursuant to this section, the person designated to act in lieu of such official may exercise the official's classification authority.

§ 17.22 Classification of information; limitations.

(a) Information may be originally classified only if all of the following standards are met:

(1) The information is owned by, produced by or for, or is under the control of the United States Government;

(2) The information falls within one or more of the categories of information specified in section 1.5 of Executive Order 12958; and

(3) The classifying official determines that the unauthorized disclosure of the information reasonably could be expected to result in damage to the national security and such official is able to identify or describe the damage.

(b) Information may be classified as Top Secret, Secret, or Confidential according to the standards established in section 1.3 of Executive Order 12958. No other terms shall be used to identify United States classified national security information except as otherwise provided by statute.

(c) Information shall not be classified if there is significant doubt about the need to classify the information. If there is significant doubt about the appropriate level of classification with respect to information that is being classified, it shall be classified at the lower classification of the levels considered.

(d) Information shall not be classified in order to conceal inefficiency, violations of law, or administrative error; to prevent embarrassment to a person, organization, or agency; to restrain competition; or to prevent or delay release of information that does not require protection in the interest of national security. Information that has been declassified and released to the public under proper authority may not be reclassified.

(e) Information that has not previously been disclosed to the public under proper authority may be classified or reclassified after the Department has received a request for it under the Freedom of Information Act (5 U.S.C. 552), the Privacy Act of 1974 (5 U.S.C. 552a), or the mandatory review provisions of § 17.31. When it is necessary to classify or reclassify such information, it shall be forwarded to the Department Security Officer and classified or reclassified only at the direction of the Attorney General, the Deputy Attorney General, or the Assistant Attorney General for Administration.

(f) Compilations of items of information that are individually unclassified may be classified if the compiled information reveals an additional association or relationship that meets the standards for classification under Executive Order 12958 and that is not otherwise revealed in the individual items of information.

§ 17.23 Emergency classification requests.

(a) Whenever any employee, contractor, licensee, certificate holder, or grantee of the Department who does not have original classification authority originates or develops information that requires immediate classification and safeguarding, and no authorized classifier is available, that person shall:

(1) Safeguard the information in a manner appropriate for its classification level;

(2) Apply the appropriate overall classification markings; and

(3) Within five working days, securely transmit the information to the organization that has appropriate subject matter interest and classification authority.

(b) When it is not clear which Department organization would be the appropriate original classifier, the information shall be sent to the Department Security Officer to determine the appropriate organization.

(c) The organization with classification authority shall decide within 30 days whether to classify information.

§ 17.24 Duration of classification.

(a) At the time of original classification, original classification authorities shall attempt to establish a specific date or event for declassification not more than 10 years from the date of the original decision based on the duration of the national security sensitivity of the information. If the original classification authority cannot determine an earlier specific date or event for declassification, the information shall be marked for declassification 10 years from the date of the original decision.

(b) At the time of original classification, an original classification authority may exempt specific information from declassification within 10 years in accordance with section 1.6(d) of Executive Order 12958.

(c) An original classification authority may extend the duration of classification or reclassify specific information for successive periods not to exceed 10 years at a time if such action is consistent with the standards and procedures established under, and subject to the limitations of, Executive Order 12958.

§ 17.25 Identification and markings.

(a) Classified information must be marked pursuant to the standards set forth in section 1.7 of Executive Order 12958; ISOO implementing directives in 32 CFR 2001, subpart B; and internal Department of Justice direction provided by the Department Security Officer.

(b) Foreign government information shall be marked or classified at a level equivalent to that level of classification assigned by the originating foreign government.

(c) Information assigned a level of classification under predecessor Executive Orders shall be considered as classified at that level of classification.

§ 17.26 Derivative classification.

(a) Persons need not possess original classification authority to derivatively classify information based on source documents or classification guides.

(b) Persons who apply derivative classification markings shall observe original classification decisions and carry forward to any newly created documents the pertinent classification markings.

(c) Information classified derivatively from other classified information shall be classified and marked in accordance with the standards set forth in sections 2.1–2.3 of Executive Order 12958, the ISOO implementing directives in 32 CFR 2001.22, and internal Department directions provided by the Department Security Officer.

§ 17.27 Declassification and downgrading.

(a) Classified information shall be declassified as soon as it no longer meets the standards for classification. Declassification and downgrading is governed by § 3.1–3.3 of Executive Order 12958, implementing ISOO directives at 32 CFR 2001, subpart E, and applicable internal Department of Justice direction provided by the Department Security Officer.

(b) Information shall be declassified or downgraded by the official who authorized the original classification if that official is still serving in the same position, the originator's successor, or a supervisory official of either, or by officials delegated such authority in writing by the Attorney General or the Assistant Attorney General for Administration.

(c) It is presumed that information that continues to meet the classification requirements under Executive Order 12958 requires continued protection. In some exceptional cases during declassification reviews, the need to protect classified information may be outweighed by the public interest in disclosure of the information, and in these cases the information should be declassified. If it appears that the public interest in disclosure of the information may outweigh the need to protect the information, the declassification reviewing official shall refer the case with a recommendation for decision to the DRC. The DRC shall review the case and make a recommendation to the Attorney General on whether the public interest in disclosure outweighs the damage to national security that might reasonably be expected from disclosure. The Attorney General shall decide whether to declassify the information. The decision of the Attorney General shall be final. This provision does not amplify or modify the substantive criteria or procedures for classification or create any substantive or procedural rights subject to judicial review.

(d) Each component shall develop schedules for declassification of records in the National Archives. The Department shall cooperate with the National Archives and Records Administration and the Presidential Libraries

to ensure that declassification is accomplished in a timely manner.

§ 17.28 Automatic declassification.

(a) Subject to paragraph (b) of this section, all classified information contained in records that are more than 25 years old that have been determined to have permanent historical value shall be declassified automatically on April 17, 2000. Subsequently, all classified information in such records shall be automatically declassified not later than 25 years after the date of its original classification with the exception of specific information exempt from automatic declassification pursuant to section 3.4 (b) and (d) of Executive Order 12958.

(b) At least 220 days before information is declassified automatically under this section, the respective component head shall notify the Assistant Attorney General for Administration through the Department Security Officer of any specific information they propose to exempt from automatic declassification. The notification shall include:

(1) A description of the information;

(2) An explanation of why the information is exempt from automatic declassification and must remain classified for a longer period of time; and

(3) A specific date or event for declassification of the information whenever the information exempted does not identify a confidential human source or human intelligence source.

(c) Proposed exemptions under this section shall be forwarded to the DRC, which shall recommend a disposition of the exemption request to the Assistant Attorney General for Administration. When the Assistant Attorney General for Administration determines the exemption request is consistent with this section, he or she will submit it to the Executive Secretary of the Interagency Security Classification Appeals Panel.

(d) Declassification guides that narrowly and precisely define exempted information may be used to exempt information from automatic declassification. Declassification guides must include the exemption notification information detailed in paragraph (b) of this section, and be approved pursuant to paragraph (c) of this section.

§ 17.29 Documents of permanent historical value.

The original classification authority, to the greatest extent possible, shall declassify classified information contained in records determined to have permanent historical value under title 44 of the United States Code before they are accessioned into the National Archives. The Department shall cooperate with the National Archives and Records Administration in carrying out an automatic declassification program involving accessioned Department records, presidential papers, and historical materials under the control of the Archivist of the United States.

§ 17.30 Classification challenges.

(a) Authorized holders of information classified by the Department who, in good faith, believe that specific information is improperly classified or unclassified are encouraged and expected to challenge the classification status of that information pursuant to section 1.9 of Executive Order 12958. Authorized holders may submit classification challenges in writing to the DRC, through the Office of Information and Privacy, United States Department of Justice, Washington, DC 20530. The challenge need not be more specific than a question as to why the information is or is not classified, or is classified at a certain level.

(b) The DRC shall redact the identity of an individual challenging a classification under paragraph (a) of this section and forward the classification challenge to the original classification authority for review and response.

(c) The original classification authority shall promptly, and in no case later than 30 days, provide a written response to the DRC. The original classification authority may classify or declassify the information subject to challenge or state specific reasons why the original classification determination was proper. If the original classification authority is not able to response within 30 days, the DRC shall inform the individual who filed the challenge in writing of that fact, and the anticipated determination date.

(d) The DRC shall inform the individual challenging the classification of the determination made by the original

classification authority and that individual may appeal this determination to the DRC. Upon appeal, the DRC may declassify, or direct the classification of, the information. If the DRC is not able to act on any appeal within 45 days of receipt, the DRC shall inform the individual who filed the challenge in writing of that fact, and the anticipated determination date.

(e) The DRC shall provide the individual who appeals a classification challenge determination with a written explanation of the basis for the DRC decision and a statement of his or her right to appeal that determination to the Interagency Security Classification Appeals Panel (ISCAP) pursuant to section 5.4 of Executive Order 12958 and the rules issued by the ISCAP pursuant to section 5.4 of Executive Order 12958.

(f) Any individual who challenges a classification and believes that any action has been taken against him or her in retribution because of that challenge shall report the facts to the Office of the Inspector General or the Office of Professional Responsibility, as appropriate.

(g) Requests for review of classified material for declassification by persons other than authorized holders are governed by § 17.31.

§ 17.31 Mandatory review for declassification requests.

(a) Any person may request classified information be reviewed for declassification pursuant to the mandatory declassification review provisions of section 3.6 of Executive Order 12958. After such a review, the information or any reasonably segregable portion thereof that no longer requires protection under this part shall be declassified and released to the requester unless withholding is otherwise warranted under applicable law. If the information, although declassified, is withheld, the requester shall be given a brief statement as to the reasons for denial and a notice of the right to appeal the determination to the Director, Office of Information and Privacy (OIP), United States Department of Justice, Washington, DC 20530. If the mandatory review for declassification request relates to the classification of information that has been reviewed for declassification within the past two years or that is the subject of pending litigation, the requester shall be informed of that fact and the administrative appeal rights.

(b) Request for mandatory review for declassification and any subsequent appeal to the DRC shall be submitted to the Director, Office of Information and Privacy, United States Department of Justice, Washington, DC 20530, describing the document or material containing the information with sufficient specificity to enable the Department to locate that information with a reasonable amount of effort. The OIP shall promptly forward the request to the component that originally classified the information, or the DRC in the case of an appeal, and provide the requester with an acknowledgement of receipt of the request.

(c) When the description of the information in a request is deficient, the component shall solicit as much additional identifying information as possible from the requestor. Before denying a request on the basis that the information or material is not obtainable with a reasonable amount of effort, the component shall ask the requestor to limit the request to information or material that is reasonably obtainable. If the information or material requested cannot be described in sufficient particularity, or if it cannot be obtained with a reasonable amount of effort, the component shall provide the requestor with written notification of the reasons why no action will be taken and the right to appeal the decision to the DRC.

(d) The component that originally classified the information shall provide a written response to requests for mandatory review within 60 days whenever possible, or shall inform the requester in writing why additional time is needed. Unless there are unusual circumstances, the additional time needed by the component originally classifying the information shall not extend beyond 180 days from the receipt of the request. If no determination has been made at the end of the 180 day period, the requester may apply to the DRC for a determination.

(e) If the component that originally classified the information determines

that continued classification is warranted, it shall notify the requester in writing of the decision and the right to appeal the decision to the DRC no later that 60 days after receipt of the notification of the decision.

(f) The DRC shall determine the appeals of the components' mandatory declassification review decisions within 60 days after receipt of the appeal, or notify the requester why additional time is needed. In making its determinations concerning requests for declassification of classified information, the DRC, for administrative purposes, shall impose the burden of proof on the originating component to show that continued classification is warranted. The DRC shall provide the requester with a written statement of reasons for its decisions.

(g) If the individual requesting review of a classification is not satisfied with the DRC's decision, he or she may appeal to the ISCAP pursuant to section 5.4 of Executive Order 12958 and rules issued by the ISCAP pursuant to that section.

§ 17.32 Notification of classification changes.

All known holders of information affected by unscheduled classification changes actions shall be notified promptly of such changes by the original classifier or the authority making the change in classification.

Subpart C—Access to Classified Information

§ 17.41 Access to classified information.

(a) No person may be given access to classified information or material originated by, in the custody, or under the control of the Department, unless the person—

(1) Has been determined to be eligible for access in accordance with sections 3.1–3.3 of Executive Order 12968;

(2) Has a demonstrated need-to-know; and

(3) Has signed an approved nondisclosure agreement.

(b) Eligibility for access to classified information is limited to United States citizens for whom an appropriate investigation of their personal and professional history affirmatively indicated loyalty to the United States, strength of character, trustworthiness, honesty, reliability, discretion, and sound judgment, as well as freedom from conflicting allegiances and potential for coercion, and willingness and ability to abide by regulations governing the use, handling, and protection of classified information. A determination of eligibility for access to classified information is a discretionary security decision based on judgments by appropriately trained adjudicative personnel. Eligibility shall be granted only where facts and circumstances indicate access to classified information is clearly consistent with the national security interests of the United States and any doubt shall be resolved in favor of the national security. Sections 2.6 and 3.3 of Executive Order 12968 provide only limited exceptions to these requirements.

(c) The Department of Justice does not discriminate on the basis of race, color, religion, sex, national origin, disability, or sexual orientation in granting access to classified information. However, the Department may investigate and consider any matter that relates to the determination of whether access is clearly consistent with the interests of national security. No negative inferences concerning the standards for access may be raised solely on the basis of the sexual orientation of the employee or mental health counseling.

(d) An employee granted access to classified information may be investigated at any time to ascertain whether he or she continues to meet the requirements for access.

(e) An employee granted access to classified information shall provide to the Department written consent permitting access by an authorized investigative agency, for such time as access to classified information is maintained and for a period of three years thereafter, to:

(1) Financial records maintained by a financial institution as defined in 31 U.S.C. 5312(a) or by a holding company as defined in 12 U.S.C. 3401;

(2) Consumer reports under the Fair Credit Reporting Act (15 U.S.C. 1681 *et seq.*); and

(3) Records maintained by commercial entities within the United States pertaining to any travel by the employee outside the United States.

(f) Information may be requested pursuant to the employee consent obtained under paragraph (e) of this section only where:

(1) There are reasonable grounds to believe, based on credible information, that the employee or former employee is, or may be, disclosing classified information in an unauthorized manner to a foreign power or agent of a foreign power;

(2) Information the Department deems credible indicates the employee or former employee has incurred excessive indebtedness or has acquired a level of affluence that cannot be explained by other information; or

(3) Circumstances indicate that the employee or former employee had the capability and opportunity to disclose classified information that is known to have been lost or compromised to a foreign power or an agent of a foreign power.

§ 17.42 Positions requiring financial disclosure.

(a) The Assistant Attorney General for Administration, in consultation with the Assistant Attorney General for National Security, shall designate each employee, by position or category where possible, who has a regular need for access to any of the categories of classified information described in section 1.3(a) of Executive Order 12968.

(b) An employee may not hold a position designated as requiring a regular need for access to categories of classified information described in section 1.3(a) of Executive Order 12968 unless, as a condition of access to such information, the employee files with the Department Security Officer:

(1) A financial disclosure form developed pursuant to section 1.3(c) of Executive Order 12968 as part of all background investigations or reinvestigations;

(2) The same financial disclosure form, if selected by the Department Security Officer on a random basis; and

(3) Relevant information concerning foreign travel, as determined by the Department Security Officer.

[Order No. 2091–97, 62 FR 36984, July 10, 1997, as amended by Order No. 2865–2007, 72 FR 10069, Mar. 7, 2007]

§ 17.43 Reinvestigation requirements.

Employees who are eligible for access to classified information shall be subject to periodic reinvestigations and may also be reinvestigated if, at any time, there is reason to believe that they may no longer meet the standards for access.

§ 17.44 Access eligibility.

(a) Determinations of eligibility for access to classified information are separate from suitability determinations with respect to the hiring or retention of persons for employment by the Department or any other personnel actions.

(b) The number of employees eligible for access to classified information shall be kept to the minimum required for the conduct of Department functions.

(c) Eligibility for access to classified information shall be limited to classification levels for which there is a need for access. No person shall be granted eligibility higher than his or her need.

§ 17.45 Need-to-know.

No person shall be granted access to specific classified information unless that person has an actual need-to-know that classified information, pursuant to section 2.5 of Executive Order 12968.

§ 17.46 Access by persons outside the Executive Branch.

(a) Classified information shall not be disseminated outside the Executive Branch except under conditions that ensure that the information will be given protection equivalent to that afforded within the Executive Branch.

(b) Classified information originated by or in the custody of the Department may be made available to individuals or agencies outside the Executive Branch provided that such information is necessary for performance of a function from which the Federal Government will derive a benefit or advantage and that the release is not prohibited

by the originating department or agency (or foreign government in the case of Foreign Government Information). Before such a release is made, the head of the Office, Board, Division, or Bureau making the release shall determine the propriety of such action, in the interest of the national security, and must approve the release. Prior to the release, the Department Security Officer must confirm that the recipient is eligible for access to the classified information involved and agrees to safeguard the information in accordance with the provisions of this part.

(c) Members of Congress, Justices of the United States Supreme Court, and Judges of the United States Courts of Appeal and District Courts do not require a determination of their eligibility for access to classified information by the Department. Federal Magistrate Judges must be determined eligible for access to classified information by the Department Security Officer pursuant to procedures approved by the Assistant Attorney General for Administration in consultation with the Judicial Conference of the United States. All other Legislative and Judicial personnel including, but not limited to, congressional staff, court reporters, typists, secretaries, law clerks, and translators who require access to classified information must be determined eligible by the Department Security Officer consistent with standards established in this regulation.

(d) When other persons outside the Executive Branch who are not subject to the National Industrial Security Program require access to classified information originated by or in the custody of the Department, but do not otherwise possess a proper access authorization, an appropriate background investigation must be completed to allow the Department Security Officer to determine their eligibility for access to classified information. The length of time it generally takes to complete an expedited background investigation is 90 days. Therefore, all persons requiring access to classified information to participate in congressional or judicial proceedings should be identified and the background investigation initiated far enough in advance to ensure a minimum impact on such proceedings.

(e) Personnel who are subject to a Department contract or grant or who are rendering consultant services to the Department and require access to classified information originated by or in the custody of the Department shall be processed for such access pursuant to procedures approved by the Assistant Attorney General for Administration.

(f)(1) The requirement that access to classified information may be granted only as is necessary for the performance of official duties may be waived, pursuant to section 4.5(a) of Executive Order 12958, for persons who:

(i) Are engaged in historical research projects; or

(ii) Have previously occupied policymaking positions to which they were appointed by the President.

(2) All persons receiving access pursuant to this paragraph (f) must have been determined to be trustworthy by the Department Security Officer as a precondition before receiving access. Such determinations shall be based on such investigation as the Department Security Officer deems appropriate. Historical researchers and former presidential appointees shall not have access to Foreign Government Information without the written permission from an appropriate authority of the foreign government concerned.

(3) Waivers of the ''need-to-know'' requirement under this paragraph (f) may be granted by the Department Security Officer provided that the Security Programs Manager of the Office, Board, Division, or Bureau with classification jurisdiction over the information being sought:

(i) Makes a written determination that such access is consistent with the interest of national security;

(ii) Limits such access to specific categories of information over which the Department has classification jurisdiction;

(iii) Maintains custody of the classified information at a Department facility;

(iv) Obtains the recipient's written and signed agreement to safeguard the information in accordance with the provisions of this regulation and to authorize a review of any notes and manuscript for determination that no

classified information is contained therein; and

(v) In the case of former presidential appointees, limits their access to items that such former appointees originated, reviewed, signed, or received while serving as a presidential appointee and ensures that such appointee does not remove or cause to be removed any classified information reviewed.

(4) If access requested by historical researchers and former presidential appointees requires the rendering of services for which fair and equitable fees may be charged pursuant to 31 U.S.C. 9701, the requester shall be so notified and fees may be imposed.

§ 17.47 Denial or revocation of eligibility for access to classified information.

(a) Applicants and employees who are determined to not meet the standards for access to classified information established in section 3.1 of Executive order 12968 shall be:

(1) Provided with a comprehensive and detailed written explanation of the basis for that decision as the national security interests of the United States and other applicable law permit and informed of their right to be represented by counsel or other representative at their own expense;

(2) Permitted 30 days from the date of the written explanation to request any documents, records, or reports including the entire investigative file upon which a denial or revocation is based; and

(3) Provided copies of documents requested pursuant to this paragraph (a) within 30 days of the request to the extent such documents would be provided if requested under the Freedom of Information Act (5 U.S.C. 552) or the Privacy Act of 1974 (5 U.S.C. 552a), and as the national security interests and other applicable law permit.

(b) An applicant or employee may file a written reply and request for review of the determination within 30 days after written notification of the determination or receipt of the copies of the documents requested pursuant to this subpart, whichever is later.

(c) An applicant or employee shall be provided with a written notice of and reasons for the results of the review, the identity of the deciding authority, and written notice of the right to appeal.

(d) Within 30 days of receipt of a determination under paragraph (c) of this section, the applicant or employee may appeal that determination in writing to the ARC, established under § 17.15. The applicant or employee may request an opportunity to appear personally before the ARC and to present relevant documents, materials, and information.

(e) An applicant or employee may be represented in any such appeal by an attorney or other representative of his or her choice, at his or her expense. Nothing in this section shall be construed as requiring the Department to grant such attorney or other representative eligibility for access to classified information, or to disclose to such attorney or representative, or permit the applicant or employee to disclose to such attorney or representative, classified information.

(f) A determination of eligibility for access to classified information by the ARC is a discretionary security decision. Decisions of the ARC shall be in writing and shall be made as expeditiously as possible. Access shall be granted only where facts and circumstances indicate that access to classified information is clearly consistent with the national security interest of the United States, and any doubt shall be resolved in favor of the national security.

(g) The Department Security Officer shall have an opportunity to present relevant information in writing or, if the applicant or employee appears personally, in person. Any such written submissions shall be made part of the applicant's or employee's security record and, as the national security interests of the United States and other applicable law permit, shall also be provided to the applicant or employee. Any personal presentations shall be, to the extent consistent with the national security and other applicable law, in the presence of the applicant or employee.

(h) When the Attorney General or Deputy Attorney General personally certifies that a procedure set forth in

this section cannot be made available in a particular case without damaging the national security interests of the United States by revealing classified information, the particular procedure shall not be made available. This is a discretionary and final decision not subject to further review.

(i) This section does not limit the authority of the Attorney General pursuant to any other law or Executive Order to deny or terminate access to classified information if the national security so requires and the Attorney General determines that the appeal procedures set forth in this section cannot be invoked in a manner that is consistent with the national security. Nothing in this section requires that the Department provide any procedures under this section to an applicant where a conditional offer of employment is withdrawn for reasons of suitability or any reason other than denial of eligibility for access to classified information. Suitability determinations shall not be used for the purpose of denying an applicant or employee the review proceedings of this section where there has been a denial or revocation of eligibility for access to classified information.

PART 18—OFFICE OF JUSTICE PROGRAMS HEARING AND APPEAL PROCEDURES

Sec.

18.1 Purpose.
18.2 Application.
18.3 Definitions.
18.4 Preliminary hearings.
18.5 Hearings.
18.6 Conduct of hearings.
18.7 Discovery.
18.8 Recommended decision.
18.9 Final agency decision.
18.10 Rehearing.

AUTHORITY: Secs. 802–804 of the Omnibus Crime Control and Safe Streets Act of 1968, 42 U.S.C. 3701, *et seq.*, as amended (Pub. L. 90–351, as amended by Pub. L. 93–83, Pub. L. 93–415, Pub. L. 94–430, Pub. L. 94–503, Pub. L. 95–115, Pub. L. 96–157, and Pub. L. 98–473).

Secs. 223(d), 226 and 228(e) of the Juvenile Justice and Delinquency Prevention Act of 1974, 42 U.S.C. 5601, *et seq.*, as amended (Pub. L. 93–415, as amended by Pub. L. 94–503, Pub. L. 95–115, Pub. L. 96–509, and Pub. L. 98–473).

Sec. 1407(F) of the Victims of Crime Act of 1984, 42 U.S.C. 10601, *et seq.* Pub. L. 98–473, 98 Stat. 2176.

SOURCE: 50 FR 28199, July 11, 1985, unless otherwise noted.

§ 18.1 Purpose.

The purpose of this regulation is to implement the hearing and appeal procedures available to State block or formula grant applicants or recipients and existing categorical grantees under sections 802 through 804 of title I of the Omnibus Crime Control and Safe Streets Act of 1968, as amended (Crime Control Act); sections 223(d), 226 and 228(e) of the Juvenile Justice and Delinquency Prevention Act of 1974, as amended (Juvenile Justice Act); and section 1407(F) of the Victims of Crime Act of 1984 (Victims of Crime Act).

§ 18.2 Application.

(a) These procedures apply to all appeals and hearings of State formula or block grant applicants or recipients and all existing recipients of categorical grants or cooperative agreements requested under section 802 of the Justice Assistance Act; sections 223(d), 226 and 228(e) of the Juvenile Justice Act; section 1407(F) of the Victims of Crime Act; the nondiscrimination provision of section 809 of the Crime Control Act, or the cross-referenced provisions of the Emergency Federal Law Enforcement Assistance Program. The method of notifying recipients of their non-compliance with section 809 (the nondiscrimination provison of the Crime Control Act and 28 CFR 42.208.

(b) These procedures do not apply to hearings requested under the Public Safety Officers' Benefits Act, 42 U.S.C. 3796, *et seq*. The hearing and appeal procedures available to claimants denied benefits under that Act are set forth in the appendix to 28 CFR part 32.

(c) These procedures do not apply to subgrant applicants or to recipients or third party beneficiaries of block or formula grants awarded to a State.

(d) These procedures do not apply to categorical grant applicants.

(e) These procedures do not apply to private sector/prison industry enhancement certification applicants; Regional

Information Sharing Systems grant applicants; surplus Federal property certification applicants; or the State reimbursement program for Incarcerated Mariel-Cubans.

§ 18.3 Definitions.

(a) *Block or formula grant applicant or recipient* means an applicant for a grant awarded under the provisions of part D of the Crime Control Act; part B, subpart I of the Juvenile Justice Act; and sections 1403 and 1404 of the Victims of Crime Act.

(b) *Categorical grant recipient* means a public or private agency which has received a research, statistics, discretionary, technical assistance, special emphasis, training, concentration of Federal effort or other direct Federal assistance award of grant funds.

(c) *Categorical grant applicant* means a public or private agency which has applied for a research, statistics, discretionary, technical assistance, special emphasis, training, concentration of Federal effort or other direct Federal assistance award of grant funds.

(d) *Grant* includes cooperative agreements and means a direct award of financial assistance from OJP, BJA, NIJ, OJJDP, BJS or OVC.

(e) *Crime Control Act* means the Omnibus Crime Control and Safe Streets Act of 1968, 42 U.S.C. 3701, *et seq.*, as amended.

(f) *Juvenile Justice Act* means the Juvenile Justice and Delinquency Prevention Act of 1974, 42 U.S.C. 5601, *et seq.*, as amended.

(g) *Responsible agency* means the organizational unit whose action is being appealed. This will be OJP, NIJ, BJS, OJJDP, BJA or OVC as appropriate. In hearings requested under the nondiscrimination provisions of the Crime Control Act, the responsible agency is OJP. In hearings requested to contest block or formula grant denials or terminations or categorical grant terminations, the responsible agency is the organizational unit that took the action at issue: OJP, BJA, OJJDP, NIJ, BJS or OVC.

(h) *Responsible agency official* means the Assistant Attorney General, Office of Justice Programs (OJP); the Director, Bureau of Justice Assistance (BJA); the Director, National Institute of Justice (NIJ); the Director, Bureau of Justice Statistics (BJS); the Director, Office for Victims of Crime (OVC); or the Administrator, Office of Juvenile Justice and Delinquency Prevention (OJJDP), as appropriate.

(i) *Sub-grant applicant or recipient* means the State agency, unit of local government or private non-profit organization which applies for, or receives, a grant from a State agency which administers a block or formula grant.

(j) *Victims of Crime Act* means the Victims of Crime Act of 1984, 42 U.S.C. 10601, *et seq.*

§ 18.4 Preliminary hearings.

(a) A grantee determined to be in noncompliance with the nondiscrimination provisions of the Crime Control Act, the Juvenile Justice Act or the Victims of Crime Act may request a preliminary hearing within 90 days after receipt of the notification of noncompliance.

(b) The preliminary hearing shall be initiated within 30 days of the request.

(c) The sole issue to be adjudicated by the hearing officer is whether the grantee is likely to prevail on the merits of the issue at a full hearing requested under 28 CFR 42.215. The grantee shall have the burden of persuading the hearing officer that the grantee is likely to prevail on the merits.

(d) The hearing officer may permit the parties to argue the issue by briefs, oral argument, or the presentation of testimony and exhibits. The hearing officer shall accept as evidence documents and other exhibits which can reasonably be authenticated and subjected to cross-examination at a full hearing.

(e) The hearing officer shall make the final decision on the issue within 15 days after the conclusion of the preliminary hearing.

§ 18.5 Hearings.

(a) Whenever the responsible agency official finds that there has been a substantial failure to comply with:

(1) The provisions of the Crime Control Act, the Juvenile Justice Act, or the Victims of Crime Act;

(2) Regulations promulgated by the responsible agency pursuant to appropriate statutory authority; or

(3) A plan or application submitted in accordance with the provisions of the Crime Control Act; the Juvenile Justice Act, the Victims of Crime Act, or the provisions of any other applicable Federal act, regulation or guideline;

the responsible agency shall notify the grantee or applicant State that all or part of its grant or subgrant will be terminated or suspended until the responsible agency is satisfied that there is no longer such failure.

(b) The notice shall contain:

(1) A statement of facts sufficient to inform the party of the reasons for the agency's proposed action;

(2) A statement of the nature of the action proposed to be taken; and

(3) A reference of the available appeal rights.

(c) If a block or formula grant applicant or recipient or a categorical grant recipient wishes to appeal any action covered by § 18.5(a) it may request a review of the issues in controversy within 30 days after notice of termination, noncompliance or denial by writing to:

Office of General Counsel, office of Justice Programs, U.S. Department of Justice, 633 Indiana Avenue NW., Room 1268, Washington, DC 20531.

(d) The request for a review shall contain:

(1) A factual statement sufficient to inform the responsible agency of the nature of the issues involved;

(2) A recital of the relief requested; and

(3) A request for an oral hearing, or in the alternative, an opportunity to submit only written information or argument to a hearing officer.

(e) If the responsible agency official determines that basis for the appeal in § 18.5(c) would not, if substantiated, establish a basis for grant award or continuation, the official may take final agency action on the appeal.

(f) The responsible agency or its representative may attempt to informally resolve a controversy arising under this section prior to initiating a hearing. Unless it is expressly agreed otherwise, an agreement to attempt informal resolution does not waive the right to the formal hearing.

(g) If the responsible agency or its representaive does not receive a request for a review within 30 days after notice has been sent, the opportunity for review is waived.

(h) All oral hearings requested under this section shall be held in Washington, DC, unless the hearing officer decides that the hearing could be conducted in a more expeditious, fair, or cost effective manner in another location.

(i) The responsible agency may suspend all or part of the grantee's funding pending the completion of the review process. If, at the conclusion of the review process, the responsible agency determines that the grantee is in compliance, it shall restore all previously suspended funding to the grantee.

(j) Any person may request the responsible agency official to determine whether a grantee has failed to comply with the terms of the statute under which the grant was awarded, agency regulations or the terms and conditions of the grant. The responsible agency may, in its discretion, conduct an investigation into the matter and, if warranted, make a determination of noncompliance. Only a grantee determined to be in noncompliance may request a compliance hearing.

§ 18.6 Conduct of hearings.

(a) A hearing officer appointed by the responsible agency official shall preside over the hearing. The hearing officer may be an administrative law judge, or an employee of the Department of Justice who was not involved in the administration, investigation or prosecution of the matter at issue. In hearings held under the nondiscrimination provisions of the Crime Control Act, the Juvenile Justice Act or the Victims of Crime Act, the hearing officer shall be an administrative law judge.

(b) If the hearing officer appointed is unacceptable to the appellant, it shall promptly inform the responsible agency official of the reasons for its position. The responsible agency official may select another hearing officer, or affirm the initial selection. In either case, the official shall inform the appellant of the reasons for the decision.

(c) The hearing officer shall have the following powers and duties:

(1) The power to hold hearings and regulate the course of the hearings and the conduct of the parties and their counsel;

(2) The power to sign and issue subpoenas and other orders requiring access to records;

(3) The power to administer oaths and affirmations;

(4) The power to examine witnesses;

(5) The power to rule on offers of proof and to receive evidence;

(6) The power to take depositions or to cause depositions to be taken;

(7) The power to hold conferences under §18.6(d) for the settlement or simplification of the issues or for any other proper purpose;

(8) The power to consider and rule upon procedural requests and other motions, including motions for default;

(9) The duty to conduct fair and impartial hearings;

(10) The duty to maintain order;

(11) The duty to avoid unnecessary delay; and

(12) All powers and duties reasonably necessary to perform the functions enumerated in subsections (1)–(11).

(d) The hearing officer may call upon the parties to consider:

(1) Simplification or clarification of the issues;

(2) Stipulations, admissions, agreements on documents, or other understandings which will expedite conduct of the hearing;

(3) Limitation of the number of witnesses and of cumulative evidence;

(4) Settlement of all or part of the issues in dispute;

(5) Such other matters as may aid in the disposition of the case.

(e) All hearings under this part shall be public unless otherwise ordered by the responsible agency official.

(f) The hearing shall be conducted in conformity with sections 5–8 of the Administrative Procedure Act, 5 U.S.C. 554–557.

(g) The responsible agency shall have the burden of going forward with the evidence and shall generally present its evidence first.

(h) Technical rules of evidence shall not apply to hearings conducted pursuant to this part, but rules designed to assure production of the most credible evidence available and to subject testimony to cross-examination shall be applied where reasonably necessary by the hearing officer. The hearing officer may exclude irrelevant, immaterial, or unduly repetitious evidence. All documents and other evidence offered or taken for the record shall be open to examination by the parties, and opportunity shall be given to refute facts and arguments advanced on either side of the issues. A transcript shall be made of the oral evidence except to the extent the substance thereof is stipulated for the record.

(i) During the time a proceeding is before a hearing officer, all motions shall be addressed to the hearing officer and, if within his or her delegated authority, shall be ruled upon. Any motion upon which the hearing officer has no authority to rule shall be certified to the responsible agency official with a recommendation. The opposing party may answer within such time as may be designated by the hearing officer. The hearing officer may permit further replies by both parties.

§ 18.7 Discovery.

(a)(1) At any time after the initiation of the proceeding, the hearing officer may order, by subpoena if necessary, the taking of a deposition and the production of relevant documents by the deponent. Such order may be entered upon a showing that the deposition is necessary for discovery purposes, and that such discovery could not be accomplished by voluntary methods. Such an order may also be entered in extraordinary circumstances to preserve relevant evidence upon a showing that there is substantial reason to believe that such evidence could not be presented through a witness at the hearing. The decisive factors for a determination under this subsection, however, shall be fairness to all parties and the requirements of due process. Depositions may be taken orally or upon written questions before any person who has the power to administer oaths.

(2) Each deponent shall be duly sworn, and any adverse party shall have the right to cross-examine. Objections to questions or documents shall be in short form, stating the grounds upon which objections are made. The

questions propounded and the answers thereto, together with all objections made (but not including argument or debate), shall be reduced to writing and certified by the officer before whom the deposition was taken. Thereafter, the officer shall forward the deposition and one (1) copy thereof to the party at whose instance the deposition was taken and shall forward one (1) copy to the representative of the other party.

(3) A deposition may be admitted into evidence as against any party who was present or represented at the taking of the deposition, or who had due notice thereof, if the hearing officer finds that there are sufficient reasons for admission and that the admission of the evidence would be fair to all parties and comport with the requirements of due process.

(b)(1) At any time after the initiation of the appeal, any party may serve upon any other party written interrogatories to be answered by the party served, or by an authorized representative of the party if the party served is a corporate or governmental entity. The party served shall furnish all information which is available to it.

(2) Each interrogatory shall be answered separately and fully in writing under oath by the party addressed or by an authorized representative. The time and manner of returning the interrogatory shall be prescribed by the hearing officer.

§ 18.8 Recommended decision.

Within a reasonable time after the close of the record of the hearings conducted under § 18.6, the hearing officer shall submit findings of fact, conclusions of law, and a recommended order to the responsible agency official, in writing. The hearing officer shall promptly make copies of these documents available to the parties.

§ 18.9 Final agency decision.

(a) In hearings conducted under § 18.6, the responsible agency official shall make the final agency decision, on the basis of the record, findings, conclusions, and recommendations presented by the hearing examiner.

(b) Prior to making a final decision, the responsible agency official shall give the parties an opportunity to submit the following, within thirty (30) days after the submission of the hearing officer's recommendations:

(1) Proposed findings and determinations;

(2) Exceptions to the recommendations of the hearing officer; and

(3) Supporting reasons for the exceptions or proposed findings or determinations; and

(4) Final briefs summarizing the arguments presented at the hearing.

(c) All determinations, findings and conclusions made by the responsible agency official shall be final and conclusive upon the responsible agency and all appellants.

§ 18.10 Rehearing.

(a) Any appellant dissatisfied with a final agency decision under § 18.9 may, within 30 days after the notice of the final agency decision is sent, request the responsible agency official to re-review the record, and present additional evidence which is appropriate and pertinent to support a different decision.

(b) If the responsible agency official finds that the appellant has:

(1) Presented evidence or argument which is sufficiently significant to require the conduct of further proceedings; or

(2) Shown some defect in the conduct of the initial hearing sufficient to cause substantial unfairness or an erroneous finding in that hearing, the responsible agency official may require that another oral hearing be held on one or more of the issues in controversy, or permit the dissatisfied party to present further evidence or argument in writing.

(c) Any rehearing ordered by the responsible agency official shall be conducted pursuant to §§ 18.5–18.8.

PART 19—USE OF PENALTY MAIL IN THE LOCATION AND RECOVERY OF MISSING CHILDREN

Sec.
19.1 Purpose.
19.2 Contact person for Missing Children Penalty Mail Program.
19.3 Policy.
19.4 Cost and percentage estimates.
19.5 Report to the Office of Juvenile Justice and Delinquency Prevention.

19.6 Responsibility of DOJ organizational units for program implementation and implementation procedures.

AUTHORITY: 39 U.S.C. 3220(a)(2), 5 U.S.C. 301.

SOURCE: Order No. 1239–87, 52 FR 45174, Nov. 25, 1987, unless otherwise noted.

§ 19.1 Purpose.

This regulation, providing for a Missing Children Penalty Mail Program in the Department of Justice (DOJ), is intended to comply with the regulation requirement set forth in section 1(a) of Public Law 99–87, which adds a new section 3220 to title 39, U.S. Code. The regulation also implements the Office of Juvenile Justice and Delinquency Prevention (OJJDP) guideline (50 FR 46622) promulgated under the authority of 39 U.S.C. 3220(a)(1), and is intended to assist in the location and recovery of missing children through the use of DOJ penalty mail.

§ 19.2 Contact person for Missing Children Penalty Mail Program.

The DOJ contact person for the Missing Children Penalty Mail Program is: Patricia Schellman, General Services Staff, Justice Management Division, U.S. Department of Justice, 10th and Constitution Ave., NW., Washington, DC 20530, telephone number (202) 633–2353.

§ 19.3 Policy.

(a) The Department of Justice will supplement and expand the national effort to assist in the location and recovery of missing children by maximizing the economical use of missing children photographs and biographical information in domestic penalty mail directed to members of the public.

(b) Because the use of inserts printed with missing children photographs and biographical information has been determined to be the most cost effective method for general application of the program, DOJ's first priority will be to insert, manually and via automated inserting equipment, photographs and biographical data related to missing children in a variety of types of penalty mail envelopes. These include:

(1) Standard letter-size envelopes (4½″×9½″);

(2) Document-size envelopes (9½″×12″, 9½×11½″, 10″×13″); and

(3) Other envelopes (misc. size).

(c)(1) Maximum consideration will be given to the use of missing children materials with high volume printing plant or distribution plan mail that will be sent to the public or to Federal, State or local government agencies. Every effort will be made to use the most cost effective and efficient methods of obtaining, distributing, and disseminating missing children information.

(2) In instances when the printing of photograph(s) and biographical information directly on self-mailers and other publications (newsletters, bulletins, etc.) and/or on penalty mail envelopes proves to be practical and cost effective, this method may also be used. Photographs and biographical information related to missing children may be printed on the three types of penalty mail envelopes listed above.

(d) Missing children information shall not be placed on the ''Penalty Indicia'', ''OCR Read Area'', ''Bar Code Read Area'', and ''Return Address'' areas of standard letter-size envelopes per appendix A of the OJJDP guideline as published in the November 8, 1985, FEDERAL REGISTER (50 FR 46625).

(e) The National Center for Missing and Exploited Children (National Center) will be the sole source from which DOJ will acquire the camera-ready and other photographic and biographical materials to be disseminated for use by DOJ organizational units. When printing missing children information, DOJ will select subjects in accordance with the schedule published by the National Center.

(f) DOJ will remove all printed penalty mail envelopes and other materials from circulation or other use (i.e.: Use or destroy) within a three month period from the date the National Center receives information or notice that a child whose photograph and biographical information have been made available to DOJ has been recovered or that the parent(s) or guardian's permission to use the child's photograph and biographical information has been withdrawn. The National Center will be responsible for immediately notifying the DOJ contact person, in writing, of the need to withdraw penalty mail envelopes and other materials related to

a particular child from circulation. Photographs which were reasonably current as of the time of the child's disappearance shall be the only acceptable form of visual media or pictorial likeness used on or in DOJ penalty mail.

(g) DOJ will give priority to penalty mail that:

(1) Is addressed to members of the public and will be received in the United States, its territories and possessions; and

(2) Is widely disseminated and read by DOJ employees such as inter- and intra-agency publications and other media.

(h) All DOJ employee suggestions, ideas or recommendations for innovative, cost-effective techniques for implementation of the Missing Children Penalty Mail Program should be forwarded to the DOJ contact person. DOJ Mail Managers shall hold biannual meetings to discuss the status of implementation of the current plan, and to consider recommendations to improve future plan implementation.

(i) This shall be the sole DOJ regulation implementing this program.

§ 19.4 Cost and percentage estimates.

It is estimated that this program will cost DOJ $78,000 during the initial year. This figure is based on estimates of printing, inserting, and administrative costs. It is DOJ's objective that 50 percent of DOJ penalty mail contain missing children photographs and biographical information by the end of the first year of the program.

§ 19.5 Report to the Office of Juvenile Justice and Delinquency Prevention.

DOJ will compile and submit to OJJDP, by June 30, 1987, a consolidated report on its experience in implementation of 39 U.S.C. 3220(a)(2), the OJJDP guidelines and the DOJ regulation. The report will consolidate information gathered from individual DOJ organizational units and cover the period February 5, 1986 through March 31, 1987. The report will provide the following information:

(a) DOJ's experience in implementation, including problems encountered, successful and/or innovative methods adopted to use missing children photographs and information on or in penalty mail, the *estimated* number of pieces of penalty mail containing such information, and the *estimated* percentage of total agency penalty mail, domestic penalty mail, and domestic penalty mail directed to members of the public which this number represents.

(b) The *estimated* total cost to implement the program, with supporting detail (for example, printing cost, hours of labor or labor cost, cost related to withdrawal of photographs, etc.).

(c) Recommendations for changes in the program which would make it more effective.

§ 19.6 Responsibility of DOJ organizational units for program implementation and implementation procedures.

(a) The General Services Staff, Justice Management Division (JMD), will be the liaison between the National Center and the principal organizational units of the Department. The General Services Staff, JMD shall be responsible for:

(1) Developing and disseminating Departmentwide guidelines and monitoring the implementation of the Missing Children Penalty Mail Program.

(2) Ordering camera-ready copies and other photographic and biographical material from the National Center, using the format established by the Center, and distributing the material within the Department of Justice.

(3) Immediately notifying DOJ components, in writing, of the need to use or withdraw from circulation, within 90 days, penalty mail envelopes, inserts and other material related to a recovered child or child whose parent(s) or guardian has withdrawn consent to use the photograph and biographical information. See 28 CFR 0.1, Organizational Structure of the Department of Justice, for a listing of DOJ principal organizational units designated as components.

(4) Collecting, analyzing and consolidating cost, mail volume data and other program related information and reporting to OJJDP, by June 30, 1987, on DOJ's experience in implementing the program.

(5) Conducting biannual meetings with selected components contacts to discuss current plans and solicit suggestions and/or recommendations for innovative and cost effective techniques to enhance the success of the program.

(6) Providing guidance and assistance to components in internal program development and implementation.

(7) Maintaining a list of DOJ personnel assigned to serve as Missing Children Program Coordinators for the components.

(b) Bureau Mail Managers and components Executive/Administrative Officers shall be responsible for:

(1) Establishing and implementing internal procedures and guidelines for the dissemination and use of missing children photographs and biographical information on or in domestic penalty mail. For example, the Bureau Mail Manager will provide guidance to Bureau offices on the types of missing children information which are available for use on or in penalty mail and establish procedures for obtaining and using the information, as appropriate.

(2) Identifying and reviewing publications and other Bureau media for suitable use in disseminating missing children photographs and information and obtaining approval for its use from the originating office.

(3) Ensuring that all printed penalty mail envelopes, inserts, and other penalty mail material containing photographs and biographical information on a missing child are used or removed from circulation or other use within 90 days from the date of DOJ notification by the National Center to withdraw material for that child.

(4) Designating Missing Children Coordinator(s) at headquarters and in each component and field office participating in the program.

(5) Arranging for printing and/or acquisition through designated channels, adequate supplies of inserts or penalty mail envelopes and other materials containing photographs and biographical data related to missing children.

(6) Collecting and reporting to the General Services Staff, Justice Management Division, the information identified in §19.5 of this part as required for inclusion in the DOJ's consolidated report to OJJDP.

(c) Component and Bureau Missing Children Program Coordinators shall be responsible for:

(1) Insuring that adequate supplies of envelopes or inserts are ordered, received or disseminated for use within the organizational unit or requesting camera-ready copy for printing from the DOJ contact person using a written form to be established by DOJ Guideline.

(2) Ensuring that the acquisition and use of missing children information through inserts or printing of these materials in publications or on envelopes is approved by appropriate authority within the organizational unit.

(3) Maintaining and disseminating supplies of inserts, envelopes, and camera-ready copy (for publications) to personnel who prepare domestic penalty mail for dispatch through the U.S. Postal Service.

(4) Notifying employees within their organizational unit to use or remove from circulation all printed penalty mail envelopes, inserts, and other material containing a photograph and biographical information on a missing child within 90 days from the date of DOJ notification by the National Center to withdraw material for that child.

(5) Serving as the central point of contact within their organizations for all matters relating to the Missing Children Penalty Mail Program.

(6) Collecting and reporting essential management information relating to the implemention of this program within their organizational unit and reporting this information to the appropriate Bureau Mail Manager or component Executive/Administrative Officer.

(d) Missing children pictures and biographical information shall not be:

(1) Printed on penalty mail envelopes, inserts, or other materials which are ordered and/or stocked in quantities which represent more than a 90 day supply.

(2) Printed on blank pages or covers of publications that may be included in the Superintendent of Documents' Sales Program or are to be distributed to depository Libraries.

(3) Inserted in any envelope and/or publication the contents of which may be construed to be inappropriate for association with the Missing Children Penalty Mail Program.

(e) Each component shall provide the General Services Staff, Justice Management Division, with the name(s), telephone number(s) and mailing address(es) of each designated Missing Children Program Coordinator within 30 days of the effective date of this regulation.

(f) Each component shall submit a quarterly report to the General Services Staff, Justice Management Division, within 5 days after the close of each Fiscal Year quarter providing the specific information identified in § 19.5 concerning implementation and participation in the program.

PART 20—CRIMINAL JUSTICE INFORMATION SYSTEMS

Subpart A—General Provisions

Sec.
20.1 Purpose.
20.2 Authority.
20.3 Definitions.

Subpart B—State and Local Criminal History Record Information Systems

20.20 Applicability.
20.21 Preparation and submission of a Criminal History Record Information Plan.
20.22 Certification of compliance.
20.23 Documentation: Approval by OJARS.
20.24 State laws on privacy and security.
20.25 Penalties.

Subpart C—Federal Systems and Exchange of Criminal History Record Information

20.30 Applicability.
20.31 Responsibilities.
20.32 Includable offenses.
20.33 Dissemination of criminal history record information.
20.34 Individual's right to access criminal history record information.
20.35 Criminal Justice Information Services Advisory Policy Board.
20.36 Participation in the Interstate Identification Index System.
20.37 Responsibility for accuracy, completeness, currency, and integrity.
20.38 Sanction for noncompliance.
APPENDIX TO PART 20—COMMENTARY ON SELECTED SECTIONS OF THE REGULATIONS ON CRIMINAL HISTORY RECORD INFORMATION SYSTEMS

AUTHORITY: 28 U.S.C. 534; Pub. L. 92–544, 86 Stat. 1115; 42 U.S.C. 3711, *et seq.*; Pub. L. 99–169, 99 Stat. 1002, 1008–1011, as amended by Pub. L. 99–569, 100 Stat. 3190, 3196; Pub. L. 101-410, 104 Stat. 890, as amended by Pub. L. 104–134, 110 Stat. 1321.

SOURCE: Order No. 601–75, 40 FR 22114, May 20, 1975, unless otherwise noted.

Subpart A—General Provisions

SOURCE: 41 FR 11714, Mar. 19, 1976, unless otherwise noted.

§ 20.1 Purpose.

It is the purpose of these regulations to assure that criminal history record information wherever it appears is collected, stored, and disseminated in a manner to ensure the accuracy, completeness, currency, integrity, and security of such information and to protect individual privacy.

[Order No. 2258–99, 64 FR 52226, Sept. 28, 1999]

§ 20.2 Authority.

These regulations are issued pursuant to sections 501 and 524(b) of the Omnibus Crime Control and Safe Streets Act of 1968, as amended by the Crime Control Act of 1973, Public Law 93–83, 87 Stat. 197, 42 U.S.C. 3701, *et seq.* (Act), 28 U.S.C. 534, and Public Law 92–544, 86 Stat. 1115.

§ 20.3 Definitions.

As used in these regulations:

(a) *Act* means the Omnibus Crime Control and Safe Streets Act, 42 U.S.C. 3701, *et seq.*, as amended.

(b) *Administration of criminal justice* means performance of any of the following activities: Detection, apprehension, detention, pretrial release, posttrial release, prosecution, adjudication, correctional supervision, or rehabilitation of accused persons or criminal offenders. The administration of criminal justice shall include criminal identification activities and the collection, storage, and dissemination of criminal history record information.

(c) *Control Terminal Agency* means a duly authorized state, foreign, or international criminal justice agency with

direct access to the National Crime Information Center telecommunications network providing statewide (or equivalent) service to its criminal justice users with respect to the various systems managed by the FBI CJIS Division.

(d) *Criminal history record information* means information collected by criminal justice agencies on individuals consisting of identifiable descriptions and notations of arrests, detentions, indictments, informations, or other formal criminal charges, and any disposition arising therefrom, including acquittal, sentencing, correctional supervision, and release. The term does not include identification information such as fingerprint records if such information does not indicate the individual's involvement with the criminal justice system.

(e) *Criminal history record information system* means a system including the equipment, facilities, procedures, agreements, and organizations thereof, for the collection, processing, preservation, or dissemination of criminal history record information.

(f) *Criminal history record repository* means the state agency designated by the governor or other appropriate executive official or the legislature to perform centralized recordkeeping functions for criminal history records and services in the state.

(g) *Criminal justice agency* means:

(1) Courts; and

(2) A governmental agency or any subunit thereof that performs the administration of criminal justice pursuant to a statute or executive order, and that allocates a substantial part of its annual budget to the administration of criminal justice. State and federal Inspector General Offices are included.

(h) *Direct access* means having the authority to access systems managed by the FBI CJIS Division, whether by manual or automated methods, not requiring the assistance of or intervention by any other party or agency.

(i) *Disposition* means information disclosing that criminal proceedings have been concluded and the nature of the termination, including information disclosing that the police have elected not to refer a matter to a prosecutor or that a prosecutor has elected not to commence criminal proceedings; or disclosing that proceedings have been indefinitely postponed and the reason for such postponement. Dispositions shall include, but shall not be limited to, acquittal, acquittal by reason of insanity, acquittal by reason of mental incompetence, case continued without finding, charge dismissed, charge dismissed due to insanity, charge dismissed due to mental incompetency, charge still pending due to insanity, charge still pending due to mental incompetence, guilty plea, nolle prosequi, no paper, nolo contendere plea, convicted, youthful offender determination, deceased, deferred disposition, dismissed-civil action, found insane, found mentally incompetent, pardoned, probation before conviction, sentence commuted, adjudication withheld, mistrial-defendant discharged, executive clemency, placed on probation, paroled, or released from correctional supervision.

(j) *Executive order* means an order of the President of the United States or the Chief Executive of a state that has the force of law and that is published in a manner permitting regular public access.

(k) *Federal Service Coordinator* means a non-Control Terminal Agency that has a direct telecommunications line to the National Crime Information Center network.

(l) *Fingerprint Identification Records System* or ''FIRS'' means the following FBI records: Criminal fingerprints and/or related criminal justice information submitted by authorized agencies having criminal justice responsibilities; civil fingerprints submitted by federal agencies and civil fingerprints submitted by persons desiring to have their fingerprints placed on record for personal identification purposes; identification records, sometimes referred to as ''rap sheets,'' which are compilations of criminal history record information pertaining to individuals who have criminal fingerprints maintained in the FIRS; and a name index pertaining to all individuals whose fingerprints are maintained in the FIRS. See the FIRS Privacy Act System Notice periodically published in the FEDERAL REGISTER for further details.

(m) *Interstate Identification Index System* or ''III System'' means the cooperative federal-state system for the exchange of criminal history records, and includes the National Identification Index, the National Fingerprint File, and, to the extent of their participation in such system, the criminal history record repositories of the states and the FBI.

(n) *National Crime Information Center* or ''NCIC'' means the computerized information system, which includes telecommunications lines and any message switching facilities that are authorized by law, regulation, or policy approved by the Attorney General of the United States to link local, state, tribal, federal, foreign, and international criminal justice agencies for the purpose of exchanging NCIC related information. The NCIC includes, but is not limited to, information in the III System. See the NCIC Privacy Act System Notice periodically published in the FEDERAL REGISTER for further details.

(o) *National Fingerprint File* or ''NFF'' means a database of fingerprints, or other uniquely personal identifying information, relating to an arrested or charged individual maintained by the FBI to provide positive identification of record subjects indexed in the III System.

(p) *National Identification Index* or ''NII'' means an index maintained by the FBI consisting of names, identifying numbers, and other descriptive information relating to record subjects about whom there are criminal history records in the III System.

(q) *Nonconviction data* means arrest information without disposition if an interval of one year has elapsed from the date of arrest and no active prosecution of the charge is pending; information disclosing that the police have elected not to refer a matter to a prosecutor, that a prosecutor has elected not to commence criminal proceedings, or that proceedings have been indefinitely postponed; and information that there has been an acquittal or a dismissal.

(r) *State* means any state of the United States, the District of Columbia, the Commonwealth of Puerto Rico, and any territory or possession of the United States.

(s) *Statute* means an Act of Congress or of a state legislature or a provision of the Constitution of the United States or of a state.

[Order No. 2258–99, 64 FR 52226, Sept. 28, 1999]

Subpart B—State and Local Criminal History Record Information Systems

SOURCE: 41 FR 11715, Mar. 19, 1976, unless otherwise noted.

§ 20.20 Applicability.

(a) The regulations in this subpart apply to all State and local agencies and individuals collecting, storing, or disseminating criminal history record information processed by manual or automated operations where such collection, storage, or dissemination has been funded in whole or in part with funds made available by the Law Enforcement Assistance Administration subsequent to July 1, 1973, pursuant to title I of the Act. Use of information obtained from the FBI Identification Division or the FBI/NCIC system shall also be subject to limitations contained in subpart C.

(b) The regulations in this subpart shall not apply to criminal history record information contained in:

(1) Posters, announcements, or lists for identifying or apprehending fugitives or wanted persons;

(2) Original records of entry such as police blotters maintained by criminal justice agencies, compiled chronologically and required by law or long standing custom to be made public, if such records are organized on a chronological basis;

(3) Court records of public judicial proceedings;

(4) Published court or administrative opinions or public judicial, administrative or legislative proceedings;

(5) Records of traffic offenses maintained by State departments of transportation, motor vehicles or the equivalent thereof for the purpose of regulating the issuance, suspension, revocation, or renewal of driver's, pilot's or other operators' licenses;

(6) Announcements of executive clemency.

(c) Nothing in these regulations prevents a criminal justice agency from disclosing to the public criminal history record information related to the offense for which an individual is currently within the criminal justice system. Nor is a criminal justice agency prohibited from confirming prior criminal history record information to members of the news media or any other person, upon specific inquiry as to whether a named individual was arrested, detained, indicted, or whether an information or other formal charge was filed, on a specified date, if the arrest record information or criminal record information disclosed is based on data excluded by paragraph (b) of this section. The regulations do not prohibit the dissemination of criminal history record information for purposes of international travel, such as issuing visas and granting of citizenship.

§ 20.21 Preparation and submission of a Criminal History Record Information Plan.

A plan shall be submitted to OJARS by each State on March 16, 1976, to set forth all operational procedures, except those portions relating to dissemination and security. A supplemental plan covering these portions shall be submitted no later than 90 days after promulgation of these amended regulations. The plan shall set forth operational procedures to—

(a) *Completeness and accuracy.* Insure that criminal history record information is complete and accurate.

(1) Complete records should be maintained at a central State repository. To be complete, a record maintained at a central State repository which contains information that an individual has been arrested, and which is available for dissemination, must contain information of any dispositions occurring within the State within 90 days after the disposition has occurred. The above shall apply to all arrests occurring subsequent to the effective date of these regulations. Procedures shall be established for criminal justice agencies to query the central repository prior to dissemination of any criminal history record information unless it can be assured that the most up-to-date disposition data is being used. Inquiries of a central State repository shall be made prior to any dissemination except in those cases where time is of the essence and the repository is technically incapable of responding within the necessary time period.

(2) To be accurate means that no record containing criminal history record information shall contain erroneous information. To accomplish this end, criminal justice agencies shall institute a process of data collection, entry, storage, and systematic audit that will minimize the possibility of recording and storing inaccurate information and upon finding inaccurate information of a material nature, shall notify all criminal justice agencies known to have received such information.

(b) *Limitations on dissemination.* Insure that dissemination of nonconviction data has been limited, whether directly or through any intermediary only to:

(1) Criminal justice agencies, for purposes of the administration of criminal justice and criminal justice agency employment;

(2) Individuals and agencies for any purpose authorized by statute, ordinance, executive order, or court rule, decision, or order, as construed by appropriate State or local officials or agencies;

(3) Individuals and agencies pursuant to a specific agreement with a criminal justice agency to provide services required for the administration of criminal justice pursuant to that agreement. The agreement shall specifically authorize access to data, limit the use of data to purposes for which given, insure the security and confidentiality of the data consistent with these regulations, and provide sanctions for violation thereof;

(4) Individuals and agencies for the express purpose of research, evaluative, or statistical activities pursuant to an agreement with a criminal justice agency. The agreement shall specifically authorize access to data, limit the use of data to research, evaluative, or statistical purposes, insure the confidentiality and security of the data consistent with these regulations and with section 524(a) of the Act and any regulations implementing section

524(a), and provide sanctions for the violation thereof. These dissemination limitations do not apply to conviction data.

(c) *General policies on use and dissemination.* (1) Use of criminal history record information disseminated to noncriminal justice agencies shall be limited to the purpose for which it was given.

(2) No agency or individual shall confirm the existence or nonexistence of criminal history record information to any person or agency that would not be eligible to receive the information itself.

(3) Subsection (b) does not mandate dissemination of criminal history record information to any agency or individual. States and local governments will determine the purposes for which dissemination of criminal history record information is authorized by State law, executive order, local ordinance, court rule, decision or order.

(d) *Juvenile records.* Insure that dissemination of records concerning proceedings relating to the adjudication of a juvenile as delinquent or in need or supervision (or the equivalent) to noncriminal justice agencies is prohibited, unless a statute, court order, rule or court decision specifically authorizes dissemination of juvenile records, except to the same extent as criminal history records may be disseminated as provided in paragraph (b) (3) and (4) of this section.

(e) *Audit.* Insure that annual audits of a representative sample of State and local criminal justice agencies chosen on a random basis shall be conducted by the State to verify adherence to these regulations and that appropriate records shall be retained to facilitate such audits. Such records shall include, but are not limited to, the names of all persons or agencies to whom information is disseminated and the date upon which such information is disseminated. The reporting of a criminal justice transaction to a State, local or Federal repository is not a dissemination of information.

(f) *Security.* Wherever criminal history record information is collected, stored, or disseminated, each State shall insure that the following requirements are satisfied by security standards established by State legislation, or in the absence of such legislation, by regulations approved or issued by the Governor of the State.

(1) Where computerized data processing is employed, effective and technologically advanced software and hardware designs are instituted to prevent unauthorized access to such information.

(2) Access to criminal history record information system facilities, systems operating environments, data file contents whether while in use or when stored in a media library, and system documentation is restricted to authorized organizations and personnel.

(3)(i) Computer operations, whether dedicated or shared, which support criminal justice information systems, operate in accordance with procedures developed or approved by the participating criminal justice agencies that assure that:

(*a*) Criminal history record information is stored by the computer in such manner that it cannot be modified, destroyed, accessed, changed, purged, or overlaid in any fashion by non-criminal justice terminals.

(*b*) Operation programs are used that will prohibit inquiry, record updates, or destruction of records, from any terminal other than criminal justice system terminals which are so designated.

(*c*) The destruction of records is limited to designated terminals under the direct control of the criminal justice agency responsible for creating or storing the criminal history record information.

(*d*) Operational programs are used to detect and store for the output of designated criminal justice agency employees all unauthorized attempts to penetrate any criminal history record information system, program or file.

(*e*) The programs specified in paragraphs (f)(3)(i) (*b*) and (*d*) of this section are known only to criminal justice agency employees responsible for criminal history record information system control or individuals and agencies pursuant to a specific agreement with the criminal justice agency to provide such programs and the program(s) are kept continuously under maximum security conditions.

(*f*) Procedures are instituted to assure that an individual or agency authorized direct access is responsible for (*1*) the physical security of criminal history record information under its control or in its custody and (*2*) the protection of such information from unauthorized access, disclosure or dissemination.

(*g*) Procedures are instituted to protect any central repository of criminal history record information from unauthorized access, theft, sabotage, fire, flood, wind, or other natural or manmade disasters.

(ii) A criminal justice agency shall have the right to audit, monitor and inspect procedures established above.

(4) The criminal justice agency will:

(i) Screen and have the right to reject for employment, based on good cause, all personnel to be authorized to have direct access to criminal history record information.

(ii) Have the right to initiate or cause to be initiated administrative action leading to the transfer or removal of personnel authorized to have direct access to such information where such personnel violate the provisions of these regulations or other security requirements established for the collection, storage, or dissemination of criminal history record information.

(iii) Institute procedures, where computer processing is not utilized, to assure that an individual or agency authorized direct access is responsible for

(*a*) The physical security of criminal history record information under its control or in its custody and

(*b*) The protection of such information from unauthorized access, disclosure, or dissemination.

(iv) Institute procedures, where computer processing is not utilized, to protect any central repository of criminal history record information from unauthorized access, theft, sabotage, fire, flood, wind, or other natural or manmade disasters.

(v) Provide that direct access to criminal history record information shall be available only to authorized officers or employees of a criminal justice agency and, as necessary, other authorized personnel essential to the proper operation of the criminal history record information system.

(5) Each employee working with or having access to criminal history record information shall be made familiar with the substance and intent of these regulations.

(g) *Access and review*. Insure the individual's right to access and review of criminal history information for purposes of accuracy and completeness by instituting procedures so that—

(1) Any individual shall, upon satisfactory verification of his identity, be entitled to review without undue burden to either the criminal justice agency or the individual, any criminal history record information maintained about the individual and obtain a copy thereof when necessary for the purpose of challenge or correction;

(2) Administrative review and necessary correction of any claim by the individual to whom the information relates that the information is inaccurate or incomplete is provided;

(3) The State shall establish and implement procedures for administrative appeal where a criminal justice agency refuses to correct challenged information to the satisfaction of the individual to whom the information relates;

(4) Upon request, an individual whose record has been corrected shall be given the names of all non-criminal justice agencies to whom the data has been given;

(5) The correcting agency shall notify all criminal justice recipients of corrected information; and

(6) The individual's right to access and review of criminal history record information shall not extend to data contained in intelligence, investigatory, or other related files and shall not be construed to include any other information than that defined by § 20.3(b).

[41 FR 11715, Mar. 19, 1976, as amended at 42 FR 61595, Dec. 6, 1977]

§ 20.22 Certification of compliance.

(a) Each State to which these regulations are applicable shall with the submission of its plan provide a certification that to the maximum extent feasible action has been taken to comply with the procedures set forth in the plan. Maximum extent feasible, in this subsection, means actions which can be

taken to comply with the procedures set forth in the plan that do not require additional legislative authority or involve unreasonable cost or do not exceed existing technical ability.

(b) The certification shall include—

(1) An outline of the action which has been instituted. At a minimum, the requirements of access and review under § 20.21(g) must be completely operational;

(2) A description of any legislation or executive order, or attempts to obtain such authority that has been instituted to comply with these regulations;

(3) A description of the steps taken to overcome any fiscal, technical, and administrative barriers to the development of complete and accurate criminal history record information;

(4) A description of existing system capability and steps being taken to upgrade such capability to meet the requirements of these regulations; and

(5) A listing setting forth categories of non-criminal justice dissemination. See § 20.21(b).

§ 20.23 Documentation: Approval by OJARS.

Within 90 days of the receipt of the plan, OJARS shall approve or disapprove the adequacy of the provisions of the plan and certification. Evaluation of the plan by OJARS will be based upon whether the procedures set forth will accomplish the required objectives. The evaluation of the certification(s) will be based upon whether a good faith effort has been shown to initiate and/or further compliance with the plan and regulations. All procedures in the approved plan must be fully operational and implemented by March 1, 1978. A final certification shall be submitted on March 1, 1978.

Where a State finds it is unable to provide final certification that all required procedures as set forth in § 20.21 will be operational by March 1, 1978, a further extension of the deadline will be granted by OJARS upon a showing that the State has made a good faith effort to implement these regulations to the maximum extent feasible. Documentation justifying the request for the extension including a proposed timetable for full compliance must be submitted to OJARS by March 1, 1978. Where a State submits a request for an extension, the implementation date will be extended an additional 90 days while OJARS reviews the documentation for approval or disapproval. To be approved, such revised schedule must be consistent with the timetable and procedures set out below:

(a) July 31, 1978—Submission of certificate of compliance with:

(1) Individual access, challenge, and review requirements;

(2) Administrative security;

(3) Physical security to the maximum extent feasible.

(b) Thirty days after the end of a State's next legislative session—Submission to OJARS of a description of State policy on dissemination of criminal history record information.

(c) Six months after the end of a State's legislative session—Submission to OJARS of a brief and concise description of standards and operating procedures to be followed by all criminal justice agencies covered by OJARS regulations in complying with the State policy on dissemination.

(d) Eighteen months after the end of a State's legislative session—Submission to OJARS of a certificate attesting to the conduct of an audit of the State central repository and of a random number of other criminal justice agencies in compliance with OJARS regulations.

[41 FR 11715, Mar. 19, 1976, as amended at 42 FR 61596, Dec. 6, 1977]

§ 20.24 State laws on privacy and security.

Where a State originating criminal history record information provides for sealing or purging thereof, nothing in these regulations shall be construed to prevent any other State receiving such information, upon notification, from complying with the originating State's sealing or purging requirements.

§ 20.25 Penalties.

Any agency or individual violating subpart B of these regulations shall be subject to a civil penalty not to exceed $10,000 for a violation occurring before September 29, 1999, and not to exceed $11,000 for a violation occurring on after September 29, 1999. In addition,

OJARS may initiate fund cut-off procedures against recipients of OJARS assistance.

[41 FR 11715, Mar. 19, 1976, as amended by Order No. 2249–99, 64 FR 47102, Aug. 30, 1999]

Subpart C—Federal Systems and Exchange of Criminal History Record Information

SOURCE: Order No. 2258–99, 64 FR 52227, Sept. 28, 1999, unless otherwise noted.

§ 20.30 Applicability.

The provisions of this subpart of the regulations apply to the III System and the FIRS, and to duly authorized local, state, tribal, federal, foreign, and international criminal justice agencies to the extent that they utilize the services of the III System or the FIRS. This subpart is applicable to both manual and automated criminal history records.

§ 20.31 Responsibilities.

(a) The Federal Bureau of Investigation (FBI) shall manage the NCIC.

(b) The FBI shall manage the FIRS to support identification and criminal history record information functions for local, state, tribal, and federal criminal justice agencies, and for noncriminal justice agencies and other entities where authorized by federal statute, state statute pursuant to Public Law 92–544, 86 Stat. 1115, Presidential executive order, or regulation or order of the Attorney General of the United States.

(c) The FBI CJIS Division may manage or utilize additional telecommunication facilities for the exchange of fingerprints, criminal history record related information, and other criminal justice information.

(d) The FBI CJIS Division shall maintain the master fingerprint files on all offenders included in the III System and the FIRS for the purposes of determining first offender status; to identify those offenders who are unknown in states where they become criminally active but are known in other states through prior criminal history records; and to provide identification assistance in disasters and for other humanitarian purposes.

§ 20.32 Includable offenses.

(a) Criminal history record information maintained in the III System and the FIRS shall include serious and/or significant adult and juvenile offenses.

(b) The FIRS excludes arrests and court actions concerning nonserious offenses, e.g., drunkenness, vagrancy, disturbing the peace, curfew violation, loitering, false fire alarm, non-specific charges of suspicion or investigation, and traffic violations (except data will be included on arrests for vehicular manslaughter, driving under the influence of drugs or liquor, and hit and run), when unaccompanied by a § 20.32(a) offense. These exclusions may not be applicable to criminal history records maintained in state criminal history record repositories, including those states participating in the NFF.

(c) The exclusions enumerated above shall not apply to federal manual criminal history record information collected, maintained, and compiled by the FBI prior to the effective date of this subpart.

§ 20.33 Dissemination of criminal history record information.

(a) Criminal history record information contained in the III System and the FIRS may be made available:

(1) To criminal justice agencies for criminal justice purposes, which purposes include the screening of employees or applicants for employment hired by criminal justice agencies;

(2) To federal agencies authorized to receive it pursuant to federal statute or Executive order;

(3) For use in connection with licensing or employment, pursuant to Public Law 92–544, 86 Stat. 1115, or other federal legislation, and for other uses for which dissemination is authorized by federal law. Refer to § 50.12 of this chapter for dissemination guidelines relating to requests processed under this paragraph;

(4) For issuance of press releases and publicity designed to effect the apprehension of wanted persons in connection with serious or significant offenses;

(5) To criminal justice agencies for the conduct of background checks under the National Instant Criminal Background Check System (NICS);

(6) To noncriminal justice governmental agencies performing criminal justice dispatching functions or data processing/ information services for criminal justice agencies; and

(7) To private contractors pursuant to a specific agreement with an agency identified in paragraphs (a)(1) or (a)(6) of this section and for the purpose of providing services for the administration of criminal justice pursuant to that agreement. The agreement must incorporate a security addendum approved by the Attorney General of the United States, which shall specifically authorize access to criminal history record information, limit the use of the information to the purposes for which it is provided, ensure the security and confidentiality of the information consistent with these regulations, provide for sanctions, and contain such other provisions as the Attorney General may require. The power and authority of the Attorney General hereunder shall be exercised by the FBI Director (or the Director's designee).

(b) The exchange of criminal history record information authorized by paragraph (a) of this section is subject to cancellation if dissemination is made outside the receiving departments, related agencies, or service providers identified in paragraphs (a)(6) and (a)(7) of this section.

(c) Nothing in these regulations prevents a criminal justice agency from disclosing to the public factual information concerning the status of an investigation, the apprehension, arrest, release, or prosecution of an individual, the adjudication of charges, or the correctional status of an individual, which is reasonably contemporaneous with the event to which the information relates.

(d) Criminal history records received from the III System or the FIRS shall be used only for the purpose requested and a current record should be requested when needed for a subsequent authorized use.

§ 20.34 Individual's right to access criminal history record information.

The procedures by which an individual may obtain a copy of his or her identification record from the FBI to review and request any change, correction, or update are set forth in §§ 16.30–16.34 of this chapter. The procedures by which an individual may obtain a copy of his or her identification record from a state or local criminal justice agency are set forth in § 20.34 of the appendix to this part.

§ 20.35 Criminal Justice Information Services Advisory Policy Board.

(a) There is established a CJIS Advisory Policy Board, the purpose of which is to recommend to the FBI Director general policy with respect to the philosophy, concept, and operational principles of various criminal justice information systems managed by the FBI's CJIS Division.

(b) The Board includes representatives from state and local criminal justice agencies; members of the judicial, prosecutorial, and correctional segments of the criminal justice community; a representative of federal agencies participating in the CJIS systems; and representatives of criminal justice professional associations.

(c) All members of the Board will be appointed by the FBI Director.

(d) The Board functions solely as an advisory body in compliance with the provisions of the Federal Advisory Committee Act. Title 5, United States Code, Appendix 2.

§ 20.36 Participation in the Interstate Identification Index System.

(a) In order to acquire and retain direct access to the III System, each Control Terminal Agency and Federal Service Coordinator shall execute a CJIS User Agreement (or its functional equivalent) with the Assistant Director in Charge of the CJIS Division, FBI, to abide by all present rules, policies, and procedures of the NCIC, as well as any rules, policies, and procedures hereinafter recommended by the CJIS Advisory Policy Board and adopted by the FBI Director.

(b) Entry or updating of criminal history record information in the III System will be accepted only from state or federal agencies authorized by the FBI. Terminal devices in other agencies will be limited to inquiries.

§ 20.37 Responsibility for accuracy, completeness, currency, and integrity.

It shall be the responsibility of each criminal justice agency contributing data to the III System and the FIRS to assure that information on individuals is kept complete, accurate, and current so that all such records shall contain to the maximum extent feasible dispositions for all arrest data included therein. Dispositions should be submitted by criminal justice agencies within 120 days after the disposition has occurred.

§ 20.38 Sanction for noncompliance.

Access to systems managed or maintained by the FBI is subject to cancellation in regard to any agency or entity that fails to comply with the provisions of subpart C of this part.

APPENDIX TO PART 20—COMMENTARY ON SELECTED SECTIONS OF THE REGULATIONS ON CRIMINAL HISTORY RECORD INFORMATION SYSTEMS

Subpart A–§ 20.3(d). The definition of criminal history record information is intended to include the basic offender-based transaction statistics/III System (OBTS/III) data elements. If notations of an arrest, disposition, or other formal criminal justice transaction occurs in records other than the traditional ''rap sheet,'' such as arrest reports, any criminal history record information contained in such reports comes under the definition of this subsection.

The definition, however, does not extend to other information contained in criminal justice agency reports. Intelligence or investigative information (e.g., suspected criminal activity, associates, hangouts, financial information, and ownership of property and vehicles) is not included in the definition of criminal history information.

§ 20.3(g). The definitions of criminal justice agency and administration of criminal justice in § 20.3(b) of this part must be considered together. Included as criminal justice agencies would be traditional police, courts, and corrections agencies, as well as subunits of noncriminal justice agencies that perform the administration of criminal justice pursuant to a federal or state statute or executive order and allocate a substantial portion of their budgets to the administration of criminal justice. The above subunits of noncriminal justice agencies would include, for example, the Office of Investigation of the Food and Drug Administration, which has as its principal function the detection and apprehension of persons violating criminal provisions of the Federal Food, Drug and Cosmetic Act. Also included under the definition of criminal justice agency are umbrella-type administrative agencies supplying criminal history information services, such as New York's Division of Criminal Justice Services.

§ 20.3(i). Disposition is a key concept in section 524(b) of the Act and in §§ 20.21(a)(1) and 20.21(b) of this part. It therefore is defined in some detail. The specific dispositions listed in this subsection are examples only and are not to be construed as excluding other, unspecified transactions concluding criminal proceedings within a particular agency.

§ 20.3(q). The different kinds of acquittals and dismissals delineated in § 20.3(i) are all considered examples of nonconviction data.

Subpart B—§ 20.20(a). These regulations apply to criminal justice agencies receiving funds under the Omnibus Crime Control and Safe Streets Act for manual or automated systems subsequent to July 1, 1973. In the hearings on the regulations, a number of those testifying challenged LEAA's authority to promulgate regulations for manual systems by contending that section 524(b) of the Act governs criminal history information contained in automated systems.

The intent of section 524(b), however, would be subverted by only regulating automated systems. Any agency that wished to circumvent the regulations would be able to create duplicate manual files for purposes contrary to the letter and spirit of the regulations.

Regulation of manual systems, therefore, is authorized by section 524(b) when coupled with section 501 of the Act which authorizes the Administration to establish rules and regulations ''necessary to the exercise of its functions * * *.''

The Act clearly applies to all criminal history record information collected, stored, or disseminated with LEAA support subsequent to July 1, 1973.

Limitations as contained in subpart C also apply to information obtained from the FBI Identification Division or the FBI/NCIC System.

§ 20.20 (b) and (c). Section 20.20 (b) and (c) exempts from regulations certain types of records vital to the apprehension of fugitives, freedom of the press, and the public's right to know. Court records of public judicial proceedings are also exempt from the provisions of the regulations.

Section 20.20(b)(2) attempts to deal with the problem of computerized police blotters. In some local jurisdictions, it is apparently possible for private individuals and/or newsmen upon submission of a specific name to obtain through a computer search of the blotter a history of a person's arrests. Such files create a partial criminal history data

bank potentially damaging to individual privacy, especially since they do not contain final dispositions. By requiring that such records be accessed solely on a chronological basis, the regulations limit inquiries to specific time periods and discourage general fishing expeditions into a person's private life.

Subsection 20.20(c) recognizes that announcements of ongoing developments in the criminal justice process should not be precluded from public disclosure. Thus, announcements of arrest, convictions, new developments in the course of an investigation may be made. It is also permissible for a criminal justice agency to confirm certain matters of public record information upon specific inquiry. Thus, if a question is raised: ''Was X arrested by your agency on January 3, 1975'' and this can be confirmed or denied by looking at one of the records enumerated in subsection (b) above, then the criminal justice agency may respond to the inquiry. Conviction data as stated in §20.21(b) may be disseminated without limitation.

§20.21. The regulations deliberately refrain from specifying who within a State should be responsible for preparing the plan. This specific determination should be made by the Governor. The State has 90 days from the publication of these revised regulations to submit the portion of the plan covering §§20.21(b) and 20.21(f).

§20.21(a)(1). Section 524(b) of the Act requires that LEAA insure criminal history information be current and that, to the maximum extent feasible, it contain disposition as well as current data.

It is, however, economically and administratively impractical to maintain complete criminal histories at the local level. Arrangements for local police departments to keep track of dispositions by agencies outside of the local jurisdictions generally do not exist. It would, moreover, be bad public policy to encourage such arrangements since it would result in an expensive duplication of files.

The alternatives to locally kept criminal histories are records maintained by a central State repository. A central State repository is a State agency having the function pursuant to a statute or executive order of maintaining comprehensive statewide criminal history record information files. Ultimately, through automatic data processing the State level will have the capability to handle all requests for in-State criminal history information.

Section 20.20(a)(1) is written with a centralized State criminal history repository in mind. The first sentence of the subsection states that complete records should be retained at a central State repository. The word ''should'' is permissive; it suggests but does not mandate a central State repository.

The regulations do require that States establish procedures for State and local criminal justice agencies to query central State repositories wherever they exist. Such procedures are intended to insure that the most current criminal justice information is used.

As a minimum, criminal justice agencies subject to these regulations must make inquiries of central State repositories whenever the repository is capable of meeting the user's request within a reasonable time. Presently, comprehensive records of an individual's transactions within a State are maintained in manual files at the State level, if at all. It is probably unrealistic to expect manual systems to be able immediately to meet many rapid-access needs of police and prosecutors. On the other hand, queries of the State central repository for most noncriminal justice purposes probably can and should be made prior to dissemination of criminal history record information.

§20.21(b). The limitations on dissemination in this subsection are essential to fulfill the mandate of section 524(b) of the Act which requires the Administration to assure that the ''privacy of all information is adequately provided for and that information shall only be used for law enforcement and criminal justice and other lawful purposes.'' The categories for dissemination established in this section reflect suggestions by hearing witnesses and respondents submitting written commentary.

The regulations distinguish between conviction and nonconviction information insofar as dissemination is concerned. Conviction information is currently made available without limitation in many jurisdictions. Under these regulations, conviction data and pending charges could continue to be disseminated routinely. No statute, ordinance, executive order, or court rule is necessary in order to authorize dissemination of conviction data. However, nothing in the regulations shall be construed to negate a State law limiting such dissemination.

After December 31, 1977, dissemination of nonconviction data would be allowed, if authorized by a statute, ordinance, executive order, or court rule, decision, or order. The December 31, 1977, deadline allows the States time to review and determine the kinds of dissemination for non-criminal justice purposes to be authorized. When a State enacts comprehensive legislation in this area, such legislation will govern dissemination by local jurisdictions within the State. It is possible for a public record law which has been construed by the State to authorize access to the public of all State records, including criminal history record information, to be considered as statutory authority under this subsection. Federal legislation and executive orders can also authorize dissemination and would be relevant authority.

For example, Civil Service suitability investigations are conducted under Executive Order 10450. This is the authority for most investigations conducted by the Commission. Section 3(a) of 10450 prescribes the minimum scope of investigation and requires a check of FBI fingerprint files and written inquiries to appropriate law enforcement agencies.

§ 20.21(b)(3). This subsection would permit private agencies such as the Vera Institute to receive criminal histories where they perform a necessary administration of justice function such as pretrial release. Private consulting firms which commonly assist criminal justice agencies in information systems development would also be included here.

§ 20.21(b)(4). Under this subsection, any good faith researchers including private individuals would be permitted to use criminal history record information for research purposes. As with the agencies designated in § 20.21(b)(3) researchers would be bound by an agreement with the disseminating criminal justice agency and would, of course, be subject to the sanctions of the Act.

The drafters of the regulations expressly rejected a suggestion which would have limited access for research purposes to certified research organizations. Specifically ''certification'' criteria would have been extremely difficult to draft and would have inevitably led to unnecessary restrictions on legitimate research.

Section 524(a) of the Act which forms part of the requirements of this section states:

''Except as provided by Federal law other than this title, no officer or employee of the Federal Government, nor any recipient of assistance under the provisions of this title shall use or reveal any research or statistical information furnished under this title by any person and identifiable to any specific private person for any purpose other than the purpose for which it was obtained in accordance with this title. Copies of such information shall be immune from legal process, and shall not, without the consent of the person furnishing such information, be admitted as evidence or used for any purpose in any action suit, or other judicial or administrative proceedings.''

LEAA anticipates issuing regulations, pursuant to section 524(a) as soon as possible.

§ 20.21(c)(2). Presently some employers are circumventing State and local dissemination restrictions by requesting applicants to obtain an official certification of no criminal record. An employer's request under the above circumstances gives the applicant the unenviable choice of invasion of his privacy or loss of possible job opportunities. Under this subsection routine certifications of no record would no longer be permitted. In extraordinary circumstances, however, an individual could obtain a court order permitting such a certification.

§ 20.21(c)(3). The language of this subsection leaves to the States the question of who among the agencies and individuals listed in § 20.21(b) shall actually receive criminal records. Under these regulations a State could place a total ban on dissemination if it so wished. The State could, on the other hand, enact laws authorizing any member of the private sector to have access to non-conviction data.

§ 20.21(d). Non-criminal justice agencies will not be able to receive records of juveniles unless the language of a statute or court order, rule, or court decision specifies that juvenile records shall be available for dissemination. Perhaps the most controversial part of this subsection is that it denies access to records of juveniles by Federal agencies conducting background investigations for eligibility to classified information under existing legal authority.

§ 20.21(e) Since it would be too costly to audit each criminal justice agency in most States (Wisconsin, for example, has 1075 criminal justice agencies) random audits of a ''representative sample'' of agencies are the next best alternative. The term ''representative sample'' is used to insure that audits do not simply focus on certain types of agencies. Although this subsection requires that there be records kept with the names of all persons or agencies to whom information is disseminated, criminal justice agencies are not required to maintain dissemination logs for ''no record'' responses.

§ 20.21(f). Requirements are set forth which the States must meet in order to assure that criminal history record information is adequately protected. Automated systems may operate in shared environments and the regulations require certain minimum assurances.

§ 20.21(g)(1). A ''challenge'' under this section is an oral or written contention by an individual that his record is inaccurate or incomplete; it would require him to give a correct version of his record and explain why he believes his version to be correct. While an individual should have access to his record for review, a copy of the record should ordinarily only be given when it is clearly established that it is necessary for the purpose of challenge.

The drafters of the subsection expressly rejected a suggestion that would have called for a satisfactory verification of identity by fingerprint comparison. It was felt that States ought to be free to determine other means of identity verification.

§ 20.21(g)(5). Not every agency will have done this in the past, but henceforth adequate records including those required under 20.21(e) must be kept so that notification can be made.

§ 20.21(g)(6). This section emphasizes that the right to access and review extends only to criminal history record information and does not include other information such as intelligence or treatment data.

§ 20.22(a). The purpose for the certification requirement is to indicate the extent of compliance with these regulations. The term ''maximum extent feasible'' acknowledges that there are some areas such as the completeness requirement which create complex legislative and financial problems.

NOTE: In preparing the plans required by these regulations, States should look for guidance to the following documents: National Advisory Commission on Criminal Justice Standards and Goals, Report on the Criminal Justice System; Project SEARCH: Security and Privacy Considerations in Criminal History Information Systems, Technical Reports No. 2 and No. 13; Project SEARCH: A Model State Act for Criminal Offender Record Information, Technical Memorandum No. 3; and Project SEARCH: Model Administrative Regulations for Criminal Offender Record Information, Technical Memorandum No. 4.

Subpart C–§ 20.31. This section defines the criminal history record information system managed by the Federal Bureau of Investigation. Each state having a record in the III System must have fingerprints on file in the FBI CJIS Division to support the III System record concerning the individual.

Paragraph (b) is not intended to limit the identification services presently performed by the FBI for local, state, tribal, and federal agencies.

§ 20.32. The grandfather clause contained in paragraph (c) of this section is designed, from a practical standpoint, to eliminate the necessity of deleting from the FBI's massive files the non-includable offenses that were stored prior to February, 1973. In the event a person is charged in court with a serious or significant offense arising out of an arrest involving a non-includable offense, the non-includable offense will also appear in the arrest segment of the III System record.

§ 20.33(a)(3). This paragraph incorporates provisions cited in 28 CFR 50.12 regarding dissemination of identification records outside the federal government for noncriminal justice purposes.

§ 20.33(a)(6). Noncriminal justice governmental agencies are sometimes tasked to perform criminal justice dispatching functions or data processing/information services for criminal justice agencies as part, albeit not a principal part, of their responsibilities. Although such inter-governmental delegated tasks involve the administration of criminal justice, performance of those tasks does not convert an otherwise non-criminal justice agency to a criminal justice agency. This regulation authorizes this type of delegation if it is effected pursuant to executive order, statute, regulation, or interagency agreement. In this context, the noncriminal justice agency is servicing the criminal justice agency by performing an administration of criminal justice function and is permitted access to criminal history record information to accomplish that limited function. An example of such delegation would be the Pennsylvania Department of Administration's Bureau of Consolidated Computer Services, which performs data processing for several state agencies, including the Pennsylvania State Police. Privatization of the data processing/information services or dispatching function by the noncriminal justice governmental agency can be accomplished pursuant to § 20.33(a)(7) of this part.

§ 20.34. The procedures by which an individual may obtain a copy of his manual identification record are set forth in 28 CFR 16.30–16.34.

The procedures by which an individual may obtain a copy of his III System record are as follows: If an individual has a criminal record supported by fingerprints and that record has been entered in the III System, it is available to that individual for review, upon presentation of appropriate identification, and in accordance with applicable state and federal administrative and statutory regulations. Appropriate identification includes being fingerprinted for the purpose of insuring that he is the individual that he purports to be. The record on file will then be verified as his through comparison of fingerprints.

Procedure. 1. All requests for review must be made by the subject of the record through a law enforcement agency which has access to the III System. That agency within statutory or regulatory limits can require additional identification to assist in securing a positive identification.

2. If the cooperating law enforcement agency can make an identification with fingerprints previously taken which are on file locally and if the FBI identification number of the individual's record is available to that agency, it can make an on-line inquiry through NCIC to obtain his III System record or, if it does not have suitable equipment to obtain an on-line response, obtain the record from Clarksburg, West Virginia, by mail. The individual will then be afforded the opportunity to see that record.

3. Should the cooperating law enforcement agency not have the individual's fingerprints on file locally, it is necessary for that agency to relate his prints to an existing record by having his identification prints compared with those already on file in the FBI, or, possibly, in the state's central identification agency.

4. The subject of the requested record shall request the appropriate arresting agency,

court, or correctional agency to initiate action necessary to correct any stated inaccuracy in his record or provide the information needed to make the record complete.

§ 20.36. This section refers to the requirements for obtaining direct access to the III System.

§ 20.37. The 120-day requirement in this section allows 30 days more than the similar provision in subpart B in order to allow for processing time that may be needed by the states before forwarding the disposition to the FBI.

[Order No. 662–76, 41 FR 34949, Aug. 18, 1976, as amended by Order No. 1438–90, 55 FR 32075, Aug. 7, 1990; Order No. 2258–99, 64 FR 52229, Sept. 28, 1999]

PART 21—WITNESS FEES

Sec.
21.1 Definitions.
21.2 Employees of the United States serving as witnesses.
21.3 Aliens.
21.4 Fees and allowances of fact witnesses.
21.5 Use of table of distances.
21.6 Proceedings *in forma pauperis*.
21.7 Certification of witness attendance.

AUTHORITY: 28 U.S.C. 509, 510, 1821–1825, 5 U.S.C. 301.

SOURCE: 51 FR 16171, May 1, 1986, unless otherwise noted.

§ 21.1 Definitions.

(a) *Agency proceeding*. An agency process as defined by 5 U.S.C. 551 (5), (7) and (9).

(b) *Alien*. Any person who is not a citizen or national of the United States.

(c) *Judicial proceeding*. Any action or suit, including any condemnation, preliminary, informational or other proceeding of a judicial nature. Examples of the latter include, but are not limited to, hearings and conferences before a committing court, magistrate, or commission, grand jury proceedings, pre-trial conferences, depositions, and coroners' inquests. It does not include information or investigative proceedings conducted by a prosecuting attorney for the purpose of determining whether an information or charge should be made in a particular case. The judicial proceeding may be in the District of Columbia, a State, or a territory or possession of the United States including the Commonwealth of Puerto Rico or the Trust Territory of the Pacific Islands.

(d) *Pre-trial conference*. A conference between the Government Attorney and a witness to discuss the witness' testimony. The conference must take place after a trial, hearing or grand jury proceeding has been scheduled but prior to the witness' actual appearance at the proceeding.

(e) *Residence*. The term *residence* is not limited to the legal residence, but includes any place at which the witness is actually residing and at which the subpoena or summons is served. If the residence of the witness at the time of appearance is different from the place of subpoena or summons, the new place of residence shall be considered the witness' residence for computation of the transportation allowance; but, if the witness is on a business or vacation trip at the time of appearance, the witness shall be paid for travel from the place of service if this does not result in the witness being paid for more travel than is actually performed.

(f) *Summons*. An official request, invitation or call, evidenced by an official writing of the court, authority, or party responsible for the conduct of the proceeding.

§ 21.2 Employees of the United States serving as witnesses.

(a) *Applicability*. This section applies to employees of the United States as defined by 5 U.S.C. 2105, except those whose pay is disbursed by the Secretary of the Senate or the Clerk of the House of Representatives.

(b) *Entitlement to travel expenses*—(1) *Official capacity*. An employee is entitled to travel expenses (in accordance with § 21.2(c)) in connection with any judicial or agency proceeding with respect to which the employee is summoned (and is authorized by the employee's agency to respond to such summons), or is assigned by his or her agency:

(i) To testify or produce official records on behalf of the United States, or

(ii) To testify in his or her official capacity or produce official records on behalf of a party other than the United States.

The witness appropriation of the Department of Justice is not available for

expenses incurred under these conditions.

(2) *Unofficial capacity, federal involvement.* An employee is entitled to travel expenses (in accordance with paragraph (c) of this section) in connection with any judicial or agency proceeding with respect to which the employee is summoned to testify on behalf of the United States. If an employee is summoned to testify on behalf of a party other than the United States, the employee's travel expenses shall be payable by the court, authority, or party which caused the employee to be summoned.

(3) *Unofficial capacity, no Federal involvement.* An employee who appears as a witness in any judicial proceeding in an unofficial capacity in which there is no Federal involvement is not authorized Government travel expenses and may retain reimbursement for expenses which he or she receives from the court, authority or party which caused the employee to be summoned.

(c) *Allowable travel expenses.* An employee qualifying for payment of travel expenses by virtue of being called in an official capacity or on behalf of the United States shall be paid at rates and in amounts allowable for other purposes under the provisions of 5 U.S.C. 5702–5705 and applicable regulations prescribed thereunder by the Administrator, General Services, and the employing agency. Such payment shall be reduced to the extent that the travel expenses are paid to the employee for his or her appearance by the court, authority, or party which caused the employee to be summoned as a witness in an official capacity on behalf of a party other than the United States.

(d) *Payment and reimbursement*—(1) *Payable by the employing agency.* If an employee serves as a witness, and the case involves the activity in connection with which he or she is employed, the travel expenses are payable from the appropriation of the employing agency. The Comptroller General has defined the extent to which the case must be related to the agency's activity as a condition to the agency's responsibility for payment in 23 Comp. Gen. 47, 49 (1943), which states ''the employing agency is required to pay . . . the traveling expenses incurred by the witness only where the information or facts ascertained by the employee as part of his official duties forms the basis of the case, or where the proceeding is predicated upon a law that that agency is required to administer.'' In 39 Comp. Gen. 1, 2 (1959), the Comptroller General determined that if an employee testifies regarding facts and information he or she acquires in the course of his or her assigned duties, the employing agency is responsible for the payment of the employee's travel expenses. In these instances, the witness appropriation of the Department of Justice is not available for payment of expenses.

(2) *Payable by the Department of Justice.* If an employee appears on behalf of the United States in an unofficial capacity in a judicial proceeding involving the Department of Justice, the employee's travel expenses are payable by the Department of Justice. The employing agency may advance or pay the travel expenses of the employee and later obtain reimbursement from the Department of Justice by submitting an appropriate bill together with a copy of the approved advance or travel voucher.

(e) *Leave and attendance fee*—(1) *Leave.* An employee is considered to be in official duty status when appearing as a witness in his or her official capacity or on behalf of the United States in an unofficial capacity. An employee is entitled to court leave when he or she appears as a witness in an unofficial capacity not on behalf of the United States, and the United States, the District of Columbia, or a State or local government is a party to the case. An employee must use annual leave or leave without pay to appear as a witness when the United States, the District of Columbia, or a State or local government is not a party.

(2) *Attendance fee.* An employee who appears on behalf of the United States is not entitled to receive an attendance fee. An employee who appears on behalf of a party other than the United States while in official duty status or while on court leave should request an attendance fee from the court, authority, or party which caused the employee to be summoned. Such fee shall be remitted to the employing agency. An employee

who must use annual leave or leave without pay to appear as a witness may retain an attendance fee which he or she receives.

§ 21.3 Aliens.

(a) *Aliens entitled to payment of $30 per day*. The following aliens are entitled to witness fees and allowances provided in § 21.4:

(1) Aliens lawfully admitted for permanent residence (documentary evidence: Form I–151 or Form 1–551, Alien Registration Receipt Card);

(2) Aliens lawfully admitted in one of the nonimmigrant categories described in 8 U.S.C. 1101(a)(15) (documentary evidence: unexpired Form 1–94, Arrival-Departure Record). But see below § 21.3(b);

(3) Aliens admitted as refugees under 8 U.S.C. 1157 and aliens granted asylum under 8 U.S.C. 1158 (documentary evidence: Form I–94, Arrival Departure Record, indicating admission as refugee under 8 U.S.C. 1157 or granting asylum under 8 U.S.C. 1158, employment authorized);

(4) Aliens who have rendered themselves amenable to deportation proceedings, but have not admitted deportability or have not been determined to be deportable pursuant to section 242 of the Immigration and Nationality Act (8 U.S.C. 1252).

(b) *Aliens entitled to payment of $1 per day*. An alien who is ''excludable'' in accordance with 8 U.S.C. 1226, but whose removal is stayed by the Attorney General (in accordance with 8 U.S.C. 1227(d)) because:

(1) The testimony of the alien is necessary on behalf of the United States in the prosecution of offenders against the United States, or

(2) The testimony of the alien is necessary on behalf of an indigent criminal defendant in accordance with Rule 17(b) of the Federal Rules of Criminal Procedures,

is entitled to a $1 per day witness fee. No other fees and allowances are authorized.

(c) *Aliens not entitled to payment*. An alien who has been paroled into the United States for prosecution pursuant to 8 U.S.C. 1182(d)(5) (documentary evidence: Form I–94, Arrival-Departure Record, Parole Edition), or an alien who has admitted belonging to a class of aliens who are deportable, or an alien who has been determined pursuant to 8 U.S.C. 1252(b) to be deportable (documentary evidence: decision by a Special Inquiry Officer, Board of Immigration Appeals, or court), is prohibited from receiving fees and allowances in accordance with 28 U.S.C. 1821(e).

(d) *Doubtful cases*. If the Immigration and Naturalization Service advises that the alien has admitted deportability, or that he or she was paroled into the United States for prosecution, or that deportation proceedings have been completed against the alien with a result favorable to the Government, no payment under 28 U.S.C. 1821 may be made.

§ 21.4 Fees and allowances of fact witnesses.

The fees and allowances of fact witnesses, other than those covered by § 21.2, attending at any judicial proceeding, shall be a follows:

(a) *Fee*. A witness shall be paid an attendance fee of $30 per day for each day's attendance. A witness shall also be paid the attendance fee for the time necessarily occupied in going to and returning from the place of attendance. However, if both attendance and travel occur on the same day, a witness is entitled to only one fee.

(b) *Allowable transportation expenses*. A witness shall be entitled to transportation expenses based on the means of transportation reasonably utilized (based on the nature, duration, location and distance of travel) and the distance necessarily traveled from and to such witness' residence by the shortest practical route and the fastest means of transportation available in going to and returning from the place of attendance. Additional costs incurred (including attendance fees and subsistence allowances) because of a slower means of transportation must be justified for consideration.

(1) A witness who travels by regularly scheduled common carrier shall be paid for the actual expenses of transportation at the most economical rate reasonably available. A receipt or other evidence of actual cost shall be furnished.

(2) A witness who travels by privately owned vehicle shall be paid a transportation allowance equal to the mileage allowance paid for official travel of employees of the Federal Government under the provisions of 5 U.S.C. 5704. However, when two or more witnesses travel in the same privately owned vehicle, only the witness incurring the expense shall receive the mileage allowance.

(3) A witness incurring incidental transportation expenses, such as taxi fares between the place of attendance, residence or lodging and the carrier terminals; bridge, road and tunnel tolls; ferry fares; and parking fees shall be paid in full for such expenses. Receipts or other evidence of actual payment are required for *all parking fees* (if available) and all other single items costing more than $25.

(4) First-class travel by witnesses requires the same justification and approval required for first-class travel by employees of the Federal Government.

(c) *Subsistence allowance.* A witness (other than a witness detained *in custody*) who is required to be away from his or her residence *overnight* is entitled to a subsistence allowance. A witness who *is not* required to be away from his or her residence overnight *is not* entitled to a subsistence allowance. The witness' subsistence allowance shall not exceed either the per diem rate or the actual subsistence allowance rate prescribed for Government employees for the place of attendance. These rates are established by the Administrator, General Services, for areas within the conterminous United States; the Secretary of Defense for areas of the United States other than conterminous; or the Secretary of State as published in the Standardized Regulations (Government Civilians, Foreign Areas) for foreign areas. The witness' subsistence allowance shall consist of a meal and miscellaneous expense portion and a lodging portion. *When an overnight stay is required,* the witness shall be entitled to:

(1) The meal and miscellaneous expense portion for each day (or partial day) the witness is required to remain away from his or her residence and

(2) The lodging portion for each night the witness is required to incur a lodging expense.

The meal and miscellaneous expense portion shall be 50% of the authorized subsistence allowance rate rounded to the next whole dollar in an actual subsistence rate area, or 45% of the per diem rate rounded to the next whole dollar in a per diem area. The lodging portion shall be the difference between the meal and miscellaneous expense portion and the authorized rate.

(d) *Detained witness fee.* A witness (other than an alien covered by §21.3) detained *in custody* pursuant to 18 U.S.C. 3149 for want of security for his or her appearance shall receive subsistence *in kind* and shall be paid a single daily attendance fee for each day the witness is detained. A witness in custody for purposes other than 18 U.S.C. 3149 is ineligible to receive the attendance and subsistence fees provided by this section.

§21.5 Use of table of distances.

Mileage payable to witnesses under 28 U.S.C. 1821 shall be computed on the basis of odometer readings or the highway distances as stated in the Rand McNally Standard Highway Mileage Guide or in any generally accepted highway mileage guide which contains a shortline nationwide table of distances. However, with respect to travel in areas for which no such highway mileage guide exists, mileage payable under 28 U.S.C. 1821 shall be based on the lesser of either (a) the route of travel actually employed or (b) a usually traveled route.

§21.6 Proceedings *in forma pauperis.*

Title 28 U.S.C. 1915 provides for the commencement, prosecution or defense of any suit, action, or proceeding without prepayment of fees and costs. Witnesses shall attend as in other cases.

(a) *Civil cases.* There are currently no provisions for payment of witnesses called by the indigent. If the indigent party prevails, witness fees and expenses may be taxed as costs in accordance with 28 U.S.C. 1920.

(b) *Criminal cases.* Rule 17(b), Federal Rules of Criminal Procedure, requires that fact witnesses *subpoenaed* on behalf of an indigent defendant be paid in

the same manner as witnesses called on behalf of the Government. The attendance must be certified by the presiding officer of the court. The expenses of Federal Government employees are treated in the same manner as they are treated when the employee is called by a Government attorney.

§ 21.7 Certification of witness attendance.

In any case in which the U.S. Department of Justice, or office or organization thereof, is a party, the Department of Justice shall pay all fees and allowances of witnesses, except for those witnesses as defined in § 21.2, paragraph (d)(1), on the certification of the following officials: The U.S. Attorney, an Assistant U.S. Attorney, a U.S. Trustee, or the U.S. Department of Justice attorney who actually conducts the case. In criminal proceedings *in forma pauperis* or in proceedings before a U.S. Commissioner, U.S. Magistrate or U.S. Parole Commission Hearing Examiner, the Department of Justice shall pay all fees and allowances of witnesses on the certification of the U.S. District Judge hearing the case or such Commissioner, Magistrate, or Hearing Examiner.

PART 22—CONFIDENTIALITY OF IDENTIFIABLE RESEARCH AND STATISTICAL INFORMATION

Sec.
22.1 Purpose.
22.2 Definitions.
22.20 Applicability.
22.21 Use of identifiable data.
22.22 Revelation of identifiable data.
22.23 Privacy certification.
22.24 Information transfer agreement.
22.25 Final disposition of identifiable materials.
22.26 Requests for transfer of information.
22.27 Notification.
22.28 Use of data identifiable to a private person for judicial, legislative or administrative purposes.
22.29 Sanctions.

AUTHORITY: Secs. 801(a), 812(a), Omnibus Crime Control and Safe Streets Act of 1968, 42 U.S.C. 3701, *et seq.*, as amended (Pub. L. 90–351, as amended by Pub. L. 93–83, Pub. L. 93–415, Pub. L. 94–430, Pub. L. 94–503, Pub. L. 95–115, Pub. L. 96–157, and Pub. L. 98–473); secs. 262(b), 262(d), Juvenile Justice and Delinquency Prevention Act of 1974, 42 U.S.C. 5601, *et seq.*, as amended (Pub. L. 93–415, as amended by Pub. L. 94–503, Pub. L. 95–115, Pub. L. 99–509, and Pub. L. 98–473); and secs. 1407(a) and 1407(d) of the Victims of Crime Act of 1984, 42 U.S.C. 10601, *et seq.*, Pub. L. 98–473; Pub. L. 101–410, 104 Stat. 890, as amended by Pub. L. 104–134, 110 Stat. 1321.

SOURCE: 41 FR 54846, Dec. 15, 1976, unless otherwise noted.

§ 22.1 Purpose.

The purpose of these regulations is to:

(a) Protect privacy of individuals by requiring that information identifiable to a private person obtained in a research or statistical program may only be used and/or revealed for the purpose for which obtained;

(b) Insure that copies of such information shall not, without the consent of the person to whom the information pertains, be admitted as evidence or used for any purpose in any judicial or administrative proceedings;

(c) Increase the credibility and reliability of federally-supported research and statistical findings by minimizing subject concern over subsequent uses of identifiable information;

(d) Provide needed guidance to persons engaged in research and statistical activities by clarifying the purposes for which identifiable information may be used or revealed; and

(e) Insure appropriate balance between individual privacy and essential needs of the research community for data to advance the state of knowledge in the area of criminal justice.

(f) Insure the confidentiality of information provided by crime victims to crisis intervention counselors working for victim services programs receiving funds provided under the Crime Control Act, and Juvenile Justice Act, and the Victims of Crime Act.

[41 FR 54846, Dec. 15, 1976, as amended at 51 FR 6400, Feb. 24, 1986]

§ 22.2 Definitions.

(a) *Person* means any individual, partnership, corporation, association, public or private organization or governmental entity, or combination thereof.

(b) *Private person* means any person defined in § 22.2(a) other than an agency, or department of Federal, State, or

local government, or any component or combination thereof. Included as a private person is an individual acting in his or her official capacity.

(c) *Research or statistical project* means any program, project, or component thereof which is supported in whole or in part with funds appropriated under the Act and whose purpose is to develop, measure, evaluate, or otherwise advance the state of knowledge in a particular area. The term does not include ''intelligence'' or other information-gathering activities in which information pertaining to specific individuals is obtained for purposes directly related to enforcement of the criminal laws.

(d) *Research or statistical information* means any information which is collected during the conduct of a research or statistical project and which is intended to be utilized for research or statistical purposes. The term includes information which is collected directly from the individual or obtained from any agency or individual having possession, knowledge, or control thereof.

(e) *Information identifiable to a private person* means information which either—

(1) Is labelled by name or other personal identifiers, or

(2) Can, by virtue of sample size or other factors, be reasonably interpreted as referring to a particular private person.

(f) *Recipient of assistance* means any recipient of a grant, contract, interagency agreement, subgrant, or subcontract under the Act and any person, including subcontractors, employed by such recipient in connection with performances of the grant, contract, or interagency agreement.

(g) *Officer or employee of the Federal Government* means any person employed as a regular or special employee of the U.S. (including experts, consultants, and advisory board members) as of July 1, 1973, or at any time thereafter.

(h) *The act* means the Omnibus Crime Control and Safe Streets Act of 1968, as amended.

(i) *Applicant* means any person who applies for a grant, contract, or subgrant to be funded pursuant to the Act.

(j) *The Juvenile Justice Act* means the ''Juvenile Justice and Delinquency Prevention Act of 1974, as amended.''

(k) *The Victims of Crime Act* means the Victims of Crime Act of 1984.

[41 FR 54846, Dec. 15, 1976, as amended at 43 FR 16974, Apr. 21, 1978; 51 FR 6400, Feb. 24, 1986]

§ 22.20 Applicability.

(a) These regulations govern use and revelation of research and statistical information obtained, collected, or produced either directly by BJA, OJJDP, BJS, NIJ, or OJP or under any interagency agreement, grant, contract, or subgrant awarded under the Crime Control Act, the Juvenile Justice Act, and the Victims of Crime Act.

(b) The regulations do not apply to any records from which identifiable research or statistical information was originally obtained; or to any records which are designated under existing statutes as public; or to any information extracted from any records designated as public.

(c) The regulations do not apply to information gained regarding future criminal conduct.

[41 FR 54846, Dec. 15, 1976, as amended at 43 FR 16974, Apr. 21, 1978; 51 FR 6400, 6401, Feb. 24, 1986]

§ 22.21 Use of identifiable data.

Research or statistical information identifiable to a private person may be used only for research or statistical purposes.

§ 22.22 Revelation of identifiable data.

(a) Except as noted in paragraph (b) of this section, research and statistical information relating to a private person may be revealed in identifiable form on a need-to-know basis only to—

(1) Officers, employees, and subcontractors of the recipient of assistance;

(2) Such individuals as needed to implement sections 202(c)(3), 801, and 811(b) of the Act; and sections 223(a)(12)(A), 223(a)(13), 223(a)(14), and 243 of the Juvenile Justice and Delinquency Prevention Act.

(3) Persons or organizations for research or statistical purposes. Information may only be transferred for such

purposes upon a clear demonstration that the standards of § 22.26 have been met and that, except where information is transferred under paragraphs (a)(1) and (2) of this section, such transfers shall be conditioned on compliance with a § 22.24 agreement.

(b) Information may be revealed in identifiable form where prior consent is obtained from an individual or where the individual has agreed to participate in a project with knowledge that the findings cannot, by virtue of sample size, or uniqueness of subject, be expected to totally conceal subject identity.

[41 FR 54846, Dec. 15, 1976, as amended at 51 FR 6400, Feb. 24, 1986]

§ 22.23 Privacy certification.

(a) Each applicant for BJA, OJJDP, BJS, NIJ, or OJP support either directly or under a State plan shall submit a Privacy Certificate as a condition of approval of a grant application or contract proposal which has a research or statistical project component under which information identifiable to a private person will be collected.

(b) The Privacy Certificate shall briefly describe the project and shall contain assurance by the applicant that:

(1) Data identifiable to a private person will not be used or revealed, except as authorized under §§ 22.21, 22.22.

(2) Access to data will be limited to those employees having a need therefore and that such persons shall be advised of and agree in writing to comply with these regulations.

(3) All subcontracts which require access to identifiable data will contain conditions meeting the requirements of § 22.24.

(4) To the extent required by § 22.27 any private persons from whom identifiable data are collected or obtained, either orally or by means of written questionnaire, shall be advised that the data will only be used or revealed for research or statistical purposes and that compliance with requests for information is not mandatory. Where the notification requirement is to be waived, pursuant to § 22.27(c), a justification must be included in the Privacy Certificate.

(5) Adequate precautions will be taken to insure administrative and physical security of identifiable data.

(6) A log will be maintained indicating that identifiable data have been transmitted to persons other than BJA, OJJDP, BJS, NIJ, or OJP or grantee/contractor staff or subcontractors, that such data have been returned, or that alternative arrangements have been agreed upon for future maintenance of such data.

(7) Project plans will be designed to preserve anonymity of private persons to whom information relates, including, where appropriate, name-stripping, coding of data, or other similar procedures.

(8) Project findings and reports prepared for dissemination will not contain information which can reasonably be expected to be identifiable to a private person except as authorized under § 22.22.

(c) The applicant shall attach to the Privacy Certification a description of physical and/or administrative procedures to be followed to insure the security of the data to meet the requirements of § 22.25.

[41 FR 5486, Dec. 15, 1976, as amended at 51 FR 6401, Feb. 24, 1986]

§ 22.24 Information transfer agreement.

Prior to the transfer of any identifiable information to persons other than BJA, OJJDP, BJS, NIJ, or OJP or project staff, an agreement shall be entered into which shall provide, as a minimum, that the recipient of data agrees that:

(a) Information identifiable to a private person will be used only for research and statistical purposes.

(b) Information identifiable to a private person will not be revealed to any person for any purpose except where the information has already been included in research findings (and/or data bases) and is revealed on a need-to-know basis for research or statistical purposes, provided that such transfer is approved by the person providing information under the agreement, or authorized under § 22.24(e).

(c) Knowingly and willfully using or disseminating information contrary to the provisions of the agreement shall

constitute a violation of these regulations, punishable in accordance with the Act.

(d) Adequate administrative and physical precautions will be taken to assure security of information obtained for such purpose.

(e) Access to information will be limited to those employees or subcontractors having a need therefore in connection with performance of the activity for which obtained, and that such persons shall be advised of, and agree to comply with, these regulations.

(f) Project plans will be designed to preserve anonymity of private persons to whom information relates, including, where appropriate, required name-stripping and/or coding of data or other similar procedures.

(g) Project findings and reports prepared for dissemination will not contain information which can reasonably be expected to be identifiable to a private person.

(h) Information identifiable to a private person (obtained in accordance with this agreement) will, unless otherwise agreed upon, be returned upon completion of the project for which obtained and no copies of that information retained.

[41 FR 5486, Dec. 15, 1976, as amended at 51 FR 6401, Feb. 24, 1986]

§ 22.25 Final disposition of identifiable materials.

Upon completion of a research or statistical project the security of identifiable research or statistical information shall be protected by:

(a) Complete physical destruction of all copies of the materials or the identifiable portion of such materials after a three-year required recipient retention period or as soon as authorized by law, or

(b) Removal of identifiers from data and separate maintenance of a name-code index in a secure location.

The Privacy Certificate shall indicate the procedures to be followed and shall, in the case of paragraph (b) of this section, describe procedures to secure the name index.

§ 22.26 Requests for transfer of information.

(a) Requests for transfer of information identifiable to an individual shall be submitted to the person submitting the Privacy Certificate pursuant to § 22.23.

(b) Except where information is requested by BJA, OJJDP, BJS, NIJ, or OJP, the request shall describe the general objectives of the project for which information is requested, and specifically justify the need for such information in identifiable form. The request shall also indicate, and provide justification for the conclusion that conduct of the project will not, either directly or indirectly, cause legal, economic, physical, or social harm to individuals whose identification is revealed in the transfer of information.

(c) Data may not be transferred pursuant to this section where a clear showing of the criteria set forth above is not made by the person requesting the data.

[41 FR 5486, Dec. 15, 1976, as amended at 51 FR 6401, Feb. 24, 1986]

§ 22.27 Notification.

(a) Any person from whom information identifiable to a private person is to be obtained directly, either orally, by questionnaire, or other written documents, shall be advised:

(1) That the information will only be used or revealed for research or statistical purposes; and

(2) That compliance with the request for information is entirely voluntary and may be terminated at any time.

(b) Except as noted in paragraph (c) of this section, where information is to be obtained through observation of individual activity or performance, such individuals shall be advised:

(1) Of the particular types of information to be collected;

(2) That the data will only be utilized or revealed for research or statistical purposes; and

(3) That participation in the project in question is voluntary and may be terminated at any time.

(c) Notification, as described in paragraph (b) of this section, may be eliminated where information is obtained through field observation of individual activity or performance and in the

judgment of the researcher such notification is impractical or may seriously impede the progress of the research.

(d) Where findings in a project cannot, by virtue of sample size, or uniqueness of subject, be expected to totally conceal subject identity, an individual shall be so advised.

§ 22.28 Use of data identifiable to a private person for judicial, legislative or administrative purposes.

(a) Research or statistical information identifiable to a private person shall be immune from legal process and shall only be admitted as evidence or used for any purpose in any action, suit, or other judicial, legislative or administrative proceeding with the written consent of the individual to whom the data pertains.

(b) Where consent is obtained, such consent shall:

(1) Be obtained at the time that information is sought for use in judicial, legislative or administrative proceedings;

(2) Set out specific purposes in connection with which information will be used;

(3) Limit, where appropriate, the scope of the information subject to such consent.

[41 FR 54846, Dec. 15, 1976, as amended at 45 FR 62038, Sept. 18, 1980]

§ 22.29 Sanctions.

Where BJA, OJJDP, BJS, NIJ, or OJP believes that a violation of section 812(a) of the Act or section 1407(d) of the Victims of Crime Act, these regulations, or any grant or contract conditions entered into thereunder has occurred, it may initiate administrative actions leading to termination of a grant or contract, commence appropriate personnel and/or other procedures in cases involving Federal employees, and/or initiate appropriate legal actions leading to imposition of a civil penalty not to exceed $10,000 for a violation occurring before September 29, 1999, and not to exceed $11,000 for a violation occurring on or after September 29, 1999 against any person responsible for such violations.

[Order No. 2249–99, 64 FR 47102, Aug. 30, 1999]

PART 23—CRIMINAL INTELLIGENCE SYSTEMS OPERATING POLICIES

Sec.
23.1 Purpose.
23.2 Background.
23.3 Applicability.
23.20 Operating principles.
23.30 Funding guidelines.
23.40 Monitoring and auditing of grants for the funding of intelligence systems.

AUTHORITY: 42 U.S.C. 3782(a); 42 U.S.C. 3789g(c).

SOURCE: 58 FR 48452, Sept. 16, 1993, unless otherwise noted.

§ 23.1 Purpose.

The purpose of this regulation is to assure that all criminal intelligence systems operating through support under the Omnibus Crime Control and Safe Streets Act of 1968, 42 U.S.C. 3711, *et seq.*, as amended (Pub. L. 90–351, as amended by Pub. L. 91–644, Pub. L. 93–83, Pub. L. 93–415, Pub. L. 94–430, Pub. L. 94–503, Pub. L. 95–115, Pub. L. 96–157, Pub. L. 98–473, Pub. L. 99–570, Pub. L. 100–690, and Pub. L. 101–647), are utilized in conformance with the privacy and constitutional rights of individuals.

§ 23.2 Background.

It is recognized that certain criminal activities including but not limited to loan sharking, drug trafficking, trafficking in stolen property, gambling, extortion, smuggling, bribery, and corruption of public officials often involve some degree of regular coordination and permanent organization involving a large number of participants over a broad geographical area. The exposure of such ongoing networks of criminal activity can be aided by the pooling of information about such activities. However, because the collection and exchange of intelligence data necessary to support control of serious criminal activity may represent potential threats to the privacy of individuals to whom such data relates, policy guidelines for Federally funded projects are required.

§ 23.3 Applicability.

(a) These policy standards are applicable to all criminal intelligence systems operating through support under

the Omnibus Crime Control and Safe Streets Act of 1968, 42 U.S.C. 3711, *et seq.*, as amended (Pub. L. 90–351, as amended by Pub. L. 91–644, Pub. L. 93–83, Pub. L. 93–415, Pub. L. 94–430, Pub. L. 94–503, Pub. L. 95–115, Pub. L. 96–157, Pub. L. 98–473, Pub. L. 99–570, Pub. L. 100–690, and Pub. L. 101–647).

(b) As used in these policies:

(1) *Criminal Intelligence System* or *Intelligence System* means the arrangements, equipment, facilities, and procedures used for the receipt, storage, interagency exchange or dissemination, and analysis of criminal intelligence information;

(2) *Interjurisdictional Intelligence System* means an intelligence system which involves two or more participating agencies representing different governmental units or jurisdictions;

(3) *Criminal Intelligence Information* means data which has been evaluated to determine that it:

(i) Is relevant to the identification of and the criminal activity engaged in by an individual who or organization which is reasonably suspected of involvement in criminal activity, and

(ii) Meets criminal intelligence system submission criteria;

(4) *Participating Agency* means an agency of local, county, State, Federal, or other governmental unit which exercises law enforcement or criminal investigation authority and which is authorized to submit and receive criminal intelligence information through an interjurisdictional intelligence system. A participating agency may be a member or a nonmember of an interjurisdictional intelligence system;

(5) *Intelligence Project* or *Project* means the organizational unit which operates an intelligence system on behalf of and for the benefit of a single agency or the organization which operates an interjurisdictional intelligence system on behalf of a group of participating agencies; and

(6) *Validation of Information* means the procedures governing the periodic review of criminal intelligence information to assure its continuing compliance with system submission criteria established by regulation or program policy.

§ 23.20 Operating principles.

(a) A project shall collect and maintain criminal intelligence information concerning an individual only if there is reasonable suspicion that the individual is involved in criminal conduct or activity and the information is relevant to that criminal conduct or activity.

(b) A project shall not collect or maintain criminal intelligence information about the political, religious or social views, associations, or activities of any individual or any group, association, corporation, business, partnership, or other organization unless such information directly relates to criminal conduct or activity and there is reasonable suspicion that the subject of the information is or may be involved in criminal conduct or activity.

(c) *Reasonable Suspicion* or *Criminal Predicate* is established when information exists which establishes sufficient facts to give a trained law enforcement or criminal investigative agency officer, investigator, or employee a basis to believe that there is a reasonable possibility that an individual or organization is involved in a definable criminal activity or enterprise. In an interjurisdictional intelligence system, the project is responsible for establishing the existence of reasonable suspicion of criminal activity either through examination of supporting information submitted by a participating agency or by delegation of this responsibility to a properly trained participating agency which is subject to routine inspection and audit procedures established by the project.

(d) A project shall not include in any criminal intelligence system information which has been obtained in violation of any applicable Federal, State, or local law or ordinance. In an interjurisdictional intelligence system, the project is responsible for establishing that no information is entered in violation of Federal, State, or local laws, either through examination of supporting information submitted by a participating agency or by delegation of this responsibility to a properly trained participating agency which is subject to routine inspection and audit procedures established by the project.

(e) A project or authorized recipient shall disseminate criminal intelligence information only where there is a need to know and a right to know the information in the performance of a law enforcement activity.

(f)(1) Except as noted in paragraph (f)(2) of this section, a project shall disseminate criminal intelligence information only to law enforcement authorities who shall agree to follow procedures regarding information receipt, maintenance, security, and dissemination which are consistent with these principles.

(2) Paragraph (f)(1) of this section shall not limit the dissemination of an assessment of criminal intelligence information to a government official or to any other individual, when necessary, to avoid imminent danger to life or property.

(g) A project maintaining criminal intelligence information shall ensure that administrative, technical, and physical safeguards (including audit trails) are adopted to insure against unauthorized access and against intentional or unintentional damage. A record indicating who has been given information, the reason for release of the information, and the date of each dissemination outside the project shall be kept. Information shall be labeled to indicate levels of sensitivity, levels of confidence, and the identity of submitting agencies and control officials. Each project must establish written definitions for the need to know and right to know standards for dissemination to other agencies as provided in paragraph (e) of this section. The project is responsible for establishing the existence of an inquirer's need to know and right to know the information being requested either through inquiry or by delegation of this responsibility to a properly trained participating agency which is subject to routine inspection and audit procedures established by the project. Each intelligence project shall assure that the following security requirements are implemented:

(1) Where appropriate, projects must adopt effective and technologically advanced computer software and hardware designs to prevent unauthorized access to the information contained in the system;

(2) The project must restrict access to its facilities, operating environment and documentation to organizations and personnel authorized by the project;

(3) The project must store information in the system in a manner such that it cannot be modified, destroyed, accessed, or purged without authorization;

(4) The project must institute procedures to protect criminal intelligence information from unauthorized access, theft, sabotage, fire, flood, or other natural or manmade disaster;

(5) The project must promulgate rules and regulations based on good cause for implementing its authority to screen, reject for employment, transfer, or remove personnel authorized to have direct access to the system; and

(6) A project may authorize and utilize remote (off-premises) system data bases to the extent that they comply with these security requirements.

(h) All projects shall adopt procedures to assure that all information which is retained by a project has relevancy and importance. Such procedures shall provide for the periodic review of information and the destruction of any information which is misleading, obsolete or otherwise unreliable and shall require that any recipient agencies be advised of such changes which involve errors or corrections. All information retained as a result of this review must reflect the name of the reviewer, date of review and explanation of decision to retain. Information retained in the system must be reviewed and validated for continuing compliance with system submission criteria before the expiration of its retention period, which in no event shall be longer than five (5) years.

(i) If funds awarded under the Act are used to support the operation of an intelligence system, then:

(1) No project shall make direct remote terminal access to intelligence information available to system participants, except as specifically approved by the Office of Justice Programs (OJP) based on a determination that the system has adequate policies

and procedures in place to insure that it is accessible only to authorized systems users; and

(2) A project shall undertake no major modifications to system design without prior grantor agency approval.

(ii) [Reserved]

(j) A project shall notify the grantor agency prior to initiation of formal information exchange procedures with any Federal, State, regional, or other information systems not indicated in the grant documents as initially approved at time of award.

(k) A project shall make assurances that there will be no purchase or use in the course of the project of any electronic, mechanical, or other device for surveillance purposes that is in violation of the provisions of the Electronic Communications Privacy Act of 1986, Public Law 99–508, 18 U.S.C. 2510–2520, 2701–2709 and 3121–3125, or any applicable State statute related to wiretapping and surveillance.

(l) A project shall make assurances that there will be no harassment or interference with any lawful political activities as part of the intelligence operation.

(m) A project shall adopt sanctions for unauthorized access, utilization, or disclosure of information contained in the system.

(n) A participating agency of an interjurisdictional intelligence system must maintain in its agency files information which documents each submission to the system and supports compliance with project entry criteria. Participating agency files supporting system submissions must be made available for reasonable audit and inspection by project representatives. Project representatives will conduct participating agency inspection and audit in such a manner so as to protect the confidentiality and sensitivity of participating agency intelligence records.

(o) The Attorney General or designee may waive, in whole or in part, the applicability of a particular requirement or requirements contained in this part with respect to a criminal intelligence system, or for a class of submitters or users of such system, upon a clear and convincing showing that such waiver would enhance the collection, maintenance or dissemination of information in the criminal intelligence system, while ensuring that such system would not be utilized in violation of the privacy and constitutional rights of individuals or any applicable state or federal law.

§ 23.30 Funding guidelines.

The following funding guidelines shall apply to all Crime Control Act funded discretionary assistance awards and Bureau of Justice Assistance (BJA) formula grant program subgrants, a purpose of which is to support the operation of an intelligence system. Intelligence systems shall only be funded where a grantee/subgrantee agrees to adhere to the principles set forth above and the project meets the following criteria:

(a) The proposed collection and exchange of criminal intelligence information has been coordinated with and will support ongoing or proposed investigatory or prosecutorial activities relating to specific areas of criminal activity.

(b) The areas of criminal activity for which intelligence information is to be utilized represent a significant and recognized threat to the population and:

(1) Are either undertaken for the purpose of seeking illegal power or profits or pose a threat to the life and property of citizens; and

(2) Involve a significant degree of permanent criminal organization; or

(3) Are not limited to one jurisdiction.

(c) The head of a government agency or an individual with general policy making authority who has been expressly delegated such control and supervision by the head of the agency will retain control and supervision of information collection and dissemination for the criminal intelligence system. This official shall certify in writing that he or she takes full responsibility and will be accountable for the information maintained by and disseminated from the system and that the operation of the system will be in compliance with the principles set forth in § 23.20.

(d)(1) Where the system is an interjurisdictional criminal intelligence system, the governmental agency

which exercises control and supervision over the operation of the system shall require that the head of that agency or an individual with general policy-making authority who has been expressly delegated such control and supervision by the head of the agency:

(i) Assume official responsibility and accountability for actions taken in the name of the joint entity, and

(ii) Certify in writing that the official takes full responsibility and will be accountable for insuring that the information transmitted to the interjurisdictional system or to participating agencies will be in compliance with the principles set forth in § 23.20.

(2) The principles set forth in § 23.20 shall be made part of the by-laws or operating procedures for that system. Each participating agency, as a condition of participation, must accept in writing those principles which govern the submission, maintenance and dissemination of information included as part of the interjurisdictional system.

(e) Intelligence information will be collected, maintained and disseminated primarily for State and local law enforcement efforts, including efforts involving Federal participation.

§ 23.40 Monitoring and auditing of grants for the funding of intelligence systems.

(a) Awards for the funding of intelligence systems will receive specialized monitoring and audit in accordance with a plan designed to insure compliance with operating principles as set forth in § 23.20. The plan shall be approved prior to award of funds.

(b) All such awards shall be subject to a special condition requiring compliance with the principles set forth in § 23.20.

(c) An annual notice will be published by OJP which will indicate the existence and the objective of all systems for the continuing interjurisdictional exchange of criminal intelligence information which are subject to the 28 CFR part 23 Criminal Intelligence Systems Policies.

PART 24—IMPLEMENTATION OF THE EQUAL ACCESS TO JUSTICE ACT IN DEPARTMENT OF JUSTICE ADMINISTRATIVE PROCEEDINGS

Subpart A—General Provisions

Sec.
24.101 Purpose of these rules.
24.102 Definitions.
24.103 Proceedings covered.
24.104 Applicability to Department of Justice proceedings.
24.105 Eligibility of applicants.
24.106 Standards for awards.
24.107 Allowable fees and other expenses.

Subpart B—Information Required From Applicants

24.201 Contents of application.
24.202 Net worth exhibit.
24.203 Documentation of fees and expenses.
24.204 Time for submission of application.

Subpart C—Procedures for Considering Applications

24.301 Filing and service of documents.
24.302 Answer to application.
24.303 Comments by other parties.
24.304 Settlement.
24.305 Extensions of time.
24.306 Decision on application.
24.307 Department review.
24.308 Judicial review.
24.309 Payment of award.

AUTHORITY: 5 U.S.C. 504(c)(1).

SOURCE: Order No. 975–82, 47 FR 15776, Apr. 13, 1982, unless otherwise noted.

Subpart A—General Provisions

§ 24.101 Purpose of these rules.

These rules are adopted by the Department of Justice pursuant to section 504 of title 5, U.S. Code, as amended by section 203(a)(1) of the Equal Access to Justice Act, Public Law No. 96–481. Under the Act, an eligible party may receive an award for attorney fees and other expenses when it prevails over the Department in an adversary adjudication under 5 U.S.C. 554 before the Department, unless the Department's position as a party to the proceeding was substantially justified or special circumstances make an award unjust. The purpose of these rules is to establish procedures for the submission and consideration of applications for awards against the Department.

§ 24.102 Definitions.

As used in this part:

(a) *The Act* means section 504 of title 5, U.S. Code, as amended by section 203(a)(1) of the Equal Access to Justice Act, Public Law No. 96–481.

(b) *Adversary adjudication* means an adjudication under 5 U.S.C. 554 in which the position of the United States is represented by counsel or otherwise, but excludes an adjudication for the purpose of establishing or fixing a rate or for the purpose of granting or reviewing a license.

(c) *Adjudicative officer* means the official, without regard to whether the official is designated as an administrative law judge, a hearing officer or examiner, or otherwise, who presided at the adversary adjudication.

(d) *Department* refers to the relevant departmental component which is conducting the adversary adjudication (e.g., Drug Enforcement Administration or Office of Justice Assistance, Research, and Statistics).

(e) *Proceeding* means an adversary adjudication as defined in § 24.102(b) above.

§ 24.103 Proceedings covered.

(a) These rules apply to adversary adjudications required by statute to be conducted by the Department under 5 U.S.C. 554. Specifically, the proceedings conducted by the Department to which these rules apply are:

(1) Hearings conducted by the Drug Enforcement Administration (DEA) in connection with suspension or revocation of registration of manufacturers, distributors, and dispensers of controlled substances under 21 U.S.C. 824(c) and 21 CFR 1301.51; suspension or revocation of import and export registrations pursuant to 21 U.S.C. 958 and 21 CFR 1311.51;

(2) Hearings conducted by DEA in connection with the scheduling of drugs pursuant to 21 U.S.C. 811(a) and 21 CFR 1308.41;

(3) Handicap discrimination hearings conducted by the Department under 29 U.S.C. 794a(a) and 28 CFR 42.109(d);

(4) Title VI civil rights hearings conducted by the Department under 42 U.S.C. 2000d–1 and 28 CFR 42.109(d);

(5) Grant denial and grant termination hearings conducted by the Office of Justice Assistance, Research, and Statistics (OJARS), the National Institute of Justice (NIJ), the Bureau of Justice Statistics (BJS) and the Office of Juvenile Justice and Delinquency Prevention (OJJDP), or the Law Enforcement Assistance Administration (LEAA) under 42 U.S.C. 3783 and 28 CFR part 18; and

(6) Civil rights hearings conducted by OJARS under 42 U.S.C. 3789d and 28 CFR 42.214–15.

(b) If a proceeding includes both matters covered by the Act and matters specifically excluded from coverage, any award made will include only fees and expenses related to covered issues.

§ 24.104 Applicability to Department of Justice proceedings.

The Act applies to an adversary adjudication pending before the Department at any time between October 1, 1981 and September 30, 1984. This includes proceedings begun before October 1, 1981 if final Department action has not been taken before that date, and proceedings pending on September 30, 1984.

§ 24.105 Eligibility of applicants.

(a) To be eligible for an award of attorney fees and other expenses under the Act, the applicant must be a prevailing party in the adversary adjudication for which it seeks an award. The term ''party'' is defined in 5 U.S.C. 551(3). The applicant must show that it meets all conditions of eligibility set out in this subpart and in subpart B.

(b) The types of eligible applicants are as follows:

(1) An individual with a net worth of not more than $1 million;

(2) The sole owner of an unincorporated business who has a net worth of not more than $5 million and not more than 500 employees;

(3) A charitable or other tax-exempt organization described in section 501(c)(3) of the Internal Revenue Code (26 U.S.C. 501(c)(3)) with not more than 500 employees;

(4) A cooperative association as defined in section 15(a) of the Agricultural Marketing Act (12 U.S.C. 1141j(a)) with not more than 500 employees; and

(5) Any other partnership, corporation, association, or public or private

organization with a net worth of not more than $5 million and not more than 500 employees.

(c) For the purpose of eligibility, the net worth and number of employees of an applicant shall be determined as of the date the adversary adjudication was initiated.

§ 24.106 Standards for awards.

(a) A prevailing applicant may receive an award for fees and expenses incurred in connection with a proceeding unless (1) the position of the Department as a party to the proceeding was substantially justified or (2) special circumstances make the award sought unjust. No presumption arises that the agency's position was not substantially justified simply because the agency did not prevail.

(b) An award will be reduced or denied if the applicant has unduly or unreasonably protracted the proceedings.

§ 24.107 Allowable fees and other expenses.

(a) The following fees and other expenses are allowable under the Act:

(1) Reasonable expenses of expert witnesses;

(2) Reasonable cost of any study, analysis, engineering report, test, or project which the Department finds necessary for the preparation of the party's case;

(3) Reasonable attorney or agent fees;

(b) The amount of fees awarded will be based upon the prevailing market rates for the kind and quality of services furnished, except that

(1) Compensation for an expert witness will not exceed the highest rate paid by the Department for expert witnesses; and

(2) Attorney or agent fees will not be in excess of $75 per hour.

Subpart B—Information Required From Applicants

§ 24.201 Contents of application.

(a) An application for an award of fees and expenses under the Act shall identify the applicant and the proceeding for which an award is sought. The application shall show that the applicant has prevailed and identify the position of the Department in the proceeding that the applicant alleges was not substantially justified.

(b) The application shall include a statement that the applicant's net worth as of the time the proceeding was initiated did not exceed $1 million if the applicant is an individual (other than a sole owner of an unincorporated business seeking an award in that capacity) or $5 million in the case of all other applicants. An applicant may omit this statement if:

(1) It attaches a copy of a ruling by the Internal Revenue Service that it qualifies as an organization described in section 501(c)(3) of the Internal Revenue Code of 1954 (26 U.S.C. 501(c)(3)) and is exempt from taxation under section 501(a) of the Code or, in the case of such an organization not required to obtain a ruling from the Internal Revenue Service on its exempt status, a statement that describes the basis for the applicant's belief that it qualifies under section 501(c)(3) of the Code; or

(2) It states that it is a cooperative association as defined in section 15(a) of the Agricultural Marketing Act (12 U.S.C. 1141j(a)).

(c) If the applicant is a partnership, corporation, association, or organization, or a sole owner of an unincorporated business, the application shall state that it did not have more than 500 employees at the time the proceeding was initiated, giving the number of its employees and describing briefly the type and purpose of its organization or business.

(d) The application shall itemize the amount of fees and expenses for which an award is sought.

(e) The application may include any other matters that the applicant believes should be considered in determining whether and in what amount an award should be made.

(f) The application shall be signed by the applicant with respect to the eligibility of the applicant and by the attorney of the applicant with respect to fees and expenses sought. The application shall contain or be accompanied by a written verification under oath or affirmation under penalty of perjury that the information provided in the application and all accompanying material is true and complete to the best of the signer's information and belief.

§ 24.202 Net worth exhibit.

(a) Each applicant except a qualified tax exempt organization or a qualified cooperative must submit with its application a detailed exhibit showing its net worth at the time the proceeding was initiated. If any individual, corporation, or other entity directly or indirectly controls or owns a majority of the voting shares or other interest of the applicant, or if the applicant directly or indirectly owns or controls a majority of the voting shares of other interest of any corporation or other entity, the exhibit must include a showing of the net worth of all such affiliates or of the applicant including the affiliates. The exhibit may be in any form convenient to the applicant, provided that it makes full disclosure of the applicant's and any affiliates' assets and liabilities and is sufficient to determine whether the applicant qualifies under the standards of 5 U.S.C. 504(b)(1)(B)(i). The adjudicative officer may require an applicant to file additional information to determine the applicant's eligibility for an award.

(b) The net worth exhibit shall describe any transfers of assets from, or obligations incurred by, the applicant or any affiliate, occurring in the one-year period prior to the date on which the proceeding was initiated, that reduced the net worth of the applicant and its affiliates below the applicable net worth ceiling. If there were no such transactions, the applicant shall so state.

(c) The net worth exhibit shall be included in the public record of the proceeding.

§ 24.203 Documentation of fees and expenses.

(a) The application shall be accompanied by full documentation of the fees and expenses, including the cost of any study, engineering report, test, or project, for which an award is sought.

(b) The documentation shall include an affidavit from any attorney, agent, or expert witness representing or appearing in behalf of the party, stating the actual time expended and the rate at which fees and other expenses were computed and describing the specific services performed.

(1) The affidavit shall state the services performed. In order to establish the hourly rate, the affidavit shall state the hourly rate which is billed and paid by the majority of clients during the relevant time periods.

(2) If no hourly rate is paid by the majority of clients because, for instance, the attorney or agent represents most clients on a contingency basis, the attorney or agent shall provide information about two attorneys or agents with similar experience, who perform similar work, stating their hourly rate.

(c) The documentation shall also include a description of any expenses for which reimbursement is sought and a statement of the amounts paid and payable by the applicant or by any other person or entity for the services provided.

(d) The adjudicative officer may require the applicant to provide vouchers, receipts, or other substantiation for any expenses claimed.

§ 24.204 Time for submission of application.

(a) An application must be filed no later than 30 days after final disposition of the proceeding. If review or reconsideration is sought or taken of a decision as to which an applicant believes it has prevailed, action on the award of fees shall be stayed pending final disposition of the underlying controversy.

(b) Final disposition means the later of:

(1) The date on which the final agency decision is issued,

(2) The date on which a petition for rehearing or reconsideration is disposed of, or

(3) The date of final resolution of the proceeding, such as settlement or voluntary dismissal, which is not subject to a petition for rehearing or reconsideration.

Subpart C—Procedures for Considering Applications

§ 24.301 Filing and service of documents.

An application for an award and any other pleading or document related to the application shall be filed and

served on all parties to the proceeding in the same manner as other pleadings in the proceeding.

§ 24.302 Answer to application.

(a) Within 30 calendar days after service of the application, Department counsel may file an answer. If Department counsel fails to answer or otherwise fails to contest or settle the application, the adjudicative officer may upon a satisfactory showing of entitlement by the applicant make an award for the applicant's fees and other expenses under 5 U.S.C. 504.

(b) If Department counsel and applicant believe that they can reach a settlement concerning the award, Department counsel may file a statement of intent to negotiate. The filing of such a statement shall extend the time for filing an answer an additional 30 days.

(c) The answer shall explain in detail any objections to the award requested and identify the facts relied on to support the objection. If the answer is based on any alleged facts not already reflected in the record of the proceeding, Department counsel shall include with the answer either a supporting affidavit or a request for further filings or other action.

§ 24.303 Comments by other parties.

Any party to a proceeding other than the applicant and Department counsel may file comments on an application within 30 calendar days after it is served or on an answer within 15 calendar days after it is served.

§ 24.304 Settlement.

A prevailing party and Department counsel may agree on a proposed settlement of an award before final action on the application, either in connection with a settlement of the underlying proceeding or after the underlying proceeding has been concluded. If the party and Department counsel agree on a proposed settlement of an award before an application has been filed, the application shall be filed with the proposed settlement.

§ 24.305 Extensions of time.

(a) The adjudicative officer may on motion and for good cause shown grant extensions of time other than for filing an application for fees and expenses after final disposition in the adversary adjudication.

(b) Ordinarily, the determination of an award will be made on the basis of the written record of the underlying proceeding and the filings required or permitted by the foregoing sections of these rules. However, the adjudicative officer may *sua sponte* or on motion of any party to the proceedings require or permit further filings or other action, such as an informal conference, oral argument, additional written submissions, or an evidentiary hearing. Such further action shall occur only when necessary for full and fair resolution of the issues arising from the application and shall take place as promptly as possible. A motion for further filings or other action shall specifically identify the information sought on the disputed issues and shall explain why the further filings or other action is necessary to resolve the issues.

(c) In the event that an evidentiary hearing is required or permitted by the adjudicative officer, such hearing and any related filings or other action required or permitted shall be conducted pursuant to the procedural rules governing adversary adjudications conducted by the Department component in which the underlying adversary adjudication was conducted.

§ 24.306 Decision on application.

The adjudicative officer shall promptly issue a decision on the application which shall include proposed written findings and conclusions on such of the following as are relevant to the decision:

(a) The applicant's status as a prevailing party;

(b) The applicant's qualification as a ''party'' under 5 U.S.C. 504(b)(1)(B);

(c) Whether the Department's position as a party to the proceeding was substantially justified;

(d) Whether special circumstances make an award unjust;

(e) Whether the applicant during the course of the proceedings engaged in conduct that unduly and unreasonably protracted the final resolution of the matter in controversy; and

(f) The amounts, if any, awarded for fees and other expenses, with reasons

for any difference between the amount requested and the amount awarded.

§ 24.307 Department review.

The decision of the adjudicative officer will be reviewed to the extent permitted by law by the Department in accordance with the Department's procedures for the type of proceeding involved. The Department will issue the final decision on the application.

§ 24.308 Judicial review.

Judicial review of final Department decisions on awards may be sought as provided in 5 U.S.C. 504(c)(2).

§ 24.309 Payment of award.

An applicant seeking payment of an award shall submit a copy of the final decision granting the award to the Department's Accounting Office for processing. A statement that review of the underlying decision is not being sought in the United States courts, or that the process for seeking review of the award has been completed, must also be included.

PART 25—DEPARTMENT OF JUSTICE INFORMATION SYSTEMS

Subpart A—The National Instant Criminal Background Check System

Sec.
25.1 Purpose and authority.
25.2 Definitions.
25.3 System information.
25.4 Record source categories.
25.5 Validation and data integrity of records in the system.
25.6 Accessing records in the system.
25.7 Querying records in the system.
25.8 System safeguards.
25.9 Retention and destruction of records in the system.
25.10 Correction of erroneous system information.
25.11 Prohibited activities and penalties.

AUTHORITY: Pub. L. 103–159, 107 Stat. 1536.

SOURCE: Order No. 2186–98, 63 FR 58307, Oct. 30, 1998, unless otherwise noted.

Subpart A—The National Instant Criminal Background Check System

§ 25.1 Purpose and authority.

The purpose of this subpart is to establish policies and procedures implementing the Brady Handgun Violence Prevention Act (Brady Act), Public Law 103–159, 107 Stat. 1536. The Brady Act requires the Attorney General to establish a National Instant Criminal Background Check System (NICS) to be contacted by any licensed importer, licensed manufacturer, or licensed dealer of firearms for information as to whether the transfer of a firearm to any person who is not licensed under 18 U.S.C. 923 would be in violation of Federal or state law. The regulations in this subpart are issued pursuant to section 103(h) of the Brady Act, 107 Stat. 1542 (18 U.S.C. 922 note), and include requirements to ensure the privacy and security of the NICS and appeals procedures for persons who have been denied the right to obtain a firearm as a result of a NICS background check performed by the Federal Bureau of Investigation (FBI) or a state or local law enforcement agency.

§ 25.2 Definitions.

Appeal means a formal procedure to challenge the denial of a firearm transfer.

ARI means a unique Agency Record Identifier assigned by the agency submitting records for inclusion in the NICS Index.

ATF means the Bureau of Alcohol, Tobacco, and Firearms of the Department of Treasury.

Audit log means a chronological record of system (computer) activities that enables the reconstruction and examination of the sequence of events and/or changes in an event.

Business day means a 24-hour day (beginning at 12:01 a.m.) on which state offices are open in the state in which the proposed firearm transaction is to take place.

Control Terminal Agency means a state or territorial criminal justice agency recognized by the FBI as the agency responsible for providing state- or territory-wide service to criminal justice users of NCIC data.

Data source means an agency that provided specific information to the NICS.

Delayed means the response given to the FFL indicating that the transaction is in an ''Open'' status and that more research is required prior to a NICS ''Proceed'' or ''Denied'' response. A ''Delayed'' response to the FFL indicates that it would be unlawful to transfer the firearm until receipt of a follow-up ''Proceed'' response from the NICS or the expiration of three business days, whichever occurs first.

Denied means denial of a firearm transfer based on a NICS response indicating one or more matching records were found providing information demonstrating that receipt of a firearm by a prospective transferee would violate 18 U.S.C. 922 or state law.

Denying agency means a POC or the NICS Operations Center, whichever determines that information in the NICS indicates that the transfer of a firearm to a person would violate Federal or state law, based on a background check.

Dial-up access means any routine access through commercial switched circuits on a continuous or temporary basis.

Federal agency means any authority of the United States that is an ''Agency'' under 44 U.S.C. 3502(1), other than those considered to be independent regulatory agencies, as defined in 44 U.S.C. 3502(10).

FFL (federal firearms licensee) means a person licensed by the ATF as a manufacturer, dealer, or importer of firearms.

Firearm has the same meaning as in 18 U.S.C. 921(a)(3).

Licensed dealer means any person defined in 27 CFR 178.11.

Licensed importer has the same meaning as in 27 CFR 178.11.

Licensed manufacturer has the same meaning as in 27 CFR 178.11.

NCIC (National Crime Information Center) means the nationwide computerized information system of criminal justice data established by the FBI as a service to local, state, and Federal criminal justice agencies.

NICS means the National Instant Criminal Background Check System, which an FFL must, with limited exceptions, contact for information on whether receipt of a firearm by a person who is not licensed under 18 U.S.C. 923 would violate Federal or state law.

NICS Index means the database, to be managed by the FBI, containing information provided by Federal and state agencies about persons prohibited under Federal law from receiving or possessing a firearm. The NICS Index is separate and apart from the NCIC and the Interstate Identification Index (III).

NICS operational day means the period during which the NICS Operations Center has its daily regular business hours.

NICS Representative means a person who receives telephone inquiries to the NICS Operations Center from FFLs requesting background checks and provides a response as to whether the receipt or transfer of a firearm may proceed or is delayed.

NRI (NICS Record Identifier) means the system-generated unique number associated with each record in the NICS Index.

NTN (NICS Transaction Number) means the unique number that will be assigned to each valid background check inquiry received by the NICS. Its primary purpose will be to provide a means of associating inquiries to the NICS with the responses provided by the NICS to the FFLs.

Open means those non-canceled transactions where the FFL has not been notified of the final determination. In cases of ''open'' responses, the NICS continues researching potentially prohibiting records regarding the transferee and, if definitive information is obtained, communicates to the FFL the final determination that the check resulted in a proceed or a deny. An ''open'' response does not prohibit an FFL from transferring a firearm after three business days have elapsed since the FFL provided to the system the identifying information about the prospective transferee.

ORI (Originating Agency Identifier) means a nine-character identifier assigned by the FBI to an agency that has met the established qualifying criteria for ORI assignment to identify the agency in transactions on the NCIC System.

Originating Agency means an agency that provides a record to a database checked by the NICS.

POC (Point of Contact) means a state or local law enforcement agency serving as an intermediary between an FFL and the federal databases checked by the NICS. A POC will receive NICS background check requests from FFLs, check state or local record systems, perform NICS inquiries, determine whether matching records provide information demonstrating that an individual is disqualified from possessing a firearm under Federal or state law, and respond to FFLs with the results of a NICS background check. A POC will be an agency with express or implied authority to perform POC duties pursuant to state statute, regulation, or executive order.

Proceed means a NICS response indicating that the information available to the system at the time of the response did not demonstrate that transfer of the firearm would violate federal or state law. A ''Proceed'' response would not relieve an FFL from compliance with other provisions of Federal or state law that may be applicable to firearms transfers. For example, under 18 U.S.C. 922(d), an FFL may not lawfully transfer a firearm if he or she knows or has reasonable cause to believe that the prospective recipient is prohibited by law from receiving or possessing a firearm.

Record means any item, collection, or grouping of information about an individual that is maintained by an agency, including but not limited to information that disqualifies the individual from receiving a firearm, and that contains his or her name or other personal identifiers.

STN (State-Assigned Transaction Number) means a unique number that may be assigned by a POC to a valid background check inquiry.

System means the National Instant Criminal Background Check System (NICS).

[Order No. 2186–98, 63 FR 58307, Oct. 30, 1998, as amended by Order No. 2727–2004, 69 FR 43900, July 23, 2004]

§ 25.3 System information.

(a) There is established at the FBI a National Instant Criminal Background Check System.

(b) The system will be based at the Federal Bureau of Investigation, 1000 Custer Hollow Road, Clarksburg, West Virginia 26306–0147.

(c) The system manager and address are: Director, Federal Bureau of Investigation, J. Edgar Hoover F.B.I. Building, 935 Pennsylvania Avenue, NW, Washington, D.C. 20535.

§ 25.4 Record source categories.

It is anticipated that most records in the NICS Index will be obtained from Federal agencies. It is also anticipated that a limited number of authorized state and local law enforcement agencies will voluntarily contribute records to the NICS Index. Information in the NCIC and III systems that will be searched during a background check has been or will be contributed voluntarily by Federal, state, local, and international criminal justice agencies.

§ 25.5 Validation and data integrity of records in the system.

(a) The FBI will be responsible for maintaining data integrity during all NICS operations that are managed and carried out by the FBI. This responsibility includes:

(1) Ensuring the accurate adding, canceling, or modifying of NICS Index records supplied by Federal agencies;

(2) Automatically rejecting any attempted entry of records into the NICS Index that contain detectable invalid data elements;

(3) Automatic purging of records in the NICS Index after they are on file for a prescribed period of time; and

(4) Quality control checks in the form of periodic internal audits by FBI personnel to verify that the information provided to the NICS Index remains valid and correct.

(b) Each data source will be responsible for ensuring the accuracy and validity of the data it provides to the NICS Index and will immediately correct any record determined to be invalid or incorrect.

§ 25.6 Accessing records in the system.

(a) FFLs may initiate a NICS background check only in connection with a proposed firearm transfer as required by the Brady Act. FFLs are strictly prohibited from initiating a NICS background check for any other purpose. The process of accessing the NICS for the purpose of conducting a NICS background check is initiated by an FFL's contacting the FBI NICS Operations Center (by telephone or electronic dial-up access) or a POC. FFLs in each state will be advised by the ATF whether they are required to initiate NICS background checks with the NICS Operations Center or a POC and how they are to do so.

(b) *Access to the NICS through the FBI NICS Operations Center*. FFLs may contact the NICS Operations Center by use of a toll-free telephone number, only during its regular business hours. In addition to telephone access, toll-free electronic dial-up access to the NICS will be provided to FFLs after the beginning of the NICS operation. FFLs with electronic dial-up access will be able to contact the NICS 24 hours each day, excluding scheduled and unscheduled downtime.

(c)(1) The FBI NICS Operations Center, upon receiving an FFL telephone or electronic dial-up request for a background check, will:

(i) Verify the FFL Number and code word;

(ii) Assign a NICS Transaction Number (NTN) to a valid inquiry and provide the NTN to the FFL;

(iii) Search the relevant databases (i.e., NICS Index, NCIC, III) for any matching records; and

(iv) Provide the following NICS responses based upon the consolidated NICS search results to the FFL that requested the background check:

(A) ''Proceed'' response, if no disqualifying information was found in the NICS Index, NCIC, or III.

(B) ''Delayed'' response, if the NICS search finds a record that requires more research to determine whether the prospective transferee is disqualified from possessing a firearm by Federal or state law. A ''Delayed'' response to the FFL indicates that the firearm transfer should not proceed pending receipt of a follow-up ''Proceed'' response from the NICS or the expiration of three business days (exclusive of the day on which the query is made), whichever occurs first. (Example: An FFL requests a NICS check on a prospective firearm transferee at 9:00 a.m. on Friday and shortly thereafter receives a ''Delayed'' response from the NICS. If state offices in the state in which the FFL is located are closed on Saturday and Sunday and open the following Monday, Tuesday, and Wednesday, and the NICS has not yet responded with a ''Proceed'' or ''Denied'' response, the FFL may transfer the firearm at 12:01 a.m. Thursday.)

(C) ''Denied'' response, when at least one matching record is found in either the NICS Index, NCIC, or III that provides information demonstrating that receipt of a firearm by the prospective transferee would violate 18 U.S.C. 922 or state law. The ''Denied'' response will be provided to the requesting FFL by the NICS Operations Center during its regular business hours.

(2) None of the responses provided to the FFL under paragraph (c)(1) of this section will contain any of the underlying information in the records checked by the system.

(d) *Access to the NICS through POCs*. In states where a POC is designated to process background checks for the NICS, FFLs will contact the POC to initiate a NICS background check. Both ATF and the POC will notify FFLs in the POC's state of the means by which FFLs can contact the POC. The NICS will provide POCs with electronic access to the system virtually 24 hours each day through the NCIC communication network. Upon receiving a request for a background check from an FFL, a POC will:

(1) Verify the eligibility of the FFL either by verification of the FFL number or an alternative POC-verification system;

(2) Enter a purpose code indicating that the query of the system is for the purpose of performing a NICS background check in connection with the transfer of a firearm; and (3) Transmit the request for a background check via the NCIC interface to the NICS.

(e) Upon receiving a request for a NICS background check, POCs may also conduct a search of available files

in state and local law enforcement and other relevant record systems, and may provide a unique State-Assigned Transaction Number (STN) to a valid inquiry for a background check.

(f) When the NICS receives an inquiry from a POC, it will search the relevant databases (i.e., NICS Index, NCIC, III) for any matching record(s) and will provide an electronic response to the POC. This response will consolidate the search results of the relevant databases and will include the NTN. The following types of responses may be provided by the NICS to a state or local agency conducting a background check:

(1) No record response, if the NICS determines, through a complete search, that no matching record exists.

(2) Partial response, if the NICS has not completed the search of all of its records. This response will indicate the databases that have been searched (i.e., III, NCIC, and/or NICS Index) and the databases that have not been searched. It will also provide any potentially disqualifying information found in any of the databases searched. A follow-up response will be sent as soon as all the relevant databases have been searched. The follow-up response will provide the complete search results.

(3) Single matching record response, if all records in the relevant databases have been searched and one matching record was found.

(4) Multiple matching record response, if all records in the relevant databases have been searched and more than one matching record was found.

(g) Generally, based on the response(s) provided by the NICS, and other information available in the state and local record systems, a POC will:

(1) Confirm any matching records; and

(2) Notify the FFL that the transfer may proceed, is delayed pending further record analysis, or is denied. ''Proceed'' notifications made within three business days will be accompanied by the NTN or STN traceable to the NTN. The POC may or may not provide a transaction number (NTN or STN) when notifying the FFL of a ''Denied'' response.

(h) *POC Determination Messages.* POCs shall transmit electronic NICS transaction determination messages to the FBI for the following transactions: open transactions that are not resolved before the end of the operational day on which the check is requested; denied transactions; transactions reported to the NICS as open and later changed to proceed; and denied transactions that have been overturned. The FBI shall provide POCs with an electronic capability to transmit this information. These electronic messages shall be provided to the NICS immediately upon communicating the POC determination to the FFL. For transactions where a determination has not been communicated to the FFL, the electronic messages shall be communicated no later than the end of the operational day on which the check was initiated. With the exception of permit checks, newly created POC NICS transactions that are not followed by a determination message (deny or open) before the end of the operational day on which they were initiated will be assumed to have resulted in a proceed notification to the FFL. The information provided in the POC determination messages will be maintained in the NICS Audit Log described in §25.9(b). The NICS will destroy its records regarding POC determinations in accordance with the procedures detailed in §25.9(b).

(i) *Response recording.* FFLs are required to record the system response, whether provided by the FBI NICS Operations Center or a POC, on the appropriate ATF form for audit and inspection purposes, under 27 CFR part 178 recordkeeping requirements. The FBI NICS Operations Center response will always include an NTN and associated ''Proceed,'' ''Delayed,'' or ''Denied'' determination. POC responses may vary as discussed in paragraph (g) of this section. In these instances, FFLs will record the POC response, including any transaction number and/or determination.

(j) *Access to the NICS Index for purposes unrelated to NICS background checks required by the Brady Act.* Access to the NICS Index for purposes unrelated to NICS background checks pursuant to 18 U.S.C. 922(t) shall be limited to uses for the purpose of:

(1) Providing information to Federal, state, or local criminal justice agencies in connection with the issuance of a firearm-related or explosives-related permit or license, including permits or licenses to possess, acquire, or transfer a firearm, or to carry a concealed firearm, or to import, manufacture, deal in, or purchase explosives; or

(2) Responding to an inquiry from the ATF in connection with a civil or criminal law enforcement activity relating to the Gun Control Act (18 U.S.C. Chapter 44) or the National Firearms Act (26 U.S.C. Chapter 53).

[Order No. 2186–98, 63 FR 58307, Oct. 30, 1998, as amended by Order No. 2727–2004, 69 FR 43900, July 23, 2004]

§ 25.7 Querying records in the system.

(a) The following search descriptors will be required in all queries of the system for purposes of a background check:

(1) Name;

(2) Sex;

(3) Race;

(4) Complete date of birth; and

(5) State of residence.

(b) A unique numeric identifier may also be provided to search for additional records based on exact matches by the numeric identifier. Examples of unique numeric identifiers for purposes of this system are: Social Security number (to comply with Privacy Act requirements, a Social Security number will not be required by the NICS to perform any background check) and miscellaneous identifying numbers (e.g., military number or number assigned by Federal, state, or local authorities to an individual's record). Additional identifiers that may be requested by the system after an initial query include height, weight, eye and hair color, and place of birth. At the option of the querying agency, these additional identifiers may also be included in the initial query of the system.

§ 25.8 System safeguards.

(a) Information maintained in the NICS Index is stored electronically for use in an FBI computer environment. The NICS central computer will reside inside a locked room within a secure facility. Access to the facility will be restricted to authorized personnel who have identified themselves and their need for access to a system security officer.

(b) Access to data stored in the NICS is restricted to duly authorized agencies. The security measures listed in paragraphs (c) through (f) of this section are the minimum to be adopted by all POCs and data sources having access to the NICS.

(c) State or local law enforcement agency computer centers designated by a Control Terminal Agency as POCs shall be authorized NCIC users and shall observe all procedures set forth in the NCIC Security Policy of 1992 when processing NICS background checks. The responsibilities of the Control Terminal Agencies and the computer centers include the following:

(1) The criminal justice agency computer site must have adequate physical security to protect against any unauthorized personnel gaining access to the computer equipment or to any of the stored data.

(2) Since personnel at these computer centers can have access to data stored in the NICS, they must be screened thoroughly under the authority and supervision of a state Control Terminal Agency. This authority and supervision may be delegated to responsible criminal justice agency personnel in the case of a satellite computer center being serviced through a state Control Terminal Agency. This screening will also apply to non-criminal justice maintenance or technical personnel.

(3) All visitors to these computer centers must be accompanied by staff personnel at all times.

(4) POCs utilizing a state/NCIC terminal to access the NICS must have the proper computer instructions written and other built-in controls to prevent data from being accessible to any terminals other than authorized terminals.

(5) Each state Control Terminal Agency shall build its data system around a central computer, through which each inquiry must pass for screening and verification.

(d) Authorized state agency remote terminal devices operated by POCs and having access to the NICS must meet the following requirements:

(1) POCs and data sources having terminals with access to the NICS must physically place these terminals in secure locations within the authorized agency;

(2) The agencies having terminals with access to the NICS must screen terminal operators and must restrict access to the terminals to a minimum number of authorized employees; and

(3) Copies of NICS data obtained from terminal devices must be afforded appropriate security to prevent any unauthorized access or use.

(e) FFL remote terminal devices may be used to transmit queries to the NICS via electronic dial-up access. The following procedures will apply to such queries:

(1) The NICS will incorporate a security authentication mechanism that performs FFL dial-up user authentication before network access takes place;

(2) The proper use of dial-up circuits by FFLs will be included as part of the periodic audits by the FBI; and

(3) All failed authentications will be logged by the NICS and provided to the NICS security administrator.

(f) FFLs may use the telephone to transmit queries to the NICS, in accordance with the following procedures:

(1) FFLs may contact the NICS Operations Center during its regular business hours by a telephone number provided by the FBI;

(2) FFLs will provide the NICS Representative with their FFL Number and code word, the type of sale, and the name, sex, race, date of birth, and state of residence of the prospective buyer; and

(3) The NICS will verify the FFL Number and code word before processing the request.

(g) The following precautions will be taken to help ensure the security and privacy of NICS information when FFLs contact the NICS Operations Center:

(1) Access will be restricted to the initiation of a NICS background check in connection with the proposed transfer of a firearm.

(2) The NICS Representative will only provide a response of ''Proceed'' or ''Delayed'' (with regard to the prospective firearms transfer), and will not provide the details of any record information about the transferee. In cases where potentially disqualifying information is found in response to an FFL query, the NICS Representative will provide a ''Delayed'' response to the FFL. Follow-up ''Proceed'' or ''Denied'' responses will be provided by the NICS Operations Center during its regular business hours.

(3) The FBI will periodically monitor telephone inquiries to ensure proper use of the system.

(h) All transactions and messages sent and received through electronic access by POCs and FFLs will be automatically logged in the NICS Audit Log described in § 25.9(b). Information in the NICS Audit Log will include initiation and termination messages, failed authentications, and matching records located by each search transaction.

(i) The FBI will monitor and enforce compliance by NICS users with the applicable system security requirements outlined in the NICS POC Guidelines and the NICS FFL Manual (available from the NICS Operations Center, Federal Bureau of Investigation, 1000 Custer Hollow Road, Clarksburg, West Virginia 26306–0147).

§ 25.9 Retention and destruction of records in the system.

(a) The NICS will retain NICS Index records that indicate that receipt of a firearm by the individuals to whom the records pertain would violate Federal or state law. The NICS will retain such records indefinitely, unless they are canceled by the originating agency. In cases where a firearms disability is not permanent, e.g., a disqualifying restraining order, the NICS will automatically purge the pertinent record when it is no longer disqualifying. Unless otherwise removed, records contained in the NCIC and III files that are accessed during a background check will remain in those files in accordance with established policy.

(b) The FBI will maintain an automated NICS Audit Log of all incoming and outgoing transactions that pass through the system.

(1) *Contents.* The NICS Audit Log will record the following information: Type of transaction (inquiry or response),

line number, time, date of inquiry, header, message key, ORI or FFL identifier, and inquiry/response data (including the name and other identifying information about the prospective transferee and the NTN).

(i) NICS Audit Log records relating to denied transactions will be retained for 10 years, after which time they will be transferred to a Federal Records Center for storage;

(ii) NICS Audit Log records relating to transactions in an open status, except the NTN and date, will be destroyed after not more than 90 days from the date of inquiry; and

(iii) In cases of NICS Audit Log records relating to allowed transactions, all identifying information submitted by or on behalf of the transferee will be destroyed within 24 hours after the FFL receives communication of the determination that the transfer may proceed. All other information, except the NTN and date, will be destroyed after not more than 90 days from the date of inquiry.

(2) *Use of information in the NICS Audit Log*. The NICS Audit Log will be used to analyze system performance, assist users in resolving operational problems, support the appeals process, or support audits of the use and performance of the system. Searches may be conducted on the Audit Log by time frame, *i.e.*, by day or month, or by a particular state or agency. Information in the NICS Audit Log pertaining to allowed transactions may be accessed directly only by the FBI and only for the purpose of conducting audits of the use and performance of the NICS, except that:

(i) Information in the NICS Audit Log, including information not yet destroyed under § 5.9(b)(1)(iii), that indicates, either on its face or in conjunction with other information, a violation or potential violation of law or regulation, may be shared with appropriate authorities responsible for investigating, prosecuting, and/or enforcing such law or regulation; and

(ii) The NTNs and dates for allowed transactions may be shared with ATF in Individual FFL Audit Logs as specified in § 25.9(b)(4).

(3) *Limitation on use*. The NICS, including the NICS Audit Log, may not be used by any Department, agency, officer, or employee of the United States to establish any system for the registration of firearms, firearm owners, or firearm transactions or dispositions, except with respect to persons prohibited from receiving a firearm by 18 U.S.C. 922(g) or (n) or by state law. The NICS Audit Log will be monitored and reviewed on a regular basis to detect any possible misuse of NICS data.

(4) *Creation and Use of Individual FFL Audit Logs*. Upon written request from ATF containing the name and license number of the FFL and the proposed date of inspection of the named FFL by ATF, the FBI may extract information from the NICS Audit Log and create an Individual FFL Audit Log for transactions originating at the named FFL for a limited period of time. An Individual FFL Audit Log shall contain all information on denied transactions, and, with respect to all other transactions, only non-identifying information from the transaction. In no instance shall an Individual FFL Audit Log contain more than 60 days worth of allowed or open transaction records originating at the FFL. The FBI will provide POC states the means to provide to the FBI information that will allow the FBI to generate Individual FFL Audit Logs in connection with ATF inspections of FFLs in POC states. POC states that elect not to have the FBI generate Individual FFL Audit Logs for FFLs in their states must develop a means by which the POC will provide such Logs to ATF.

(c) The following records in the FBI-operated terminals of the NICS will be subject to the Brady Act's requirements for destruction:

(1) All inquiry and response messages (regardless of media) relating to a background check that results in an allowed transfer; and

(2) All information (regardless of media) contained in the NICS Audit Log relating to a background check that results in an allowed transfer.

(d) The following records of state and local law enforcement units serving as POCs will be subject to the Brady Act's requirements for destruction:

(1) All inquiry and response messages (regardless of media) relating to the initiation and result of a check of the

NICS that allows a transfer that are not part of a record system created and maintained pursuant to independent state law regarding firearms transactions; and

(2) All other records relating to the person or the transfer created as a result of a NICS check that are not part of a record system created and maintained pursuant to independent state law regarding firearms transactions.

[Order No. 2186–98, 63 FR 58307, Oct. 30, 1998, as amended by Order No. 2354–2001, 66 FR 6474, Jan. 22, 2001; Order No. 2727–2004, 69 FR 43900, July 23, 2004]

§ 25.10 Correction of erroneous system information.

(a) An individual may request the reason for the denial from the agency that conducted the check of the NICS (the ''denying agency,'' which will be either the FBI or the state or local law enforcement agency serving as a POC). The FFL will provide to the denied individual the name and address of the denying agency and the unique transaction number (NTN or STN) associated with the NICS background check. The request for the reason for the denial must be made in writing to the denying agency. (POCs at their discretion may waive the requirement for a written request.)

(b) The denying agency will respond to the individual with the reasons for the denial within five business days of its receipt of the individual's request. The response should indicate whether additional information or documents are required to support an appeal, such as fingerprints in appeals involving questions of identity (i.e., a claim that the record in question does not pertain to the individual who was denied).

(c) If the individual wishes to challenge the accuracy of the record upon which the denial is based, or if the individual wishes to assert that his or her rights to possess a firearm have been restored, he or she may make application first to the denying agency, i.e., either the FBI or the POC. If the denying agency is unable to resolve the appeal, the denying agency will so notify the individual and shall provide the name and address of the agency that originated the document containing the information upon which the denial was based. The individual may then apply for correction of the record directly to the agency from which it originated. If the record is corrected as a result of the appeal to the originating agency, the individual may so notify the denying agency, which will, in turn, verify the record correction with the originating agency (assuming the originating agency has not already notified the denying agency of the correction) and take all necessary steps to correct the record in the NICS.

(d) As an alternative to the above procedure where a POC was the denying agency, the individual may elect to direct his or her challenge to the accuracy of the record, in writing, to the FBI, NICS Operations Center, Criminal Justice Information Services Division, 1000 Custer Hollow Road, Module C–3, Clarksburg, West Virginia 26306–0147. Upon receipt of the information, the FBI will investigate the matter by contacting the POC that denied the transaction or the data source. The FBI will request the POC or the data source to verify that the record in question pertains to the individual who was denied, or to verify or correct the challenged record. The FBI will consider the information it receives from the individual and the response it receives from the POC or the data source. If the record is corrected as a result of the challenge, the FBI shall so notify the individual, correct the erroneous information in the NICS, and give notice of the error to any Federal department or agency or any state that was the source of such erroneous records.

(e) Upon receipt of notice of the correction of a contested record from the originating agency, the FBI or the agency that contributed the record shall correct the data in the NICS and the denying agency shall provide a written confirmation of the correction of the erroneous data to the individual for presentation to the FFL. If the appeal of a contested record is successful and thirty (30) days or less have transpired since the initial check, and there are no other disqualifying records upon which the denial was based, the NICS will communicate a ''Proceed'' response to the FFL. If the appeal is successful and more than thirty (30) days have transpired since

the initial check, the FFL must recheck the NICS before allowing the sale to continue. In cases where multiple disqualifying records are the basis for the denial, the individual must pursue a correction for each record.

(f) An individual may also contest the accuracy or validity of a disqualifying record by bringing an action against the state or political subdivision responsible for providing the contested information, or responsible for denying the transfer, or against the United States, as the case may be, for an order directing that the contested information be corrected or that the firearm transfer be approved.

(g) An individual may provide written consent to the FBI to maintain information about himself or herself in a Voluntary Appeal File to be established by the FBI and checked by the NICS for the purpose of preventing the future erroneous denial or extended delay by the NICS of a firearm transfer. Such file shall be used only by the NICS for this purpose. The FBI shall remove all information in the Voluntary Appeal File pertaining to an individual upon receipt of a written request by that individual. However, the FBI may retain such information contained in the Voluntary Appeal File as long as needed to pursue cases of identified misuse of the system. If the FBI finds a disqualifying record on the individual after his or her entry into the Voluntary Appeal File, the FBI may remove the individual's information from the file.

[Order No. 2186–98, 63 FR 58307, Oct. 30, 1998, as amended by Order No. 2727–2004, 69 FR 43901, July 23, 2004]

§ 25.11 Prohibited activities and penalties.

(a) State or local agencies, FFLs, or individuals violating this subpart A shall be subject to a fine not to exceed $10,000 and subject to cancellation of NICS inquiry privileges.

(b) Misuse or unauthorized access includes, but is not limited to, the following:

(1) State or local agencies', FFLs', or individuals' purposefully furnishing incorrect information to the system to obtain a ''Proceed'' response, thereby allowing a firearm transfer;

(2) State or local agencies', FFLs', or individuals' purposefully using the system to perform a check for unauthorized purposes; and

(3) Any unauthorized person's accessing the NICS.

PART 26—IMPLEMENTATION OF DEATH SENTENCES IN FEDERAL CASES

Sec.

26.1 Applicability.
26.2 Proposed Judgment and Order.
26.3 Date, time, place, and method of execution.
26.4 Other execution procedures.
26.5 Attendance at or participation in executions by Department of Justice personnel.

AUTHORITY: 5 U.S.C. 301; 18 U.S.C. 4001(b), 4002; 28 U.S.C. 509, 510.

SOURCE: Order No. 1655–93, 57 FR 4901, Jan. 19, 1993, unless otherwise noted.

§ 26.1 Applicability.

The regulations of this part apply whenever a sentencing hearing conducted in a United States District Court has resulted in a recommendation or determination that a criminal defendant be sentenced to death for commission of an offense described in any federal statute.

§ 26.2 Proposed Judgment and Order.

(a) Whenever this part becomes applicable, the attorney for the government shall promptly file with the sentencing court a proposed Judgment and Order. The proposed Judgment and Order shall state, in addition to any other matters required by law or otherwise appropriate, that:

(1) The sentence shall be executed by a United States Marshal designated by the Director of the United States Marshals Service;

(2) The sentence shall be executed by intravenous injection of a lethal substance or substances in a quantity sufficient to cause death;

(3) The sentence shall be executed on a date and at a place designated by the Director of the Federal Bureau of Prisons; and

(4) The prisoner under sentence of death shall be committed to the custody of the Attorney General or his authorized representative for appropriate detention pending execution of the sentence.

(b) The attorney for the government shall append to the proposed Judgment and Order a Return by which the designated United States Marshal may inform the court that the sentence of death has been executed.

§ 26.3 Date, time, place, and method of execution.

(a) Except to the extent a court orders otherwise, a sentence of death shall be executed:

(1) On a date and at a time designated by the Director of the Federal Bureau of Prisons, which date shall be no sooner than 60 days from the entry of the judgment of death. If the date designated for execution passes by reason of a stay of execution, then a new date shall be designated promptly by the Director of the Federal Bureau of Prisons when the stay is lifted;

(2) At a federal penal or correctional institution designated by the Director of the Federal Bureau of Prisons;

(3) By a United States Marshal designated by the Director of the United States Marshals Service, assisted by additional personnel selected by the Marshal and the Warden of the designated institution and acting at the direction of the Marshal; and

(4) By intravenous injection of a lethal substance or substances in a quantity sufficient to cause death, such substance or substances to be determined by the Director of the Federal Bureau of Prisons and to be administered by qualified personnel selected by the Warden and acting at the direction of the Marshal.

(b) Unless the President interposes, the United States Marshal shall not stay execution of the sentence on the basis that the prisoner has filed a petition for executive clemency.

§ 26.4 Other execution procedures.

Except to the extent a court orders otherwise:

(a) The Warden of the designated institution shall notify the prisoner under sentence of death of the date designated for execution at least 20 days in advance, except when the date follows a postponement of fewer than 20 days of a previously scheduled and noticed date of execution, in which case the Warden shall notify the prisoner as soon as possible.

(b) Beginning seven days before the designated date of execution, the prisoner shall have access only to his spiritual advisers (not to exceed two), his defense attorneys, members of his family, and the officers and employees of the institution. Upon approval of the Director of the Federal Bureau of Prisons, the Warden may grant access to such other proper persons as the prisoner may request.

(c) In addition to the Marshal and Warden, the following persons shall be present at the execution:

(1) Necessary personnel selected by the Marshal and Warden;

(2) Those attorneys of the Department of Justice whom the Deputy Attorney General determines are necessary;

(3) Not more than the following numbers of person selected by the prisoner:

(i) One spiritual adviser;

(ii) Two defense attorneys; and

(iii) Three adult friends or relatives; and

(4) Not more than the following numbers of persons selected by the Warden:

(i) Eight citizens; and

(ii) Ten representatives of the press.

(d) No other person shall be present at the execution, unless leave for such person's presence is granted by the Director of the Federal Bureau of Prisons. No person younger than 18 years of age shall witness the execution.

(e) The Warden should notify those individuals described in paragraph (c) of this section as soon as practicable before the designated time of execution.

(f) No photographic or other visual or audio recording of the execution shall be permitted.

(g) After the execution has been carried out, qualified personnel selected by the Warden shall conduct an examination of the body of the prisoner to determine that death has occurred and shall inform the Marshal and Warden of his determination. Upon notification of prisoner's death, the Marshal shall

complete and sign the Return described in § 26.2(b) or any similar document and shall file such document with the sentencing court.

(h) The remains of the prisoner shall be disposed of according to procedures established by the Director of the Federal Bureau of Prisons.

§ 26.5 Attendance at or participation in executions by Department of Justice personnel.

No officer or employee of the Department of Justice shall be required to be in attendance at or to participate in any execution if such attendance or participation is contrary to the moral or religious convictions of the officer or employee, or if the employee is a medical professional who considers such participation or attendance contrary to medical ethics. For purposes of this section, the term ''participation'' includes personal preparation of the condemned individual and the apparatus used for execution and supervision of the activities of other personnel in carrying out such activities.

PART 27—WHISTLEBLOWER PROTECTION FOR FEDERAL BUREAU OF INVESTIGATION EMPLOYEES

Subpart A—Protected Disclosures of Information

Sec.
27.1 Making a protected disclosure.
27.2 Prohibition against reprisal for making a protected disclosure.

Subpart B—Investigating Reprisal Allegations and Ordering Corrective Action

27.3 Investigations: The Department of Justice's Office of Professional Responsibility and Office of the Inspector General.
27.4 Corrective action and other relief; Director, Office of Attorney Recruitment and Management.
27.5 Review.
27.6 Extensions of time.

AUTHORITY: 5 U.S.C. 301, 3151; 28 U.S.C. 509, 510, 515–519; 5 U.S.C. 2303; President's Memorandum to the Attorney General, Delegation of Responsibilities Concerning FBI Employees Under the Civil Service Reform Act of 1978, 3 CFR p. 284 (1997).

SOURCE: Order No. 2264–99, 64 FR 58786, Nov. 1, 1999, unless otherwise noted.

Subpart A—Protected Disclosures of Information

§ 27.1 Making a protected disclosure.

(a) When an employee of, or applicant for employment with, the Federal Bureau of Investigation (FBI) (FBI employee) makes a disclosure of information to the Department of Justice's (Department's) Office of Professional Responsibility (OPR), the Department's Office of Inspector General (OIG), the FBI Office of Professional Responsibility (FBI OPR) (collectively, Receiving Offices), the Attorney General, the Deputy Attorney General, the Director of the FBI, the Deputy Director of the FBI, or to the highest ranking official in any FBI field office, the disclosure will be a ''protected disclosure'' if the person making it reasonably believes that it evidences:

(1) A violation of any law, rule or regulation; or

(2) Mismanagement, a gross waste of funds, an abuse of authority, or a substantial and specific danger to public health or safety.

(b) Any office or official (other than the OIG or OPR) receiving a protected disclosure shall promptly report such disclosure to the OIG or OPR for investigation. The OIG and OPR shall proceed in accordance with procedures establishing their respective jurisdiction. The OIG or OPR may refer such allegations to FBI-OPR for investigation unless the Deputy Attorney General determines that such referral shall not be made.

[Order No. 2264–99, 64 FR 58786, Nov. 1, 1999, as amended by Order No. 2492–2001, 66 FR 37904, July 20, 2001]

§ 27.2 Prohibition against reprisal for making a protected disclosure.

(a) Any employee of the FBI, or of any other component of the Department, who has authority to take, direct others to take, recommend, or approve any personnel action shall not, with respect to such authority, take or fail to take, or threaten to take or fail to take, a personnel action, as defined below, with respect to any FBI employee as a reprisal for a protected disclosure.

(b) Personnel action means any action described in clauses (i) through

(xi) of 5 U.S.C. 2302(a)(2)(A) taken with respect to an FBI employee other than one in a position which the Attorney General has designated in advance of encumbrance as being a position of a confidential, policy-determining, policy-making, or policy-advocating character.

Subpart B—Investigating Reprisal Allegations and Ordering Corrective Action

§ 27.3 Investigations: The Department of Justice's Office of Professional Responsibility and Office of the Inspector General.

(a)(1) An FBI employee who believes that another employee of the FBI, or of any other Departmental component, has taken or has failed to take a personnel action as a reprisal for a protected disclosure (reprisal), may report the alleged reprisal to either the Department's OPR or the Department's OIG (collectively, Investigative Offices). The report of an alleged reprisal must be made in writing.

(2) For purposes of this subpart, references to the FBI include any other Departmental component in which the person or persons accused of the reprisal were employed at the time of the alleged reprisal.

(b) The Investigative Office that receives the report of an alleged reprisal shall consult with the other Investigative Office to determine which office is more suited, under the circumstances, to conduct an investigation into the allegation. The Attorney General retains final authority to designate or redesignate the Investigative Office that will conduct an investigation.

(c) Within 15 calendar days of the date the allegation of reprisal is first received by an Investigative Office, the office that will conduct the investigation (Conducting Office) shall provide written notice to the person who made the allegation (Complainant) indicating—

(1) That the allegation has been received; and

(2) The name of a person within the Conducting Office who will serve as a contact with the Complainant.

(d) The Conducting Office shall investigate any allegation of reprisal to the extent necessary to determine whether there are reasonable grounds to believe that a reprisal has been or will be taken.

(e) Within 90 calendar days of providing the notice required in paragraph (c) of this section, and at least every 60 calendar days thereafter (or at any other time if the Conducting Office deems appropriate), the Conducting Office shall notify the Complainant of the status of the investigation.

(f) The Conducting Office shall determine whether there are reasonable grounds to believe that there has been or will be a reprisal for a protected disclosure. The Conducting Office shall make this determination within 240 calendar days of receiving the allegation of reprisal unless the Complainant agrees to an extension.

(g) If the Conducting Office decides to terminate an investigation, it shall provide, no later than 10 business days before providing the written statement required by paragraph (h) of this section, a written status report to the Complainant containing the factual findings and conclusions justifying the termination of the investigation. The Complainant may submit written comments on such report to the Conducting Office. The Conducting Office shall not be required to provide a subsequent written status report after submission of such comments.

(h) If the Conducting Office terminates an investigation, it shall prepare and transmit to the Complainant a written statement notifying him/her of—

(1) The termination of the investigation;

(2) A summary of relevant facts ascertained by the Conducting Office;

(3) The reasons for termination of the investigation; and

(4) A response to any comments submitted under paragraph (g) of this section.

(i) Such written statement prepared pursuant to paragraph (h) of this section may not be admissible as evidence in any subsequent proceeding without the consent of the Complainant.

(j) Nothing in this part shall prohibit the Receiving Offices, in the absence of

a reprisal allegation by an FBI employee under this part, from conducting an investigation, under their pre-existing jurisdiction, to determine whether a reprisal has been or will be taken.

§ 27.4 Corrective action and other relief; Director, Office of Attorney Recruitment and Management.

(a) If, in connection with any investigation, the Conducting Office determines that there are reasonable grounds to believe that a reprisal has been or will be taken, the Conducting Office shall report this conclusion, together with any findings and recommendations for corrective action, to the Director, Office of Attorney Recruitment and Management (the Director). If the Conducting Office's report to the Director includes a recommendation for corrective action, the Director shall provide an opportunity for comments on the report by the FBI and the Complainant. The Director, upon receipt of the Conducting Office's report, shall proceed in accordance with paragraph (e) of this section. A determination by the Conducting Office that there are reasonable grounds to believe a reprisal has been or will be taken shall not be cited or referred to in any proceeding under these regulations, without the Complainant's consent.

(b) At any time, the Conducting Office may request the Director to order a stay of any personnel action for 45 calendar days if it determines that there are reasonable grounds to believe that a reprisal has been or is to be taken. The Director shall order such stay within three business days of receiving the request for stay, unless the Director determines that, under the facts and circumstances involved, such a stay would not be appropriate. The Director may extend the period of any stay granted under this paragraph for any period that the Director considers appropriate. The Director shall allow the FBI an opportunity to comment to the Director on any proposed extension of a stay, and may request additional information as the Director deems necessary. The Director may terminate a stay at any time, except that no such termination shall occur until the Complainant and the Conducting Office shall first have had notice and an opportunity to comment.

(c)(1) The Complainant may present a request for corrective action directly to the Director within 60 calendar days of receipt of notification of termination of an investigation by the Conducting Office or at any time after 120 calendar days from the date the Complainant first notified an Investigative Office of an alleged reprisal if the Complainant has not been notified by the Conducting Office that it will seek corrective action. The Director shall notify the FBI of the receipt of the request and allow the FBI 25 calendar days to respond in writing. If the Complainant presents a request for corrective action to the Director under this paragraph, the Conducting Office may continue to seek corrective action specific to the Complainant, including the submission of a report to the Director, only with the Complainant's consent. Notwithstanding the Complainant's refusal of such consent, the Conducting Office may continue to investigate any violation of law, rule, or regulation.

(2) The Director may not direct the Conducting Office to reinstate an investigation that the Conducting Office has terminated in accordance with § 27.3(h).

(d) Where a Complainant has presented a request for corrective action to the Director under paragraph (c) of this section, the Complainant may at any time request the Director to order a stay of any personnel action allegedly taken or to be taken in reprisal for a protected disclosure. The request for a stay must be in writing, and the FBI shall have an opportunity to respond. The request shall be granted within 10 business days of the receipt of any response by the FBI if the Director determines that such a stay would be appropriate. A stay granted under this paragraph shall remain in effect for such period as the Director deems appropriate. The Director may modify or dissolve a stay under this paragraph at any time if the Director determines that such a modification or dissolution is appropriate.

(e)(1) The Director shall determine, based upon all the evidence, whether a protected disclosure was a contributing

factor in a personnel action taken or to be taken. Subject to paragraph (e)(2) of this section, if the Director determines that a protected disclosure was a contributing factor in a personnel action taken or to be taken, the Director shall order corrective action as the Director deems appropriate. The Director may conclude that the disclosure was a contributing factor in the personnel action based upon circumstantial evidence, such as evidence that the employee taking the personnel action knew of the disclosure or that the personnel action occurred within a period of time such that a reasonable person could conclude that the disclosure was a contributing factor in the personnel action.

(2) Corrective action may not be ordered if the FBI demonstrates by clear and convincing evidence that it would have taken the same personnel action in the absence of such disclosure.

(3) In making the determinations required under this subsection, the Director may hold a hearing at which the Complainant may present evidence in support of his or her claim, in accordance with such procedures as the Director may adopt. The Director is hereby authorized to compel the attendance and testimony of, or the production of documentary or other evidence from, any person employed by the Department if doing so appears reasonably calculated to lead to the discovery of admissible evidence, is not otherwise prohibited by law or regulation, and is not unduly burdensome. Any privilege available in judicial and administrative proceedings relating to the disclosure of documents or the giving of testimony shall be available before the Director. All assertions of such privileges shall be decided by the Director. The Director may, upon request, certify a ruling on an assertion of privilege for review by the Deputy Attorney General.

(f) If the Director orders corrective action, such corrective action may include: placing the Complainant, as nearly as possible, in the position he would have been in had the reprisal not taken place; reimbursement for attorneys fees, reasonable costs, medical costs incurred, and travel expenses; back pay and related benefits; and any other reasonable and foreseeable consequential damages.

(g) If the Director determines that there has not been a reprisal, the Director shall report this finding in writing to the complainant, the FBI, and the Conducting Office.

[Order No. 2264–99, 64 FR 58786, Nov. 1, 1999, as amended by Order No. 2492–2001, 66 FR 37904, July 20, 2001]

§ 27.5 Review.

The Complainant or the FBI may request, within 30 calendar days of a final determination or corrective action order by the Director, review by the Deputy Attorney General of that determination or order. The Deputy Attorney General shall set aside or modify the Director's actions, findings, or conclusions found to be arbitrary, capricious, an abuse of discretion, or otherwise not in accordance with law; obtained without procedures required by law, rule, or regulation having been followed; or unsupported by substantial evidence. The Deputy Attorney General has full discretion to review and modify corrective action ordered by the Director, provided, however that if the Deputy Attorney General upholds a finding that there has been a reprisal, then the Deputy Attorney general shall order appropriate corrective action.

§ 27.6 Extensions of time.

The Director may extend, for extenuating circumstances, any of the time limits provided in these regulations relating to proceedings before him and to requests for review by the Deputy Attorney General.

PART 28—DNA IDENTIFICATION SYSTEM

Subpart A—Qualifying Federal Offenses for Purposes of DNA Sample Collection

Sec.
28.1 Purpose.
28.2 Determination of offenses.

Subpart B—DNA Sample Collection, Analysis, and Indexing

28.11 Definitions.
28.12 Collection of DNA samples.
28.13 Analysis and indexing of DNA samples.

Subpart C—Preservation of Biological Evidence

28.21 Purpose.
28.22 The requirement to preserve biological evidence.
28.23 Evidence subject to the preservation requirement.
28.24 Exceptions based on the results of judicial proceedings.
28.25 Exceptions based on a defendant's conduct.
28.26 Exceptions based on the nature of the evidence.
28.27 Non-preemption of other requirements.
28.28 Sanctions for violations.

AUTHORITY: 28 U.S.C. 509, 510; 42 U.S.C. 14132, 14135a, 14135b; 10 U.S.C. 1565; 18 U.S.C. 3600A; Pub. L. 106–546, 114 Stat. 2726; Pub. L. 107–56, 115 Stat. 272; Pub. L. 108–405, 118 Stat. 2260.

SOURCE: Order No. 2699–2003, 68 FR 74858, Dec. 29, 2003, unless otherwise noted.

Subpart A—Qualifying Federal Offenses for Purposes of DNA Sample Collection

§ 28.1 Purpose.

Section 3 of Pub. L. 106–546 directs the collection, analysis, and indexing of a DNA sample from each individual in the custody of the Bureau of Prisons or under the supervision of a probation office who is, or has been, convicted of a qualifying Federal offense. Subsection (d) of that section states that the offenses that shall be treated as qualifying Federal offenses are any felony and certain other types of offenses, as determined by the Attorney General.

[Order No. 2753–2005, 70 FR 4767, Jan. 31, 2005]

§ 28.2 Determination of offenses.

(a) *Felony* means a Federal offense that would be classified as a felony under 18 U.S.C. 3559(a) or that is specifically classified by a letter grade as a felony.

(b) The following offenses shall be treated for purposes of section 3 of Pub. L. 106–546 as qualifying Federal offenses:

(1) Any felony.

(2) Any offense under chapter 109A of title 18, United States Code, even if not a felony.

(3) Any offense under any of the following sections of the United States Code, even if not a felony:

(i) In title 18, section 111, 112(b) involving intimidation or threat, 113, 115, 245, 247, 248 unless the offense involves only a nonviolent physical obstruction and is not a felony, 351, 594, 1153 involving assault against an individual who has not attained the age of 16 years, 1361, 1368, the second paragraph of 1501, 1509, 1751, 1991, or 2194 involving force or threat.

(ii) In title 16, section 773g if the offense involves a violation of section 773e(a)(3), 1859 if the offense involves a violation of section 1857(1)(E), 3637(c) if the offense involves a violation of section 3637(a)(3), or 5010(b) if the offense involves a violation of section 5009(6).

(iii) In title 26, section 7212.

(iv) In title 30, section 1463 if the offense involves a violation of section 1461(4).

(v) In title 40, section 5109 if the offense involves a violation or attempted violation of section 5104(e)(2)(F).

(vi) In title 42, section 2283, 3631, or 9152(d) if the offense involves a violation of section 9151(3).

(vii) In title 43, section 1063 involving force, threat, or intimidation.

(viii) In title 47, section 606(b).

(ix) In title 49, section 46506(1) unless the offense involves only an act that would violate section 661 or 662 of title 18 and would not be a felony if committed in the special maritime and territorial jurisdiction of the United States.

(4) Any offense that is an attempt or conspiracy to commit any of the foregoing offenses, even if not a felony.

(c) An offense that was or would have been a qualifying Federal offense as defined in this section at the time of conviction, such as an offense under 18 U.S.C. 2031 or 2032, remains a qualifying Federal offense even if the provision or provisions defining the offense or assigning its penalties have subsequently been repealed, superseded, or modified.

[Order No. 2753–2005, 70 FR 4767, Jan. 31, 2005]

Subpart B—DNA Sample Collection, Analysis, and Indexing

§28.11 Definitions.

DNA analysis means analysis of the deoxyribonucleic acid (DNA) identification information in a bodily sample.

DNA sample means a tissue, fluid, or other bodily sample of an individual on which a DNA analysis can be carried out.

§28.12 Collection of DNA samples.

(a) The Bureau of Prisons shall collect a DNA sample from each individual in the custody of the Bureau of Prisons who is, or has been, convicted of—

(1) A qualifying Federal offense as described in §28.2;

(2) A qualifying military offense, as determined under 10 U.S.C. 1565; or

(3) A qualifying District of Columbia offense, as determined under section 4(d) of Public Law 106–546.

(b) Notwithstanding paragraph (a) of this section, the Bureau of Prisons may, but need not, collect a DNA sample from an individual described in paragraph (a) of this section if the Combined DNA Index System contains a DNA analysis with respect to that individual, or if a DNA sample has been collected from that individual under 10 U.S.C. 1565.

(c) Each individual described in paragraph (a) of this section shall cooperate in the collection of a DNA sample from that individual by the Bureau of Prisons. The Bureau of Prisons may use or authorize the use of such means as are reasonably necessary to detain, restrain, and collect a DNA sample from an individual described in paragraph (a) of this section who refuses to cooperate in the collection of the sample.

(d) The Bureau of Prisons may enter into agreements with units of State or local government or with private entities to provide for the collection of samples under this section.

(e) The Bureau of Prisons shall furnish each DNA sample collected under this section to the Federal Bureau of Investigation.

§28.13 Analysis and indexing of DNA samples.

(a) The Federal Bureau of Investigation shall carry out a DNA analysis on each DNA sample furnished to the Federal Bureau of Investigation pursuant to section 3(b) or 4(b) of Public Law 106–54, and shall include the results in the Combined DNA Index System.

(b) The Federal Bureau of Investigation shall include in the Combined DNA Index System the results of each analysis furnished to the Federal Bureau of Investigation pursuant to 10 U.S.C. 1565(b)(2).

Subpart C—Preservation of Biological Evidence

SOURCE: Order No. 2762–2005, 70 FR 21957, Apr. 28, 2005, unless otherwise noted.

§28.21 Purpose.

Section 3600A of title 18 of the United States Code (''section 3600A'') requires the Government to preserve biological evidence that was secured in the investigation or prosecution of a Federal offense, if a defendant is under a sentence of imprisonment for such offense, subject to certain limitations and exceptions. The general purpose of this requirement is to preserve biological evidence for possible DNA testing under 18 U.S.C. 3600. Subsection (e) of section 3600A requires the Attorney General to promulgate regulations to implement and enforce section 3600A, including appropriate disciplinary sanctions to ensure that employees comply with such regulations.

§28.22 The requirement to preserve biological evidence.

(a) *Applicability in general.* The requirement of section 3600A to preserve biological evidence applies to evidence that has been retained in cases in which the offense or conviction occurred prior to the enactment of section 3600A or the adoption of this subpart, as well as to evidence secured in pending and future cases.

(b) *Limitation to circumstances in which a defendant is under a sentence of imprisonment for the offense.* The requirement of section 3600A to preserve

biological evidence secured in the investigation or prosecution of a Federal offense begins to apply when a defendant is convicted and sentenced to imprisonment for the offense, and ceases to apply when the defendant or defendants are released following such imprisonment. The evidence preservation requirement of section 3600A does not apply in the following situations:

(1) *Inapplicability at the investigative stage.* The requirement of section 3600A to preserve biological evidence does not apply at the investigative stage of criminal cases, occurring prior to the conviction and sentencing to imprisonment of a defendant. Biological evidence may be collected and preserved in the investigation of Federal offenses prior to the sentencing of a defendant to imprisonment, reflecting sound investigative practice and the need for evidence in trial proceedings that may result from the investigation, but section 3600A does not govern these activities.

(2) *Inapplicability to cases involving only non-incarcerative sentences.* The requirement of section 3600A to preserve biological evidence does not apply in cases in which defendants receive only nonincarcerative sentences, such as probation, fines, or payment of restitution.

(3) *Inapplicability following release.* The requirement of section 3600A to preserve biological evidence ceases to apply when the defendant or defendants are released following imprisonment, either unconditionally or under supervision. The requirement does not apply during any period following the release of the defendant or defendants from imprisonment, even if the defendant or defendants remain on supervised release or parole.

(4) *Inapplicability following revocation of release.* The requirement of section 3600A to preserve biological evidence applies during a defendant's imprisonment pursuant to the sentence imposed upon conviction of the offense, as opposed to later imprisonment resulting from a violation of release conditions. The requirement does not apply during any period in which the defendant or defendants are imprisoned based on the revocation of probation, supervised release, or parole.

(c) *Conditions of preservation.* The requirement of section 3600A to preserve biological evidence means that such evidence cannot be destroyed or disposed of under the circumstances in which section 3600A requires its preservation, but does not limit agency discretion concerning the conditions under which biological evidence is maintained or the transfer of biological evidence among different agencies.

§ 28.23 Evidence subject to the preservation requirement.

(a) *Biological evidence generally.* The evidence preservation requirement of section 3600A applies to ''biological evidence,'' which is defined in section 3600A(b). The covered evidence is sexual assault forensic examination kits under section 3600A(b)(1) and semen, blood, saliva, hair, skin tissue, or other identified biological material under section 3600A(b)(2).

(b) *Biological evidence under section 3600A(b)(2).* Biological evidence within the scope of section 3600A(b)(2) is identified biological material that may derive from a perpetrator of the offense, and hence might be capable of shedding light on the question of a defendant's guilt or innocence through DNA testing to determine whether the defendant is the source of the material. In greater detail, evidence within the scope of section 3600A(b)(2) encompasses the following:

(1) *Identified biological material.* Beyond sexual assault forensic examination kits, which are specially referenced in section 3600A(b)(1), section 3600A requires preservation only of evidence that is detected and identified as semen, blood, saliva, hair, skin tissue, or some other type of biological material. Section 3600A's preservation requirement does not apply to an item of evidence merely because it is known on theoretical grounds that physical things that have been in proximity to human beings almost invariably contain unidentified and imperceptible amounts of their organic matter.

(2) *Material that may derive from a perpetrator of the crime.* Biological evidence within the scope of section 3600A(b)(2) must constitute ''biological material.'' In the context of section 3600A, this term does not encompass all

possible types of organic matter, but rather refers to organic matter that may derive from the body of a perpetrator of the crime, and hence might be capable of shedding light on a defendant's guilt or innocence by including or excluding the defendant as the source of its DNA.

Example 1. In a murder case in which the victim struggled with the killer, scrapings of skin tissue or blood taken from under the victim's fingernails would constitute biological material in the sense of section 3600A(b)(2), and would be subject to section 3600A's requirement to preserve biological evidence, assuming satisfaction of the statute's other conditions. Such material, which apparently derives from the perpetrator of the crime, could potentially shed light on guilt or innocence through DNA testing under 18 U.S.C. 3600 to determine whether a defendant was the source of this material.

Example 2. Biological material in the sense of section 3600A(b)(2) would not include the body of a murder victim who was shot from a distance, the carcasses of cattle in a meat truck secured in an investigation of the truck's hijacking, a quantity of marijuana seized in a drug trafficking investigation, or articles made from wood or from wool or cotton fiber. While such items of evidence constitute organic matter in a broader sense, they are not biological material within the scope of section 3600A(b)(2), because they do not derive from the body of a perpetrator of the crime, and hence could not shed light on a defendant's guilt or innocence through DNA testing under 18 U.S.C. 3600 to determine whether the defendant is the source of the evidence.

§ 28.24 Exceptions based on the results of judicial proceedings.

Subsection (c) of section 3600A makes the biological evidence preservation requirement inapplicable in two circumstances relating to the results of judicial proceedings:

(a) *Judicial denial of DNA testing.* Section 3600A(c)(1) exempts situations in which a court has denied a motion for DNA testing under 18 U.S.C. 3600 and no appeal is pending.

(b) *Inclusion of defendant as source.* Section 3600A(c)(5) exempts situations in which there has been DNA testing under 18 U.S.C. 3600 and the results included the defendant as the source of the evidence.

§ 28.25 Exceptions based on a defendant's conduct.

Subsection (c) of section 3600A makes the biological evidence preservation requirement inapplicable in two circumstances relating to action (or inaction) by the defendant:

(a) *Waiver by defendant.* Section 3600A(c)(2) makes the biological evidence preservation requirement inapplicable if the defendant knowingly and voluntarily waived DNA testing in a court proceeding conducted after the date of enactment, *i.e.*, after October 30, 2004. Hence, for example, if a defendant waives DNA testing in the context of a plea agreement, in a pretrial colloquy with the court, in the course of discovery in pretrial proceedings, or in a postconviction proceeding, and the proceeding in which the waiver occurs takes place after October 30, 2004, the biological evidence preservation requirement of section 3600A does not apply.

(b) *Notice to defendant.* (1) Section 3600A(c)(3) makes the biological evidence preservation requirement inapplicable if the defendant is notified that the biological evidence may be destroyed "after a conviction becomes final and the defendant has exhausted all opportunities for direct review of the conviction," and "the defendant does not file a motion under section 3600 within 180 days of receipt of the notice."

(2) Effective notice concerning the possible destruction of biological evidence for purposes of section 3600A(c)(3) cannot be given if the case is pending on direct review of the conviction before a court of appeals or the Supreme Court, if time remains for the defendant to file a notice of appeal from the judgment of conviction in the court of appeals, or if time remains for the defendant to file a petition for certiorari to the Supreme Court following the court of appeals' determination of an appeal of the conviction.

(3) Once direct review has been completed, or the time for seeking direct review has expired, section 3600A(c)(3) allows notice to the defendant that biological evidence may be destroyed. The biological evidence preservation requirement of section 3600A thereafter does not apply, unless the defendant

files a motion under 18 U.S.C. 3600 within 180 days of receipt of the notice. Notice to a defendant that biological evidence may be destroyed may be provided by certified mail, and the Federal Bureau of Prisons shall create a record concerning the delivery of such mail to an inmate. To determine whether a defendant has filed a motion under 18 U.S.C. 3600 within 180 days of receipt of such a notice, the agency providing the notice may obtain confirmation of delivery and the date of delivery by inquiry with the Federal Bureau of Prisons, and may ascertain whether the defendant has filed a motion under 18 U.S.C. 3600 within 180 days of that date by checking the records of the district court which entered the judgment of conviction of the defendant for the offense or asking the United States Attorney's office in that district.

§ 28.26 Exceptions based on the nature of the evidence.

Subsection (c)(4) of section 3600A provides that the section's biological evidence preservation requirement does not apply if ''the evidence must be returned to its rightful owner, or is of such a size, bulk, or physical character as to render retention impracticable.'' This exception is subject to the condition that the Government must ''take[] reasonable measures to remove and preserve portions of the material evidence sufficient to permit future DNA testing.''

(a) *Evidence not retained beyond the investigative stage.* Section 3600A(c)(4) has no application if items of the sort it describes—*e.g.*, items that must be returned to the rightful owner, or items that are so large that their retention is impracticable—are not kept until the time when a defendant is convicted and sentenced to imprisonment. Investigative agents may take samples from such items during the investigative stage of the case, in accordance with their judgment about what is needed for purposes of DNA testing or other evidentiary use, or may conclude that the nature of the items does not warrant taking such samples, and the items themselves may then be returned to the owners or otherwise disposed of prior to the trial, conviction, or sentencing of any defendant. In such cases, section 3600A is inapplicable, because its evidence preservation requirement does not apply at all until a defendant is sentenced to imprisonment, as noted in § 28.22(b)(1).

(b) *Evidence not constituting biological material.* It is rarely the case that a bulky item of the sort described in section 3600A(c)(4), or a large part of such an item, constitutes biological evidence as defined in section 3600A(b). If such an item is not biological evidence in the relevant sense, it is outside the scope of section 3600A. For example, the evidence secured in the investigation of a bank robbery may include a stolen car that was used in the getaway, and there may be some item in the car containing biological material that derives from a perpetrator of the crime, such as saliva on a discarded cigarette butt. Even if the vehicle is kept until a defendant is sentenced to imprisonment, section 3600A's preservation requirement would not apply to the vehicle as such, because the vehicle is not biological material. It would be sufficient for compliance with section 3600A to preserve the particular items in the vehicle that contain identified biological material or portions of them that contain the biological material.

(c) *Preservation of portions sufficient for DNA testing.* If evidence described in section 3600A(c)(4) is not otherwise exempt from the preservation requirement of section 3600A, and section 3600A(c)(4) is relied on in disposing of such evidence, reasonable measures must be taken to preserve portions of the evidence sufficient to permit future DNA testing. For example, considering a stolen car used in a bank robbery, it may be the case that one of the robbers was shot during the getaway and bled all over the interior of the car. In such a case, if the car is kept until a defendant is sentenced to imprisonment for the crime, there would be extensive biological material in the car that would potentially be subject to section 3600A's requirement to preserve biological evidence. Moreover, the biological material in question could not be fully preserved without retaining the whole car or removing and retaining large amounts of matter from the interior of the car. Section 3600A(c)(4) would be relevant in such a case, given

that fully retaining the biological evidence is likely to be impracticable or inconsistent with the rightful owner's entitlement to the return of the vehicle. In such a case, section 3600A(c)(4) could be relied on, and its requirements would be satisfied if samples of the blood were preserved sufficient to permit future DNA testing. Preserving such samples would dispense with any need under section 3600A to retain the vehicle itself or larger portions thereof.

§28.27 Non-preemption of other requirements.

Section 3600A's requirement to preserve biological evidence applies cumulatively with other evidence retention requirements. It does not preempt or supersede any statute, regulation, court order, or other provision of law that may require evidence, including biological evidence, to be preserved.

§28.28 Sanctions for violations.

(a) *Disciplinary sanctions.* Violations of section 3600A or of this subpart by Government employees shall be subject to the disciplinary sanctions authorized by the rules or policies of their employing agencies for violations of statutory or regulatory requirements.

(b) *Criminal sanctions.* Violations of section 3600A may also be subject to criminal sanctions as prescribed in subsection (f) of that section. Section 3600A(f) makes it a felony offense, punishable by up to five years of imprisonment, for anyone to knowingly and intentionally destroy, alter, or tamper with biological evidence that is required to be preserved under section 3600A with the intent to prevent that evidence from being subjected to DNA testing or prevent the production or use of that evidence in an official proceeding.

(c) *No effect on validity of convictions.* Section 3600A's requirements are enforceable through the disciplinary sanctions and criminal sanctions described in paragraphs (a) and (b) of this section. A failure to preserve biological evidence as required by section 3600A does not provide a basis for relief in any postconviction proceeding.

PART 29—MOTOR VEHICLE THEFT PREVENTION ACT REGULATIONS

Sec.

29.1 Purpose.
29.2 Definitions.
29.3 Administration by the Bureau of Justice Assistance.
29.4 Election to participate by states and localities.
29.5 Notification of law enforcement officials.
29.6 Limited participation by states and localities permitted.
29.7 Withdrawal from the program by states and localities.
29.8 Motor vehicle owner participation.
29.9 Motor vehicles for hire.
29.10 Owner withdrawal from the program.
29.11 Sale or other transfer of an enrolled vehicle.
29.12 Specified conditions under which stops may be authorized.
29.13 No new conditions without consent.

AUTHORITY: 28 U.S.C. 509, 510; 42 U.S.C. 14171.

SOURCE: 61 FR 40725, Aug. 6, 1996, unless otherwise noted.

§29.1 Purpose.

(a) The purpose of this part is to implement the Motor Vehicle Theft Prevention Act, 42 U.S.C. 14171, which requires the Attorney General to develop, in cooperation with the states, a national voluntary motor vehicle theft prevention program. The program will be implemented by states and localities, at their sole option.

(b) Under this program, individual motor vehicle owners voluntarily sign a consent form in which the owner

(1) Indicates that the identified vehicle is not normally operated under certain specified conditions and

(2) Agrees to display a program decal or license plate on the vehicle and to permit law enforcement officials in any jurisdiction to stop the motor vehicle if it is being operated under specified conditions and take reasonable steps to determine whether the vehicle is being operated by or with the permission of the owner.

(c) The regulations set forth in this part establish the conditions under which an owner may consent to having his or her vehicle stopped and the manner in which a State or locality may elect to participate.

§ 29.2 Definitions.

For the purposes of this part:

(a) *The Act* or *the MVTPA* means the Motor Vehicle Theft Prevention Act.

(b) *Owner* means the person or persons whose name(s) appear(s) on the certificate of title or to whom the car is registered. In the instance of a new vehicle awaiting sale or lease or in the instance of a used vehicle where the title has been assigned to a dealership, the term ''owner'' shall be construed to mean new and used automobile dealerships.

(c) *The Program* refers to the National Voluntary Motor Vehicle Theft Prevention Program implemented pursuant to the Motor Vehicle Prevention Act.

§ 29.3 Administration by the Bureau of Justice Assistance.

The Director of the Bureau of Justice Assistance shall administer this Program and shall issue guidelines governing the operational aspects of it, including the design and production of a standardized, universally recognizable MVTPA reflective decal, as well as model consent and registration forms.

§ 29.4 Election to participate by states and localities.

(a) Any State or locality that wishes to participate in the program shall register with the BJA and request program enrollment materials. Registration forms will be available upon request. Participation in the program is wholly voluntary on the part of the State or locality.

(b) By electing to participate in the program, a State or locality agrees to do the following:

(1) Make program enrollment materials, including consent forms, available to interested motor vehicle owners;

(2) Collect completed consent forms;

(3) Provide enrolled motor vehicle owners with the decal(s), and license plate(s) applicable to their program condition or conditions and instructions governing program participation;

(4) Take the necessary steps to authorize law enforcement officials to stop motor vehicles enrolled in the program; and

(5) Comply with any other regulation(s) or guideline(s) governing participation in this program.

§ 29.5 Notification of law enforcement officials.

In addition to the actions enumerated in § 29.4(b), as a condition of participating in the program, a State or locality must agree to take reasonable steps to ensure that law enforcement officials under its jurisdiction are familiar with the program and with the conditions under which motor vehicles may be stopped.

§ 29.6 Limited participation by states and localities permitted.

A State or locality need not authorize the stopping of motor vehicles under all sets of conditions specified under the program in order to participate in the program.

§ 29.7 Withdrawal from the program by states and localities.

Any participating State or locality may withdraw from the program at any time by sending written notification to BJA and by notifying participating owners individually by mail of the decision to withdraw.

§ 29.8 Motor vehicle owner participation.

In order to participate in this program, the owner(s) of a motor vehicle must sign a program consent form and register with a participating State or locality. If the vehicle is registered to more than one person, both owners must sign the consent form. By enrolling in the federal program, the owner(s) of the motor vehicle—

(a) State(s) that the vehicle is not normally operated under the specified conditions; and

(b) Agree(s) to:

(1) Display the program decals or devices on the owner's vehicle;

(2) Permit law enforcement officials in any State or locality to stop the motor vehicle if the vehicle is being operated under the specified conditions and take reasonable steps to determine whether the vehicle is being operated by or with the permission of the owner;

(3) Expressly advise any borrower of the vehicle of the existence of this

agreement, and that such user will be subject to being stopped by law enforcement officials if the vehicle is being operated under the specified condition(s) even if the officials have no other basis for believing the vehicle is being operated unlawfully; and

(4) Comply with any other regulation(s) or guideline(s) governing participation in this program.

§ 29.9 Motor vehicles for hire.

(a) Any person who is in the business of renting or leasing motor vehicles and who rents or leases a motor vehicle on which a program decal or device is affixed shall notify the person to whom the motor vehicle is rented or leased about the program, prior to transferring possession of the vehicle.

(b) The notice required by this section shall be printed in bold type in the rental or lease agreement, and on the envelope in which the rental agreement is placed. The notice provision in the rental or lease agreement must utilize a larger font than the standard type in the agreement. The notice must state that the motor vehicle may be stopped by law enforcement officials if it is operated under the conditions specified by the program in which the car is enrolled even if the officials have no other basis for believing that the vehicle is being operated unlawfully.

(c) Failure to provide the notice required by this section to a renter or lessee may result in the assessment of a civil penalty by the Assistant Attorney General, Civil Division, or his or her designee, of an amount not to exceed $5,000. No penalty shall be assessed unless the person charged has been given notice and an opportunity for a hearing of such charge.

§ 29.10 Owner withdrawal from the program.

An owner may withdraw from the program at any time by completely removing the program decal and changing the license plate if necessary. The owner is also encouraged to notify the participating agency in writing of such withdrawal.

§ 29.11 Sale or other transfer of an enrolled vehicle.

Upon the transferral of ownership of an enrolled vehicle, the transferring owner must completely remove the program decals, change the license plate(s) if necessary, and is encouraged to notify the participating agency in writing of the transfer of ownership of the vehicle.

§ 29.12 Specified conditions under which stops may be authorized.

A motor vehicle owner may voluntarily enroll his or her vehicle(s) and give written consent to law enforcement official to stop the vehicle if it is being operated under any or all the conditions set forth in this section. For each condition, the owner(s) must grant consent and affix a separate decal, device, or license plate.

(a) *Time.* A motor vehicle owner may authorize law enforcement officers to stop the enrolled vehicle if it is being operated between the hours of 1:00 AM and 5:00 AM. By enrolling in a program with this condition, the owner must state that the vehicle is not normally operated between the specified hours, and that the owner understands that the operation of the vehicle between those hours provides sufficient grounds for a law enforcement officer to reasonably believe that the vehicle is not being operated by or with the consent of the owner, even if the law enforcement official has no other basis for believing that the vehicle is being operated unlawfully.

(b) *Border crossing or port entry.* A motor vehicle owner may authorize law enforcement officers to stop the enrolled vehicle if it crosses, is about to cross or is about to be transported across a United States land border, or if it enters a United States port. For purposes of this section, the phrase ''about to cross a United States land border'' means the vehicle is operated or transported within one mile of a United States land border. Participating States or localities may implement this provision in accordance with local conditions, provided that a participating State or locality may not extend the applicable geographic area beyond one mile from the United States land border. By enrolling in a

program with this condition, the owner must state that the vehicle is not normally driven across a border or into a port, and that the owner understands that the operation or transport of the vehicle within a mile of a United States land border or into a port provides sufficient grounds for a law enforcement officer to believe that the vehicle is not being operated by or with the consent of the owner even if the law enforcement officer has no other basis for believing that the vehicle is being operated unlawfully.

§ 29.13 No new conditions without consent.

After the program has begun, new conditions under which a vehicle may be stopped may only be added to an existing program if the owner consents to the new condition or conditions.

PART 30—INTERGOVERNMENTAL REVIEW OF DEPARTMENT OF JUSTICE PROGRAMS AND ACTIVITIES

Sec.

30.1 What is the purpose of these regulations?
30.2 What definitions apply to these regulations?
30.3 What programs and activities of the Department are subject to these regulations?
30.4 What are the Attorney General's general responsibilities under the Order?
30.5 What is the Attorney General's obligation with respect to Federal interagency coordination?
30.6 What procedures apply to the selection of programs and activities under these regulations?
30.7 How does the Attorney General communicate with state and local officials concerning the Department's programs and activities?
30.8 How does the Attorney General provide an opportunity to comment on proposed Federal financial assistance and direct Federal development?
30.9 How does the Attorney General receive and respond to comments?
30.10 How does the Attorney General make efforts to accommodate intergovernmental concerns?
30.11 What are the Attorney General's obligations in interstate situations?
30.12 How may a state simplify, consolidate, or substitute federally required state plans?
30.13 May the Attorney General waive any provision of these regulations?

AUTHORITY: Executive Order 12372, July 14, 1982 (47 FR 30959), as amended April 8, 1983 (48 FR 15887); Sec. 401 of the Intergovernmental Cooperation Act of 1968 as amended (31 U.S.C. 6506); Sec. 204 of the Demonstration Cities and Metropolitan Development Act of 1966 as amended (42 U.S.C. 3334).

SOURCE: Order No. 1018–83, 48 FR 29246, June 24, 1983, unless otherwise noted.

§ 30.1 What is the purpose of these regulations?

(a) The regulations in this part implement Executive Order 12372, ''Intergovernmental Review of Federal Programs,'' issued July 14, 1982 and amended on April 8, 1983. These regulations also implement applicable provisions of section 401 of the Intergovernmental Cooperation Act of 1968 and section 204 of the Demonstration Cities and Metropolitan Development Act of 1966.

(b) These regulations are intended to foster an intergovernmental partnership and a strengthened Federalism by relying on state processes and on state, areawide, regional, and local coordination for review of proposed federal financial assistance and direct federal development.

(c) These regulations are intended to aid the internal management of the Department, and are not intended to create any right or benefit enforceable at law by a party against the Department or its officers.

§ 30.2 What definitions apply to these regulations?

Department means the U.S. Department of Justice.

Order means Executive Order 12372, issued July 14, 1982, and amended April 8, 1983 and titled ''Intergovernmental Review of Federal Programs.''

Attorney General means the Attorney General or an official or employee of the Department acting for the Attorney General under a delegation of authority.

State means any of the 50 states, the District of Columbia, the Commonwealth of Puerto Rico, the Commonwealth of the Northern Mariana Islands, Guam, American Samoa, the U.S. Virgin Islands, or the Trust Territory of the Pacific Islands.

§ 30.3 What programs and activities of the Department are subject to these regulations?

The Attorney General publishes in the FEDERAL REGISTER a list of the Department's programs and activities that are subject to these regulations and identifies which of these are subject to the requirements of section 204 of the Demonstration Cities and Metropolitan Development Act.

§ 30.4 What are the Attorney General's general responsibilities under the Order?

(a) The Attorney General provides opportunities for consultation by elected officials of those state and local governments that would provide the non-federal funds for, or that would be directly affected by, proposed federal financial assistance from, or direct federal development by, the Department.

(b) If a state adopts a process under the Order to review and coordinate proposed federal financial assistance and direct federal development, the Attorney General, to the extent permitted by law:

(1) Uses the state process to determine official views of state and local elected officials;

(2) Communicates with state and local elected officials as early in a program planning cycle as is reasonably feasible to explain specific plans and actions;

(3) Makes efforts to accommodate state and local elected officials' concerns with proposed federal financial assistance and direct federal development that are communicated through the state process;

(4) Allows the states to simplify and consolidate existing federally required state plan submissions;

(5) Where state planning and budgeting systems are sufficient and where permitted by law, encourages the substitution of state plans for federally required state plans;

(6) Seeks the coordination of views of affected state and local elected officials in one state with those of another state when proposed federal financial assistance or direct federal development has an impact on interstate metropolitan urban centers or other interstate areas; and

(7) Support state and local governments by discouraging the reauthorization or creations of any planning organization which is federally-funded, which has a limited purpose, and which is not adequately representative of, or accountable to, state or local elected officials.

(c) In considering comments received under these regulations, the Attorney General considers the objectives set forth in 31 U.S.C. 6506(b).

§ 30.5 What is the Attorney General's obligation with respect to Federal interagency coordination?

The Attorney General, to the extent practicable, consults with and seeks advice from all other substantially affected federal departments and agencies in an effort to assure full coordination between such agencies and the Department regarding programs and activities covered under these regulations.

§ 30.6 What procedures apply to the selection of programs and activities under these regulations?

(a) A state may select any program or activity published in the FEDERAL REGISTER in accordance with § 30.3 of this part for intergovernmental review under these regulations. Each state, before selecting programs and activities, shall consult with local elected officials.

(b) Each state that adopts a process shall notify the Attorney General of the Department's programs and activities selected for that process.

(c) A state may notify the Attorney General of changes in its selections at any time. For each change, the state shall submit to the Attorney General an assurance that the state has consulted with local elected officials regarding the change. The Department may establish deadlines by which states are required to inform the Attorney General of changes in their program selections.

(d) The Attorney General uses a State's process as soon as feasible, depending on individual programs and activities, after the Attorney General is notified of its selections.

§ 30.7 How does the Attorney General communicate with state and local officials concerning the Department's programs and activities?

(a) For those programs and activities covered by a state process under § 30.6, the Attorney General, to the extent permitted by law:

(1) Uses the state process to determine views of state and local elected officials; and

(2) Communicates with state and local elected officials, through the state process, as early in a program planning cycle as is reasonably feasible to explain specific plans and actions.

(b) The Attorney General provides notice to directly affected state, areawide, regional, and local entities in a state or proposed federal financial assistance or direct federal development if:

(1) The state has not adopted a process under the Order; or

(2) The assistance or development involves a program or activity not selected for the state process.

This notice may be made by publication in the FEDERAL REGISTER or other means which the Department in its discretion deems appropriate.

§ 30.8 How does the Attorney General provide an opportunity to comment on proposed Federal financial assistance and direct Federal development?

(a) Except in unusual circumstances, the Attorney General gives state processes or directly affected state, areawide, regional, and local officials and entities:

(1) At least 30 days from the date established by the Attorney General to comment on proposed federal financial assistance in the form of noncompeting continuation awards; and

(2) At least 60 days from the date established by the Attorney General to comment on proposed direct federal development or federal financial assistance other than noncompeting continuation awards.

(b) This section also applies to comments in cases in which the review, coordination, and communication with the Department have been delegated.

(c) Applicants for programs and activities subject to section 204 of the Demonstration Cities and Metropolitan Act shall allow areawide agencies a 60-day opportunity for review and comments.

§ 30.9 How does the Attorney General receive and respond to comments?

(a) The Attorney General follows the procedures in § 30.10 if:

(1) A state office or official is designated to act as a single point of contact between a state process and all federal agencies; and

(2) That office or official transmits a state process recommendation for a program selected under § 30.6.

(b)(1) The single point of contact is not obligated to transmit comments from state, areawide, regional, or local officials and entities where there is no state process recommendation.

(2) If a state process recommendation is transmitted by a single point of contact, all comments from state, areawide, regional, and local officials and entities that differ from it must also be transmitted.

(c) If a state has not established a process, or is unable to submit a state process recommendation, state, areawide, regional, and local officials and entities may submit comments either to the applicant or to the Department.

(d) If a program or activity is not selected for a state process, state, areawide, regional, and local officials and entities may submit comments either to the applicant or to the Department. In addition, if a state process recommendation for a nonselected program or activity is transmitted to the Department by the single point of contact, the Attorney General follows the procedures of § 30.10 of this part.

(e) The Attorney General considers comments which do not constitute a state process recommendation submitted under these regulations and for which the Attorney General is not required to apply the procedures of § 30.10 of this part, when such comments are provided by a single point of contact, by the applicant, or directly to the Department by a commenting party.

§ 30.10 How does the Attorney General make efforts to accommodate intergovernmental concerns?

(a) If a state process provides a state process recommendation to the Department through its single point of contact, the Attorney General either:

(1) Accepts the recommendation;

(2) Reaches a mutually agreeable solution with the state process; or

(3) Provides the single point of contact with a written explanation of the decision, in such form as the Attorney General in his or her discretion deems appropriate. The Attorney General may also supplement the written explanation by providing the explanation to the single point of contact by telephone, other telecommunication, or other means.

(b) In any explanation under paragraph (a)(3) of this section, the Attorney General informs the single point of contact that:

(1) The Department will not implement its decision for at least ten days after the single point of contact receives the explanation; or

(2) The Attorney General has reviewed the decision and determined that, because of unusual circumstances, the waiting period of at least ten days is not feasible.

(c) For purposes of computing the waiting period under paragraph (b)(1) of this section, a single point of contact is presumed to have received written notification five days after the date of mailing of such notification.

§ 30.11 What are the Attorney General's obligations in interstate situations?

(a) The Attorney General is responsible for:

(1) Identifying proposed federal financial assistance and direct federal development that have an impact on interstate areas;

(2) Notifying appropriate officials and entities in states which have adopted a process and which select the Department's program or activity;

(3) Making efforts to identify and notify the affected state, areawide, regional, and local officials and entities in those states that have not adopted a process under the Order or do not select the Department's program or activity; and

(4) Responding pursuant to § 30.10 if the Attorney General receives a recommendation from a designated areawide agency transmitted by a single point of contact in cases in which the review, coordination, and communication with the Department have been delegated.

(b) The Attorney General uses the procedures in § 30.10 if a state process provides a state process recommendation to the Department through a single point of contact.

§ 30.12 How may a state simplify, consolidate, or substitute federally required state plans?

(a) As used in this section:

(1) *Simplify* means that a state may develop its own format, choose its own submission date, and select the planning period for a state plan.

(2) *Consolidate* means that a state may meet statutory and regulatory requirements by combining two or more plans into one document and that the state can select the format, submission date, and planning period for the consolidated plan.

(3) *Substitute* means that a state may use a plan or other document that it has developed for its own purposes to meet federal requirements.

(b) If not inconsistent with law, a state may decide to try to simplify, consolidate, or substitute federally required state plans without prior approval by the Attorney General.

(c) The Attorney General reviews each state plan that a state has simplified, consolidated, or substituted and accepts the plan only if its contents meet federal requirements.

§ 30.13 May the Attorney General waive any provision of these regulations?

In an emergency, the Attorney General may waive any provision of these regulations.

PART 31—OJJDP GRANT PROGRAMS

Subpart A—Formula Grants

GENERAL PROVISIONS

Sec.
31.1 General.
31.2 Statutory authority.
31.3 Formula grant plan and applications.

ELIGIBLE APPLICANTS

31.100 Eligibility.
31.101 Designation of State agency.
31.102 State agency structure.
31.103 Membership of supervisory board.

GENERAL REQUIREMENTS

31.200 General.
31.201 Audit.
31.202 Civil rights.
31.203 Open meetings and public access to records.

JUVENILE JUSTICE ACT REQUIREMENTS

31.300 General.
31.301 Funding.
31.302 Applicant State agency.
31.303 Substantive requirements.
31.304 Definitions.

GENERAL CONDITIONS AND ASSURANCES

31.400 Compliance with statute.
31.401 Compliance with other Federal laws, orders, circulars.
31.402 Application on file.
31.403 Civil rights requirements.
31.404 Participation by faith-based organizations.

Subpart B—Juvenile Accountability Incentive Block Grants

31.500 Program purposes
31.501 Eligible applicants
31.502 Assurances and plan information
31.503 Notice of proposed use of funds

AUTHORITY: 42 U.S.C 5601 through 5785; Pub. L. 108–7, 117 Stat. 11; 5 U.S.C. 301.

SOURCE: 60 FR 28440, May 31, 1995, unless otherwise noted.

Subpart A—Formula Grants

GENERAL PROVISIONS

§ 31.1 General.

This subpart defines eligibility and sets forth requirements for application for and administration of formula grants to State governments authorized by part B, subpart I, of the Juvenile Justice and Delinquency Prevention Act.

[60 FR 28440, May 31, 1995, as amended at 64 FR 19676, Apr. 21, 1999]

§ 31.2 Statutory authority.

The Statute establishing the Office of Juvenile Justice and Delinquency Prevention and giving authority to make grants for juvenile justice and delinquency prevention improvement programs is the *Juvenile Justice and Delinquency Prevention Act of 1974*, as amended (42 U.S.C. 5601 *et seq.*).

§ 31.3 Formula grant plan and applications.

Formula Grant Applications for each Fiscal Year should be submitted to OJJDP by August 1st (60 days prior to the beginning of the fiscal year) or within 60 days after the States are officially notified of the fiscal year formula grant allocations. Beginning with FY 1995 and each subsequent fiscal year, all Formula Grant Applications are due no later than March 31 of the fiscal year for which the funds are allocated.

ELIGIBLE APPLICANTS

§ 31.100 Eligibility.

All States as defined by section 103(7) of the JJDP Act.

§ 31.101 Designation of State agency.

The Chief Executive of each State which chooses to apply for a formula grant shall establish or designate a State agency as the sole agency for supervising the preparation and administration of the plan. The plan must demonstrate compliance with administrative and supervisory board membership requirements established by the OJJDP Administrator pursuant to section 299 (c) of the JJDP Act. States must have available for review a copy of the State law or executive order establishing the State agency and its authority.

§ 31.102 State agency structure.

The State agency may be a discrete unit of State government or a division or other component of an existing State crime commission, planning agency or other appropriate unit of

State government. Details of organization and structure are matters of State discretion, provided that the agency:

(a) Is a definable entity in the executive branch with the requisite authority to carry out the responsibilities imposed by the JJDP Act;

(b) Has a supervisory board (i.e., a board of directors, commission, committee, council, or other policy board) which has responsibility for supervising the preparation and administration of the plan and its implementation; and

(c) Has sufficient staff and staff capability to carry out the board's policies and the agency's duties and responsibilities to administer the program, develop the plan, process applications, administer grants awarded under the plan, monitor and evaluate programs and projects, provide administration/support services, and perform such accountability functions as are necessary to the administration of Federal funds, such as grant close-out and audit of subgrant and contract funds. At a minimum, one full-time Juvenile Justice Specialist must be assigned to the Formula Grants Program by the State agency. Where the State does not currently provide or maintain a full-time Juvenile Justice Specialist, the plan must clearly establish and document that the program and administrative support staff resources currently assigned to the program will temporarily meet the adequate staff requirement, and provide an assurance that at least one full-time Juvenile Justice Specialist will be assigned to the Formula Grants Program by the end of FY 1995 (September 30, 1995).

§ 31.103 Membership of supervisory board.

The State advisory group appointed under section 223(a)(3) may operate as the supervisory board for the State agency, at the discretion of the Governor. Where, however, a State has continuously maintained a broad-based law enforcement and criminal justice supervisory board (council) meeting all the requirements of section 402(b)(2) of the Justice System Improvement Act of 1979, and wishes to maintain such a board, such composition shall continue to be acceptable provided that the board's membership includes the chairman and at least two additional citizen members of the State advisory group. For purposes of this requirement a citizen member is defined as any person who is not a full-time government employee or elected official. Any executive committee of such a board must include the same proportion of juvenile justice advisory group members as are included in the total board membership. Any other proposed supervisory board membership is subject to case by case review and approval of the OJJDP Administrator and will require, at a minimum, ''balanced representation'' of juvenile justice interests.

GENERAL REQUIREMENTS

§ 31.200 General.

This subpart sets forth general requirements applicable to formula grant recipients under the JJDP Act of 1974, as amended. Applicants must assure compliance or submit necessary information on these requirements.

[60 FR 28440, May 31, 1995, as amended at 64 FR 19676, Apr. 21, 1999]

§ 31.201 Audit.

The State must assure that it adheres to the audit requirements enumerated in the ''Financial and Administrative Guide for Grants, Guide Manual 7100.1 (current edition). Chapter 8 of the Manual contains a comprehensive statement of audit policies and requirements relative to grantees and subgrantees.

§ 31.202 Civil rights.

(a) To carry out the State's Federal civil rights responsibilities the plan must:

(1) Designate a civil rights contact person who has lead responsibility in insuring that all applicable civil rights requirements, assurances, and conditions are met and who shall act as liaison in all civil rights matters with OJJDP and the OJP Office of Civil Rights Compliance (OCRC); and

(2) Provide the Council's Equal Employment Opportunity Program (EEOP), if required to maintain one under 28 CFR 42.301, *et seq.*, where the application is for $500,000 or more.

(b) The application must provide assurance that the State will:

(1) Require that every applicant required to formulate an EEOP in accordance with 28 CFR 42.201 *et seq.*, submit a certification to the State that it has a current EEOP on file, which meets the requirement therein;

(2) Require that every criminal or juvenile justice agency applying for a grant of $500,000 or more submit a copy of its EEOP (if required to maintain one under 28 CFR 42.301, *et seq.*) to OCRC at the time it submits its application to the State;

(3) Inform the public and subgrantees of affected persons' rights to file a complaint of discrimination with OCRC for investigation;

(4) Cooperate with OCRC during compliance reviews of recipients located within the State; and

(5) Comply, and that its subgrantees and contractors will comply with the requirement that, in the event that a Federal or State court or administrative agency makes a finding of discrimination of the basis of race, color, religion, national origin, or sex (after a due process hearing) against a State or a subgrantee or contractor, the affected recipient or contractor will forward a copy of the finding to OCRC.

§ 31.203 Open meetings and public access to records.

The State must assure that the State agency, its supervisory board established pursuant to section 299(c) and the State advisory group established pursuant to section 223(a)(3) will follow applicable State open meeting and public access laws and regulations in the conduct of meetings and the maintenance of records relating to their functions.

JUVENILE JUSTICE ACT REQUIREMENTS

§ 31.300 General.

This subpart sets forth specific JJDP Act requirements for application and receipt of formula grants.

[60 FR 28440, May 31, 1995, as amended at 64 FR 19676, Apr. 21, 1999]

§ 31.301 Funding.

(a) *Allocation to States.* Funds shall be allocated annually among the States on the basis of relative population of persons under age eighteen. If the amount allocated for Title II (other than parts D and E) of the JJDP Act is less than $75 million, the amount allocated to each State will not be less than $325,000, nor more than $400,000, provided that no State receives less than its allocation for FY 1992. The territories will receive not less than $75,000 or more than $100,000. If the amount appropriated for Title II (other than parts D and E) is $75 million or more, the amount allocated for each State will be not less than $400,000, nor more than $600,000, provided that parts D and E have been funded in the full amounts authorized. For the Territories, the amount is fixed at $100,000. For each of FY's 1994 and 1995, the minimum allocation is established at $600,000 for States and $100,000 for Territories.

(b) *Funds for local use.* At least two-thirds of the formula grant application to the state (other than the section 222(d) State Advisory Group set aside) must be used for programs by local government, local private agencies, and eligible Indian tribes, unless the State applies for and is granted a waiver by the OJJDP. The proportion of pass-through funds to be made available to eligible Indian tribes shall be based upon that proportion of the state youth population under 18 years of age who reside in geographical areas where the tribes perform law enforcement functions. Pursuant to section 223(a)(5)(C) of the JJDP Act, each of the standards set forth in paragraphs (b)(1)(i) through (iii) of this section must be met in order to establish the eligibility of Indian tribes to receive pass through funds:

(1)(i) The tribal entity must be recognized by the Secretary of the Interior as an Indian tribe that performs law enforcement functions as defined in paragraph (b) (2) of this section.

(ii) The tribal entity must agree to attempt to comply with the requirements of section 223(a)(12)(A), (13), and (14) of the JJDP Act; and

(iii) The tribal entity must identify the juvenile justice needs to be served by these funds within the geographical area where the tribe performs law enforcement functions.

(2) *Law enforcement functions* are deemed to include those activities pertaining to the custody of children, including, but not limited to, police efforts to prevent, control, or reduce crime and delinquency or to apprehend criminal and delinquent offenders, and/or activities of adult and juvenile corrections, probation, or parole authorities.

(3) To carry out this requirement, OJJDP will annually provide each state with the most recent Bureau of Census statistics on the number of persons under age 18 living within the state, and the number of persons under age 18 who reside in geographical areas where Indian tribes perform law enforcement functions.

(4) Pass-through funds available to tribal entities under section 223(a)(5)(C) shall be made available within states to Indian tribes, combinations of Indian tribes, or to an organization or organizations designated by such tribe(s), that meet the standards set forth in paragraphs (b)(1)(i)–(iii) of this section. Where the relative number of persons under age 18 within a geographic area where an Indian tribe performs law enforcement functions is too small to warrant an individual subgrant or subgrants, the state may, after consultation with the eligible tribe(s), make pass-through funds available to a combination of eligible tribes within the state, or to an organization or organizations designated by and representing a group of qualifying tribes, or target the funds on the larger tribal jurisdictions within the state.

(5) Consistent with section 223(a)(4) of the JJDP Act, the state must provide for consultation with Indian tribes or a combination of eligible tribes within the state, or an organization or organizations designated by qualifying tribes, in the development of a state plan which adequately takes into account the juvenile justice needs and requests of those Indian tribes within the state.

(c) *Match*. Formula grants under the JJDP Act shall be 100% of approved costs, with the exception of planning and administration funds, which require a 100 percent cash match (dollar for dollar), and construction projects funded under section 299C(a)(2) which also require a 100 percent cash match.

(d) *Funds for administration*. Not more than ten percent of the total annual Formula Grant award may be utilized to develop the annual juvenile justice plan and pay for administrative expenses, including project monitoring. These funds are to be matched on a dollar for dollar basis. The State shall make available needed funds for planning and administration to units of local government on an equitable basis. Each annual application must identify uses of such funds.

(e) *Nonparticipating States*. Pursuant to section 223(d), the OJJDP Administrator shall endeavor to make the fund allotment under section 222(a), of a State which chooses not to participate or loses its eligibility to participate in the formula grant program, directly available to local public and private nonprofit agencies within the nonparticipating State. The funds may be used only for the purpose(s) of achieving deinstitutionalization of status offenders and nonoffenders, separation of juveniles from incarcerated adults, removal of juveniles from adult jails and lockups, and reducing the disproportionate confinement of minority youth in secure facilities. Absent a request for extension which demonstrates compelling circumstances justifying the reallocation of formula grant funds back to the State to which the funds were initially allocated, or the proceedings under section 223(d), formula grant funds allocated to a State which has failed to submit an application, plan, or monitoring data establishing its eligibility for the funds will, beginning with FY 1995 be reallocated to the nonparticipating State program on September 30 of the fiscal year for which the funds were appropriated. Reallocated funds will be competitively awarded to eligible recipients pursuant to program announcements published in the FEDERAL REGISTER.

§ 31.302 Applicant State agency.

(a) Pursuant to section 223(a)(1), section 223(a)(2) and section 299(c) of the JJDP Act, the State must assure that the State agency approved under section 299(c) has been designated as the sole agency for supervising the preparation and administration of the plan

and has the authority to implement the plan.

(b) *Advisory group.* Pursuant to section 223(a)(3) of the JJDP Act, the Chief Executive:

(1) Shall establish an advisory group pursuant to section 223(a)(3) of the JJDP Act. The State shall provide a list of all current advisory group members, indicating their respective dates of appointment and how each member meets the membership requirements specified in this section of the Act.

(2) Should consider, in meeting the statutory membership requirements of section 223(A)(3) (A)–(E), appointing at least one member who represents each of the following: A locally elected official representing general purpose local government; a law enforcement officer; representatives of juvenile justice agencies, including a juvenile or family court judge, a probation officer, a prosecutor, and a person who routinely provides legal representation to youth in juvenile court; a public agency representative concerned with delinquency prevention and treatment; a representative from a private, nonprofit organization, such as a parents group, concerned with teenage drug and alcohol abuse; a high school principal; a recreation director; a volunteer who works with delinquent or at risk youth; a person with a special focus on the family; a youth worker experienced with programs that offer alternatives to incarceration; persons with special competence in addressing programs of school violence and vandalism and alternatives to expulsion and suspension; and persons with knowledge concerning learning disabilities, child abuse, neglect, and youth violence.

(c) The State shall assure that it complies with the Advisory Group financial support requirement of section 222(d) and the composition and function requirements of section 223(a)(3) of the JJDP Act.

§ 31.303 Substantive requirements.

(a) *Assurances.* The State must certify through the provision of assurances that it has complied and will comply (as appropriate) with sections 223(a)(1), (2), (3), (4), (5), (6), (7), (8), (9), (10), (11), (16), (17), (18), (19), (20), (21), (22), and (25), and sections 229 and 261(d), in formulating and implementing the State plan. The Formula Grant Application kit provides a form and guidance for the provision of assurances. OJJDP interprets the section 223(a)(16) assurance as satisfied by an affirmation that State law and/or policy clearly require equitable treatment on the required bases; or by providing in the State plan that the State agency will require an assurance of equitable treatment by all Formula Grant subgrant and contract recipients, and establish as a program goal, in conjunction with the State Advisory Group, the adoption and implementation of a statewide juvenile justice policy that all youth in the juvenile justice system will be treated equitably without regard to gender, race, family income, and mentally, emotionally, or physically handicapping conditions. OJJDP interprets the section 223(a)(25) assurance as satisfied by a provision in the State plan for the State agency and the State Advisory Group to promulgate policies and budget priorities that require the funding of programs that are part of a comprehensive and coordinated community system of services as set forth in section 103(19) of the JJDP Act. This requirement is applicable when a State's formula grant for any fiscal year exceeds 105 percent of the State's formula grant for FY 1992.

(b) *Serious juvenile offender emphasis.* Pursuant to sections 101(a)(10) and 223(a)(10) of the JJDP Act, OJJDP encourages States that have identified serious and violent juvenile offenders as a priority problem to allocate formula grant funds to programs designed for serious and violent juvenile offenders at a level consistent with the extent of the problem as identified through the State planning process. Particular attention should be given to improving prosecution, sentencing procedures, providing resources necessary for effective rehabilitation, and facilitating the coordination of services between the juvenile justice and criminal justice systems.

(c) *Deinstitutionalization of status offenders and non-offenders.* Pursuant to section 223(a)(12)(A) of the JJDP Act, the State shall:

(1) Describe its plan, procedure, and timetable covering the three-year planning cycle, for assuring that the requirements of this section are met. Refer to § 31.303(f)(3) for the rules related to the valid court order exception to this Act requirement.

(2) Describe the barriers the State faces in achieving full compliance with the provisions of this requirement.

(3) *Federal wards*. Apply this requirement to alien juveniles under Federal jurisdiction who are held in State or local facilities.

(4) *DSO compliance*. Those States which, based upon the most recently submitted monitoring report, have been found to be in full compliance with section 223(a)(12)(A) may, in lieu of addressing paragraphs (c)(1) and (2) of this section, provide an assurance that adequate plans and resources are available to maintain full compliance.

(5) Submit the report required under section 223(a)(12)(B) of the Act as part of the annual monitoring report required by section 223(a)(15) of the Act.

(d) *Contact with incarcerated adults*. (1) Pursuant to section 223(a)(13) of the JJDP Act the State shall:

(i) *Separation*. Describe its plan and procedure, covering the three-year planning cycle, for assuring that the requirements of this section are met. The term *contact* includes any physical or sustained sight or sound contact between juvenile offenders in a secure custody status and incarcerated adults, including inmate trustees. A juvenile offender in a secure custody status is one who is physically detained or confined in a locked room or other area set aside or used for the specific purpose of securely detaining persons who are in law enforcement custody. Secure detention or confinement may result either from being placed in such a room or area and/or from being physically secured to a cuffing rail or other stationary object. Sight contact is defined as clear visual contact between incarcerated adults and juveniles within close proximity to each other. Sound contact is defined as direct oral communication between incarcerated adults and juvenile offenders. Separation must be accomplished architecturally or through policies and procedures in all secure areas of the facility which include, but are not limited to, such areas as admissions, sleeping, and shower and toilet areas. Brief and inadvertent or accidental contact between juvenile offenders in a secure custody status and incarcerated adults in secure areas of a facility that are not dedicated to use by juvenile offenders and which are nonresidential, which may include dining, recreational, educational, vocational, health care, sally ports or other entry areas, and passageways (hallways), would not require a facility or the State to document or report such contact as a violation. However, any contact in a dedicated juvenile area, including any residential area of a secure facility, between juveniles in a secure custody status and incarcerated adults would be a reportable violation.

(ii) In those instances where accused juvenile criminal-type offenders are authorized to be temporarily detained in facilities where adults are confined, the State must set forth the procedures for assuring no sight or sound contact between such juveniles and confined adults.

(iii) Describe the barriers which may hinder the separation of alleged or adjudicated criminal type offenders, status offenders and non-offenders from incarcerated adults in any particular jail, lockup, detention or correctional facility.

(iv) Those States which, based upon the most recently submitted monitoring report, have been found to be in compliance with section 223(a)(13) may, in lieu of addressing paragraphs (d)(1)(i), (ii), and (iii) of this section, provide an assurance that adequate plans and resources are available to maintain compliance.

(v) Assure that adjudicated delinquents are not reclassified administratively and transferred to an adult (criminal) correctional authority to avoid the intent of separating juveniles from adult criminals in jails or correctional facilities. A State is not prohibited from placing or transferring an alleged or adjudicated delinquent who reaches the State's age of full criminal responsibility to an adult facility when required or authorized by State law. However, the administrative transfer,

without statutory direction or authorization, of a juvenile offender to an adult correctional authority, or a transfer within a mixed juvenile and adult facility for placement with adult criminals, either before or after a juvenile reaches the age of full criminal responsibility, is prohibited. A State is also precluded from transferring adult offenders to a juvenile correctional authority for placement in a juvenile facility. This neither prohibits nor restricts the waiver or transfer of a juvenile to criminal court for prosecution, in accordance with State law, for a criminal felony violation, nor the detention or confinement of a waived or transferred criminal felony violator in an adult facility.

(2) *Implementation*. The requirement of this provision is to be planned and implemented immediately by each State.

(e) *Removal of juveniles from adult jails and lockups*. Pursuant to section 223(a)(14)of the JJDP Act, the State shall:

(1) Describe its plan, procedure, and timetable for assuring that requirements of this section will be met beginning after December 8, 1985. Refer to § 31.303(f)(4) to determine the regulatory exception to this requirement.

(2) Describe the barriers that a State faces in removing all juveniles from adult jails and lockups. This requirement excepts only those alleged or adjudicated juvenile delinquents placed in a jail or a lockup for up to six hours from the time they enter a secure custody status or immediately before or after a court appearance, those juveniles formally waived or transferred to criminal court and against whom criminal felony charges have been filed, or juveniles over whom a criminal court has original or concurrent jurisdiction and such court's jurisdiction has been invoked through the filing of criminal felony charges.

(3) *Collocated facilities*. (i) Determine whether or not a facility in which juveniles are detained or confined is an adult jail or lockup. The JJDP Act prohibits the secure custody of juveniles in adult jails and lockups, except as otherwise provided under the Act and implementing OJJDP regulations. Juvenile facilities collocated with adult facilities are considered adult jails or lockups absent compliance with criteria established in paragraphs (e)(3)(i)(C)(*1*) through (*4*) of this section.

(A) A collocated facility is a juvenile facility located in the same building as an adult jail or lockup, or is part of a related complex of buildings located on the same grounds as an adult jail or lockup. A complex of buildings is considered ''related'' when it shares physical features such as walls and fences, or services beyond mechanical services (heating, air conditioning, water and sewer), or the specialized services that are allowable under paragraph (e)(3)(i)(C)(*3*) of this section.

(B) The State must determine whether a collocated facility qualifies as a separate juvenile detention facility under the four criteria set forth in paragraphs (e)(3)(i)(C) (*1*) through (*4*) of this section for the purpose of monitoring compliance with section 223(a)(12)(A), (13) and (14) of the JJDP Act.

(C) Each of the following four criteria must be met in order to ensure the requisite separateness of a juvenile detention facility that is collocated with an adult jail or lockup:

(*1*) Separation between juveniles and adults such that there could be no sustained sight or sound contact between juveniles and incarcerated adults in the facility. Separation can be achieved architecturally or through time-phasing of common use nonresidential areas; and

(*2*) Separate juvenile and adult programs, including recreation, education, vocation, counseling, dining, sleeping, and general living activities. There must be an independent and comprehensive operational plan for the juvenile detention facility which provides for a full range of separate program services. No program activities may be shared by juveniles and incarcerated adults. Time-phasing of common use nonresidential areas is permissible to conduct program activities. Equipment and other resources may be used by both populations subject to security concerns; and

(*3*) Separate staff for the juvenile and adult populations, including management, security, and direct care staff. Staff providing specialized services

(medical care, food service, laundry, maintenance and engineering, etc.) who are not normally in contact with detainees, or whose infrequent contacts occur under conditions of separation of juveniles and adults, can serve both populations (subject to State standards or licensing requirements). The day to day management, security and direct care functions of the juvenile detention center must be vested in a totally separate staff, dedicated solely to the juvenile population within the collocated facilities; and

(*4*) In States that have established standards or licensing requirements for juvenile detention facilities, the juvenile facility must meet the standards (on the same basis as a free-standing juvenile detention center) and be licensed as appropriate. If there are no State standards or licensing requirements, OJJDP encourages States to establish administrative requirements that authorize the State to review the facility's physical plant, staffing patterns, and programs in order to approve the collocated facility based on prevailing national juvenile detention standards.

(ii) The State must determine that the four criteria are fully met. It is incumbent upon the State to make the determination through an on-site facility (or full construction and operations plan) review and, through the exercise of its oversight responsibility, to ensure that the separate character of the juvenile detention facility is maintained by continuing to fully meet the four criteria set forth in paragraphs (e)(3)(i)(C) (*1*) through (*4*) of this section.

(iii) Collocated juvenile detention facilities approved by the State and concurred with by OJJDP before December 10, 1996 may be reviewed by the State against the regulatory criteria and OJJDP policies in effect at the time of the initial approval and concurrence or against the regulatory criteria set forth herein, as the State determines. Facilities approved on or after the effective date of this regulation shall be reviewed against the regulatory criteria set forth herein. All collocated facilities are subject to the separate staff requirement established by the 1992 Amendments to the JJDP Act, and set forth in paragraph (e)(3)(i)(C)(*3*) of this section.

(iv) An annual on-site review of the facility must be conducted by the compliance monitoring staff person(s) representing or employed by the State agency administering the JJDP Act Formula Grants Program. The purpose of the annual review is to determine if compliance with the criteria set forth in paragraphs (e)(3)(i)(C) (*1*) through (*4*) of this section is being maintained.

(4) Those States which, based upon the most recently submitted monitoring report, have been found to be in full compliance with section 223(a)(14) may, in lieu of addressing paragraphs (e) (1) and (2) of this section, provide an assurance that adequate plans and resources are available to maintain full compliance.

(f) *Monitoring of jails, detention facilities and correctional facilities.* (1) Pursuant to section 223(a)(15) of the JJDP Act, and except as provided by paragraph (f)(7) of this section, the State shall:

(i) Describe its plan, procedure, and timetable for annually monitoring jails, lockups, detention facilities, correctional facilities and non-secure facilities. The plan must at a minimum describe in detail each of the following tasks including the identification of the specific agency(s) responsible for each task.

(A) *Identification of monitoring universe:* This refers to the identification of all residential facilities which might hold juveniles pursuant to public authority and thus must be classified to determine if it should be included in the monitoring effort. This includes those facilities owned or operated by public and private agencies.

(B) *Classification of the monitoring universe:* This is the classification of all facilities to determine which ones should be considered as a secure detention or correctional facility, adult correctional institution, jail, lockup, or other type of secure or nonsecure facility.

(C) *Inspection of facilities:* Inspection of facilities is necessary to ensure an accurate assessment of each facility's classification and record keeping. The inspection must include:

(*1*) A review of the physical accommodations to determine whether it is a secure or non-secure facility or whether adequate sight and sound separation between juvenile and adult offenders exists and

(*2*) A review of the record keeping system to determine whether sufficient data are maintained to determine compliance with section 223(a) (12), (13) and/or (14).

(D) *Data collection and data verification:* This is the actual collection and reporting of data to determine whether the facility is in compliance with the applicable requirement(s) of section 223(a) (12), (13) and/or (14). The length of the reporting period should be 12 months of data, but in no case less than 6 months. If the data is self-reported by the facility or is collected and reported by an agency other than the State agency designated pursuant to section 223(a)(1) of the JJDP Act, the plan must describe a statistically valid procedure used to verify the reported data.

(ii) Provide a description of the barriers which the State faces in implementing and maintaining a monitoring system to report the level of compliance with section 223(a) (12), (13), and (14) and how it plans to overcome such barriers.

(iii) Describe procedures established for receiving, investigating, and reporting complaints of violation of section 223(a) (12), (13), and (14). This should include both legislative and administrative procedures and sanctions.

(2) For the purpose of monitoring for compliance with section 223(a)(12)(A) of the Act, a secure detention or correctional facility is any secure public or private facility used for the lawful custody of accused or adjudicated juvenile offenders or nonoffenders, or used for the lawful custody of accused or convicted adult criminal offenders. Accused status offenders or nonoffenders in lawful custody can be held in a secure juvenile detention facility for up to twenty-four hours, exclusive of weekends and holidays, prior to an initial court appearance and for an additional twenty-four hours, exclusive of weekends and holidays, following an initial court appearance.

(3) *Valid court order*. For the purpose of determining whether a valid court order exists and a juvenile has been found to be in violation of that valid order all of the following conditions must be present prior to secure incarceration:

(i) The juvenile must have been brought into a court of competent jurisdiction and made subject to an order issued pursuant to proper authority. The order must be one which regulates future conduct of the juvenile. Prior to issuance of the order, the juvenile must have received the full due process rights guaranteed by the Constitution of the United States.

(ii) The court must have entered a judgment and/or remedy in accord with established legal principles based on the facts after a hearing which observes proper procedures.

(iii) The juvenile in question must have received adequate and fair warning of the consequences of violation of the order at the time it was issued and such warning must be provided to the juvenile and to the juvenile's attorney and/or legal guardian in writing and be reflected In the court record and proceedings.

(iv) All judicial proceedings related to an alleged violation of a valid court order must be held before a court of competent jurisdiction. A juvenile accused of violating a valid court order may be held in secure detention beyond the 24-hour grace period permitted for a noncriminal juvenile offender under OJJDP monitoring policy, for protective purposes as prescribed by State law, or to assure the juvenile's appearance at the violation hearing, as provided by State law, if there has been a judicial determination based on a hearing during the 24-hour grace period that there is probable cause to believe the juvenile violated the court order. In such case the juveniles may be held pending a violation hearing for such period of time as is provided by State law, but in no event should detention prior to a violation hearing exceed 72 hours exclusive of nonjudicial days. A juvenile alleged or found in a violation hearing to have violated a Valid Court Order may be held only in a secure juvenile detention or correctional facility, and not in an adult jail or lockup.

(v) Prior to and during the violation hearing the following full due process rights must be provided:

(A) The right to have the charges against the juvenile in writing served upon him a reasonable time before the hearing;

(B) The right to a hearing before a court;

(C) The right to an explanation of the nature and consequences of the proceeding;

(D) The right to legal counsel, and the right to have such counsel appointed by the court if indigent;

(E) The right to confront witnesses;

(F) The right to present witnesses;

(G) The right to have a transcript or record of the proceedings; and

(H) The right of appeal to an appropriate court.

(vi) In entering any order that directs or authorizes the placement of a status offender in a secure facility, the judge presiding over an initial probable cause hearing or violation hearing must determine that all the elements of a valid court order (paragraphs (f)(3)(i), (ii) and (iii) of this section) and the applicable due process rights (paragraph (f)(3)(v) of this section) were afforded the juvenile and, in the case of a violation hearing, the judge must obtain and review a written report that: reviews the behavior of the juvenile and the circumstances under which the juvenile was brought before the court and made subject to such order; determines the reasons for the juvenile's behavior; and determines whether all dispositions other than secure confinement have been exhausted or are clearly inappropriate. This report must be prepared and submitted by an appropriate public agency (other than a court or law enforcement agency).

(vii) A non-offender such as a dependent or neglected child cannot be placed in secure detention or correctional facilities for violating a valid court order.

(4) *Removal exception (section 223(a)(14))*. The following conditions must be met in order for an accused juvenile criminal-type offender, awaiting an initial court appearance, to be detained up to 24 hours (excluding weekends and holidays) in an adult jail or lockup:

(i) The State must have an enforceable State law requiring an initial court appearance within 24 hours after being taken into custody (excluding weekends and holidays);

(ii) The geographic area having jurisdiction over the juvenile is outside a metropolitan statistical area pursuant to the Bureau of Census' current designation;

(iii) A determination must be made that there is no existing acceptable alternative placement for the juvenile pursuant to criteria developed by the State and approved by OJJDP;

(iv) The adult jail or lockup must have been certified by the State to provide for the sight and sound separation of juveniles and incarcerated adults;

(v) The State must provide documentation that the conditions in paragraphs(f)(4)(i) through (iv) of this section have been met and received prior approval from OJJDP. OJJDP strongly recommends that jails and lockups that incarcerate juveniles be required to provide youth specific admissions screening and continuous visual supervision of juveniles incarcerated pursuant to this exception; and

(vi) Pursuant to section 223(a)(14) of the JJDP Act, the nonMSA (low population density) exception to the jail and lockup removal requirement as described in paragraphs (f)(4) (i) through (v) of this section shall remain in effect through 1997, and shall allow for secure custody beyond the twenty-four hour period described in paragraph (f)(4)(i) of this section when the facility is located where conditions of distance to be traveled or the lack of highway, road, or other ground transportation do not allow for court appearances within twenty-four hours, so that a brief (not to exceed an additional forty-eight hours) delay is excusable; or the facility is located where conditions of safety exist (such as severely adverse, life-threatening weather conditions that do not allow for reasonably safe travel), in which case the time for an appearance may be delayed until twenty-four hours after the time that such conditions allow for reasonably safe travel.

States may use these additional statutory allowances only where the precedent requirements set forth in paragraphs (f)(4) (i) through (v) of this section have been complied with. This may necessitate statutory or judicial (court rule or opinion) relief within the State from the twenty-four hour initial court appearance standard required by paragraph (f)(4)(i) of this section.

(5) *Reporting requirement.* The State shall report annually to the Administrator of OJJDP on the results of monitoring for section 223(a)(12),(13), and (14) of the JJDP Act. The reporting period should provide 12 months of data, but shall not be less than six months. The report shall be submitted to the Administrator of OJJDP by December 31 of each year.

(i) To demonstrate the extent of compliance with section 223(a)(12)(A) of the JJDP Act, the report must include, at a minimum, the following information for the current reporting period:

(A) Dates covered by the current reporting period;

(B) Total number of public and private secure detention and correctional facilities, the total number reporting, and the number inspected on-site;

(C) The total number of accused status offenders and nonoffenders, including out-of-State runaways and Federal wards, held in any secure detention or correctional facility for longer than twenty-four hours (not including weekends or holidays), excluding those held pursuant to the valid court order provision as set forth in paragraph (f)(3) of this section or pursuant to section 922(x) of title 18, United States Code (which prohibits the possession of a handgun by a juvenile), or a similar State law. A juvenile who violates this statute, or a similar state law, is excepted from the deinstitutionalization of status offenders requirement;

(D) The total number of accused status offenders (including valid court order violators, out of state runaways, and Federal wards, but excluding Title 18 922(x) violators) and nonoffenders securely detained in any adult jail, lockup, or nonapproved collocated facility for any length of time;

(E) The total number of adjudicated status offenders and nonoffenders, including out-of-state runaways and Federal wards, held for any length of time in a secure detention or correctional facility, excluding those held pursuant to the valid court order provision or pursuant to title 18 U.S.C. section 922(x);

(F) The total number of status offenders held in any secure detention or correctional facility pursuant to the valid court order provision set forth in paragraph (f)(3) of this section; and

(G) The total number of juvenile offenders held pursuant to title 18 U.S.C. section 922(x).

(ii) To demonstrate the extent to which the provisions of section 223(a)(12)(B) of the JJDP Act are being met, the report must include the total number of accused and adjudicated status offenders and nonoffenders placed in facilities that are:

(A) Not near their home community;

(B) Not the least restrictive appropriate alternative; and

(C) Not community-based.

(iii) To demonstrate the extent of compliance with section 223(a)(13) of the JJDP Act, the report must include, at a minimum, the following information for the current reporting period:

(A) Dates covered by the current reporting period;

(B) The total number of facilities used to detain or confine both juvenile offenders and adult criminal offenders during the past 12 months and the number inspected on-site;

(C) The total number of facilities used for secure detention and confinement of both juvenile offenders and adult criminal offenders which did not provide sight and sound separation;

(D) The total number of juvenile offenders and nonoffenders not separated from adult criminal offenders in facilities used for the secure detention and confinement of both juveniles and adults;

(E) The total number of State approved juvenile detention centers located within the same building or on the same grounds as an adult jail or lockup, including a list of such facilities;

(F) The total number of juveniles detained in State approved collocated facilities that were not separated from the management, security or direct care staff of the adult jail or lockup;

(G) The total number of juvenile detention centers located within the same building or on the same grounds as an adult jail or lockup that have not been approved by the State, including a list of such facilities; and

(H) The total number of juveniles detained in collocated facilities not approved by the State that were not sight and sound separated from adult criminal offenders.

(iv) To demonstrate the extent of compliance with section 223(a)(14) of the JJDP Act, the report must include, at a minimum, the following information for the current reporting period:

(A) Dates covered by the current reporting period;

(B) The total number of adult jails in the State AND the number inspected on-site;

(C) The total number of adult lockups in the State AND the number inspected on-site;

(D) The total number of adult jails holding juveniles during the past twelve months;

(E) The total number of adult lockups holding juveniles during the past twelve months;

(F) The total number of accused juvenile criminal-type offenders held securely in adult jails, lockups, and unapproved collocated facilities in excess of six hours, including those held pursuant to the ''removal exception'' as set forth in paragraph (f)(4) of this section;

(G) The total number of accused juvenile criminal-type offenders held securely in adult jails, lockups and unapproved collocated facilities for less than six hours for purposes other than identification, investigations, processing, release to parent(s), transfer to court, or transfer to a juvenile facility following initial custody;

(H) The total number of adjudicated juvenile criminal-type offenders held securely in adult jails or lockups and unapproved collocated facilities in excess of six hours prior to or following a court appearance or for any length of time not related to a court appearance;

(I) The total number of accused and adjudicated status offenders (including valid court order violators) and non-offenders held securely in adult jails, lockups and unapproved collocated facilities for any length of time;

(J) The total number of adult jails, lockups, and unapproved collocated facilities in areas meeting the ''removal exception'' as noted in paragraph (f)(4) of this section, including a list of such facilities and the county or jurisdiction in which each is located;

(K) The total number of juveniles accused of a criminal-type offense who were held in excess of six hours but less than 24 hours in adult jails, lockups and unapproved collocated facilities pursuant to the ''removal exception'' as set forth in paragraph (f)(4) of this section;

(L) The total number of juveniles accused of a criminal-type offense who were held in excess of 24 hours, but not more than an additional 48 hours, in adult jails, lockups and unapproved collocated facilities pursuant to the ''removal exception'' as noted in paragraph (f)(4) of this section, due to conditions of distance or lack of ground transportation; and

(M) The total number of juveniles accused of a criminal-type offense who were held in excess of 24 hours, but not more than an additional 24 hours after the time such conditions as adverse weather allow for reasonably safe travel, in adult jails, lockups and unapproved collocated facilities, in areas meeting the ''removal exception'' as noted in paragraph (f)(4) of this section.

(6) *Compliance*. The State must demonstrate the extent to which the requirements of sections 223(a)(12)(A), (13), (14), and (23) of the Act are met. If the State fails to demonstrate full compliance with sections 223(a)(12)(A) and (14), and compliance with sections 223(a)(13) and (23) by the end of the fiscal year for any fiscal year beginning with fiscal year 1994, the State's allotment under section 222 will be reduced by twenty five percent for each such failure, provided that the State will lose its eligibility for any allotment unless: the State agrees to expend all remaining funds (except planning and administration, State advisory group set-aside funds and Indian tribe pass-through funds) for the purpose of

achieving compliance with the mandate(s) for which the State is in noncompliance; or the Administrator makes discretionary determination that the State has substantially complied with the mandate(s) for which there is noncompliance and that the State has made through appropriate executive or legislative action, an unequivocal commitment to achieving full compliance within a reasonable time. In order for a determination to be made that a State has substantially complied with the mandate(s), the State must demonstrate that it has: Diligently carried out the plan approved by OJJDP; demonstrated significant progress toward full compliance; submitted a plan based on an assessment of current barriers to DMC; and provided an assurance that added resources will be expended, be it formula grants or other funds, to achieve compliance. Where a State's allocation is reduced, the amount available for planning and administration and the required pass-through allocation, other than State advisory group set-aside, will be reduced because they are based on the reduced allocation.

(i) Full compliance with section 223(a)(12)(A) is achieved when a State has removed 100 percent of status offenders and nonoffenders from secure detention and correctional facilities or can demonstrate full compliance with de minimis exceptions pursuant to the policy criteria contained in the FEDERAL REGISTER of January 9, 1981 (copies are available from the Office of General Counsel, Office of Justice Programs, 633 Indiana Ave. NW., Washington, DC 20531).

(ii) Compliance with section 223(a)(13) has been achieved when a State can demonstrate that:

(A) The last submitted monitoring report, covering a full 12 months of data, demonstrates that no juveniles were incarcerated in circumstances that were in violation of section 223(a)(13); or

(B)(*1*) The instances of noncompliance reported in the last submitted monthly report do not indicate a pattern or practice but rather constitute isolated instances; and

(*2*)(*i*) Where all instances of noncompliance reported were in violation of or departure from State law, rule, or policy that clearly prohibits the incarceration of all juvenile offenders in circumstances that would be in violation of section 223(a)(13), existing enforcement mechanisms are such that the instances of noncompliance are unlikely to recur in the future; or

(*ii*) An acceptable plan has been developed to eliminate the noncompliant incidents.

(iii)(A) Full compliance is achieved when a state demonstrates that the last submitted monitoring report, covering 12 months of actual data, demonstrates that no juveniles were held in adult jails or lockups in circumstances that were in violation of section 223(a)(14).

(B) Full compliance with de minimis exceptions is achieved when a State demonstrates that it has met the standard set forth in either of paragraphs (f)(6)(iii)(B) (*1*) or (*2*) of this section:

(*1*) *Substantive de minimis standard*. To comply with this standard the State must demonstrate that each of the following requirements have been met:

(*i*) State law, court rule, or other statewide executive or judicial policy clearly prohibits the detention or confinement of all juveniles in circumstances that would be in violation of section 223(a)(14);

(*ii*) All instances of noncompliance reported in the last submitted monitoring reported were in violation of or departures from, the State law, rule, or policy referred to in paragraph (f)(6)(iii)(B)(*1*)(*i*) of this section;

(*iii*) The instances of noncompliance do not indicate a pattern or practice but rather constitute isolated instances;

(*iv*) Existing mechanisms for the enforcement of the State law, rule or policy referred to in paragraph (f)(6)(iii)(B)(*1*)(*i*) of this section are such that the instances of noncompliance are unlikely to recur in the future; and

(*v*) An acceptable plan has been developed to eliminate the noncompliant incidents and to monitor the existing mechanism referred to in paragraph (f)(6)(iii)(B)(*1*)(*iv*) of this section.

(*2*) *Numerical de minimis standard*. To comply with this standard the State

must demonstrate that each of the following requirements under paragraphs (f)(6)(iii)(B)(2) (*i*) and (*ii*) of this section have been met:

(*i*) The incidents of noncompliance reported in the State's last submitted monitoring report do not exceed an annual rate of 9 per 100,000 juvenile population of the State; and

(*ii*) An acceptable plan has been developed to eliminate the noncompliant incidents through the enactment or enforcement of State law, rule, or statewide executive or judicial policy, education, the provision of alternatives, or other effective means.

(*iii*) *Exception*. When the annual rate for a State exceeds 9 incidents of noncompliance per 100,000 juvenile population, the State will be considered ineligible for a finding of full compliance with de minimis exceptions under the numerical de minimis standard unless the State has recently enacted changes in State law which have gone into effect and which the State demonstrates can reasonably be expected to have a substantial, significant and positive impact on the state's achieving full (100%) compliance or full compliance with de minimis exceptions by the end of the monitoring period immediately following the monitoring period under consideration.

(*iv*) *Progress*. Beginning with the monitoring report due by December 31, 1990, any State whose prior full compliance status is based on having met the numerical de minimis standard set forth in paragraph (f)(6)(iii)(B)(*2*)(*i*) of this § 31.303, must annually demonstrate, in its request for a finding of full compliance with de minimis exceptions, continued and meaningful progress toward achieving full (100%) compliance in order to maintain eligibility for a continued finding of full compliance with de minimis exceptions.

(*v*) *Request submission*. Determinations of full compliance and full compliance with de minimis exceptions are made annually by OJJDP following submission of the monitoring report due by December 31 of each calendar year. Any State reporting less than full (100%) compliance in any annual monitoring report may request a finding of full compliance with de minimis exceptions under paragraph (f)(6)(iii)(B) (*1*) or (*2*) of this section. The request may be submitted in conjunction with the monitoring report, as soon thereafter as all information required for a determination is available, or be included in the annual State plan and application for the State's formula grant award.

(C) *Waiver*. Failure to achieve full compliance as defined in this section shall terminate any State's eligibility for FY 1993 and prior year formula grant funds unless the Administrator of OJJDP waives termination of the State's eligibility. ln order to be eligible for this waiver of termination, a State must request a waiver and demonstrate that it meets the standards set forth in paragraphs (f)(6)(iii)(C) (1)–(7) of this section:

(*1*) Agrees to expend all of its formula grant award except planning and administration, advisory group set-aside, and Indian tribe pass-through funds, to achieve compliance with section 223(a)(14); and

(*2*) Removed all status and nonoffender juveniles from adult jails and lockups. Compliance with this standard requires that the last submitted monitoring report demonstrate that no status offender (including those accused of or adjudicated for violating a valid court order) or nonoffender juveniles were securely detained in adult jails or lock-ups for any length of time; or that all status offenders and nonoffenders securely detained in adult jails and lock-ups for any length of time were held in violation of an enforceable State law and did not constitute a pattern or practice within the State; and

(*3*) Made meaningful progress in removing juvenile criminal-type offenders from adult jails and lockups. Compliance with this standard requires the State to document a significant reduction in the number of jurisdictions securely detaining juvenile criminal-type offenders in violation of section 223 (a)(14) of the JJDP Act; or a significant reduction in the number of facilities securely detaining such juveniles; or a significant reduction in the average length of time each juvenile criminal-type offender is securely detained in an adult jail or lock-up; or State legislation has recently been enacted and taken effect and which the State demonstrates will significantly impact the

secure detention of juvenile criminal-type offenders in adult jails and lockups; and

(*4*) Diligently carried out the State's jail and lockup removal plan approved by OJJDP. Compliance with this standard requires that actions have been undertaken to achieve the State's jail and lock-up removal goals and objectives within approved time lines, and that the State Advisory Group, required by section 223 (a)(3) of the JJDP Act, has maintained an appropriate involvement in developing and/or implementing the State's plan; and

(*5*) Submitted an acceptable plan, based on an assessment of current jail and lockup removal barriers within the State, to eliminate noncompliant incidents; and

(*6*) Achieved compliance with section 223(a)(15) of the JJDP Act; and

(*7*) Demonstrates an unequivocal commitment, through appropriate executive or legislative action, to achieving full compliance.

(D) *Waiver maximum.* A State may receive a waiver of termination of eligibility from the Administrator under paragraph (f)(6)(iii)(C) of this section for a combined maximum of four Formula Grant Awards through Fiscal Year 1993. No additional waivers will be granted.

(7) *Monitoring report exemption.* States which have been determined by the OJJDP Administrator to have achieved full compliance with sections 223(a)(12)(A), (a)(14), and compliance with section 223(a)(13) of the JJDP and wish to be exempted from the annual monitoring report requirements must submit a written request to the OJJDP Administrator which demonstrates that:

(i) The State provides for an adequate system of monitoring jails, law enforcement lockup, detention facilities, to enable an annual determination of State compliance with sections 223(a)(12)(A), (13), and (14) of the JJDP Act;

(ii) State legislation has been enacted which conforms to the requirements of Sections 223(a)(12)(A), (13), and (14) of the JJDP Act; and

(iii) The enforcement of the legislation is statutorily or administratively prescribed, specifically providing that:

(A) Authority for enforcement of the statute is assigned;

(B) Time frames for monitoring compliance with the statute are specified; and

(C) Adequate procedures are set forth for enforcement of the statute and the imposition of sanctions for violations.

(g) *Juvenile crime analysis.* Pursuant to section 223(a)(8), the State must conduct an analysis of juvenile crime problems, including juvenile gangs that commit crimes, and juvenile justice and delinquency prevention needs within the State, including those geographical areas in which an Indian tribe performs law enforcement functions. The analysis and needs assessment must include educational needs, gender specific services, delinquency prevention and treatment services in rural areas, and mental health services available to juveniles in the juvenile justice system. The analysis should discuss barriers to accessing services and provide a plan to provide such services where needed.

(1) *Analysis.* The analysis must be provided in the multiyear application. A suggested format for the analysis is provided in the Formula Grant Application Kit.

(2) *Product.* The product of the analysis is a series of brief written problem statements set forth in the application that define and describe the priority problems.

(3) *Programs.* Applications are to include descriptions of programs to be supported with JJDP Act formula grant funds. A suggested format for these programs is included in the application kit.

(4) *Performance indicators.* A list of performance indicators must be developed and set forth for each program. These indicators show what data will be collected at the program level to measure whether objectives and performance goals have been achieved and should relate to the measures used in the problem statement and statement of program objectives.

(h) *Annual performance report.* Pursuant to section 223(a) and section 223(a)(22) the State plan shall provide for submission of an annual performance report. The State shall report on its progress in the implementation of

the approved programs, described in the three-year plan. The performance indicators will serve as the objective criteria for a meaningful assessment of progress toward achievement of measurable goals. The annual performance report shall describe progress made in addressing the problem of serious juvenile crime, as documented in the juvenile crime analysis pursuant to section 223(a)(8)(A). The annual performance report must be submitted to OJJDP no later than June 30 and address all formula grant activities carried out during the previous complete calendar year, federal fiscal year, or State fiscal year for which information is available, regardless of which year's formula grant funds were used to support the activities being reported on, e.g., during a reporting period, activities may have been funded from two or more formula grant awards.

(i) *Technical assistance.* States shall include, within their plan, a description of technical assistance needs. Specific direction regarding the development and inclusion of all technical assistance needs and priorities will be provided in the ''Application Kit for Formula Grants under the JJDPA.''

(j) *Minority detention and confinement.* Pursuant to section 223(a)(23) of the JJDP Act, States must demonstrate specific efforts to reduce the proportion of juveniles detained or confined in secure detention facilities, secure correctional facilities, jails and lockups who are members of minority groups if such proportion exceeds the proportion such groups represent in the general population, viz., in most States, youth between ages ten-seventeen are subject to secure custody. It is essential that States approach this statutory mandate in a comprehensive manner. The purpose of the statute and the regulation in this part is to encourage States to address, programmatically, any features of its justice system, and related laws and policies, that may account for the disproportionate detention or confinement of minority juveniles in secure detention facilities, secure correctional facilities, jails, and lockups. The disproportionate minority confinement core requirement neither establishes nor requires numerical standards or quotas in order for a State to achieve or maintain compliance. Compliance with this provision is achieved when a State meets the requirements set forth in paragraphs (j)(1) through (3) of this section:

(1) *Identification.* Provide quantifiable documentation (State, county and local level) in the State's FY 1994 Formula Grant Plan (and all subsequent Multi-Year Plans) Juvenile Crime Analysis and Needs Assessment to determine whether minority juveniles are disproportionately detained or confined in secure detention and correctional facilities, jails and lockups in relation to their proportion of the State juvenile population. Guidelines are provided in the OJJDP Disproportionate Minority Confinement Technical Assistance Manual (see Phase I Matrix). Where quantifiable documentation is not available to determine if disproportionate minority confinement exists in secure detention and correctional facilities, jails and lockups, the State must provide a time-limited plan of action, not to exceed six months, for developing and implementing a system for the ongoing collection, analysis and dissemination of information regarding minorities for those facilities where documentation does not exist.

(2) *Assessment.* Each State's FY 1994 Formula Grant Plan must provide a completed assessment of disproportionate minority confinement. Assessments must, at minimum, identify and explain differences in arrest, diversion and adjudication rates, court dispositions other than incarceration, the rates and periods of prehearing detention in and dispositional commitments to secure facilities of minority youth in the juvenile justice system, and transfers to adult court (see Phase II Matrix). If a completed assessment is not available, the State must submit a time-limited plan (not to exceed twelve months from submission of the Formula Grant Application) for completing the assessment.

(3) *Intervention.* Each State's FY 1995 Formula Grant Plan must, where disproportionate confinement has been demonstrated, provide a time-limited plan of action for reducing the disproportionate confinement of minority

juveniles in secure facilities. The intervention plan shall be based on the results of the assessment, and must include, but not be limited to the following:

(i) *Diversion*. Increasing the availability and improving the quality of diversion programs for minorities who come in contact with the juvenile justice system, such as police diversion programs;

(ii) *Prevention*. Providing developmental, operational, and assessment assistance (financial and/or technical) for prevention programs in communities with a high percentage of minority residents with emphasis upon support for community-based organizations (including non-traditional organizations) that serve minority youth;

(iii) *Reintegration*. Providing developmental, operational, and assessment assistance (financial and/or technical) for programs designed to reduce recidivism by facilitating the reintegration of minority youth in the community following release from dispositional commitments to reduce recidivism;

(iv) *Policies and procedures*. Providing financial and/or technical assistance that addresses necessary changes in statewide and local, executive, judicial, and legal representation policies and procedures; and

(v) *Staffing and training*. Providing financial and/or technical assistance that addresses staffing and training needs that will positively impact the disproportionate confinement of minority youth in secure facilities.

(4) The time-limited plans of action set forth in paragraphs (j) (1), (2) and (3) of this section must include a clear indication of current and future barriers; which agencies, organizations, or individual(s) will be responsible for taking what specific actions; when; and what the anticipated outcomes are. The interim and final outcomes from implementation of the time-limited plan of action must be reported in each State's Multi-Year Plans and Annual Plan Updates. Final outcomes for individual project awards are to be included with each State's annual performance report (See paragraph (h) of this section).

(5) Technical assistance is available through the OJJDP Technical Assistance Contract to help guide States with the data collection and analysis, and with programmatic elements of this requirement. Information from the OJJDP Special Emphasis Initiative on Disproportionate Minority Confinement pilot sites will be disseminated as it becomes available.

(6) For purposes of this statutory mandate, minority populations are defined as: African-Americans, American Indians, Asians, Pacific Islanders, and Hispanics.

(k) Pursuant to section 223(a)(24) of the JJDP Act, states shall agree to other terms and conditions as the Administrator may reasonably prescribe to assure the effectiveness of programs assisted under the Formula Grant.

[60 FR 28440, May 31, 1995, as amended at 61 FR 65138, Dec. 10, 1996]

§ 31.304 Definitions.

(a) *Private agency*. A private non-profit agency, organization or institution is:

(1) Any corporation, foundation, trust, association, cooperative, or accredited institution of higher education not under public supervision or control; and

(2) Any other agency, organization or institution which operates primarily for scientific, education, service, charitable, or similar public purposes, but which is not under public supervision or control, and no part of the net earnings of which inures or may lawfully inure to the benefit of any private shareholder or individual, and which has been held by IRS to be tax-exempt under the provisions of section 501(c)(3) of the 1954 Internal Revenue Code.

(b) *Secure*. As used to define a detention or correctional facility this term includes residential facilities which include construction features designed to physically restrict the movements and activities of persons in custody such as locked rooms and buildings, fences, or other physical structures. It does not include facilities where physical restriction of movement or activity is provided solely through facility staff.

(c) *Facility*. A place, an institution, a building or part thereof, set of buildings or an area whether or not enclosing a building or set of buildings which is used for the lawful custody and

treatment of juveniles and may be owned and/or operated by public and private agencies.

(d) *Juvenile who is accused of having committed an offense*. A juvenile with respect to whom a petition has been filed In the juvenile court or other action has occurred alleging that such juvenile is a juvenile offender, i.e., a criminal-type offender or a status offender, and no final adjudication has been made by the juvenile court.

(e) *Juvenile who has been adjudicated as having committed an offense*. A juvenile with respect to whom the juvenile court has determined that such juvenile is a juvenile offender, i.e., a criminal-type offender or a status offender.

(f) *Juvenile offender*. An individual subject to the exercise of juvenile court jurisdiction for purposes of adjudication and treatment based on age and offense limitations by defined as State law, i.e., a criminal-type offender or a status offender.

(g) *Criminal-type offender*. A juvenile offender who has been charged with or adjudicated for conduct which would, under the law of the jurisdiction in which the offense was committed, be a crime if committed by an adult.

(h) *Status offender*. A juvenile offender who has been charged with or adjudicated for conduct which would not, under the law of the jurisdiction in which the offense was committed, be a crime if committed by an adult.

(i) *Non-offender*. A juvenile who is subject to the jurisdiction of the juvenile court, usually under abuse, dependency, or neglect statutes for reasons other than legally prohibited conduct of the juvenile.

(j) *Lawful custody*. The exercise of care, supervision and control over a juvenile offender or non-offender pursuant to the provisions of the law or of a judicial order or decree.

(k) *Other individual accused of having committed a criminal offense*. An individual, adult or juvenile, who has been charged with committing a criminal offense in a court exercising criminal jurisdiction.

(l) *Other individual convicted of a criminal offense*. An individual, adult or juvenile, who has been convicted of a criminal offense in court exercising criminal jurisdiction.

(m) *Adult jail*. A locked facility, administered by State, county or local law enforcement and correctional agencies, the purpose of which is to detain adults charged with violating criminal law, pending trial. Also considered as adult jails are those facilities used to hold convicted adult criminal offenders sentenced for less than one year.

(n) *Adult lockup*. Similar to an adult jail except that an adult lockup is generally a municipal or police facility of a temporary nature which does not hold persons after they have been formally charged.

(o) *Valid court order*. The term means a court order given by a juvenile court judge to a juvenile who has been brought before the court and made subject to a court order. The use of the word ''valid'' permits the incarceration of juveniles for violation of a valid court order only if they received their full due process rights as guaranteed by the Constitution of the United States.

(p) *Local private agency*. For the purposes of the pass-through requirement of section 223(a)(5), a local private agency is defined as a private non-profit agency or organization that provides program services within an identifiable unit or a combination of units of general local government.

GENERAL CONDITIONS AND ASSURANCES

§ 31.400 Compliance with statute.

The applicant State must assure and certify that the State and its subgrantees and contractors will comply with applicable provisions of the Omnibus Crime Control and Safe Streets Act of 1968, Pub. L. 90–351, as amended, and with the provisions of the Juvenile Justice and Delinquency Prevention Act of 1974, Pub. L. 93–415, as amended, and the provisions of the current edition of OJP Financial and Administrative Guide for Grants, M7100.1.

§ 31.401 Compliance with other Federal laws, orders, circulars.

The applicant State must further assure and certify that the State and its subgrantees and contractors will adhere to other applicable Federal laws,

orders and OMB circulars. These general Federal laws and regulations are described in greater detail in the Financial and Administrative Guide for Grants, M7100.1, and the Formula Grant Application Kit.

§ 31.402 Application on file.

Any Federal funds awarded pursuant to an application must be distributed and expended pursuant to and in accordance with the programs contained in the applicant State's current approved application. Any departures therefrom, other than to the extent permitted by current program and fiscal regulations and guidelines, must be submitted for advance approval by the Administrator of OJJDP.

§ 31.403 Civil rights requirements.

The State assures that it will comply, and that subgrantees and contractors will comply, with all applicable Federal non-discrimination requirements, including:

(a) Section 809(c) of the Omnibus Crime Control and Safe Streets Act as 1968, as amended, and made applicable by section 299(A) of the Juvenile Justice and Delinquency Prevention Act of 1974, as amended;

(b) Title VI of the Civil Rights Act of 1964, as amended;

(c) Section 504 of the Rehabilitation Act of 1973, as amended;

(d) Title IX of the Education Amendments of 1972;

(e) The Age Discrimination Act of 1975;

(f) The Department of Justice Non-Discrimination regulations, 28 CFR part 42, subparts C, D, E, and G;

(g) The Department of Justice regulations on disability discrimination, 28 CFR parts 35 and 39; and

(h) Subtitle A, title II of the Americans with Disabilities Act (ADA) of 1990.

§ 31.404 Participation by faith-based organizations.

The funds provided under this part shall be administered in compliance with the standards set forth in part 38 (Equal Treatment for Faith-based Organizations) of this chapter.

[Order No. 2703–2004, 69 FR 2838, Jan. 21, 2004]

Subpart B—Juvenile Accountability Incentive Block Grants

SOURCE: 64 FR 19676, Apr. 21, 1999, unless otherwise noted.

§ 31.500 Program purposes.

Funds are available under the Juvenile Accountability Incentive Block Grants (JAIBG) in FY 1998, FY 1999, and each subsequent fiscal year as funds are made available, for State and local grants to support the following program purposes:

(a) *Program purpose no. 1:* Building, expanding, renovating, or operating temporary or permanent juvenile correction or detention facilities, including the training of correctional personnel;

(b) *Program purpose no. 2:* Developing and administering accountability-based sanctions for juvenile offenders;

(c) *Program purpose no. 3:* Hiring additional juvenile judges, probation officers, and court-appointed defenders, and funding pre-trial services for juveniles, to ensure the smooth and expeditious administration of the juvenile justice system;

(d) *Program purpose no. 4:* Hiring additional prosecutors, so that more cases involving violent juvenile offenders can be prosecuted and backlogs reduced;

(e) *Program purpose no. 5:* Providing funding to enable prosecutors to address drug, gang, and youth violence more effectively;

(f) *Program purpose no. 6:* Providing funding for technology, equipment, and training to assist prosecutors in identifying and expediting the prosecution of violent juvenile offenders;

(g) *Program purpose no. 7:* Providing funding to enable juvenile courts and juvenile probation offices to be more effective and efficient in holding juvenile offenders accountable and reducing recidivism;

(h) *Program purpose no. 8:* The establishment of court-based juvenile justice programs that target young firearms offenders through the establishment of juvenile gun courts for the adjudication and prosecution of juvenile firearms offenders;

(i) *Program purpose no. 9:* The establishment of drug court programs for juveniles so as to provide continuing judicial supervision over juvenile offenders with substance abuse problems and to provide the integrated administration of other sanctions and services;

(j) *Program purpose no. 10:* Establishing and maintaining interagency information sharing programs that enable the juvenile and criminal justice system, schools, and social services agencies to make more informed decisions regarding the early identification, control, supervision, and treatment of juveniles who repeatedly commit serious delinquent or criminal acts;

(k) *Program purpose no. 11:* Establishing and maintaining accountability-based programs that work with juvenile offenders who are referred by law enforcement agencies, or which are designed, in cooperation with law enforcement officials, to protect students and school personnel from drug, gang, and youth violence; and,

(l) *Program purpose no. 12:* Implementing a policy of controlled substance testing for appropriate categories of juveniles within the juvenile justice system.

§ 31.501 Eligible applicants.

(a) *Eligible applicants.* Eligible applicants in FY 1998, FY 1999, and each subsequent fiscal year as funds are made available, are States whose Governor (or other Chief Executive Officer for the eligible jurisdictions that are not one of the 50 States but defined as such for purposes of this program) certifies, consistent with guidelines established by the Attorney General in consultation with Congress and incorporated into OJJDP's Program Guidance Manual, that the State is actively considering (or already has in place), or will consider within one year from the date of such certification, legislation, policies, or practices which, if enacted, would qualify the State for a grant. Specific information regarding qualifications can be found in the JAIBG Program Guidance Manual.

(b) *Qualifications.* Each State Chief Executive Officer must designate a state agency to apply for, receive, and administer JAIBG funds.

§ 31.502 Assurances and plan information.

(a) In its application for a Juvenile Accountability Incentive Block Grant (JAIBG), each State must provide assurances to the Office of Juvenile Justice and Delinquency Prevention (OJJDP), absent a waiver as provided in the JAIBG Program Guidance Manual, that:

(1) The State will subgrant at least 75% of the State's allocation of funds to eligible units of local government to implement authorized programs at the local level; and

(2) The State, and each unit of local government applying for a subgrant from the State, will expend not less than 45% of any grant provided to such State or unit of local government, other than funds set aside for administration, for program purposes 3–9 in § 31.500 (c) through (i) of this subpart, and will not spend less than 35% for program purposes 1, 2, and 10 in § 31.500 (a), (b), and (j) of this subpart, unless the State certifies to OJJDP, or the unit of local government certifies to the State, that the interests of public safety and juvenile crime control would be better served by expending the grant award for purposes set forth in the twelve program areas in a different ratio. Such certification shall provide information concerning the availability of existing structures or initiatives within the intended areas of expenditure (or the availability of alternative funding sources for those areas), and the reasons for the State or unit of local government's alternative use.

(3) The funds provided under this part shall be administered in compliance with the standards set forth in part 38 (Equal Treatment for Faith-based Organizations) of this chapter.

(b) Following award of JAIBG funds to a State by OJJDP, but prior to obligation of program funds by the State or of subgrant funds by a unit of local government for any authorized program purpose, a State administering JAIBG funds must provide to OJJDP information that demonstrates that the State, or a unit of local government that receives JAIBG funds, has established a coordinated enforcement

plan for reducing juvenile crime, developed by a Juvenile Crime Enforcement Coalition (JCEC).

(c) State coordinated enforcement plans must be developed by a Juvenile Crime Enforcement Coalition consisting of representatives of law enforcement and social service agencies involved in juvenile crime prevention. To assist in developing the State's coordinated enforcement plan, States may choose to utilize members of the State Advisory Group (SAG) established by the State's Chief Executive under section 223(a)(3) of Part B of the Juvenile Justice and Delinquency Prevention (JJDP) Act of 1974, as amended, codified at 42 U.S.C. 5633(a)(3), if appropriate membership exists, or use or establish another planning group that constitutes a coalition of law enforcement and social service agencies.

(d) When establishing a local Juvenile Crime Enforcement Coalition (JCEC), units of local government must include, unless impracticable, individuals representing:

(1) Police,
(2) Sheriff,
(3) Prosecutor,
(4) State or local probation services,
(5) Juvenile court,
(6) Schools,
(7) Business, and
(8) Religious affiliated, fraternal, nonprofit, or social service organizations involved in crime prevention.

(e) Units of local government may utilize members of Prevention Policy Boards established pursuant to section 505(b)(4) of Title V of the JJDP Act, codified at 42 U.S.C. 5784(b)(4), to meet the JCEC requirement, provided that each JCEC meets the membership requirements listed in paragraph (d) of this section.

[64 FR 19676, Apr. 21, 1999, as amended by Order No. 2703–2004, 69 FR 2838, Jan. 21, 2004]

§ 31.503 Notice of proposed use of funds.

The mechanism for a State to report on the proposed use of funds by the State or by a subgrantee unit of local government is by electronic submission of a ''Follow Up Information Form'' to be provided to each participating State. The purpose of this report is for the State to provide assurances to OJJDP that funds expended by the State and its subgrantee units of local government will be used for authorized program purpose areas. Although no actual program descriptions will be required, information about the distribution of funds among the authorized program purpose areas must be provided. Upon receipt and review of the ''Follow Up Information Form'' by OJJDP, States may obligate program funds retained for expenditure at the State level. Similarly, the State shall require that each recipient unit of local government submit its proposed use of non-administrative funds to the State prior to drawdown of subgrant funds to implement local programs and projects. Upon receipt and review of the local unit of government's proposed fund use, the State shall authorize the local unit of government to obligate local subgrant funds. The State shall electronically submit a copy of the local subgrant information to OJJDP, as provided in the award package, within 30 days of the date that the local unit of government is authorized to obligate program funds under its subgrant award.

PART 32—PUBLIC SAFETY OFFICERS' DEATH, DISABILITY, AND EDUCATIONAL ASSISTANCE BENEFIT CLAIMS

Sec.

32.0 Scope of part.

Subpart A—General Provisions

32.1 Scope of subpart.
32.2 Computation of time; filing.
32.3 Definitions.
32.4 Terms; construction, severability.
32.5 Evidence.
32.6 Payment and repayment.
32.7 Fees for representative services.
32.8 Exhaustion of administrative remedies.

Subpart B—Death Benefit Claims

32.11 Scope of subpart.
32.12 Time for filing claim.
32.13 Definitions.
32.14 PSOB Office determination.
32.15 Prerequisite certification.
32.16 Payment.
32.17 Request for Hearing Officer determination.

Subpart C—Disability Benefit Claims

32.21 Scope of subpart.
32.22 Time for filing claim.
32.23 Definitions.
32.24 PSOB Office determination.
32.25 Prerequisite certification.
32.26 Payment.
32.27 Motion for reconsideration of negative disability finding.
32.28 Reconsideration of negative disability finding.
32.29 Request for Hearing Officer determination.

Subpart D—Educational Assistance Benefit Claims

32.31 Scope of subpart.
32.32 Time for filing claim.
32.33 Definitions.
32.34 PSOB Office determination.
32.35 Disqualification.
32.36 Payment and repayment.
32.37 Request for Hearing Officer determination.

Subpart E—Hearing Officer Determinations

32.41 Scope of subpart.
32.42 Time for filing request for determination.
32.43 Appointment and assignment of Hearing Officers.
32.44 Hearing Officer determination.
32.45 Hearings.
32.46 Director appeal.

Subpart F—Director Appeals and Reviews

32.51 Scope of subpart.
32.52 Time for filing Director appeal.
32.53 Review.
32.54 Director determination.
32.55 Judicial appeal.

AUTHORITY: Public Safety Officers' Benefits Act of 1976 (42 U.S.C. ch. 46, subch. 12); Public Law 107–37; USA PATRIOT Act, sec. 611 (42 U.S.C. 3796c–1).

SOURCE: 71 FR 46037, Aug. 10, 2006, unless otherwise noted.

§ 32.0 Scope of part.

This part implements the Act.

Subpart A—General Provisions

§ 32.1 Scope of subpart.

This subpart contains provisions generally applicable to this part.

§ 32.2 Computation of time; filing.

(a) In computing any period of time prescribed or allowed, the day of the act, event, or default from which the designated period of time begins to run shall not be included. The last day of the period so computed shall be included, unless it is a Saturday, a Sunday, or a federal legal holiday, or, when the act to be done is a filing with the PSOB Office, a day on which weather or other conditions have caused that Office to be closed or inaccessible, in which event the period runs until the end of the next day that is not one of the aforedescribed days.

(b) A filing is deemed filed with the PSOB Office, a Hearing Officer, the Director, or any other OJP office, -officer, -employee, or -agent, only on the day that it actually is received at the office of the same. When a filing is prescribed to be filed with more than one of the foregoing, it shall be deemed filed as of the day the last such one so receives it.

(c) Notice is served by the PSOB Office upon an individual on the day that it is—

(1) Mailed, by U.S. mail, addressed to the individual (or to his representative) at his (or his representative's) last address known to such Office;

(2) Delivered to a courier or other delivery service, addressed to the individual (or to his representative) at his (or his representative's) last address known to such Office; or

(3) Sent by electronic means such as telefacsimile or electronic mail, addressed to the individual (or to his representative) at his (or his representative's) last telefacsimile number or electronic-mail address, or other electronic address, known to such Office.

(d) In the event of withdrawal or abandonment of a filing, the time periods prescribed for the filing thereof shall not be tolled, unless, for good cause shown, the Director grants a waiver.

(e) No claim may be filed (or approved) under the Act, at 42 U.S.C. 3796(a) or (b), with respect to an injury, if a claim under the Act, at 42 U.S.C. 3796c–1 or Public Law 107–37, has been approved, with respect to the same injury.

(f) No claim may be filed (or approved) under the Act, at 42 U.S.C. 3796c–1 or Public Law 107–37, with respect to an injury, if a claim under the

Act, at 42 U.S.C. 3796(a) or (b), has been approved, with respect to the same injury.

§ 32.3 Definitions.

Act means the Public Safety Officers' Benefits Act of 1976 (generally codified at 42 U.S.C. 3796, *et seq.*; part L of title I of the Omnibus Crime Control and Safe Streets Act of 1968) (including (uncodified) section 5 thereof (rule of construction and severability)), as applicable according to its effective date and those of its various amendments (*e.g.*, Sept. 29, 1976 (deaths of State and local law enforcement officers and firefighters); Jan. 1, 1978 (educational assistance); Oct. 1, 1984 (deaths of federal law enforcement officers and firefighters); Oct. 18, 1986 (deaths of rescue squad and ambulance crew members); Nov. 29, 1990 (disabilities); Oct. 30, 2000 (disaster relief workers); Sept. 11, 2001 (chaplains and insurance beneficiaries); Dec. 15, 2003 (certain heart attacks and strokes); and Apr. 5, 2006 (designated beneficiaries)); and also includes Public Law 107–37 and sections 611 and 612 of the USA PATRIOT Act (all three of which relate to payment of benefits, described under subpart 1 of such part L, in connection with terrorist attacks).

Adopted child—An individual is an adopted child of a public safety officer only if—

(1) The individual is legally adopted by the officer; or

(2) As of the injury date, and not being a stepchild, the individual was—

(i) Known by the officer not to be his biological first-generation offspring; and

(ii) After the officer obtained such knowledge, in a parent-child relationship with him.

Authorized commuting means travel by a public safety officer—

(1) In the course of actually responding to a fire, rescue, or police emergency; or

(2) Between home and work (at a situs authorized or required by the public agency he serves)—

(i) Using a vehicle provided by such agency, pursuant to a requirement or authorization by such agency that he use the same for commuting; or

(ii) Using a vehicle not provided by such agency, pursuant to a requirement by such agency that he use the same for work.

BJA means the Bureau of Justice Assistance, OJP.

Cause—A death, injury, or disability is caused by intentional misconduct if—

(1) The misconduct is a substantial factor in bringing it about; and

(2) It is a reasonably foreseeable result of the misconduct.

Chaplain means a clergyman, or other individual trained in pastoral counseling, who meets the definition provided in the Act, at 42 U.S.C. 3796b(2).

Child of a public safety officer means an individual—

(1) Who—

(i) Meets the definition provided in the Act, at 42 U.S.C. 3796b(3), in any claim—

(A) Arising from the public safety officer's death, in which the death was simultaneous (or practically simultaneous) with the injury; or

(B) Filed after the public safety officer's death, in which the claimant is the officer's—

(*1*) Biological child, born after the injury date;

(*2*) Adopted child, adopted by him after the injury date; or

(*3*) Stepchild, pursuant to a marriage entered into by him after the injury date; or

(ii) In any claim not described in paragraph (1)(i) of this definition—

(A) Meets (as of the injury date) the definition provided in the Act, at 42 U.S.C. 3796b(3), *mutatis mutandis* (*i.e.*, with ''deceased'' and ''death'' being substituted, respectively, by ''deceased or disabled'' and ''injury''); or

(B) Having been born after the injury date, is described in paragraph (1)(i)(B)(*1*), (*2*), or (*3*) of this definition; and

(2) With respect to whom the public safety officer's parental rights have not been terminated, as of the injury date.

Convincing evidence means clear and convincing evidence.

Crime means an act or omission punishable as a criminal misdemeanor or felony.

Criminal laws means that body of law that declares what acts or omissions are crimes and prescribes the punishment that may be imposed for the same.

Department or agency—An entity is a department or agency within the meaning of the Act, at 42 U.S.C. 3796b(8), and this part, only if the entity is—

(1) A court;

(2) An agency described in the Act, at 42 U.S.C. 3796b(9)(B) or (C); or

(3) Otherwise a public entity—

(i) That is legally an express part of the internal organizational structure of the relevant government;

(ii) That has no legal existence independent of such government; and

(iii) Whose obligations, acts, omissions, officers, and employees are legally those of such government.

Determination means the approval or denial of a claim (including an affirmance or reversal pursuant to a motion for reconsideration under § 32.27), or the determination described in the Act, at 42 U.S.C. 3796(c).

Director means the Director of BJA.

Direct and proximate result of an injury—Except as may be provided in the Act, at 42 U.S.C. 3796(k), a death or disability results directly and proximately from an injury if the injury is a substantial factor in bringing it about.

Disaster relief activity means activity or an action encompassed within the duties described in the Act, at 42 U.S.C. 3796b(9)(B) or (C).

Disaster relief worker means any individual who meets the definition provided in the Act, at 42 U.S.C. 3796b(9)(B) or (C).

Disturbance includes any significant and negative alteration, any significant negative deviation from the objectively normal, or any significant deterioration.

Divorce means a legally-valid divorce from the bond of wedlock (*i.e.*, the bond of marriage), except that, notwithstanding any other provision of law, a spouse (or purported spouse) of a living individual shall be considered to be divorced from that individual within the meaning of this definition if, subsequent to his marriage (or purported marriage) to that individual, the spouse (or purported spouse)—

(1) Holds himself out as being divorced from, or not being married to, the individual;

(2) Holds himself out as being married to another individual; or

(3) Was a party to a ceremony purported by the parties thereto to be a marriage between the spouse (or purported spouse) and another individual.

Drugs or other substances means controlled substances within the meaning of the drug control and enforcement laws, at 21 U.S.C. 802(6).

Educational/academic institution means an institution whose primary purpose is educational or academic learning.

Eligible payee means—

(1) A beneficiary described in the Act, at 42 U.S.C. 3796(a), with respect to a claim under subpart B of this part; or

(2) A beneficiary described in the Act, at 42 U.S.C. 3796(b), with respect to a claim under subpart C of this part.

Emergency medical services means—

(1) Provision of first-response emergency medical care (other than in a permanent medical-care facility); or

(2) Transportation of persons in medical distress (or under emergency conditions) to medical-care facilities.

Employed by a public agency—A public safety officer is employed, within the meaning of the Act, at 42 U.S.C. 3796c–1 or Public Law 107–37, by a public agency, when he—

(1) Is employed by the agency in a civilian capacity; and

(2) Is—

(i) Serving the agency in an official capacity (with respect to officers of any kind but disaster relief workers); or

(ii) Performing official duties as described in the Act, at 42 U.S.C. 3796b(9)(B) or (C) (with respect to disaster relief workers).

Employee does not include—

(1) Any independent contractor; or

(2) Any individual who is not eligible to receive death or disability benefits from the purported employer on the same basis as a regular employee of such employer would.

Filing means any claim, request, motion, election, petition, or appeal, and

any item or matter (*e.g.*, evidence, certifications, authorizations, waivers, legal arguments, or lists) that is, or may be, filed with the PSOB Office.

Fire protection means—

(1) Suppression of fire;

(2) Hazardous-materials emergency response; or

(3) Emergency medical services or rescue activity of the kind performed by firefighters.

Fire, rescue, or police emergency includes disaster-relief emergency.

Firefighter means an individual who—

(1) Is trained in—

(i) Suppression of fire; or

(ii) Hazardous-materials emergency response; and

(2) Has the legal authority and -responsibility to engage in the suppression of fire, as—

(i) An employee of the public agency he serves, which legally recognizes him to have such (or, at a minimum, does not deny (or has not denied) him to have such); or

(ii) An individual otherwise included within the definition provided in the Act, at 42 U.S.C. 3796b(4).

Functionally within or -part of—No individual shall be understood to be functionally within or -part of a public agency solely by virtue of an independent contractor relationship.

Gross negligence means great, heedless, wanton, indifferent, or reckless departure from ordinary care, prudence, diligence, or safe practice—

(1) In the presence of serious risks that are known or obvious;

(2) Under circumstances where it is highly likely that serious harm will follow; or

(3) In situations where a high degree of danger is apparent.

Hazardous-materials emergency response means emergency response to the threatened or actual release of hazardous materials, where life, property, or the environment is at significant risk.

Heart attack means myocardial infarction or sudden cardiac arrest.

Illegitimate child—An individual is an illegitimate child of a public safety officer only if he is a natural child of the officer, and the officer is not married to the other biological parent at (or at any time after) the time of his conception.

Incapable of self-support because of physical or mental disability—An individual is incapable of self-support because of physical or mental disability if he is under a disability within the meaning of the Social Security Act, at 42 U.S.C. 423(d)(1)(A), applicable *mutatis mutandis*.

Independent contractor includes any volunteer, servant, employee, contractor, or agent, of an independent contractor.

Injury means a traumatic physical wound (or a traumatized physical condition of the body) caused by external force (such as bullets, explosives, sharp instruments, blunt objects, or physical blows), chemicals, electricity, climatic conditions, infectious disease, radiation, virii, or bacteria, but does not include any occupational disease, or any condition of the body caused or occasioned by stress or strain.

Injury date means the time of the line of duty injury that—

(1) Directly and proximately results in the public safety officer's death, with respect to a claim under—

(i) Subpart B of this part; or

(ii) Subpart D of this part, by virtue of his death; or

(2) Directly (or directly and proximately) results in the public safety officer's total and permanent disability, with respect to a claim under—

(i) Subpart C of this part; or

(ii) Subpart D of this part, by virtue of his disability.

Instrumentality means entity, and does not include any individual, except that no entity shall be considered an instrumentality within the meaning of the Act, at 42 U.S.C. 3796b(8), or this part, unless, as of the injury date,

(1) The entity—

(i) Is legally established, -recognized, or -organized, such that it has legal existence; and

(ii) Is so organized and controlled, and its affairs so conducted, that it operates and acts solely and exclusively as a functional part of the relevant government, which legally recognizes it as such (or, at a minimum, does not deny (or has not denied) it to be such); and

(2) The entity's—

(i) Functions and duties are solely and exclusively of a public character;

(ii) Services are provided generally to the public as such government would provide if acting directly through its public employees (*i.e.*, they are provided without regard to any particular relationship (such as a subscription) a member of the public may have with such entity); and

(iii) Acts and omissions are, and are recognized by such government as (or, at a minimum, not denied by such government to be), legally—

(A) Those of such government, for purposes of sovereign immunity; or

(B) The responsibility of such government, for purposes of tort liability.

Intention—A death, injury, or disability is brought about by a public safety officer's intention if—

(1) An intentional action or activity of his is a substantial factor in bringing it about; and

(2) It is a reasonably foreseeable result of the intentional action or activity.

Intentional action or activity means activity or action (other than line of duty activity or action), including behavior, that is—

(1) A result of conscious volition, or otherwise voluntary;

(2) Not a result of legal insanity or of impulse that is legally and objectively uncontrollable; and

(3) Not performed under legal duress or legal coercion of the will.

Intentional misconduct—Except with respect to voluntary intoxication at the time of death or catastrophic injury, a public safety officer's action or activity is intentional misconduct if—

(1) As of the date it is performed,

(i) Such action or activity—

(A) Is in violation of, or otherwise prohibited by, any statute, rule, regulation, condition of employment or service, official mutual-aid agreement, or other law; or

(B) Is contrary to the ordinary, usual, or customary practice of similarly-situated officers within the public agency in which he serves; and

(ii) He knows, or reasonably should know, that it is so in violation, prohibited, or contrary; and

(2) Such action or activity—

(i) Is intentional; and

(ii) Is—

(A) Performed without reasonable excuse; and

(B) Objectively unjustified.

Involvement—An individual is involved in crime and juvenile delinquency control or reduction, or enforcement of the criminal laws (including juvenile delinquency), only if he is an officer of a public agency and, in that capacity, has legal authority and -responsibility to arrest, apprehend, prosecute, adjudicate, correct or detain (in a prison or other detention or confinement facility), or supervise (as a parole or probation officer), persons who are alleged or found to have violated the criminal laws, and is recognized by such agency, or the relevant government (or, at a minimum, not denied by such agency, or the relevant government), to have such authority and responsibility.

Itemized description of representative services provided—A description of representative services provided is itemized only when it includes—

(1) The beginning and end dates of the provision of the services;

(2) An itemization of the services provided and the amount of time spent in providing them; and

(3) An itemization of the expenses incurred in connection with the services provided for which reimbursement is sought.

Kinds of public safety officers—The following are the different kinds of public safety officers:

(1) Law enforcement officers;

(2) Firefighters;

(3) Chaplains;

(4) Members of rescue squads or ambulance crews; and

(5) Disaster relief workers.

Law enforcement means enforcement of the criminal laws, including—

(1) Control or reduction of crime or of juvenile delinquency;

(2) Prosecution or adjudication of individuals who are alleged or found to have violated such laws;

(3) Corrections or detention (in a prison or other detention or confinement facility) of individuals who are alleged or found to have violated such laws; and

(4) Supervision of individuals on parole or probation for having violated such laws.

Line of duty activity or action—Activity or an action is performed in the line of duty, in the case of a public safety officer who is—

(1) A law enforcement officer, a firefighter, or a member of a rescue squad or ambulance crew—

(i) Whose primary function (as applicable) is law enforcement, fire protection, rescue activity, or the provision of emergency medical services, only if, not being described in the Act, at 42 U.S.C. 3796a(1), and not being a frolic or detour, it is activity or an action that he is obligated or authorized by statute, rule, regulation, condition of employment or service, official mutual-aid agreement, or other law, to perform (including any social, ceremonial, or athletic functions (or any training programs) to which he is assigned, or for which he is compensated), under the auspices of the public agency he serves, and such agency (or the relevant government) legally recognizes that activity or action to be so obligated or authorized (or, at a minimum, does not deny (or has not denied) it to be such); or

(ii) Whose primary function is not law enforcement, fire protection, rescue activity, or the provision of emergency medical services, only if, not being described in the Act, at 42 U.S.C. 3796a(1), and not being a frolic or detour—

(A) It is activity or an action that he is obligated or authorized by statute, rule, regulation, condition of employment or service, official mutual-aid agreement, or other law, to perform, under the auspices of the public agency he serves, and such agency (or the relevant government) legally recognizes that activity or action to be so obligated or authorized (or, at a minimum, does not deny (or has not denied) it to be such); and

(B) It is performed (as applicable) in the course of law enforcement, providing fire protection, engaging in rescue activity, providing emergency medical services, or training for one of the foregoing, and such agency (or the relevant government) legally recognizes it as such (or, at a minimum, does not deny (or has not denied) it to be such);

(2) A disaster relief worker, only if, not being described in the Act, at 42 U.S.C. 3796a(1), and not being a frolic or detour, it is disaster relief activity, and the agency he serves (or the relevant government), being described in the Act, at 42 U.S.C. 3796b(9)(B) or (C), legally recognizes it as such (or, at a minimum, does not deny (or has not denied) it to be such); or

(3) A chaplain, only if, not being described in the Act, at 42 U.S.C. 3796a(1), and not being a frolic or detour—

(i) It is activity or an action that he is obligated or authorized by statute, rule, regulation, condition of employment or service, official mutual-aid agreement, or other law, to perform, under the auspices of the public agency he serves, and such agency (or the relevant government) legally recognizes it as such (or, at a minimum, does not deny (or has not denied) it to be such); and

(ii) It is performed in the course of responding to a fire, rescue, or police emergency, and such agency (or the relevant government) legally recognizes it as such (or, at a minimum, does not deny (or has not denied) it to be such).

Line of duty injury—An injury is sustained in the line of duty only if—

(1) It is sustained in the course of—

(i) Performance of line of duty activity or a line of duty action; or

(ii) Authorized commuting; or

(2) Convincing evidence demonstrates that such injury resulted from the injured party's status as a public safety officer.

Mental faculties means brain function.

Natural child—An individual is a natural child of a public safety officer only if he is a biological child of the officer, and the officer is alive at the time of his birth.

Occupational disease means a disease that routinely constitutes a special hazard in, or is commonly regarded as a concomitant of, an individual's occupation.

Official capacity—An individual serves a public agency in an official capacity only if—

(1) He is officially authorized, -recognized, or -designated (by such agency)

as functionally within or -part of it; and

(2) His acts and omissions, while so serving, are legally those of such agency, which legally recognizes them as such (or, at a minimum, does not deny (or has not denied) them to be such).

Official duties means duties that are officially authorized, -recognized, or -designated by an employing entity, such that the performance of those duties is legally the action of such entity, which legally recognizes it as such (or, at a minimum, does not deny (or has not denied) it to be such).

Officially recognized or designated member of a department or agency means a member of a department or agency, or of an instrumentality, of a government described in the Act, at 42 U.S.C. 3796b(8), who is officially recognized (or officially designated) as such a member by the same.

Officially recognized or designated public employee of a department or agency means a public employee of a department or agency who is officially recognized (or officially designated) as a public safety officer, by the same.

Officially recognized or designated public employee member of a squad or crew means a public employee member of a squad or crew who is officially recognized (or officially designated) as such a public employee member, by the public agency under whose auspices the squad or crew operates.

OJP means the Office of Justice Programs, U.S. Department of Justice.

Parent means a father or a mother.

Parent-child relationship means a relationship between a public safety officer and another individual, in which the officer has the role of parent (other than biological or legally-adoptive), as shown by convincing evidence.

Performance of duties in a grossly negligent manner at the time of death or catastrophic injury means gross negligence, as of or near the injury date, in the course of authorized commuting or performance of line of duty activity or a line of duty action, where such negligence is a substantial contributing factor in bringing such death or injury about.

Posthumous child—An individual is a posthumous child of a public safety officer only if he is a biological child of the officer, and the officer is—

(1) Alive at the time of his conception; and

(2) Not alive at the time of his birth.

PSOB determining official means, as applicable, any of the following:

(1) The PSOB Office;

(2) The Hearing Officer; or

(3) The Director.

PSOB Office means the unit of BJA that directly administers the Public Safety Officers' Benefits program, except that, with respect to the making of any finding, determination, affirmance, reversal, assignment, authorization, decision, judgment, waiver, or other ruling, it means such unit, acting with the concurrence of OJP's General Counsel.

Public employee means—

(1) An employee of a government described in the Act, at 42 U.S.C. 3796b(8), (or of a department or agency thereof) and whose acts and omissions while so employed are legally those of such government, which legally recognizes them as such (or, at a minimum, does not deny (or has not denied) them to be such); or

(2) An employee of an instrumentality of a government described in the Act, at 42 U.S.C. 3796b(8), who is eligible to receive death or disability benefits from such government on the same basis as an employee of that government (within the meaning of paragraph (1) of this definition) would.

Public employee member of a squad or crew means a member of a squad or crew who is a public employee under the auspices of whose public agency employer the squad or crew operates.

Public employee of a department or agency means a public employee whose public agency employer is the department or agency.

Qualified beneficiary—An individual is a qualified beneficiary under the Act, at 42 U.S.C. 3796c–1 or Public Law 107–37, only if he is an eligible payee—

(1) Who qualifies as a beneficiary pursuant to a determination that—

(i) The requirements of the Act, at 42 U.S.C. 3796(a) or (b) (excluding the limitations relating to appropriations), as applicable, have been met; and

(ii) The provisions of this part, as applicable, relating to payees otherwise have been met; and

(2) Whose actions were not a substantial contributing factor to the death of the public safety officer (with respect to a claim under subpart B of this part).

Representative services include expenses incurred in connection with such services.

Rescue activity means search or rescue assistance in locating or extracting from danger persons lost, missing, or in imminent danger of serious bodily harm.

Rescue squad or ambulance crew means a squad or crew whose members are rescue workers, ambulance drivers, paramedics, health-care responders, emergency medical technicians, or other similar workers, who—

(1) Are trained in rescue activity or the provision of emergency medical services; and

(2) As such members, have the legal authority and -responsibility to—

(i) Engage in rescue activity; or

(ii) Provide emergency medical services.

Spouse means an individual's lawful husband, -wife, -widower, or -widow (*i.e.*, with whom the individual lawfully entered into marriage), and includes a spouse living apart from the individual, other than pursuant to divorce, except that, notwithstanding any other provision of law—

(1) For an individual purporting to be a spouse on the basis of a common-law marriage (or a putative marriage) to be considered a spouse within the meaning of this definition, it is necessary (but not sufficient) for the jurisdiction of domicile of the parties to recognize such individual as the lawful spouse of the other; and

(2) In deciding who may be the spouse of a public safety officer—

(i) The relevant jurisdiction of domicile is the officer's (as of the injury date); and

(ii) With respect to a claim under subpart B of this part, the relevant date is that of the officer's death.

Stepchild—An individual is a stepchild of a public safety officer only if the individual is the legally-adoptive or biological first-generation offspring of a public safety officer's current, deceased, or former spouse, which offspring (not having been legally adopted by the officer)—

(1) Was conceived before the marriage of the officer and the spouse; and

(2) As of the injury date—

(i) Was known by the officer not to be his biological first-generation offspring; and

(ii) After the officer obtained such knowledge—

(A) Received over half of his support from the officer;

(B) Had as his principal place of abode the home of the officer and was a member of the officer's household; or

(C) Was in a parent-child relationship with the officer.

Stress or strain includes physical stress or strain, mental stress or strain, post-traumatic stress disorder, and depression.

Stroke means cerebral vascular accident.

Student means an individual who meets the definition provided in the Act, at 42 U.S.C. 3796b(3)(ii), with respect to an educational/academic institution.

Substantial contributing factor—A factor substantially contributes to a death, injury, or disability, if the factor—

(1) Contributed to the death, injury, or disability to a significant degree; or

(2) Is a substantial factor in bringing the death, injury, or disability about.

Substantial factor—A factor substantially brings about a death, injury, disability, heart attack, or stroke if—

(1) The factor alone was sufficient to have caused the death, injury, disability, heart attack, or stroke; or

(2) No other factor (or combination of factors) contributed to the death, injury, disability, heart attack, or stroke to so great a degree as it did.

Suppression of fire means extinguishment, physical prevention, or containment of fire, including on-site hazard evaluation.

Terrorist attack—An event or act is a terrorist attack within the meaning of the Act, at 42 U.S.C. 3796c–1(a), only if the Attorney General determines that—

(1) There is a reasonable indication that the event or act was (or would be

or would have been, with respect to *a priori* prevention or investigation efforts) an act of domestic or international terrorism within the meaning of the criminal terrorism laws, at 18 U.S.C. 2331; and

(2) The event or act (or the circumstances of death or injury) was of such extraordinary or cataclysmic character as to make particularized factual findings impossible, impractical, unnecessary, or unduly burdensome.

Voluntary intoxication at the time of death or catastrophic injury means the following:

(1) With respect to alcohol,

(i) In any claim arising from a public safety officer's death in which the death was simultaneous (or practically simultaneous) with the injury, it means intoxication as defined in the Act, at 42 U.S.C. 3796b(5), unless convincing evidence demonstrates that the officer did not introduce the alcohol into his body intentionally; and

(ii) In any claim not described in paragraph (1)(i) of this definition, unless convincing evidence demonstrates that the officer did not introduce the alcohol into his body intentionally, it means intoxication—

(A) As defined in the Act, at 42 U.S.C. 3796b(5), *mutatis mutandis* (*i.e.*, with ''post-mortem'' (each place it occurs) and ''death'' being substituted, respectively, by ''post-injury'' and ''injury''); and

(B) As of the injury date; and

(2) With respect to drugs or other substances, it means a disturbance of mental or physical faculties resulting from their introduction into the body of a public safety officer, as evidenced by the presence therein, as of the injury date—

(i) Of any controlled substance included on Schedule I of the drug control and enforcement laws (see 21 U.S.C. 812(a)), or any controlled substance included on Schedule II, III, IV, or V of such laws (see 21 U.S.C. 812(a)) and with respect to which there is no therapeutic range or maximum recommended dosage, unless convincing evidence demonstrates that such introduction was not a culpable act of the officer's under the criminal laws; or

(ii) Of any controlled substance included on Schedule II, III, IV, or V of the drug control and enforcement laws (see 21 U.S.C. 812(a)) and with respect to which there is a therapeutic range or maximum recommended dosage—

(A) At levels above or in excess of such range or dosage, unless convincing evidence demonstrates that such introduction was not a culpable act of the officer's under the criminal laws; or

(B) At levels at, below, or within such range or dosage, unless convincing evidence demonstrates that—

(*1*) Such introduction was not a culpable act of the officer's under the criminal laws; or

(*2*) The officer was not acting in an intoxicated manner immediately prior to the injury date.

§ 32.4 Terms; construction, severability.

(a) The first three provisions of 1 U.S.C. 1 (rules of construction) shall apply.

(b) If benefits are denied to any individual pursuant to the Act, at 42 U.S.C. 3796a(4), or otherwise because his actions were a substantial contributing factor to the death of the public safety officer, such individual shall be presumed irrebuttably, for all purposes, not to have survived the officer.

(c) Any provision of this part held to be invalid or unenforceable by its terms, or as applied to any person or circumstance, shall be construed so as to give it the maximum effect permitted by law, unless such holding shall be one of utter invalidity or unenforceability, in which event such provision shall be deemed severable herefrom and shall not affect the remainder hereof or the application of such provision to other persons not similarly situated or to other, dissimilar circumstances.

§ 32.5 Evidence.

(a) Except as otherwise may be expressly provided in the Act or this part, a claimant has the burden of persuasion as to all material issues of fact, and by the standard of proof of ''more likely than not.''

(b) Except as otherwise may be expressly provided in this part, the PSOB

determining official may, at his discretion, consider (but shall not be bound by) the factual findings of a public agency.

(c) Rules 401 (relevant evidence), 402 (admissibility), 602 to 604 (witnesses), 701 to 704 (testimony), 901 to 903 (authentication), and 1001 to 1008 (contents of writings, records, and photographs) of the Federal Rules of Evidence shall apply to all filings, hearings, and other proceedings or matters.

(d) In determining a claim, the PSOB determining official may, at his discretion, draw an adverse inference if, without reasonable justification or excuse—

(1) A claimant fails or refuses to file with the PSOB Office—

(i) Such material- or relevant evidence or -information within his possession, control, or ken as may reasonably be requested from time to time by such official; or

(ii) Such authorizations or waivers as may reasonably be requested from time to time by such official to enable him (or to assist in enabling him) to obtain access to material- or relevant evidence or -information of a medical, personnel, financial, or other confidential nature; or

(2) A claimant under subpart C of this part fails or refuses to appear in person—

(i) At his hearing under subpart E of this part (if there be such a hearing); or

(ii) Before such official (or otherwise permit such official personally to observe his condition), at a time and location reasonably convenient to both, as may reasonably be requested by such official.

(e) In determining a claim, the PSOB determining official may, at his discretion, draw an inference of voluntary intoxication at the time of death or catastrophic injury if, without reasonable justification or excuse, appropriate toxicologic analysis (including autopsy, in the event of death) is not performed, and/or the results thereof are not filed with the PSOB Office, where there is credible evidence suggesting that intoxication may have been a factor in the death or injury, or that the public safety officer—

(1) As of or near the injury date, was—

(i) A consumer of alcohol)—

(A) In amounts likely to produce a blood-alcohol level of .10 per centum or greater in individuals similar to the officer in weight and sex; or

(B) In any amount, after ever having been treated at an inpatient facility for alcoholism;

(ii) A consumer of controlled substances included on Schedule I of the drug control and enforcement laws (see 21 U.S.C. 812(a)); or

(iii) An abuser of controlled substances included on Schedule II, III, IV, or V of the drug control and enforcement laws (see 21 U.S.C. 812(a)); or

(2) Immediately prior to the injury date, was under the influence of alcohol or drugs or other substances or otherwise acting in an intoxicated manner.

(f) In determining a claim under the Act, at 42 U.S.C. 3796c–1 or Public Law 107–37, the certification described therein shall constitute *prima facie* evidence—

(1) Of the public agency's acknowledgment that the public safety officer, as of the injury date, was (as applicable)—

(i) A public safety officer of the kind described in the certification;

(ii) Employed by the agency;

(iii) One of the following:

(A) With respect to a law enforcement officer, an officer of the agency;

(B) With respect to a firefighter,

(*1*) An officially recognized or designated member of the agency (if it is a legally organized volunteer fire department); or

(*2*) An employee of the agency;

(C) With respect to a chaplain,

(*1*) An officially recognized or designated member of the agency (if it is a legally organized police or volunteer fire department); or

(*2*) An officially recognized or designated public employee of the agency (if it is a legally organized police or fire department);

(D) With respect to a member of a rescue squad or ambulance crew, an officially recognized or designated public employee member of one of the agency's rescue squads or ambulance crews; or

(E) With respect to a disaster relief worker, an employee of the agency (if

it is described in the Act, at 42 U.S.C. 3796b(9)(B) or (C)); and

(iv) Killed (with respect to a claim under subpart B of this part), or totally and permanently disabled (with respect to a claim under subpart C of this part), as a direct and proximate result of a line of duty injury; and

(2) That there are no eligible payees other than those identified in the certification.

§ 32.6 Payment and repayment.

(a) No payment shall be made to (or on behalf of) more than one individual, on the basis of being a particular public safety officer's spouse.

(b) No payment shall be made, save—

(1) To (or on behalf of) a living payee; and

(2) Pursuant to—

(i) A claim filed by (or on behalf of) such payee; and

(ii) Except as provided in the Act, at 42 U.S.C. 3796(c), approval of such claim.

(c) Any amounts that would be paid but for the provisions of paragraph (b) of this section shall be retained by the United States and not paid.

(d) With respect to the amount paid to a payee (or on his behalf) pursuant to a claim, the payee shall repay the following, unless, for good cause shown, the Director grants a full or partial waiver pursuant to the Act, at 42 U.S.C. 3796(m):

(1) The entire amount, if approval of the claim was based, in whole or in material part, on the payee's (or any other person's or entity's) fraud, concealment or withholding of evidence or information, false or inaccurate statements, mistake, wrongdoing, or deception; or

(2) The entire amount subject to divestment, if the payee's entitlement to such payment is divested, in whole or in part, such as by the subsequent discovery of individuals entitled to make equal or superior claims.

(e) At the discretion of the Director, repayment of amounts owing or collectable under the Act or this part may, as applicable, be executed through setoffs against future payments on financial claims under subpart D of this part.

§ 32.7 Fees for representative services.

(a) A person seeking to receive any amount from (or with respect to) a claimant for representative services provided in connection with any claim may petition the PSOB Office for authorization under this section. Such petition shall include—

(1) An itemized description of the services;

(2) The total amount sought to be received, from any source, as consideration for the services;

(3) An itemized description of any representative or other services provided to (or on behalf of) the claimant in connection with other claims or causes of action, unrelated to the Act, before any public agency or non-public entity (including any insurer), arising from the public safety officer's death, disability, or injury;

(4) The total amount requested, charged, received, or sought to be received, from any source, as consideration for the services described in paragraph (a)(3) of this section;

(5) A statement of whether the petitioner has legal training or is licensed to practice law, and a description of any special qualifications possessed by the petitioner (other than legal training or a license to practice law) that increased the value of his services to (or on behalf of) the claimant;

(6) A certification that the claimant was provided, simultaneously with the filing of the petition, with—

(i) A copy of the petition; and

(ii) A letter advising the claimant that he could file his comments on the petition, if any, with the PSOB Office, within thirty-three days of the date of that letter; and

(7) A copy of the letter described in paragraph (a)(6)(ii) of this section.

(b) Unless, for good cause shown, the Director extends the time for filing, no petition under paragraph (a) of this section shall be considered if the petition is filed with the PSOB Office later than one year after the date of the final agency determination of the claim.

(c) Subject to paragraph (d) of this section, an authorization under paragraph (a) of this section shall be based on consideration of the following factors:

(1) The nature of the services provided by the petitioner;

(2) The complexity of the claim;

(3) The level of skill and competence required to provide the petitioner's services;

(4) The amount of time spent on the claim by the petitioner;

(5) The results achieved as a function of the petitioner's services;

(6) The level of administrative or judicial review to which the claim was pursued and the point at which the petitioner entered the proceedings;

(7) The ordinary, usual, or customary fee charged by other persons (and by the petitioner) for services of a similar nature; and

(8) The amount authorized by the PSOB Office in similar cases.

(d) No amount shall be authorized under paragraph (a) of this section for—

(1) Any stipulated-, percentage-, or contingency fee;

(2) Services at a rate in excess of that specified in 5 U.S.C. 504(b)(1)(A)(ii) (Equal Access to Justice Act); or

(3) Services provided in connection with—

(i) Obtaining or providing evidence or information previously obtained by the PSOB determining official;

(ii) Preparing the petition; or

(iii) Explaining or delivering an approved claim to the claimant.

(e) Upon a petitioner's failure (without reasonable justification or excuse) to pursue in timely fashion his filed petition under paragraph (a) of this section, the Director may, at his discretion, deem the same to be abandoned, as though never filed. Not less than thirty-three days prior thereto, the PSOB Office shall serve the petitioner and the claimant with notice of the Director's intention to exercise such discretion.

(f) Upon its authorizing or not authorizing the payment of any amount under paragraph (a) of this section, the PSOB Office shall serve notice of the same upon the claimant and the petitioner. Such notice shall specify the amount, if any, the petitioner is authorized to charge the claimant and the basis of the authorization.

(g) No agreement for representative services in connection with a claim shall be valid if the agreement provides for any consideration other than under this section. A person's receipt of consideration for such services other than under this section may, among other things, be the subject of referral by BJA to appropriate professional, administrative, disciplinary, or other legal authorities.

§ 32.8 Exhaustion of administrative remedies.

No determination or negative disability finding that, at the time made, may be subject to a request for a Hearing Officer determination, a motion for reconsideration, or a Director appeal, shall be considered a final agency determination for purposes of judicial review, unless all administrative remedies have been exhausted.

Subpart B—Death Benefit Claims

§ 32.11 Scope of subpart.

Consistent with § 32.1, this subpart contains provisions applicable to claims made under the Act—

(a) At 42 U.S.C. 3796(a); or

(b) At 42 U.S.C. 3796c–1 or Public Law 107–37, with respect to a public safety officer's death.

§ 32.12 Time for filing claim.

(a) Unless, for good cause shown, the Director extends the time for filing, no claim shall be considered if it is filed with the PSOB Office after the later of—

(1) Three years after the public safety officer's death; or

(2) One year after the receipt or denial of any benefits described in § 32.15(a)(1)(i) (or the receipt of the certification described in § 32.15(a)(1)(ii)).

(b) A claimant may file with his claim such supporting evidence and legal arguments as he may wish to provide.

§ 32.13 Definitions.

Adoptive parent of a public safety officer means any individual who (not being a step-parent), as of the injury date, was the legally-adoptive parent of the public safety officer, or otherwise was in a child-parent relationship with him.

Beneficiary of a life insurance policy of a public safety officer—An individual (living or deceased on the date of death of the public safety officer) is designated as beneficiary of a life insurance policy of such officer as of such date, only if the designation is, as of such date, legal and valid (as a designation of beneficiary of a life insurance policy) and unrevoked (by such officer or by operation of law), except that—

(1) Any designation of an individual (including any designation of the biological or adoptive offspring of such individual) made in contemplation of such individual's marriage (or purported marriage) to such officer shall be considered to be revoked by such officer as of such date of death if the marriage (or purported marriage)—not having taken place as of such date of death—did not take place when scheduled, unless preponderant evidence demonstrates that—

(i) The alteration in schedule was for reasons other than personal differences between the officer and the individual; or

(ii) No such revocation was intended by the officer; and

(2) Any designation of a spouse (or purported spouse) made in contemplation of or during such spouse's (or purported spouse's) marriage (or purported marriage) to such officer (including any designation of the biological or adoptive offspring of such individual) shall be considered to be revoked by such officer as of such date of death if the spouse (or purported spouse) is divorced from such officer after the date of designation and before such date of death, unless preponderant evidence demonstrates that no such revocation was intended by the officer.

Beneficiary under the Act, at 42 U.S.C. 3796(a)(4)(A)—An individual (living or deceased on the date of death of the public safety officer) is designated, by such officer (and as of such date), as beneficiary under the Act, at 42 U.S.C. 3796(a)(4)(A), only if the designation is, as of such date, legal and valid and unrevoked (by such officer or by operation of law), except that—

(1) Any designation of an individual (including any designation of the biological or adoptive offspring of such individual) made in contemplation of such individual's marriage (or purported marriage) to such officer shall be considered to be revoked by such officer as of such date of death if the marriage (or purported marriage)—not having taken place as of such date of death—did not take place when scheduled, unless preponderant evidence demonstrates that—

(i) The alteration in schedule was for reasons other than personal differences between the officer and the individual; or

(ii) No such revocation was intended by the officer; and

(2) Any designation of a spouse (or purported spouse) made in contemplation of or during such spouse's (or purported spouse's) marriage (or purported marriage) to such officer (including any designation of the biological or adoptive offspring of such spouse (or purported spouse)) shall be considered to be revoked by such officer as of such date of death if the spouse (or purported spouse) is divorced from such officer subsequent to the date of designation and before such date of death, unless preponderant evidence demonstrates that no such revocation was intended by the officer.

Cardiovascular disease includes heart attack and stroke.

Child-parent relationship means a relationship between a public safety officer and another individual, in which the individual (other than the officer's biological or legally-adoptive parent) has the role of parent, as shown by convincing evidence.

Circumstances other than engagement or participation means—

(1) An event or events; or

(2) An intentional risky behavior or intentional risky behaviors.

Commonly accepted means generally agreed upon within the medical profession.

Competent medical evidence to the contrary—The presumption raised by the Act, at 42 U.S.C. 3796(k), is overcome by competent medical evidence to the contrary, when evidence indicates to a degree of medical probability that circumstances other than any engagement or participation described in the Act, at 42 U.S.C. 3796(k)(1), considered in combination (as one circumstance) or alone, were a substantial factor in

bringing the heart attack or stroke about.

Direct and proximate result of a heart attack or stroke—A death results directly and proximately from a heart attack or stroke if the heart attack or stroke is a substantial factor in bringing it about.

Engagement in a situation—A public safety officer is engaged in a situation only when, within his line of duty—

(1) He is in the course of actually—

(i) Engaging in law enforcement;

(ii) Suppressing fire;

(iii) Responding to a hazardous-materials emergency;

(iv) Performing rescue activity;

(v) Providing emergency medical services; or

(vi) Performing disaster relief activity; or

(vii) Otherwise responding to a fire, rescue, or police emergency; and

(2) The public agency he serves (or the relevant government) legally recognizes him to be in such course (or, at a minimum, does not deny (or has not denied) him so to be).

Event includes occurrence, but does not include any engagement or participation described in the Act, at 42 U.S.C. 3796(k)(1).

Excessive consumption of alcohol—An individual is an excessive consumer of alcohol if he consumes alcohol in amounts commonly accepted to be associated with substantially-increased risk of cardiovascular disease.

Execution of a designation of beneficiary under the Act, at 42 U.S.C. 3796(a)(4)(A) means the legal and valid execution, by the public safety officer, of a writing that, designating a beneficiary, expressly, specifically, or unmistakably refers to—

(1) The Act (or the program it creates); or

(2) All the death benefits with respect to which such officer lawfully could designate a beneficiary (if there be no writing that satisfies paragraph (1) of this definition).

Execution of a life insurance policy means, with respect to a life insurance policy, the legal and valid execution, by the individual whose life is insured thereunder, of—

(1) The approved application for coverage;

(2) A designation of beneficiary; or

(3) A designation of the mode of benefit.

Medical probability—A fact is indicated to a degree of medical probability, when, pursuant to a medical assessment, the fact is indicated by a preponderance of such evidence as may be available.

Most recently executed designation of beneficiary under the Act, at 42 U.S.C. 3796(a)(4)(A) means the most recently executed such designation that, as of the date of death of the public safety officer, designates a beneficiary.

Most recently executed life insurance policy of a public safety officer means the most recently executed policy insuring the life of a public safety officer that, being legal and valid (as a life insurance policy) upon its execution, as of the date of death of such officer—

(1) Designates a beneficiary; and

(2) Remains legally in effect.

Nonroutine strenuous physical activity—Except as excluded by the Act, at 42 U.S.C. 3796(*l*), nonroutine strenuous physical activity means line of duty activity that—

(1) Is not performed as a matter of routine; and

(2) Entails an unusually-high level of physical exertion.

Nonroutine stressful or strenuous physical activity means nonroutine stressful physical activity or nonroutine strenuous physical activity.

Nonroutine stressful physical activity—Except as excluded by the Act, at 42 U.S.C. 3796(*l*), nonroutine stressful physical activity means line of duty activity that—

(1) Is not performed as a matter of routine;

(2) Entails non-negligible physical exertion; and

(3) Occurs—

(i) With respect to a situation in which a public safety officer is engaged, under circumstances that objectively and reasonably—

(A) Pose (or appear to pose) significant dangers, threats, or hazards (or reasonably-foreseeable risks thereof), not faced by similarly-situated members of the public in the ordinary course; and

(B) Provoke, cause, or occasion an unusually-high level of alarm, fear, or anxiety; or

(ii) With respect to a training exercise in which a public safety officer participates, under circumstances that objectively and reasonably—

(A) Simulate in realistic fashion situations that pose significant dangers, threats, or hazards; and

(B) Provoke, cause, or occasion an unusually-high level of alarm, fear, or anxiety.

Parent of a public safety officer means a public safety officer's surviving—

(1) Biological or adoptive parent whose parental rights have not been terminated, as of the injury date; or

(2) Step-parent.

Participation in a training exercise—A public safety officer participates (as a trainer or trainee) in a training exercise only if it is a formal part of an official training program whose purpose is to train public safety officers in, prepare them for, or improve their skills in, particular activity or actions encompassed within their respective lines of duty.

Public safety agency, organization, or unit means a department or agency (or component thereof)—

(1) In which a public safety officer serves in an official capacity, with or without compensation, as such an officer (of any kind but disaster relief worker); or

(2) Of which a public safety officer is an employee, performing official duties as described in the Act, at 42 U.S.C. 3796b(9)(B) or (C), as a disaster relief worker.

Risky behavior means—

(1) Failure (without reasonable justification or excuse) to undertake treatment—

(i) Of any commonly-accepted cardiovascular-disease risk factor associated with clinical values, where such risk factor is—

(A) Known (or should be known) to be present; and

(B) Present to a degree that substantially exceeds the minimum value commonly accepted as indicating high risk;

(ii) Of any disease or condition commonly accepted to be associated with substantially-increased risk of cardiovascular disease, where such associated disease or condition is known (or should be known) to be present; or

(iii) Where a biological parent, -sibling, or -child, is known to have (or have a history of) cardiovascular disease;

(2) Smoking an average of more than one-half of a pack of cigarettes (or its equivalent) per day;

(3) Excessive consumption of alcohol;

(4) Consumption of controlled substances included on Schedule I of the drug control and enforcement laws (see 21 U.S.C. 812(a)), where such consumption is commonly accepted to be associated with increased risk of cardiovascular disease; or

(5) Abuse of controlled substances included on Schedule II, III, IV, or V of the drug control and enforcement laws (see 21 U.S.C. 812(a)), where such abuse is commonly accepted to be associated with increased risk of cardiovascular disease.

Step-parent of a public safety officer means a current or former spouse of the legally-adoptive or biological parent (living or deceased) of a public safety officer conceived (or legally adopted) by that parent before the marriage of the spouse and the parent, which spouse (not being a legally-adoptive parent of the officer), as of the injury date,

(1) Received over half of his support from the officer;

(2) Had as his principal place of abode the home of the officer and was a member of the officer's household; or

(3) Was in a child-parent relationship with the officer.

Undertaking of treatment—An individual undertakes treatment, when he consults with a physician licensed to practice medicine in any jurisdiction described in the Act, at 42 U.S.C. 3796b(8), and complies substantially with his recommendations.

§ 32.14 PSOB Office determination.

(a) Upon its approving or denying a claim, the PSOB Office shall serve notice of the same upon the claimant (and upon any other claimant who may have filed a claim with respect to the same public safety officer). In the event of a denial, such notice shall—

(1) Specify the factual findings and legal conclusions that support it; and

(2) Provide information as to requesting a Hearing Officer determination.

(b) Upon a claimant's failure (without reasonable justification or excuse) to pursue in timely fashion the determination, by the PSOB Office, of his filed claim, the Director may, at his discretion, deem the same to be abandoned. Not less than thirty-three days prior thereto, the PSOB Office shall serve the claimant with notice of the Director's intention to exercise such discretion.

§ 32.15 Prerequisite certification.

(a) Except as provided in the Act, at 42 U.S.C. 3796c–1 or Public Law 107–37, and unless, for good cause shown, the Director grants a waiver, no claim shall be approved unless the following (which shall be necessary, but not sufficient, for such approval) are filed with the PSOB Office:

(1) Subject to paragraph (b) of this section, a certification from the public agency in which the public safety officer served (as of the injury date) that he died as a direct and proximate result of a line of duty injury, and either—

(i) That his survivors (listed by name, address, relationship to him, and amount received) have received (or legally are entitled to receive) the maximum death benefits legally payable by the agency with respect to deaths of public safety officers of his kind, rank, and tenure; or

(ii) Subject to paragraph (c) of this section, that the agency is not legally authorized to pay—

(A) Any benefits described in paragraph (a)(1)(i) of this section, to any person; or

(B) Any benefits described in paragraph (a)(1)(i) of this section, to public safety officers of the kind, rank, and tenure described in such paragraph;

(2) A copy of any rulings made by any public agency that relate to the officer's death; and

(3) A certification from the claimant listing every individual known to him who is or might be the officer's child, spouse, or parent.

(b) The provisions of paragraph (a)(1) of this section shall also apply with respect to every public agency that legally is authorized to pay death benefits with respect to the agency described in that paragraph.

(c) No certification described in paragraph (a)(1)(ii) of this section shall be deemed complete unless it—

(1) Lists every public agency (other than BJA) that legally is authorized to pay death benefits with respect to the certifying agency; or

(2) States that no public agency (other than BJA) legally is authorized to pay death benefits with respect to the certifying agency.

§ 32.16 Payment.

(a) No payment shall be made to (or on behalf of) more than one individual, on the basis of being a public safety officer's parent as his mother, or on that basis as his father. If more than one parent qualifies as the officer's mother, or as his father, payment shall be made to the one with whom the officer considered himself, as of the injury date, to have the closest relationship, except that any biological or legally-adoptive parent whose parental rights have not been terminated as of the injury date shall be presumed rebuttably to be such one.

(b) Any amount payable with respect to a minor or incompetent shall be paid to his legal guardian, to be expended solely for the benefit of such minor or incompetent.

§ 32.17 Request for Hearing Officer determination.

In order to exhaust his administrative remedies, a claimant seeking relief from the denial of his claim shall request a Hearing Officer determination under subpart E of this part. Consistent with § 32.8, any denial that is not the subject of such a request shall constitute the final agency determination.

Subpart C—Disability Benefit Claims

§ 32.21 Scope of subpart.

Consistent with § 32.1, this subpart contains provisions applicable to claims made under the Act—

(a) At 42 U.S.C. 3796(b); or

(b) At 42 U.S.C. 3796c–1 or Public Law 107–37, with respect to a public safety officer's disability.

§ 32.22 Time for filing claim.

(a) Unless, for good cause shown, the Director extends the time for filing, no claim shall be considered if it is filed with the PSOB Office after the later of—

(1) Three years after the injury date; or

(2) One year after the receipt or denial of any benefits described in § 32.25(a)(1)(i) (or receipt of the certification described in § 32.25(a)(1)(ii)).

(b) A claimant may file with his claim such supporting evidence and legal arguments as he may wish to provide.

§ 32.23 Definitions.

Direct result of an injury—A disability results directly from an injury if the injury is a substantial factor in bringing the disability about.

Gainful work means full-or part-time activity that actually is compensated or commonly is compensated.

Medical certainty—A fact exists to a degree of medical certainty, when, pursuant to a medical assessment, the fact is demonstrated by convincing evidence.

Permanently disabled—An individual is permanently disabled only if there is a degree of medical certainty (given the current state of medicine in the United States) that his disabled condition—

(1) Will progressively deteriorate or remain constant, over his expected lifetime; or

(2) Otherwise has reached maximum medical improvement.

Product of an injury—Permanent and total disability is produced by a catastrophic injury suffered as a direct and proximate result of a personal injury if the disability is a direct result of the personal injury.

Residual functional capacity means that which an individual still is capable of doing, as shown by medical (and, as appropriate, vocational) assessment, despite a disability.

Totally disabled—An individual is totally disabled only if there is a degree of medical certainty (given the current state of medicine in the United States) that his residual functional capacity is such that he cannot perform any gainful work.

§ 32.24 PSOB Office determination.

(a) Upon its approving or denying a claim, the PSOB Office shall serve notice of the same upon the claimant. In the event of a denial, such notice shall—

(1) Specify the factual findings and legal conclusions that support it; and

(2) Provide information as to—

(i) Requesting a Hearing Officer determination; or

(ii) As applicable, moving to reconsider a negative disability finding.

(b) Upon a claimant's failure (without reasonable justification or excuse) to pursue in timely fashion the determination of his filed claim, the Director may, at his discretion, deem the same to be abandoned. Not less than thirty-three days prior thereto, the PSOB Office shall serve the claimant with notice of the Director's intention to exercise such discretion.

§ 32.25 Prerequisite certification.

(a) Except as provided in the Act, at 42 U.S.C. 3796c–1 or Public Law 107–37, and unless, for good cause shown, the Director grants a waiver, no claim shall be approved unless the following (which shall be necessary, but not sufficient, for such approval) are filed with the PSOB Office:

(1) Subject to paragraph (b) of this section, a certification from the public agency in which the public safety officer served (as of the injury date) that he was permanently and totally disabled as a direct result of a line of duty injury, and either—

(i) That he has received (or legally is entitled to receive) the maximum disability benefits (including workers' compensation) legally payable by the agency with respect to disabled public safety officers of his kind, rank, and tenure; or

(ii) Subject to paragraph (c) of this section, that the agency is not legally authorized to pay—

(A) Any benefits described in paragraph (a)(1)(i) of this section, to any person; or

(B) Any benefits described in paragraph (a)(1)(i) of this section, to public safety officers of the kind, rank, and tenure described in such paragraph; and

(2) A copy of—

(i) Each State, local, and federal income tax return filed by or on behalf of the public safety officer from the year before the injury date to the date of determination by the PSOB determining official; and

(ii) Any rulings made by any public agency that relate to the claimed disability.

(b) The provisions of paragraph (a)(1) of this section shall also apply with respect to every public agency that legally is authorized to pay disability benefits with respect to the agency described in that paragraph.

(c) No certification described in paragraph (a)(1)(ii) of this section shall be deemed complete unless it—

(1) Lists every public agency (other than BJA) that legally is authorized to pay disability benefits with respect to the certifying agency; or

(2) States that no public agency (other than BJA) legally is authorized to pay disability benefits with respect to the certifying agency.

§ 32.26 Payment.

The amount payable on a claim shall be the amount payable, as of the injury date, pursuant to the Act, at 42 U.S.C. 3796(b).

§ 32.27 Motion for reconsideration of negative disability finding.

A claimant whose claim is denied in whole or in part on the ground that he has not shown that his claimed disability is total and permanent may move for reconsideration, under § 32.28, of the specific finding as to the total and permanent character of the claimed disability (in lieu of his requesting a Hearing Officer determination with respect to the same).

§ 32.28 Reconsideration of negative disability finding.

(a) Unless, for good cause shown, the Director extends the time for filing, no negative disability finding described in § 32.27 shall be reconsidered if the motion under that section is filed with the PSOB Office later than thirty-three days after the service of notice of the denial.

(b) Notwithstanding any other provision of this section, no negative disability finding described in § 32.27 shall be reconsidered—

(1) If or after such reconsideration is rendered moot (*e.g.*, by the final denial of the claim on other grounds, without possibility of further administrative or judicial recourse); or

(2) If a request for a Hearing Officer determination has been filed in timely fashion with respect to such finding.

(c) Unless, for good cause shown, the Director grants a waiver, upon the making of a motion under § 32.27, reconsideration of the negative disability finding described in that section shall be stayed for three years. Upon the conclusion of the stay, the claimant shall have not more than six years to file evidence with the PSOB Office in support of his claimed disability.

(d) Upon a claimant's failure (without reasonable justification or excuse) to file in timely fashion evidence pursuant to paragraph (c) of this section, the Director may, at his discretion, deem the motion for reconsideration to be abandoned, as though never filed. Not less than thirty-three days prior thereto, the PSOB Office shall serve the claimant with notice of the Director's intention to exercise such discretion.

(e) No negative disability finding described in § 32.27 shall be reversed unless a copy (which shall be necessary, but not sufficient, for such reversal) of each federal, State, and local income tax return filed by or on behalf of the claimant from the year before the date of the motion for reconsideration under that section to the date of reversal is filed with the PSOB Office.

(f) Upon its affirming or reversing a negative disability finding described in § 32.27, the PSOB Office shall serve notice of the same upon the claimant. In the event of an affirmance, such notice shall—

(1) Specify the factual findings and legal conclusions that support it; and

(2) Provide information as to requesting a Hearing Officer determination of the disability finding.

§ 32.29 Request for Hearing Officer determination.

(a) In order to exhaust his administrative remedies, a claimant seeking relief from the denial of his claim shall

request a Hearing Officer determination under subpart E of this part—

(1) Of—

(i) His entire claim, if he has not moved for reconsideration of a negative disability finding under § 32.27; or

(ii) The grounds (if any) of the denial that are not the subject of such motion, if he has moved for reconsideration of a negative disability finding under § 32.27; and

(2) Of a negative disability finding that is affirmed pursuant to his motion for reconsideration under § 32.27.

(b) Consistent with § 32.8, the following shall constitute the final agency determination:

(1) Any denial not described in § 32.27 that is not the subject of a request for a Hearing Officer determination under paragraph (a)(1)(i) of this section;

(2) Any denial described in § 32.27 that is not the subject of a request for a Hearing Officer determination under paragraph (a)(1)(ii) of this section, unless the negative disability finding is the subject of a motion for reconsideration; and

(3) Any affirmance that is not the subject of a request for a Hearing Officer determination under paragraph (a)(2) of this section.

Subpart D—Educational Assistance Benefit Claims

§ 32.31 Scope of subpart.

Consistent with § 32.1, this subpart contains provisions applicable to claims (*i.e.*, threshold claims and financial claims) made under the Act, at 42 U.S.C. 3796d–1.

§ 32.32 Time for filing claim.

(a) Subject to the Act, at 42 U.S.C. 3796d–1(c), and to paragraph (b) of this section, a claim may be filed with the PSOB Office at any time after the injury date.

(b) Unless, for good cause shown, the Director grants a waiver, no financial claim may be filed with the PSOB Office, with respect to a grading period that commences more than six months after the date of filing.

(c) A claimant may file with his claim such supporting evidence and legal arguments as he may wish to provide.

§ 32.33 Definitions.

Application means claim (*i.e.*, a threshold claim or a financial claim).

Assistance means financial assistance.

Child of an eligible public safety officer means the child of a public safety officer, which officer is an eligible public safety officer.

Dependent—An individual is a dependent of an eligible public safety officer, if—

(1) Being a child of the officer, the individual—

(i) Was claimed properly as the officer's dependent (within the meaning of the Internal Revenue Code, at 26 U.S.C. 152) on the officer's federal income-tax return (or could have been claimed if such a return had been required by law)—

(A) For the tax year of (or immediately preceding) either the injury date or the date of the officer's death (with respect to a claim by virtue of such death); or

(B) For the relevant tax year (with respect to a claim by virtue of the officer's disability); or

(ii) Is the officer's posthumous child; or

(2) Being a spouse of the officer at the time of the officer's death or on the date of the officer's totally and permanently disabling injury, the individual received over half of his support from the officer (or had as his principal place of abode the home of the officer and was a member of the officer's household)—

(i) As of either the injury date or the date of the officer's death (with respect to a claim by virtue of such death); or

(ii) In the relevant tax year (with respect to a claim by virtue of the officer's disability).

Educational assistance benefits means benefits specifically to assist in paying educational expenses.

Educational expenses means such of the following as may be in furtherance of the educational, professional, or vocational objective of the program of education that forms the basis of a financial claim:

(1) Tuition and fees, as described in 20 U.S.C. 1087*ll*(1) (higher education assistance);

(2) Reasonable expenses for—

(i) Room and board (if incurred for attendance on at least a half-time basis);

(ii) Books;

(iii) Computer equipment;

(iv) Supplies;

(v) Transportation; and

(3) For attendance on at least a three-quarter-time basis, a standard allowance for miscellaneous personal expenses that is the greater of—

(i) The allowance for such expenses, as established by the eligible educational institution for purposes of financial aid; or

(ii) $200.00 per month.

Eligible dependent means an individual who—

(1) Is a dependent of an eligible public safety officer;

(2) Attends a program of education, as described in the Act, at 42 U.S.C. 3796d–1(a)(1); and

(3) Is otherwise eligible to receive financial assistance pursuant to the Act or this subpart.

Eligible educational expenses means a claimant's educational expenses, reduced by the amount of educational assistance benefits from non-governmental organizations that the claimant has received or will receive.

Eligible public safety officer means a public safety officer—

(1) With respect to whose death, benefits under subpart B of this part properly have been paid; or

(2) With respect to whose disability, benefits under subpart C of this part properly—

(i) Have been paid; or

(ii) Would have been paid, but for the operation of paragraph (b)(1) of § 32.6.

Financial assistance means financial assistance, as described in the Act, at 42 U.S.C. 3796d–1.

Financial claim means a request for financial assistance, with respect to attendance at a program of education, for a particular grading period.

Financial need—An individual is in financial need for a particular grading period to the extent that the amount of his eligible educational expenses for that period exceed the sum of—

(1) The amount of his educational assistance benefits as described in the Act, at 42 U.S.C. 3796d–1(a)(3)(A); and

(2) His expected family contribution calculated pursuant to 20 U.S.C. 1087nn (higher education assistance).

Funds means financial assistance.

Grading period means the period of attendance (*e.g.*, a semester, a trimester, a quarter) in a program of education, after (or with respect to) which period grades are assigned, units of credit are awarded, or courses are considered completed, as determined by the eligible educational institution.

Prospective financial claim means a financial claim with respect to a grading period that ends after the claim is filed.

Public safety agency means a public agency—

(1) In which a public safety officer serves in an official capacity, with or without compensation, as such an officer (of any kind but disaster relief worker); or

(2) Of which a public safety officer is an employee, performing official duties as described in the Act, at 42 U.S.C. 3796b(9)(B) or (C), as a disaster relief worker.

Retroactive financial claim means a financial claim with respect to a grading period that ends before the claim is filed.

Spouse of an eligible public safety officer at the time of the officer's death or on the date of a totally and permanently disabling injury means the spouse of a public safety officer (which officer is an eligible public safety officer) as of—

(1) The date of the officer's death (with respect to a claim by virtue of such death); or

(2) The injury date (with respect to a claim by virtue of the officer's disability).

Tax Year—With respect to a claim by virtue of an eligible public safety officer's disability, the relevant tax year is—

(1) The tax year of (or immediately preceding) the injury date;

(2) Any tax year during which the program of education that forms the basis of the claim is attended or is pursued;

(3) The tax year immediately preceding the date on which the program of education that forms the basis of the claim commenced (or is to commence); or

(4) The tax year of (or immediately preceding) the officer's death, where the program of education that forms the basis of the claim commenced (or is to commence) after the date of such death.

Threshold claim means a request for determination of general eligibility to receive financial assistance.

§ 32.34 PSOB Office determination.

(a) In the event of the PSOB Office's denying a claim, the notice it serves upon the claimant shall—

(1) Specify the factual findings and legal conclusions that support the denial; and

(2) Provide information as to requesting a Hearing Officer determination.

(b) No financial claim shall be approved, unless the claimant's threshold claim has been approved.

(c) Upon a claimant's failure (without reasonable justification or excuse) to pursue in timely fashion the determination of his filed claim, the Director may, at his discretion, deem the same to be abandoned. Not less than thirty-three days prior thereto, the PSOB Office shall serve the claimant with notice of the Director's intention to exercise such discretion.

§ 32.35 Disqualification.

No claim shall be approved if the claimant is—

(a) In default on any student loan obtained under 20 U.S.C. 1091 (higher education assistance), unless, for good cause shown, the Director grants a waiver; or

(b) Subject to a denial of federal benefits under 21 U.S.C. 862 (drug traffickers and possessors).

§ 32.36 Payment and repayment.

(a) The computation described in the Act, at 42 U.S.C. 3796d–1(a)(2), shall be based on a certification from the eligible educational institution as to the claimant's full-, three-quarter-, half-, or less-than-half-time student status, according to such institution's own academic standards and practices.

(b) No payment shall be made with respect to any grading period that ended before the injury date.

(c) With respect to any financial claim, no amount shall be payable that exceeds the amount of the eligible educational expenses that form the basis of the claim.

(d) In the event that appropriations for a fiscal year are insufficient for full payment of all approved or anticipated financial claims, the following payments shall be made—

(1) The amounts payable on approved prospective financial claims from claimants in financial need, to the extent of such need (if sufficient funds be available therefor), in the order the claims are approved;

(2) All other amounts payable on approved prospective financial claims (in the order the claims are approved), if sufficient funds be available therefor—

(i) After payment of all amounts payable pursuant to paragraph (d)(1) of this section; and

(ii) After making allowance for anticipated amounts payable in the fiscal year pursuant to paragraph (d)(1) of this section; and

(3) The amounts payable on approved retroactive financial claims (in the order the claims are approved), if sufficient funds be available therefor—

(i) After payment of all amounts payable pursuant to paragraphs (d)(1) and (2) of this section; and

(ii) After making allowance for anticipated amounts payable in the fiscal year, pursuant to paragraphs (d)(1) and (2) of this section.

(e) In the event that, at the conclusion of a fiscal year, any amounts remain payable on an approved financial claim, such amounts shall remain payable thereafter until paid (when appropriations be sufficient therefor).

(f) In the event that any amounts remain payable on an approved prospective financial claim after the end of the grading period that forms its basis, such claim shall be deemed an approved retroactive financial claim for purposes of paragraph (d) of this section.

(g) No payment shall be made to (or on behalf of) any individual, on the basis of being a particular living public safety officer's spouse, unless the individual is the officer's spouse on the date of payment.

(h) Unless, for good cause shown, the Director grants a full or partial waiver, a payee shall repay the amount paid to

him (or on his behalf) pursuant to a prospective financial claim if, during the grading period that forms its basis—

(1) He fails to maintain satisfactory progress under 20 U.S.C. 1091(c) (higher education assistance);

(2) He fails to maintain the enrollment status described in his claim; or

(3) By his acts or omissions, he is or becomes ineligible for financial assistance.

§ 32.37 Request for Hearing Officer determination.

In order to exhaust his administrative remedies, a claimant seeking relief from the denial of his claim shall request a Hearing Officer determination under subpart E of this part. Consistent with § 32.8, any denial that is not the subject of such a request shall constitute the final agency determination.

Subpart E—Hearing Officer Determinations

§ 32.41 Scope of subpart.

Consistent with § 32.1, this subpart contains provisions applicable to requests for Hearing Officer determination of claims denied under subpart B, C (including affirmances of negative disability findings described in § 32.27), or D of this part.

§ 32.42 Time for filing request for determination.

(a) Unless, for good cause shown, the Director extends the time for filing, no claim shall be determined if the request therefor is filed with the PSOB Office later than thirty-three days after the service of notice of—

(1) The denial (under subpart B, C (except as may be provided in paragraph (a)(2) of this section), or D of this part) of a claim; or

(2) The affirmance (under subpart C of this part) of a negative disability finding described in § 32.27.

(b) A claimant may file with his request for a Hearing Officer determination such supporting evidence and legal arguments as he may wish to provide.

§ 32.43 Appointment and assignment of Hearing Officers.

(a) Pursuant to 42 U.S.C. 3787 (employment and authority of hearing officers), Hearing Officers may be appointed from time to time by the Director, to remain on the roster of such Officers at his pleasure.

(b) Upon the filing of a request for a Hearing Officer determination, the PSOB Office shall assign the claim to a Hearing Officer on the roster; the PSOB Office may assign a particular claim to a specific Hearing Officer if it judges, in its discretion, that his experience or expertise suit him especially for it.

(c) Upon its making the assignment described in paragraph (b) of this section, the PSOB Office shall serve notice of the same upon claimant, with an indication that any evidence or legal argument he wishes to provide is to be filed simultaneously with the PSOB Office and the Hearing Officer.

(d) With respect to an assignment described in paragraph (b) of this section, the Hearing Officer's consideration shall be—

(1) *De novo*, rather than in review of the findings, determinations, affirmances, reversals, assignments, authorizations, decisions, judgments, rulings, or other actions of the PSOB Office; and

(2) Consistent with subpart B, C, or D of this part, as applicable.

(e) OJP's General Counsel shall provide advice to the Hearing Officer as to all questions of law relating to a claim assigned pursuant to paragraph (b) of this section.

§ 32.44 Hearing Officer determination.

(a) Upon his determining a claim, the Hearing Officer shall file notice of the same simultaneously with the Director (for his review under subpart F of this part (in the event of approval)), the PSOB Office, and OJP's General Counsel, which notice shall specify the factual findings and legal conclusions that support it.

(b) Upon a Hearing Officer's denying a claim, the PSOB Office shall serve notice of the same upon the claimant (and upon any other claimant who may have filed a claim with respect to the

same public safety officer), which notice shall—

(1) Specify the Hearing Officer's factual findings and legal conclusions that support it; and

(2) Provide information as to Director appeals.

(c) Upon a claimant's failure (without reasonable justification or excuse) to pursue in timely fashion the determination of his claim pursuant to his filed request therefor, the Director may, at his discretion, deem the request to be abandoned, as though never filed. Not less than thirty-three days prior thereto, the PSOB Office shall serve the claimant with notice of the Director's intention to exercise such discretion.

§ 32.45 Hearings.

(a) At the election of a claimant under subpart B or C of this part, the Hearing Officer shall hold a hearing, at a location agreeable to the claimant and the Officer, for the sole purposes of obtaining, consistent with § 32.5(c),

(1) Evidence from the claimant and his fact or expert witnesses; and

(2) Such other evidence as the Hearing Officer, at his discretion, may rule to be necessary or useful.

(b) Unless, for good cause shown, the Director extends the time for filing, no election under paragraph (a) of this section shall be honored if it is filed with the PSOB Office later than ninety days after service of the notice described in § 32.43(c).

(c) Not less than seven days prior to any hearing, the claimant shall file simultaneously with the PSOB Office and the Hearing Officer a list of all expected fact or expert witnesses and a brief summary of the evidence each witness is expected to provide.

(d) At any hearing, the Hearing Officer—

(1) May exclude any evidence whose probative value is substantially outweighed by considerations of undue delay, waste of time, or needless presentation of cumulative evidence; and

(2) Shall exclude witnesses (other than the claimant, or any person whose presence is shown by the claimant to be essential to the presentation of his claim), so that they cannot hear the testimony of other witnesses.

(e) Each hearing shall be recorded, and the original of the complete record or transcript thereof shall be made a part of the claim file.

(f) Unless, for good cause shown, the Director grants a waiver, a claimant's failure to appear at a hearing (in person or through a representative) shall constitute a withdrawal of his election under paragraph (a) of this section.

(g) Upon a claimant's failure to pursue in timely fashion his filed election under paragraph (a) of this section, the Director may, at his discretion, deem the same to be abandoned. Not less than thirty-three days prior thereto, the PSOB Office shall serve the claimant with notice of the Director's intention to exercise such discretion.

§ 32.46 Director appeal.

(a) In order to exhaust his administrative remedies, a claimant seeking relief from the denial of his claim shall appeal to the Director under subpart F of this part.

(b) Consistent with § 32.8, any claim denial that is not appealed to the Director under paragraph (a) of this section shall constitute the final agency determination, unless the denial is reviewed otherwise under subpart F of this part.

Subpart F—Director Appeals and Reviews

§ 32.51 Scope of subpart.

Consistent with § 32.1, this subpart contains provisions applicable to Director appeals and reviews of claim approvals and denials made under subpart E of this part, and reviews of claim approvals under the Act, at 42 U.S.C. 3796c–1 or Public Law 107–37.

§ 32.52 Time for filing Director appeal.

(a) Unless, for good cause shown, the Director extends the time for filing, no Director appeal shall be considered if it is filed with the PSOB Office later than thirty-three days after the service of notice of the denial (under subpart E of this part) of a claim.

(b) A claimant may file with his Director appeal such supporting evidence and legal arguments as he may wish to provide.

§ 32.53 Review.

(a) Upon the filing of the approval (under subpart E of this part) of a claim, the Director shall review the same.

(b) The Director may review—

(1) Any claim denial made under subpart E of this part; and

(2) Any claim approval made under the Act, at 42 U.S.C. 3796c–1 or Public Law 107–37.

(c) Unless the Director judges that it would be unnecessary, the PSOB Office shall serve notice upon the claimant (and upon any other claimant who may have filed a claim with respect to the same public safety officer) of the initiation of a review under paragraph (a) or (b) of this section. Unless the Director judges that it would be unnecessary, such notice shall—

(1) Indicate the principal factual findings or legal conclusions at issue; and

(2) Offer a reasonable opportunity for filing of evidence or legal arguments.

§ 32.54 Director determination.

(a) Upon the Director's approving or denying a claim, the PSOB Office shall serve notice of the same simultaneously upon the claimant (and upon any other claimant who may have filed a claim with respect to the same public safety officer), and upon any Hearing Officer who made a determination with respect to the claim. In the event of a denial, such notice shall—

(1) Specify the factual findings and legal conclusions that support it; and

(2) Provide information as to judicial appeals (for the claimant or claimants).

(b) Upon a claimant's failure (without reasonable justification or excuse) to pursue in timely fashion the determination of his claim pursuant to his filed Director appeal, the Director may, at his discretion, deem the same to be abandoned, as though never filed. Not less than thirty-three days prior thereto, the PSOB Office shall serve the claimant with notice of the Director's intention to exercise such discretion.

§ 32.55 Judicial appeal.

(a) A claimant seeking relief from the denial of his claim may appeal judicially under 28 U.S.C. 1491(a) (claims against the United States).

(b) Consistent with § 32.8, any approval or denial described in § 32.54(a) shall constitute the final agency determination.

PART 33—BUREAU OF JUSTICE ASSISTANCE GRANT PROGRAMS

Subpart A—Criminal Justice Block Grants

GENERAL PROVISIONS

Sec.
33.1 General.
33.2 Statutory authority.
33.3 OMB approval of information collection requirements.

ELIGIBLE APPLICANTS

33.10 State government.
33.11 Units of local government.
33.12 Establishment of State Office.

ALLOCATION OF FUNDS

33.20 Fund availability.
33.21 Match.
33.22 Title to personal property.
33.23 Limitations on fund use.

PURPOSES OF BLOCK GRANT FUNDS

33.30 Program criteria.
33.31 Eligible purposes and programs.
33.32 Certified programs.

APPLICATION REQUIREMENTS

33.40 General.
33.41 Application content.

ADDITIONAL REQUIREMENTS

33.50 General financial requirements.
33.51 Audit.
33.52 Civil rights.
33.53 Participation by faith-based organizations.

SUBMISSION AND REVIEW OF APPLICATIONS

33.60 General.
33.61 Review of State applications.

REPORTS

33.70 Annual performance report.
33.71 Initial project report.

SUSPENSION OF FUNDING

33.80 Suspension of funding.

Subpart B—Bulletproof Vest Partnership Grant Program Applying for the Program

33.100 Definitions.
33.101 Standards and requirements.
33.102 Preferences.

33.103 How to apply.

AUTHORITY: 42 U.S.C. 3701 through 3797y–4; 5 U.S.C. 301.

SOURCE: 50 FR 22990, May 30, 1985, unless otherwise noted.

Subpart A—Criminal Justice Block Grants

GENERAL PROVISIONS

§ 33.1 General.

This subpart defines eligibility criteria and sets forth requirements for application for and administration of block grants by state and local governments.

[50 FR 22990, May 30, 1985, as amended at 63 FR 50761, Sept. 23, 1998]

§ 33.2 Statutory authority.

The statutory authority for the regulations is the Omnibus Crime Control and Safe Streets Act of 1968, 42 U.S.C. 3701, *et. seq.*, as amended (Pub. L. 90–351, as amended by Pub. L. 93–83, Pub. L. 93–415, Pub. L. 94–430, Pub. L. 94–503, Pub. L. 95–115, Pub. L. 96–157, and Pub. L. 98–473) (hereinafter referred to as the Justice Assistance Act of 1984 or the Act).

§ 33.3 OMB approval of information collection requirements.

The information collection requirements in this subpart A have been approved by the Office of Management and Budget under control no. 1121–0113.

[50 FR 22990, May 30, 1985, as amended at 63 FR 50761, Sept. 23, 1998]

ELIGIBLE APPLICANTS

§ 33.10 State government.

All states are eligible to apply for and receive block grants. Section 404 of the Act. State, as defined in the statute, means any state of the United States and includes the District of Columbia, the Commonwealth of Puerto Rico, and the Virgin Islands. Section 901(a)(2) of the Act.

§ 33.11 Units of local government.

(a) Units of local government are eligible to receive subgrants from a participating state. Unit of local government means any city, county, township, borough, parish, village, or other general purpose political subdivision of a state and includes Indian tribes which perform law enforcement functions as determined by the Secretary of the Interior. Section 901(a)(3) of the Act.

(b) If the Bureau determines, during any fiscal year, that a portion of the funds allocated to a state will not be required, or that a state will be unable to qualify and receive funds, or that a state chooses not to participate in the program, then the Bureau shall award the funds allocated to the state directly to urban, rural, and suburban units of local government or combinations thereof within the state, giving priority to those jurisdictions with the greatest need. Section 407(d) of the Act.

§ 33.12 Establishment of State Office.

(a) Section 408(a) of the Act provides that the chief executive of each participating state shall designate a State Office for the purposes of:

(1) Preparing an application to obtain funds; and

(2) Administering funds received from the Bureau of Justice Assistance, including receipt, review, processing, monitoring, progress and financial report review, technical assistance, grant adjustments, accounting, auditing, and fund disbursements.

(b) An office or agency performing other functions within the state's executive branch may be designated as the State Office. Section 408(b) of the Act.

ALLOCATION OF FUNDS

§ 33.20 Fund availability.

Section 407(a) of the Justice Assistance Act provides that 80 percent of the total amount appropriated for part D (block grants) and part E (discretionary grants) shall be allocated for block grants.

(a) *Allocation to States.* Each participating state shall receive a base amount of $250,000 with the remaining funds allocated to each state on the basis of the state's relative share of total U.S. population. Section 407(a) of the Act. If a state does not elect to participate in the Act, the states allocation shall be awarded by the Bureau directly to local units of government and

combinations of units of local government within the state. Section 407(d) of the Act.

(b) *Allocation of funds within the State.* (1) Funds granted to the state are further subgranted by the state to state agencies and units of local government to carry out programs and projects contained in an approved application. Each state shall distribute to its local units of government, in the aggregate, a portion of the state's block grant funds equal to the local government share of total state and local criminal justice expenditures. Section 407(b) of the Act. In determining the portion to be distributed to local units, the most recent and complete data available from the Bureau of Justice Statistics of the U.S. Department of Justice shall be used unless the use of other data has been approved in advance by the Bureau of Justice Assistance.

(2) To request approval of a distribution ratio other than that based on data of the Bureau of Justice Statistics, the head of the State Office must certify in writing to the Bureau of Justice Assistance that the ratio it proposes is a correct reflection of the local share of total state and local criminal justice expenditures and that the state has notified its major local governments of the request and informed them of the opportunity to contact the Bureau within 30 days, if they have any objections. The written request must also cite the expenditure data used to substantiate the proposed change.

(c) *Allocation based on greatest need.* In distributing funds among urban, rural, and suburban units of local government, the state shall give priority to those jurisdictions with the greatest need. Section 407(b)(2) of the Act.

§ 33.21 Match.

(a) Funds may be used to pay up to 50 percent of the cost of a program or project. Section 403(b)(1) of the Act. The remaining non-Federal share shall be in cash. Section 403(b)(2) of the Act. Match will be provided on a project by project basis. However, states may request the Bureau to approve exceptions such as match on a program by program basis, state-wide basis, unit-of-government basis, or a combination of the above. States must include any requests for approval of other than project-by-project match in their applications to the Bureau.

(b) Funds subgranted to an Indian tribe which performs law enforcement functions (as determined by the Secretary of the Interior) shall be used to pay 100 percent of the cost of a program or project. Section 403(b)(1) of the Act.

§ 33.22 Title to personal property.

Section 808 of the Justice Assistance Act provides that notwithstanding any other provision of law, title to all expendable and nonexpendable personal property purchased with funds made available under this title, including property with funds made available under this title as in effect before the effective date of the Justice Assistance Act of 1984, shall vest in the criminal justice agency or nonprofit organization that purchased the property if it certifies to the State Office that it will use the property for criminal justice purposes. If such certification is not made, title to the property shall vest in the State Office, which shall seek to have the property used for criminal justice purposes elsewhere in the state prior to using it or disposing of it in any other manner. If a State Office does not exist, certification will be made directly to the Bureau of Justice Assistance.

§ 33.23 Limitations on fund use.

In order to insure the most efficient and effective use of grant funds, the Justice Assistance Act places restrictions on the award of block monies for routine equipment, personnel costs, construction, supplanting of state and local funds, and land acquisition.

(a) *Equipment and hardware.* The purchase or acquisition of equipment or hardware with grant funds is prohibited unless the purchase or acquisition is an incidental and necessary part of a program. Section 406(c)(1) of the Act.

(b) *General salaries and personnel costs.* Payment of personnel costs with grant funds is prohibited unless the costs are an incidental and necessary part of a program. Section 406(c)(1) of the Act. Programs which have as their primary purpose the payment of usual salaries

paid to employees generally, or to specific classes of employees within a jurisdiction, are prohibited. Notwithstanding the above, grant funds may be used to compensate personnel for time engaged in conducting or undergoing training programs or the compensation of personnel engaged in research, development demonstration, or short-term programs. Section 406(c)(2) of the Act.

(c) *Construction.* Construction projects are prohibited. Section 406(c)(3) of the Act.

(d) *Land acquisition.* Acquisition of land with grant funds is prohibited. Section 406(c)(3) of the Act.

(e) *Ineffective programs.* The use of grant funds is prohibited for programs or projects which, based upon evaluations by the National Institute of Justice, Bureau of Justice Assistance, Bureau of Justice Statistics, state or local agencies, and other public or private organizations, have been demonstrated to offer a low probability of improving the functioning of the criminal justice system. The Bureau of Justice Assistance will formally identify ineffective programs by notice in the FEDERAL REGISTER after opportunity for public comment. Section 406(c)(4) of the Act.

(f) *Administrative costs.* The use of grant funds to pay for costs incurred in applying for or administering the block grant is prohibited. Block grant funds may only be used to carry out programs that fall within one of the purposes listed in section 403(a) of the Justice Assistance Act. Section 403(a) of the Act.

(g) *Period of project support.* A grant recipient may receive block grant funds for a specific program or project for a period not to exceed four years. The four-year maximum allowable period of funding includes any period prior to the Justice Assistance Act when the program or project was supported by funds made available under title I of the Omnibus Crime Control and Safe Streets Act. Section 403(c) of the Act.

(h) *Non-supplantation.* Block grant funds shall not be used to supplant state or local funds, but will be used to increase the amounts of such funds that would, in the absence of Federal aid, be made available for criminal justice activities. Section 405(2) of the Act.

PURPOSES OF BLOCK GRANT FUNDS

§ 33.30 Program criteria.

The Justice Assistance Act requires that block grant funds assist states and local governments to carry out specific programs which offer a high probability of improving the functioning of the criminal justice system, with special emphasis on violent crime and serious offenders. Section 403(a) of the Act.

(a) *High probability of improving the criminal justice system. High probability of improving the criminal justice system* means that a prudent assessment of the concepts and implementation plans included in a proposed program, project, approach, or practice, together with an assessment of the problem to which it is addressed and of data and information bearing on the problem, concept, and implementation plan, provides strong evidence that the proposed activities would result in identifiable improvements in the criminal justice system if implemented as proposed. Section 901(a)(21) of the Act.

(b) *Special emphasis on violent crime and serious offenders. Special emphasis on violent crime and serious offenders* means that a relationship exists between the program and violent crime, the victims of violent crime, serious offenders and their acts, and the prevention of violent crime and serious offenses. Violent crime, for the purpose of this program, includes homicide, robbery, assault, arson, residential burglary, child abuse and molestation, sexual assault, kidnapping, and all felonies involving weapons or narcotics trafficking. Serious offenders are those who commit violent crimes.

(c) *Criminal justice. Criminal justice* means activities pertaining to crime prevention, control, or reduction, or the enforcement of the criminal law, including but not limited to, police efforts to prevent, control, or reduce crime or to apprehend criminals, including juveniles, activities of courts

having criminal jurisdiction, and related agencies (including but not limited to prosecutorial and defender services, juvenile delinquency agencies, and pretrial service or release agencies), activities of corrections, probation or parole authorities and related agencies assisting in the rehabilitation, supervision, and care of criminal offenders, and programs relating to the prevention, control, or reduction of narcotic addiction and juvenile delinquency. Section 901(a)(1) of the Act.

§ 33.31 Eligible purposes and programs.

(a) *Eligible purposes.* Block grant funds may be used for the following purposes listed in section 403(a) of the Justice Assistance Act:

(1) Providing community and neighborhood programs that enable citizens and police to undertake initiatives to prevent and control neighborhood crime;

(2) Disrupting illicit commerce in stolen goods and property;

(3) Combating arson;

(4) Effectively investing and bringing to trial white-collar crime, organized crime, public corruption crimes, and fraud against the Government;

(5) Identifying criminal cases involving persons (including juvenile offenders) with a history of serious criminal conduct in order to expedite the processing of such cases and to improve court system management and sentencing practices and procedures in such cases;

(6) Developing and implementing programs which provide assistance to jurors and witnesses, and assistance (other than compensation) to victims of crimes;

(7) Providing alternatives to pretrial detention, jail, and prison for persons who pose no danger to the community;

(8) Providing programs which identify and meet the needs of drug-dependent offenders;

(9) Providing programs which alleviate prison and jail overcrowding and programs which identify existing state and Federal buildings suitable for prison use;

(10) Providing, management, and technical assistance to criminal justice personnel and determining appropriate prosecutorial and judicial personnel needs;

(11) Providing prison industry projects designed to place inmates in a realistic working and training environment in which they will be enabled to acquire marketable skills and to make financial payments for restitution to their victims, for support of their own families, and for support of themselves in the institution;

(12) Providing for operational information systems and workload management systems which improve the effectiveness of criminal justice agencies;

(13) Not more than 10 percent of the state's block grant funds for providing programs of the same types as described in section 501(a)(4) of the Act which:

(i) The Bureau establishes under section 503(a) of the Act as discretionary programs for financial assistance; or

(ii) Are innovative and have been deemed by the Bureau as likely to prove successful;

(14) Implementing programs which address critical problems of crime, such as drug trafficking, which have been certified by the Director of the Bureau of Justice Assistance as having proved successful, after a process of consultation coordinated by the Assistant Attorney General of the Office of Justice Programs with the Director of the National Institute of Justice, Director of the Bureau of Justice Statistics, and Administrator of the Office of Juvenile Justice and Delinquency Prevention;

(15) Providing programs which address the problem of serious offenses committed by juveniles;

(16) Addressing the problem of crime committed against the elderly;

(17) Providing training, technical assistance, and programs to assist state and local law enforcement authorities in rural areas in combating crime, with particular emphasis on violent crime, juvenile delinquency, and crime prevention; and

(18) Improving the operational effectiveness of law enforcement by integrating and maximizing the effectiveness of police field operations and the use of crime analysis techniques.

(b) *Programs.* The Bureau of Justice Assistance has certified that specific

programs meet these purposes, conform with the program criteria, and are eligible for block grant support. (See § 33.32 of the regulations, *Certified Programs)*. These programs are described in *Program Briefs* that are available from the Bureau of Justice Assistance. The list of certified programs will be expanded in the future based on the statutory criteria to permit a more complete coverage of each of the purposes. This certification will be done in consultation with state and local governments and published in the FEDERAL REGISTER. States and localities may use block funds to implement one or more of these certified programs, if they agree to comply with the critical elements set forth in § 33.32 of these regulations, and to provide data on the performance indicators listed. States and localities selecting these programs may identify the certified program in their application by name only, without further description. Programs other than those certified by the Bureau of Justice Assistance may be proposed by the state and/or units of local government and approved for funding by the Bureau. To obtain approval to fund a proposed program, the applicant must provide in its application a description of the program and evidence that it meets the statutory program criteria. The application requirements for program approval are contained in Subpart E—Application Requirements.

§ 33.32 Certified programs.

(a) The Act encourages the implementation of programs that have been proven successful. Pursuant to section 403(a)(14) of the Act, the Bureau of Justice Assistance, after a process of consultation coordinated by the Assistant Attorney General of the Office of Justice Programs with the National Institute of Justice, the Bureau of Justice Statistics, and the Office of Juvenile Justice and Delinquency Prevention, certifies that the following programs have been proven successful:

(1)(i) *Purpose:* Providing community and neighborhood programs that enable citizens and police to undertake initiatives to prevent and control neighborhood crime.

(ii) *Certified program: Community crime prevention*. This program aims to prevent crime and reduce the fear of crime through organized collective citizen action. Community crime prevention programs may be initiated by either law enforcement agencies or existing community groups, but each must have the active support and involvement of the other. Local programs must be designed to meet the needs and problems of specific neighborhoods or communities and particular population groups, including the elderly. They must make extensive use of volunteers. The specific services or activities to be implemented depend on the local situation and crime problem, but usually have, as a core element, neighborhood (block) watch with additional activities optional. Programs to provide training, technical assistance and other support services are also eligible for funding. Program objectives and elements are described in greater detail in the *Program Brief on Community Crime Prevention*.

(A) *Critical elements:*

(*1*) Pre-program planning to determine needs and problems of community.

(*2*) Targeting of activities and services to meet local situation.

(*3*) Maximum use of volunteers.

(*4*) Cooperation of community organizations and law enforcement.

(B) *Optional activities:* Projects must implement one or more of the following:

(*1*) Neighborhood Watch

(*2*) Operation ID

(*3*) Security Surveys

(*4*) Citizen Patrols

(*5*) Escort or Special Services for the Elderly

(*6*) Block Homes or Safe-Houses

(*7*) Neighborhood Clean-Ups in High Crime Areas

(*8*) Public Education

(*9*) Training

(*10*) Technical Assistance

(C) *Performance indicators:*

(*1*) Number of staff assigned to project.

(*2*) Types of services provided.

(*3*) Units of service delivered (e.g., number of block watches organized).

(*4*) Number of volunteers participating.

(2)(i) *Purpose:* Disrupting illicit commerce in stolen goods and property.

(ii) *Certified program: Property Crime (STING) Program.* This program targets the apprehension and prosecution of burglars/thieves as well as those individuals who provide the outlets for receipt of stolen goods and property. The majority of the model programs have established *storefronts* in which law enforcement officers pose as fences who buy stolen goods. In areas where there is a high concentration of organized crime, programs have employed techniques to infiltrate organizations in order to obtain evidence for prosecution of serious crime. Program objectives and elements are described in greater detail in the *Program Brief on Property Crime (STING) Program.*

(A) *Critical elements:*

(*1*) Program planning, which consists of:

(*i*) Analysis of the stolen property redistribution system in the jurisdiction.

(*ii*) Selection of the target criminal population and/or property at which the program will be directed.

(*iii*) Establishment of policies and procedures governing roles of participants, and program implementation.

(*2*) Establishment of records maintenance and management system; security management procedures; and stolen property/contraband/evidence management.

(*3*) Implementation of operations, including undercover activities and ongoing intelligence gathering and analysis.

(*4*) Coordination with prosecutorial personnel in case development and proper use of undercover techniques; and cooperation with victims to assure return of property.

(B) *Performance indicators:*

(*1*) Number of arrest and type of offense.

(*2*) Number of convictions.

(*3*) Dollar value of property received.

(*4*) Dollar value of property returned to victims.

(*5*) Number of fencing operations disrupted.

(3)(i) *Purpose:* Combating arson.

(ii) *Certified program: Arson Prevention and Control Program.* This program employs the task force concept as a strategy to prevent and control the malicious or fraudulent burning of property. It attempts to reduce the incidence of arson and increase arrest, prosecution and conviction rates. The program focuses on arson that is economically motivated. Program objectives and elements are described in greater detail in the *Program Brief on Arson Prevention and Control.*

(A) *Critical elements:*

(*1*) Program planning to establish:

(*i*) An understanding to the area's specific arson problems.

(*ii*) A selection of program priorities, strategies, and the targeting of the criminal population.

(*iii*) An outline of policies and procedures for program participants and program implementation.

(*iv*) Written agreements indicating participation in the program, acceptance of established criteria and procedures, and commitment of resources.

(*2*) Establishment of a system for collecting and analyzing data to target and identify arson patterns, methods and areas of vulnerability.

(*3*) Establishment of investigative and prosecutorial elements directed at the crime of arson.

(*4*) Involvement of community groups and private industry in support of the program.

(B) *Performance indicators:*

(*1*) Number of staff assigned to the project.

(*2*) Number of confirmed arson incidents reported during reporting period.

(*3*) Number of confirmed arson incidents reported during equivalent pre-reporting period.

(*4*) Number of incidents resulting in a prosecution during program period.

(*5*) Number of incidents resulting in a prosecution during equivalent pre-reporting period.

(*6*) Number of prosecutions resulting in conviction.

(*7*) Amount of property damage/loss caused by incendiary/suspicious fires during program period.

(*8*) Amount of property damage/loss by incendiary/suspicious fires during equivalent pre-reporting period.

(4)(i) *Purpose:* Effectively investigating and bringing to trial white-collar crime, organized crime, public corruption crime, and fraud against the Government. (No specific program has

been certified by the Bureau. Applicants may propose programs for approval in accordance with the provisions of § 33.41.)

(5)(i) *Purpose:* Identifying criminal cases involving persons (including juvenile offenders) with a history of serious criminal conduct in order to expedite the processing of such cases and to improve court system management and sentencing practices and procedures in such cases.

(ii) *Certificate program: Career Criminal Prosecution Program.* This program targets the identification and prosecution of violent and repeat offenders. Model efforts include a full time prosecutorial unit devoted to increasing the rate of prosecution of such offenders, special screening criteria, and policies that initiate or enhance vertical prosecution. Program objectives and elements are described in greater detail in the *Program Brief on Career Criminal Prosecution.*

(A) *Critical elements:*

(*1*) Screening and prosecution criteria to identify cases involving violent offenses and repeat offenders.

(*2*) A separate, full-time prosecutorial unit for violent and repeat offenders to enable vertical prosecution of assigned cases.

(*3*) Reduction of caseload to enable thorough case preparation/presentation.

(*4*) A policy requiring limited or no plea negotiations.

(*5*) A policy of opposing pre-trial motions for continuances.

(*6*) A policy to maintain effective communications with victims and witnesses.

(B) *Performance indicators:*

(*1*) Number of full-time prosecutors assigned to unit.

(*2*) Number of cases meeting established criteria.

(*3*) Number of cases prosecuted.

(*4*) Number of and percentage of cases resulting in conviction.

(*5*) Number and percentage of individuals incarcerated.

(iii) *Certified program: Court Delay Reduction Program.* This program expedites the processing of felony cases in trial courts. It emphasizes reduction of backlogs while maintaining equitable treatment and due process. Model programs result in reduction of case processing time, minimization of court appearances for victims and witnesses, and improvement of the public's perception of the quality of the criminal justice system. This program is available for both metropolitan trial courts and state-level court systems. Program objectives and elements are described in greater detail in the *Program Brief on Court Delay Reduction.*

(A) *Critical elements:* Both the metropolitan and the state level programs are divided into two phases, planning and implementation.

(*1*) *Planning* (Phase I):

(*i*) Formation of delay reduction advisory committee.

(*ii*) Data collection, analysis, and problem identification.

(*iii*) Adoption of case processing goals for criminal cases.

(*iv*) Development of action plan(s).

(*2*) *Implementation* (Phase II):

(*i*) Education of trial judges and others on objectives, standards and procedures.

(*ii*) Systematic monitoring of all criminal cases filed in participating courts.

(*iii*) System for regular acquisition and assessment of data from each trial court (state level only).

(*iv*) Modification of rules and procedures at all levels of program participation when program results indicate need for changes.

(B) *Performance indicators.* (*1*) Time standard established for processing of criminal cases under the project (days from arrest to trial).

(*2*) Percentage of criminal cases prior to project that met standard.

(*3*) Percentage of criminal cases disposed of during the project reporting period that met time disposition standard.

(*4*) Reduction in the average number of continuances from the equivalent pre-project period.

(6)(i) *Purpose:* Developing and implementing programs which provide assistance to jurors and witnesses, and assistance (other than compensation) to victims of crimes.

(ii) *Certified program: victim assistance.* This program provides services and assistance to victims in order to speed their recovery from the financial loss,

physical suffering and emotional trauma of victimization, and to assure proper and sensitive treatment of innocent victims in the criminal justice process. Victim assistance programs usually encompass a wide range of support services. The specific services to be provided, and the specific target group should reflect local needs and priorities. Program objectives and elements are described in greater detail in the *Program Brief on Victim Assistance*.

(A) *Critical elements:*

(*1*) Analysis of the community's victim/witness needs and problems.

(*2*) Targeting of existing and planned activities and services to respond to this community situation.

(*3*) Formulation of agreements for cooperation between criminal justice system agencies and public and private victim/witness service providers.

(B) *Optional activities:* Projects must implement a minimum of three (3) or more of the following:

(*1*) 24 hour crisis intervention and support or emergency services.

(*2*) Counseling.

(*3*) Assistance with compensation claims, creditors, community referrals, and restitution.

(*4*) Police, prosecutor or court-related services.

(*5*) Safety (including shelter), supportive counseling, social services support and criminal justice advocacy.

(*6*) Training and education for individuals having direct contact with the victims, i.e., police, medical personnel, prosecutors, judges, etc.

(C) *Performance indicators:*

(*1*) Number of staff assigned to project.

(*2*) Types of services provided.

(*3*) Number of victims/witnesses served (by type of service).

(*4*) Number of criminal justice personnel and others trained.

(7)(i) *Purpose:* Providing alternatives to pretrial detention, jail, and prison for persons who pose no danger to the community.

(ii) *Certified program: Jail overcrowding/alternatives to pretrial detention*. This program aims to control jail population through improved intake screening which assures that persons who should be in jail are detained, and that alternatives are available for those requiring less than maximum supervision. Particular care must be taken that persons charged with violent crimes be detained and that the impact on victims and witnesses be a factor in screening decisions. The program calls for the development of a jail population management plan as part of a planning phase, followed by implementation of specific activities and services. Among the activities and services that may be funded are central intake and screening, pretrial services, diversion to detoxification centers, citation release, community corrections, sentencing alternatives, and jail management information systems. Program objectives and elements are described in greater detail in the *Program Brief on Jail Overcrowding/Alternatives to Pretrial Detention*.

(A) *Critical elements:*

(*1*) Implementation of program by state.

(*2*) Formation of broad-based jail policy committee.

(*3*) Program planning that includes data collection, analysis, problem identification, and development of jail population management plan, including the removal of juveniles from adult jails and lockups.

(*4*) Implementation of plan.

(B) *Optional activities:* Based on their plans, projects must implement one or more of the following activities or components:

(*1*) Central intake and classification.

(*2*) Comprehensive pre-trial services.

(*3*) Diversion of public inebriates to detoxification centers.

(*4*) Diversion of juveniles to secure and non-secure alternatives.

(*5*) Citation release.

(*6*) Community correction centers.

(*7*) Sentencing alternatives (including restitution and work release).

(*8*) Jail management information system.

(C) *Performance indicators:*

(*1*) Number of staff assigned to project.

(*2*) Pretrial jail population.

(*3*) Types of services and alternatives implemented.

(*4*) Numbers of arrestees served/diverted by type of alternative.

(*5*) Convicted clients completing alternative punishment successfully.

(*6*) Re-arrest rate of released defendants.

(*7*) Estimated jail days saved.

(8)(i) *Purpose:* Providing programs which identify and meet the needs of drug-dependent offenders.

(ii) *Certified program: Treatment Alternatives to Street Crime Program (TASC).* This program intervenes in the criminal justice process by early identification of substance-abusing offenders, referral to community treatment resources, and monitoring of treatment. Model programs provide the following services: screening arrestees, providing diagnostic/referral services for treatment, and monitoring progress of clients. Persons charged with or convicted of violent crimes including murder, rape, arson, armed robbery, sexual assault, burglary, child molestation, and manslaughter are excluded. Program objectives and elements are described in greater detail in the *Program Brief on Treatment Alternatives to Street Crime.*

(A) *Critical elements:*

(*1*) Broad-based support by criminal justice agencies.

(*2*) Establishment of TASC advisory board.

(*3*) Establishment of administrative management unit with full-time director.

(*4*) Development of specific program eligibility criteria.

(*5*) Establishment of a process for screening potential clients and court liaison.

(*6*) Development of methods for assessing most appropriate treatment approaches.

(*7*) Documentation of the availability of community treatment programs and their willingness to accept TASC clients.

(*8*) Establishment of monitoring/tracking system.

(B) *Performance indicators:*

(*1*) Number of staff assigned to project.

(*2*) Number of persons screened.

(*3*) Number of clients accepted.

(*4*) Number of clients completing program.

(*5*) Number of client re-arrests while in the program.

(9) *Purpose:* Providing programs which alleviate prison and jail overcrowding and programs which identify existing state and Federal buildings suitable for prison use. (No specific program has been certified by the Bureau. Applicants may propose programs for approval in accordance with the provisions of § 33.41.)

(10)(i) *Purpose:* Provide training, management, and technical assistance to criminal justice personnel and determining appropriate prosecutorial and judicial personnel needs. (No specific program has been certified by the Bureau. Applicants may propose programs for approval in accordance with the provisions in § 33.41. Training, management, and technical assistance programs must be focused on one of the 17 other statutory purposes and be based on a needs assessment. Entry level or basic training is prohibited.)

(11) *Purpose:* Providing prison industry projects designed to place inmates in a realistic working and training environment in which they will be enabled to acquire marketable skills and to make financial payments for restitution to their victims, for support of their own familes, and for support of themselves in the institution. (No specific program has been certified by the Bureau. Applicants may propose programs for approval in accordance with the provisions of § 33.41.)

(12)(i) *Purpose:* Providing for operational information systems and workload management systems which improve the effectiveness of criminal justice agencies. All operational information system programs must be based on a needs assessment and requirements analysis and must include the definition of goals and objectives. In addition, they must assure that if public domain software is not available, any improvements to proprietary software will be placed in the public domain.

(ii) *Certified program: Prosecution Management Support System (PMSS).* This program is a specific application of the generic planning, implementation, and assessment requirements for effective system development and performance. PMSS uses automated data processing systems to support priority prosecution, improved conviction rates, speedy trial management, and improved efficiency/effectiveness of the

prosecutor's office. Model programs result in information systems which support prosecution activities such as identification of violent and career criminals, case and subpoena preparation and witness notification. Systems are used to monitor management decisions and prosecutor actions and to reduce case processing time and case preparation time. Program objectives and elements are described in greater detail in the *Program Brief on Prosecution Management Support System*. This Program Brief has been designed to provide guidance for all criminal justice information systems. The critical elements for PMSS are transferable to and are equally critical for other criminal justice information systems.

(A) *Critical elements:*

(*1*) Pre-program needs assessment.

(*2*) Implementation plan for fulfilling information needs and improving management and research capabilities.

(*3*) Process for monitoring management decisions and prosecutor actions.

(B) *Performance indicators:*

(*1*) Number of staff assigned to project.

(*2*) Case processing time.

(*3*) Conviction rates.

(13) *Purpose:* Providing programs of the same types as programs described in section 501(a)(4) of the Act which:

(i) The Director establishes under section 503(a) of the Justice Assistance Act as discretionary programs for financial assistance; or

(ii) Are innovative and have been deemed by the Director as likely to prove successful.

(14) *Purpose:* Implementing programs which address critical problems of crime, such as drug trafficking, which have been certified by the Director, after a process of consultation coordinated by the Assistant Attorney General, Office of Justice Programs, with the Director of the National Institute of Justice, Director of the Bureau of Justice Statistics, and Administrator of the Office of Juvenile Justice and Delinquency Prevention, as having proved successful.

(15)(i) *Purpose:* Providing programs which address the problem of serious offenses committed by juveniles.

(ii) *Certified program: Restitution by juvenile offenders:* This program promotes the use of restitution by juvenile offenders to make juveniles accountable to the victim and the community and to increase community confidence in the juvenile justice system. Juvenile restitution has been an effective alternative to incarceration in jurisdictions that have used it, reducing recidivism and providing benefits to victims. Assistance in the design and development of Juvenile Restitution Programs funded under this Program is available through the Restitution Education, Training and Technical Assistance (RESTTA) Program funded by the Office of Juvenile Justice and Delinquency Prevention. Program objectives and elements are described in greater detail in the *Program Brief on Restitution by Juvenile Offenders*.

(A) *Critical elements:*

(*1*) Legal authority to order restitution as a disposition for delinquent offenses.

(*2*) Commitment of the court and juvenile justice personnel.

(*3*) Pre-program planning to establish written policies and procedures, including:

(*i*) The stage of the system at which restitution will be initiated;

(*ii*) Specification of the target population; and

(*iii*) Establishment of procedures for determining the appropriate restitution to be rendered by the juvenile offender, enforcing restitution orders.

(*4*) Program management and administration should describe:

(*i*) Agency roles and responsibilities; and

(*ii*) Case management and tracking system for performance indicators.

(*5*) Community involvement in the program.

(B) *Performance indicators:*

(*1*) Personnel:

(*i*) Number employed full and part-time in restitution; and

(*ii*) Average restitution caseload per restitution/probation officer.

(*2*) Program participation:

(*i*) Number of juveniles by offense type;

(*ii*) Type and amount of restitution ordered; and

(*iii*) Number of victims (by type and amount of loss/injury) receiving restitution.

(*3*) Number/percent juveniles successfully completing their restitution orders.

(*4*) Total amount of restitution collected/completed.

(*5*) Number obtaining restitution-related employment/job services.

(*6*) Operational costs per case.

(*7*) Number of participants rearrested during the program.

(*8*) Number of participants incarcerated as a result of a rearrest or program failure.

(*9*) Number retaining restitution-related employment following completion.

(*10*) Victim satisfaction with the program.

(16) *Purpose:* Addressing the problem of crime committed against the elderly. (No specific program has been certified by the Bureau. Applicants may propose programs for approval in accordance with the provisions of § 33.41. Many of the programs identified under other purposes indirectly address the problem of crime against the elderly. Victim assistance programs and community crime prevention programs in particular often provide services that meet the special needs of the elderly.)

(17) *Purpose:* Provide training, technical assistance, and programs to assist state and local law enforcement authorities in rural areas in combating crime, with particular emphasis on violent crime, juvenile delinquency, and crime prevention. (No specific program has been certified by the Bureau. Applicants may propose programs for approval in accordance with the provisions of § 33.41. Many of the programs identified under other purposes are equally applicable to rural and urban areas.)

(18)(i) *Purpose:* Improve the operational effectiveness of law enforcement by integrating and maximizing the effectiveness of police field operations and the use of crime analysis techniques.

(ii) *Certified program: Integrated Criminal Apprehension Program (ICAP).* This program integrates and directs law enforcement activities relative to the prevention, detection and investigation of serious and violent crime. Components of model programs have included systematic data collection and analysis, crime analysis, structured planning and service delivery. The program emphasizes better use of existing resources and better management of the patrol operation and investigative process. It results in a process which increases arrests for serious crimes. Program objectives and elements are described in greater detail in the *Program Brief on the Integrated Criminal Apprehension Program.*

(A) *Critical elements:*

(*1*) Commitment of law enforcement agency top management to concept of manpower deployment based on crime analysis.

(*2*) Modification of agency data gathering methods to enhance planning and crime analysis.

(*3*) Establishment of crime analysis and planning function.

(*4*) Implementation of strategies, tactics and processes based on analysis that contribute to better management of criminal investigation and patrol.

(B) *Performance indicators:*

(*1*) Number of staff assigned to project.

(*2*) Types of strategies implementations e.g., directed patrol, crime analysis.

(*3*) Types of crimes targeted.

(*4*) Clearance rates (by arrest) for targeted crimes.

(*5*) Conviction rates for targeted crimes.

APPLICATION REQUIREMENTS

§ 33.40 General.

Sections 33.40 and 33.41 set forth the required programmatic content of block grant applications.

[50 FR 22990, May 30, 1985, as amended at 63 FR 50761, Sept. 23, 1998]

§ 33.41 Application content.

(a) *Format.* Applications from the states for criminal justice block grants must be submitted on Standard Form 424, Application for Federal Assistance, at a time specified by the Bureau of Justice Assistance. The Bureau will provide to the states an ''Application Kit'' that includes SF 424, a list of assurances that the applicant must agree to, a table of fund allocations, and additional guidance on how to prepare

and submit an application for criminal justice block grants.

(b) *Programs.* Applications must set forth programs and projects covering a two-year period which meet the purposes and criteria of section 403(a) of the Justice Assistance Act and these regulations. Applications must be amended annually, if new programs or projects are to be added or if the programs or projects contained in the approved application are not implemented. The application must designate which statutory purpose the program or project is intended to achieve, identify the state agency or unit of local government that will implement the program or project, and provide the estimated funding level for the program or project including the amount and source of cash matching funds. Section 405 of the Act.

(1) Section 33.32 of the regulations identifies specific programs which have been certified by the Bureau to meet the requirements of the Act. Approval will be given for implementation of any of these programs, if the applicant agrees to include all the critical elements in the program design. An applicant need only identify the program, which purpose it is intended to achieve, the state agency or unit of local government which will implement it, the funding level (including amount and source of match).

(2) Applicants may request approval of programs other than one of those certified by the Bureau. The application must contain, in addition to the information in § 33.41(b), a description of the program (including its critical elements and performance indicators) and evidence that it meets the criteria of offering a high probability of improving the functions of the criminal justice system. Evidence may include, but is not necessarily limited to, the results of any evaluations of previous tests or demonstrations of the program concept.

(3) Applicants may also request approval to expend up to 10 per centum of their funds for programs which the Director of the Bureau of Justice Assistance has established as priorities for discretionary grants under section 503 of the Act, or which are innovative programs that are deemed by the Director as likely to prove successful. For a program the same as a discretionary program, the applicant may identify it by name only and provide the information required under § 33.41(b)(1) of the regulations. For an innovative program, the applicant must describe the program (including its critical elements and performance indicators) and provide evidence that it is likely to prove successful.

(c) *Confidential information.* Applications which request funds for the STING Program should not state the location of the project. The application should only include the program designation, the funds involved, and the number of projects. The state agency or unit of local government implementing the project will be made known to the Bureau of Justice Assistance upon request or upon completion of the project.

(d) *Audit requirement.* Applications from the state must include the date of the State Office's last audit and the anticipated date of the next audit.

(e) *Civil rights contact.* Applications from the state must include the name of a civil rights contact person who has lead responsibility in insuring that all applicable civil rights requirements are met and who shall act as liaison in civil rights matters with the Office of Civil Rights Compliance of the Office of Justice Programs.

(f) *Application assurances.* Applications must include the following assurances:

(1) An assurance that, following the first fiscal year covered by an application and each fiscal year thereafter, the applicant will submit to the Bureau of Justice Assistance, where the applicant is a state or jurisdiction in a non-participating state, a performance report concerning the activities carried out, and an assessment of their impact; section 405(1) of the Act.

(2) A certification that Federal funds made available under this title will not be used to supplant state or local funds, but will be used to increase the amounts of such funds that would, in the absence of Federal funds, be made available for criminal justice activities; section 405(2) of the Act.

(3) An assurance that funds accounting, auditing, monitoring, and such

evaluation procedures as may be necessary to keep such records as the Bureau of Justice Assistance shall prescribe will be provided to assure fiscal control, proper management, and efficient disbursement of funds received under this title; section 405(3) of the Act.

(4) An assurance that the applicant shall maintain such data and information and submit such reports, in such form, at such times, and containing such information as the Bureau of Justice Assistance may require; section 405(4) of the Act.

(5) A certification that the programs meet all the requirements, that all the information contained in the application is correct, that there has been appropriate coordination with affected agencies, and that the applicant will comply with all provisions of the Justice Assistance Act 1984 and all other applicable Federal laws; section 405(5) of the Act.

(6) If the applicant is a state, an assurance that not more than 10 percent of the aggregate amount of funds received by a State under this part for a fiscal year will be distributed for programs and projects designated as intended to achieve the purpose specified in section 403(a)(13) of the Act; section 405(6) of the Act.

(7) An assurance that the state will take into account the needs and requests of units of general local government in the state and encourage local initiative in the development of programs which meet the purposes of the Act; section 405(7) of the Act.

(8) An assurance that the state application and any amendment to such application, has been submitted for review to the state legislature or its designated body (for purpose of this requirement, an application or amendment shall be deemed to be reviewed if the state legislature or its designated body does not review it within 60 days from the time it was submitted to it); section 405(8) of the Act.

(9) An assurance that the state application and any amendment thereto was made public before submission to the Bureau and, to the extent provided under state law or established procedure, an opportunity to comment thereon was provided to citizens and to neighborhood and community groups; section 405(9) of the Act.

(10) An assurance that the applicant will comply, and all its subgrantees and contractors will comply, with the non-discrimination requirements of the Justice Assistance Act; title VI of the Civil Rights Act of 1964; section 504 of the Rehabilitation Act of 1973, as amended; title IX of the Education Amendments of 1972; the Age Discrimination Act of 1975; and the Department of Justice Non-Discrimination regulations 28 CFR part 42, subparts C, D, E, and G;

(11) An assurance that in the event a Federal or state court or Federal or state administrative agency makes a finding of discrimination after a due process hearing on the grounds of race, color, religion, national orgin or sex against a recipient of funds, the recipient will forward a copy of the finding to the Office of Civil Rights Compliance (OCRC) of the Office of Justice Programs;

(12) An assurance that the applicant will require that every recipient required to formulate an Equal Employment Opportunity Program (EEOP) in accordance with 28 CFR 42.301 *et. seq.*, submit a certification to the state that it has a current EEOP on file which meets the requirements herein;

(13) An assurance that the applicant will provide an EEOP, if required to maintain one, where the application is for $500,000 or more and provide the EEOP of any subgrantee of $500,000 or more;

(14) An assurance that the applicant will comply with the provisions of the Office of Justice Programs ''Financial and Administrative Guide for Grants,'' M 7100.1;

(15) An assurance that the applicant will comply with the provisions of 28 CFR applicable to grants and cooperative agreements including part 18, Administrative Review Procedure; part 20, Criminal Justice Information Systems; part 22, Confidentiality of Identifiable Research and Statistical Information; part 23, Criminal Intelligence Systems Operating Policies; part 30, Intergovernmental Review of Department of Justice Programs and Activities; part 42; Non-discrimination Equal Employment Opportunity Policies and

Procedures; part 61, Procedures for Implementing the National Environmental Policy Act; and part 63, Floodplain Management and Wetland Protection Procedures.

(g) *Non-participating State.* If a state notifies the Bureau of Justice Assistance of its intent not to apply for block grant funds or fails to submit an application by the submission date, the Bureau will announce the availability of the block grant funds to local units of government in the non-participating state and will invite them to submit applications directly to the Bureau. A unit of local government receiving a block grant award directly from the Bureau assumes responsibility for all activities which would normally be the responsibility of the State Office.

ADDITIONAL REQUIREMENTS

§ 33.50 General financial requirements.

Grants funded under the criminal justice block grant program are governed by the provisions of the Office of Management and Budget (OMB) Circulars applicable to financial assistance. These Circulars along with additional information and guidance are contained in ''Financial and Administrative Guide for Grants,'' Guideline Manual 7100.1, available from the Office of Justice Programs. This Guideline Manual provides information on cost allowability, methods of payment, audit, accounting systems and financial records.

§ 33.51 Audit.

Pursuant to Office of Management and Budget Circular A–128 ''Audits of State and Local Governments,'' all grantees and subgrantees must provide for an independent audit of their activities on a periodic basis. For additional information on audit requirements, applicants should refer to the ''Financial and Administrative Guide for Grants,'' Guideline Manual 7100.1, Office of Justice Programs.

§ 33.52 Civil rights.

The Justice Assistance Act provides that ''no person in any state shall on the ground of race, color, religion, national origin, or sex be excluded from participation in, be denied the benefits of, or be subjected to discrimination under or denied employment in connection with any programs or activity funded in whole or in part with funds made available under this title.'' Section 809(c)(1) of the Act. Recipients of funds under the Act are also subject to the provisions of title VI of the Civil Rights Act of 1964; section 504 of the Rehabilitation Act of 1973, as amended; title IX of the Education Amendments of 1972; the Age Discrimination Act of 1975; and the Department of Justice Non-Discrimination regulations 28 CFR part 42, subparts C, D, E, and G.

§ 33.53 Participation by faith-based organizations.

The funds provided under this part shall be administered in compliance with the standards set forth in part 38 (Equal Treatment for Faith-based Organizations) of this chapter.

[Order No. 2703–2004, 69 FR 2838, Jan. 21, 2004]

SUBMISSION AND REVIEW OF APPLICATIONS

§ 33.60 General.

This subpart describes the process and criteria for Bureau of Justice Assistance review and approval of state applications and amendments.

§ 33.61 Review of State applications.

(a) *Review criteria.* The Act provides the basis for review and approval or disapproval of state applications and amendments in whole or in part. These are:

(1) Compliance with the statutory requirements of the Justice Assistance Act and the regulations of the Bureau of Justice Assistance. Section 406(a)(1) of the Act.

(2) Compliance with Executive Order 12372, ''Intergovernmental Review of Federal Programs.'' This program is covered by Executive Order 12372 and Department of Justice Implementing regulations 28 CFR part 30. States must submit block grant applications to the state ''Single Point of Contact'', if there is a ''Single Point of Contact'', and if this program has been selected for coverage by the state process, at the same time applications are submitted to the Bureau of Justice Assistance. State processes have 60 days

starting from the application submission date to comment on applications. Applicants should contact their state ''Single Point of Contact'' as soon as possible to alert them of the prospective application and receive instructions regarding the process.

(b) *Sixty day rule.* The Bureau of Justice Assistance shall approve or disapprove applications or amendments within sixty (60) days of official receipt. The application or amendment shall be considered approved unless the Bureau of Justice Assistance informs the applicant in writing of specific reasons for disapproval prior to the expiration of the 60-day period. Applications that are incomplete, as determined by the Bureau of Justice Assistance, shall not be considered officially received for purposes of the 60-day rule. Section 406(a)(2) of the Act.

(c) *Written notification and reasons for disapproval.* The Bureau of Justice Assistance shall notify the applicant in writing of the specific reasons for the disapproval of the application or amendment, in whole or in part. Section 406(a)(2) of the Act.

(d) *Affirmative finding.* The Bureau of Justice Assistance, prior to approval of the application or amendments, must make an affirmative finding in writing that the program or project has been reviewed in accordance with section 405 of the Act and is likely to contribute effectively to the achievement of the objectives of the Act. Section 406(a)(2) of the Act.

REPORTS

§ 33.70 Annual performance report.

(a) Section 405 of the Justice Assistance Act requires that the state, or a local unit of government in the case of a non-participating state, submit annually to the Bureau of Justice Assistance a performance report (including an assessment of impact) concerning the activities carried out under the grant. These performance reports will provide the basis for the annual report from the Bureau to the President and the Congress as required by section 810 of the Act.

(b) The performance report will describe the activities undertaken and results achieved of each project funded. It will include the data gathered on the approved performance indicators. The report is due to the Bureau by no later than December 31 and must cover projects for the prior Federal fiscal year that have either been completed or been in operation for 12 months or more. The first performance report shall be due to the Bureau by December 31, 1986.

(c) In order to help states and localities prepare these performance reports, the Bureau will provide data collection forms and instructions that will enable information to be gathered and reported in the most convenient manner possible. These forms and instructions will be developed in consultation with states and localities.

§ 33.71 Initial project report.

States are required to provide to the Bureau of Justice Assistance within 30 days after the award of a subgrant, an initial project report which provides information on the subgrant recipient (name, address, contact person), the subgrant period, the type of award (new or renewal), the subgrant funding level, and the general target area (geographic area, population group) to be impacted. The Bureau of Justice Assistance will provide a form to assist the states in reporting this information.

SUSPENSION OF FUNDING

§ 33.80 Suspension of funding.

The Bureau of Justice Assistance shall, after reasonable notice and opportunity for a hearing on the record, terminate or suspend funding for a state that implements programs or projects which fail to conform to the requirements or statutory objectives of the Act, or that fails to comply substantially with the Justice Assistance Act, these regulations or the terms and conditions of its grant award. Hearing and appeal procedures are set forth in Department of Justice regulations 28 CFR part 18.

Subpart B—Bulletproof Vest Partnership Grant Program Applying for the Program

SOURCE: 63 FR 50761, Sept. 23, 1998, unless otherwise noted.

§ 33.100 Definitions.

The Bureau of Justice Assistance (BJA) will use the following definitions in providing guidance to your jurisdiction regarding the purchase of armor vests under the Bulletproof Vest Partnership Grant Act of 1998—

(a) The term *program* will refer to the activities administered by BJA to implement the Bulletproof Vest Partnership Grant Act of 1998;

(b) The terms *you* and *your* will refer to a jurisdiction applying to this program;

(c) The term *armor vest* under this program will mean a vest that has met the performance standards established by the National Law Enforcement and Corrections Technology Center of the National Institute of Justice (NIJ) as published in NIJ Standard 0101.03, or any formal revision of this standard;

(d) The term *State* will be used to mean each of the 50 States, as well as the District of Columbia, the Commonwealth of Puerto Rico, the United States Virgin Islands, American Samoa, Guam, and the Northern Mariana Islands;

(e) The term *unit of local government* will mean a county, municipality, town, township, village, parish, borough, or other unit of general government below the State level;

(f) The term *Indian tribe* has the same meaning as in section 4(e) of the Indian Self-Determination and Education Assistance Act (25 U.S.C. 450b(e)) which defines Indian tribe as meaning any Indian tribe, band, nation, or other organized group or community, including any Alaska Native village or regional or village corporation as defined in or established pursuant to the Alaska Native Claims Settlement Act (85 Stat. 688) (43 U.S.C. 1601 *et seq.*);

(g) The term *law enforcement officer* will mean any officer, agent, or employee of a State, unit of local government, or Indian tribe authorized by law or by a government agency to engage in or supervise the prevention, detection, or investigation of any violation of criminal law, or authorized by law to supervise sentenced criminal offenders; and

(h) The term *mandatory wear policy* will mean a policy formally adopted by a jurisdiction that requires a law enforcement officer to wear an armor vest throughout each duty shift whenever feasible.

§ 33.101 Standards and requirements.

This program has been developed to assist your jurisdiction with selecting and obtaining high quality armor vests in the quickest and easiest manner available. The program will assist your jurisdiction in determining which type of armor vest will best suit your jurisdiction's needs, and will ensure that each armor vest obtained through this program meets the NIJ standard.

(a) Your jurisdiction will be provided with model numbers for armor vests that meet the NIJ Standard in order to ensure your jurisdiction receives the approved vests in the quickest manner;

(b) If you are a State or unit of local government, your jurisdiction will be required to partner with the Federal government in this program by paying at least 50 percent of the total cost for each armor vest purchased under this program. These matching funds may not be obtained from another Federal source;

(c) If you are an Indian tribe, your jurisdiction will be required to partner with the Federal government in this program by paying at least 50 percent of the total cost for each armor vest purchased under this program. Total cost will include the cost of the armor vests, taxes, shipping, and handling. You may use any funds appropriated by Congress toward the performing of law enforcement functions on your lands as matching funds for this program or any funds appropriated by Congress for the activities of any agency of your tribal government;

(d) BJA will conduct outreach to ensure that at least half of all funds available for armor vest purchases be given to units of local government with fewer than 100,000 residents;

(e) Each State government is responsible for coordinating the needs of law enforcement officers across agencies

within its own jurisdiction and making one application per fiscal year;

(f) Each unit of local government and Indian tribe is responsible for coordinating the needs of law enforcement officers across agencies within its own jurisdiction and making one application per fiscal year;

(g) Your individual jurisdiction may not receive more than 5 percent of the total program funds in any fiscal year;

(h) The 50 States, the District of Columbia, and the Commonwealth of Puerto Rico, together with their units of local government, each may not receive less than one half percent and not more than 20 percent of the total program funds during a fiscal year;

(i) The United States Virgin Islands, American Samoa, Guam, and the Northern Mariana Islands, together with their units of local government, each may not receive less than one fourth percent and not more than 20 percent of the total program funds during a fiscal year; and

(j) If your jurisdiction also is applying for a Local Law Enforcement Block Grant (LLEBG), then you will be asked to certify:

(1) Whether LLEBG funds will be used to purchase vests; and, if not,

(2) Whether your jurisdiction considered using LLEBG funds to purchase vests, but has concluded it will not use its LLEBG funds in that manner.

§ 33.102 Preferences.

BJA may give preferential consideration, at its discretion, to an application from a jurisdiction that—

(a) Has the greatest need for armor vests based on the percentage of law enforcement officers who do not have access to an armor vest;

(b) Has, or will institute, a mandatory wear policy that requires on-duty law enforcement officers to wear armor vests whenever feasible; and

(c) Has a violent crime rate at or above the national average as determined by the Federal Bureau of Investigation; or

(d) Has not received a Local Law Enforcement Block Grant.

§ 33.103 How to apply.

BJA will issue Guidelines regarding the process to follow in applying to the program for grants of armor vests.

PART 34—OJJDP COMPETITION AND PEER REVIEW PROCEDURES

Subpart A—Competition

Sec.
34.1 Purpose and applicability.
34.2 Exceptions to applicability.
34.3 Selection criteria.
34.4 Additional competitive application requirements and procedures.

Subpart B—Peer Review

34.100 Purpose and applicability.
34.101 Exceptions to applicability.
34.102 Peer review procedures.
34.103 Definition.
34.104 Use of peer review.
34.105 Peer review methods.
34.106 Number of peer reviewers.
34.107 Use of Department of Justice staff.
34.108 Selection of reviewers.
34.109 Qualifications of peer reviewers.
34.110 Management of peer reviews.
34.111 Compensation.

Subpart C—Emergency Expedited Review [Reserved]

AUTHORITY: Juvenile Justice and Delinquency Prevention Act of 1974, as amended, (42 U.S.C. 5601 *et seq.*).

SOURCE: 55 FR 39234, Sept. 25, 1990, unless otherwise noted.

Subpart A—Competition

§ 34.1 Purpose and applicability.

(a) This subpart of the regulation implements section 262(d)(1) (A) and (B) of the Juvenile Justice and Delinquency Prevention Act of 1974, as amended (42 U.S.C. 5601 *et seq.*). This provision requires that project applications, selected for categorical assistance awards under part C—National Programs shall be selected through a competitive process established by rule by the Administrator, OJJDP. The statute specifies that this process must include announcement in the FEDERAL REGISTER of the availability of funds for assistance programs, the general criteria applicable to the selection of applications for assistance, and a description

of the procedures applicable to the submission and review of assistance applications.

(b) This subpart of the regulation applies to all grant, cooperative agreement, and other assistance awards selected by the Administrator, OJJDP, or the Administrator's designee, under part C—National Programs, of the Juvenile Justice and Delinquency Prevention Act of 1974, as amended, except as provided in the exceptions to applicability set forth below.

§ 34.2 Exceptions to applicability.

The following are assistance and procurement contract award situations that OJJDP considers to be outside the scope of the section 262(d)(1) competition requirement:

(a) Assistance awards to initially fund or continue projects if the Administrator has made a written determination that the proposed program is not within the scope of any program announcement expected to be issued, is otherwise eligible for an award, and the proposed project is of such outstanding merit, as determined through peer review under subpart B of this part, that an assistance award without competition is justified (section 262(d)(1)(B)(i));

(b) Assistance awards to initially fund or continue training services to be funded under part C, section 244, if the Administrator has made a written determination that the applicant is uniquely qualified to provide proposed training services and other qualified sources are not capable of providing such services (section 262(d)(1)(B)(ii));

(c) Assistance awards of funds transferred to OJJDP by another Federal agency to augment authorized juvenile justice programs, projects, or purposes;

(d) Funds transferred to other Federal agencies by OJJDP for program purposes as authorized by law;

(e) Procurement contract awards which are subject to applicable Federal laws and regulations governing the procurement of goods and services for the benefit and use of the government;

(f) Assistance awards from the 5% ''set aside'' of Special Emphasis funds under section 261(e); and

(g) Assistance awards under section 241(f).

§ 34.3 Selection criteria.

(a) All individual project applications will, at a minimum, be subject to review based on the extent to which they meet the following general selection criteria:

(1) The problem to be addressed by the project is clearly stated;

(2) The objectives of the proposed project are clearly defined;

(3) The project design is sound and contains program elements directly linked to the achievement of project objectives;

(4) The project management structure is adequate to the successful conduct of the project;

(5) Organizational capability is demonstrated at a level sufficient to successfully support the project; and

(6) Budgeted costs are reasonable, allowable and cost effective for the activities proposed to be undertaken.

(b) The general selection criteria set forth under paragraph (a) of this section, may be supplemented for each announced competitive program by program-specific selection criteria for the particular part C program. Such announcements may also modify the general selection criteria to provide greater specificity or otherwise improve their applicability to a given program. The relative weight (point value) for each selection criterion will be specified in the program announcement.

§ 34.4 Additional competitive application requirements and procedures.

(a) *Applications for grants.* Any applicant eligible for assistance may submit on or before such submission deadline date or dates as the Administrator may establish in program announcements, an application containing such pertinent information and in accordance with the forms and instructions as prescribed therein and any additional forms and instructions as may be specified by the Administrator. Such application shall be executed by the applicant or an official or representative of the applicant duly authorized to make such application and to assume on behalf of the applicant the obligations imposed by law, applicable regulations, and any additional terms and conditions of the assistance award. The Administrator may require any applicant

eligible for assistance under this subpart to submit a preliminary proposal for review and approval prior to the acceptance of an application.

(b) *Cooperative arrangements.* (1) When specified in program announcements, eligible parties may enter into cooperative arrangements with other eligible parties, including those in another State, and submit joint applications for assistance.

(2) A joint application made by two or more applicants for assistance may have separate budgets corresponding to the programs, services and activities performed by each of the joint applicants or may have a combined budget. If joint applications present separate budgets, the Administrator may make separate awards, or may award a single assistance award authorizing separate amounts for each of the joint applicants.

(c) *Evaluation of applications submitted under part C of the Act.* All applications filed in accordance with § 34.1 of this subpart for assistance with part C—National Programs funds shall be evaluated by the Administrator through OJJDP and other DOJ personnel (internal review) and by such experts or consultants required for this purpose that the Administrator determines are specially qualified in the particular part C program area covered by the announced program (peer review). Supplementary application review procedures, in addition to internal review and peer review, may be used for each competitive part C program announcement. The program announcement shall clearly state the application review procedures (peer review and other) to be used for each competitive part C program announcement.

(d) *Applicant's performance on prior award.* When the applicant has previously received an award from OJJDP or another Federal agency, the applicant's noncompliance with requirements applicable to such prior award as reflected in past written evaluation reports and memoranda on performance, and the completeness of required submissions, may be considered by the Administrator. In any case where the Administrator proposes to deny assistance based upon the applicant's noncompliance with requirements applicable to a prior award, the Administrator shall do so only after affording the applicant reasonable notice and an opportunity to rebut the proposed basis for denial of assistance.

(e) *Applicant's fiscal integrity.* Applicants must meet OJP standard of fiscal integrity (see OJP M 7100.1C, par. 24 and OJP HB 4500.2B, par. 48 a and b).

(f) *Disposition of applications.* On the basis of competition and applicable review procedures completed pursuant to this regulation, the Administrator will either:

(1) Approve the application for funding, in whole or in part, for such amount of funds, and subject to such conditions as the Administrator deems necessary or desirable for the completion of the approved project;

(2) Determine that the application is of acceptable quality for funding, in that it meets minimum criteria, but that the application must be disapproved for funding because it did not rank sufficiently high in relation to other applications approved for funding to qualify for an award based on the level of funding allocated to the program; or

(3) Reject the application for failure to meet the applicable selection criteria at a sufficiently high level to justify an award of funds, or for other reason which the Administrator deems compelling, as provided in the documentation of the funding decision.

(g) *Notification of disposition.* The Administrator will notify the applicant in writing of the disposition of the application. A signed Grant/Cooperative Agreement form will be issued to notify the applicant of an approved project application.

(h) *Effective date of approved grant.* Federal financial assistance is normally available only with respect to obligations incurred subsequent to the effective date of an approved assistance project. The effective date of the project will be set forth in the Grant/Cooperative Agreement form. Recipients may be reimbursed for costs resulting from obligations incurred before the effective date of the assistance award, if such costs are authorized by the Administrator in the notification of assistance award or subsequently in

writing, and otherwise would be allowable as costs of the assistance award under applicable guidelines, regulations, and award terms and conditions.

Subpart B—Peer Review

§ 34.100 Purpose and applicability.

(a) This subpart of the regulation implements section 262(d)(2) of the Juvenile Justice and Delinquency Prevention Act of 1974, as amended. This provision requires that projects funded as new or continuation programs selected for categorical assistance awards under part C—National Programs shall be reviewed before selection and thereafter as appropriate through a formal peer review process. Such process must utilize experts (other than officials and employees of the Department of Justice) in fields related to the technical and/or subject matter of the proposed program.

(b) This subpart of the regulation applies to all applications for grants, cooperative agreements, and other assistance awards selected by the Administrator, OJJDP, for funding under part C—National Programs that are being considered for competitive and noncompetitive (including continuation) awards to begin new project periods, except as provided in the exceptions to applicability set forth below.

§ 34.101 Exceptions to applicability.

The assistance and procurement contract situations specified in § 34.2 (c), (d), (e), (f), and (g) of subpart A of this part are considered by OJJDP to be outside the scope of the section 262(d) peer review requirement as set forth in this subpart.

§ 34.102 Peer review procedures.

The OJJDP peer review process is contained in an OJJDP ''Peer Review Guideline,'' developed in consultation with the Directors and other appropriate officials of the National Science Foundation and the National Institute of Mental Health. In addition to specifying substantive and procedural matters related to the peer review process, the ''Guideline'' addresses such issues as standards of conduct, conflict of interest, compensation of peer reviewers, etc. The ''Guideline'' describes a process that evolves in accordance with experience and opportunities to effect improvements. The peer review process for all part C—National Programs assistance awards subject to this regulation will be conducted in a manner consistent with this subpart as implemented in the ''Peer Review Guideline''.

§ 34.103 Definition.

Peer review means the technical and programmatic evaluation by a group of experts (other than officers and employees of the Department of Justice) qualified by training and experience to give expert advice, based on selection criteria established under subpart A of this part, in a program announcement, or as established by the Administrator, on the technical and programmatic merit of assistance.

§ 34.104 Use of peer review.

(a) *Peer review for competitive and noncompetitive applications.* (1) For competitive applications, each program announcement will indicate the program specific peer review procedures and selection criteria to be followed in peer review for that program. In the case of competitive programs for which a large number of applications is expected, preapplications (concept papers) may be required. Preapplications will be reviewed by qualified OJJDP staff to eliminate those pre-applications which fail to meet minimum program requirements, as specified in a program announcement, or clearly lack sufficient merit to qualify as potential candidates for funding consideration. The Administrator may subject both preapplications and formal applications to the peer review process.

(2) For noncompetitive applications, the general selection criteria set forth under subpart A of this part may be supplemented by program specific selection criteria for the particular part C program. Applicants for noncompetitive continuation awards will be fully informed of any additional specific criteria in writing.

(b) When formal applications are required in response to a program announcement, an initial review will be conducted by qualified OJJDP staff, in order to eliminate from peer review

consideration applications which do not meet minimum program requirements. Such requirements will be specified in the program announcement. Applications determined to be qualified and eligible for further consideration will then be considered under the peer review process.

(c) Ratings will be in the form of numerical scores assigned by individual peer reviewers as illustrated in the OJJDP ''Peer Review Guideline.'' The results of peer review under a competitive program will be a relative aggregate ranking of applications in the form of ''Summary Ratings.'' The results of peer review for a noncompetitive new or continuation project will be in the form of numerical scores based on criteria established by the Administrator.

(d) Peer review recommendations, in conjunction with the results of internal review and any necessary supplementary review, will assist the Administrator's consideration of competitive, noncompetitive, applications and selection of applications for funding.

(e) Peer review recommendations are advisory only and are binding on the Administrator only as provided by section 262(d)(B)(i) for noncompetitive assistance awards to programs determined through peer review not to be of such outstanding merit that an award without competition is justified. In such case, the determination of whether to issue a competitive program announcement will be subject to the exercise of the Administrator's discretion.

§ 34.105 Peer review methods.

(a) For both competitive and noncompetitive applications, peer review will normally consist of written comments provided in response to the general selection criteria established under subpart A of this part and any program specific selection criteria identified in the program announcement or otherwise established by the Administrator, together with the assignment of numerical values. Peer review may be conducted at meetings with peer reviewers held under OJJDP oversight, through mail reviews, or a combination of both. When advisable, site visits may also be employed. The method of peer review anticipated for each announced competitive program, including the evaluation criteria to be used by peer reviewers, will be specified in each program announcement.

(b) When peer review is conducted through meetings, peer review panelists will be gathered together for instruction by OJJDP, including review of the OJJDP ''Peer Review Guideline''. OJJDP will oversee the conduct of individual and group review sessions, as appropriate. When time or other factors preclude the convening of a peer review panel, mail reviews will be used. For competitive programs, mail reviews will be used only where the Administrator makes a written determination of necessity.

§ 34.106 Number of peer reviewers.

The number of peer reviewers will vary by program (as affected by the volume of applications anticipated or received). OJJDP will select a minimum of three peer reviewers (qualified individuals who are not officers or employees of the Department of Justice) for each program or project review in order to ensure a diversity of backgrounds and perspectives. In no case will fewer than three reviews be made of each individual application.

§ 34.107 Use of Department of Justice staff.

OJJDP will use qualified OJJDP and other DOJ staff as internal reviewers. Internal reviewers determine applicant compliance with basic program and statutory requirements, review the results of peer review, and provide overall program evaluation and recommendations to the Administrator.

§ 34.108 Selection of reviewers.

The Program Manager, through the Director of the OJJDP program division with responsibility for a particular program or project will propose a selection of peer reviewers from an extensive and varied pool of juvenile justice and delinquency prevention experts for approval by the Administrator. The selection process for peer reviewers is detailed in the OJJDP ''Peer Review Guideline''.

§ 34.109 Qualifications of peer reviewers.

The general reviewer qualification criteria to be used in the selection of peer reviewers are:

(a) Generalized knowledge of juvenile justice or related fields; and

(b) Specialized knowledge in areas or disciplines addressed by the applications to be reviewed under a particular program.

(c) Must not have a conflict of interest (see OJP M7100.1C, par. 94).

Additional details concerning peer reviewer qualifications are provided in the OJJDP ''Peer Review Guideline''.

§ 34.110 Management of peer reviews.

A technical support contractor may assist in managing the peer review process.

§ 34.111 Compensation.

All peer reviewers will be eligible to be paid according to applicable regulations and policies concerning consulting fees and reimbursement for expenses. Detailed information is provided in the OJJDP ''Peer Review Guideline''.

Subpart C—Emergency Expedited Review [Reserved]

PART 35—NONDISCRIMINATION ON THE BASIS OF DISABILITY IN STATE AND LOCAL GOVERNMENT SERVICES

Subpart A—General

Sec.
35.101 Purpose.
35.102 Application.
35.103 Relationship to other laws.
35.104 Definitions.
35.105 Self-evaluation.
35.106 Notice.
35.107 Designation of responsible employee and adoption of grievance procedures.
35.108–35.129 [Reserved]

Subpart B—General Requirements

35.130 General prohibitions against discrimination.
35.131 Illegal use of drugs.
35.132 Smoking.
35.133 Maintenance of accessible features.
35.134 Retaliation or coercion.
35.135 Personal devices and services.
35.136–35.139 [Reserved]

Subpart C—Employment

35.140 Employment discrimination prohibited.
35.141–35.148 [Reserved]

Subpart D—Program Accessibility

35.149 Discrimination prohibited.
35.150 Existing facilities.
35.151 New construction and alterations.
35.152–35.159 [Reserved]

Subpart E—Communications

35.160 General.
35.161 Telecommunication devices for the deaf (TDD's).
35.162 Telephone emergency services.
35.163 Information and signage.
35.164 Duties.
35.165–35.169 [Reserved]

Subpart F—Compliance Procedures

35.170 Complaints.
35.171 Acceptance of complaints.
35.172 Resolution of complaints.
35.173 Voluntary compliance agreements.
35.174 Referral.
35.175 Attorney's fees.
35.176 Alternative means of dispute resolution.
35.177 Effect of unavailability of technical assistance.
35.178 State immunity.
35.179–35.189 [Reserved]

Subpart G—Designated Agencies

35.190 Designated agencies.
35.191–35.999 [Reserved]
APPENDIX A TO PART 35—PREAMBLE TO REGULATION ON NONDISCRIMINATION ON THE BASIS OF DISABILITY IN STATE AND LOCAL GOVERNMENT SERVICES (PUBLISHED JULY 26, 1991)

AUTHORITY: 5 U.S.C. 301; 28 U.S.C. 509, 510; Title II, Pub. L. 101–336 (42 U.S.C. 12134).

SOURCE: Order No. 1512–91, 56 FR 35716, July 26, 1991, unless otherwise noted.

Subpart A—General

§ 35.101 Purpose.

The purpose of this part is to effectuate subtitle A of title II of the Americans with Disabilities Act of 1990 (42 U.S.C. 12131), which prohibits discrimination on the basis of disability by public entities.

§ 35.102 Application.

(a) Except as provided in paragraph (b) of this section, this part applies to all services, programs, and activities provided or made available by public entities.

(b) To the extent that public transportation services, programs, and activities of public entities are covered by subtitle B of title II of the ADA (42 U.S.C. 12141), they are not subject to the requirements of this part.

§ 35.103 Relationship to other laws.

(a) *Rule of interpretation.* Except as otherwise provided in this part, this part shall not be construed to apply a lesser standard than the standards applied under title V of the Rehabilitation Act of 1973 (29 U.S.C. 791) or the regulations issued by Federal agencies pursuant to that title.

(b) *Other laws.* This part does not invalidate or limit the remedies, rights, and procedures of any other Federal laws, or State or local laws (including State common law) that provide greater or equal protection for the rights of individuals with disabilities or individuals associated with them.

§ 35.104 Definitions.

For purposes of this part, the term—

Act means the Americans with Disabilities Act (Pub. L. 101–336, 104 Stat. 327, 42 U.S.C. 12101–12213 and 47 U.S.C. 225 and 611).

Assistant Attorney General means the Assistant Attorney General, Civil Rights Division, United States Department of Justice.

Auxiliary aids and services includes—

(1) Qualified interpreters, notetakers, transcription services, written materials, telephone handset amplifiers, assistive listening devices, assistive listening systems, telephones compatible with hearing aids, closed caption decoders, open and closed captioning, telecommunications devices for deaf persons (TDD's), videotext displays, or other effective methods of making aurally delivered materials available to individuals with hearing impairments;

(2) Qualified readers, taped texts, audio recordings, Brailled materials, large print materials, or other effective methods of making visually delivered materials available to individuals with visual impairments;

(3) Acquisition or modification of equipment or devices; and

(4) Other similar services and actions.

Complete complaint means a written statement that contains the complainant's name and address and describes the public entity's alleged discriminatory action in sufficient detail to inform the agency of the nature and date of the alleged violation of this part. It shall be signed by the complainant or by someone authorized to do so on his or her behalf. Complaints filed on behalf of classes or third parties shall describe or identify (by name, if possible) the alleged victims of discrimination.

Current illegal use of drugs means illegal use of drugs that occurred recently enough to justify a reasonable belief that a person's drug use is current or that continuing use is a real and ongoing problem.

Designated agency means the Federal agency designated under subpart G of this part to oversee compliance activities under this part for particular components of State and local governments.

Disability means, with respect to an individual, a physical or mental impairment that substantially limits one or more of the major life activities of such individual; a record of such an impairment; or being regarded as having such an impairment.

(1)(i) The phrase *physical or mental impairment* means—

(A) Any physiological disorder or condition, cosmetic disfigurement, or anatomical loss affecting one or more of the following body systems: Neurological, musculoskeletal, special sense organs, respiratory (including speech organs), cardiovascular, reproductive, digestive, genitourinary, hemic and lymphatic, skin, and endocrine;

(B) Any mental or psychological disorder such as mental retardation, organic brain syndrome, emotional or mental illness, and specific learning disabilities.

(ii) The phrase *physical or mental impairment* includes, but is not limited to, such contagious and noncontagious diseases and conditions as orthopedic, visual, speech and hearing impairments,

cerebral palsy, epilepsy, muscular dystrophy, multiple sclerosis, cancer, heart disease, diabetes, mental retardation, emotional illness, specific learning disabilities, HIV disease (whether symptomatic or asymptomatic), tuberculosis, drug addiction, and alcoholism.

(iii) The phrase *physical or mental impairment* does not include homosexuality or bisexuality.

(2) The phrase *major life activities* means functions such as caring for one's self, performing manual tasks, walking, seeing, hearing, speaking, breathing, learning, and working.

(3) The phrase *has a record of such an impairment* means has a history of, or has been misclassified as having, a mental or physical impairment that substantially limits one or more major life activities.

(4) The phrase *is regarded as having an impairment means*—

(i) Has a physical or mental impairment that does not substantially limit major life activities but that is treated by a public entity as constituting such a limitation;

(ii) Has a physical or mental impairment that substantially limits major life activities only as a result of the attitudes of others toward such impairment; or

(iii) Has none of the impairments defined in paragraph (1) of this definition but is treated by a public entity as having such an impairment.

(5) The term *disability* does not include—

(i) Transvestism, transsexualism, pedophilia, exhibitionism, voyeurism, gender identity disorders not resulting from physical impairments, or other sexual behavior disorders;

(ii) Compulsive gambling, kleptomania, or pyromania; or

(iii) Psychoactive substance use disorders resulting from current illegal use of drugs.

Drug means a controlled substance, as defined in schedules I through V of section 202 of the Controlled Substances Act (21 U.S.C. 812).

Facility means all or any portion of buildings, structures, sites, complexes, equipment, rolling stock or other conveyances, roads, walks, passageways, parking lots, or other real or personal property, including the site where the building, property, structure, or equipment is located.

Historic preservation programs means programs conducted by a public entity that have preservation of historic properties as a primary purpose.

Historic Properties means those properties that are listed or eligible for listing in the National Register of Historic Places or properties designated as historic under State or local law.

Illegal use of drugs means the use of one or more drugs, the possession or distribution of which is unlawful under the Controlled Substances Act (21 U.S.C. 812). The term *illegal use of drugs* does not include the use of a drug taken under supervision by a licensed health care professional, or other uses authorized by the Controlled Substances Act or other provisions of Federal law.

Individual with a disability means a person who has a disability. The term *individual with a disability* does not include an individual who is currently engaging in the illegal use of drugs, when the public entity acts on the basis of such use.

Public entity means—

(1) Any State or local government;

(2) Any department, agency, special purpose district, or other instrumentality of a State or States or local government; and

(3) The National Railroad Passenger Corporation, and any commuter authority (as defined in section 103(8) of the Rail Passenger Service Act).

Qualified individual with a disability means an individual with a disability who, with or without reasonable modifications to rules, policies, or practices, the removal of architectural, communication, or transportation barriers, or the provision of auxiliary aids and services, meets the essential eligibility requirements for the receipt of services or the participation in programs or activities provided by a public entity.

Qualified interpreter means an interpreter who is able to interpret effectively, accurately, and impartially both receptively and expressively, using any necessary specialized vocabulary.

Section 504 means section 504 of the Rehabilitation Act of 1973 (Pub. L. 93–112, 87 Stat. 394 (29 U.S.C. 794)), as amended.

State means each of the several States, the District of Columbia, the Commonwealth of Puerto Rico, Guam, American Samoa, the Virgin Islands, the Trust Territory of the Pacific Islands, and the Commonwealth of the Northern Mariana Islands.

§ 35.105 Self-evaluation.

(a) A public entity shall, within one year of the effective date of this part, evaluate its current services, policies, and practices, and the effects thereof, that do not or may not meet the requirements of this part and, to the extent modification of any such services, policies, and practices is required, the public entity shall proceed to make the necessary modifications.

(b) A public entity shall provide an opportunity to interested persons, including individuals with disabilities or organizations representing individuals with disabilities, to participate in the self-evaluation process by submitting comments.

(c) A public entity that employs 50 or more persons shall, for at least three years following completion of the self-evaluation, maintain on file and make available for public inspection:

(1) A list of the interested persons consulted;

(2) A description of areas examined and any problems identified; and

(3) A description of any modifications made.

(d) If a public entity has already complied with the self-evaluation requirement of a regulation implementing section 504 of the Rehabilitation Act of 1973, then the requirements of this section shall apply only to those policies and practices that were not included in the previous self-evaluation.

(Approved by the Office of Management and Budget under control number 1190–0006)

[56 FR 35716, July 26, 1991, as amended by Order No. 1694–93, 58 FR 17521, Apr. 5, 1993]

§ 35.106 Notice.

A public entity shall make available to applicants, participants, beneficiaries, and other interested persons information regarding the provisions of this part and its applicability to the services, programs, or activities of the public entity, and make such information available to them in such manner as the head of the entity finds necessary to apprise such persons of the protections against discrimination assured them by the Act and this part.

§ 35.107 Designation of responsible employee and adoption of grievance procedures.

(a) *Designation of responsible employee.* A public entity that employs 50 or more persons shall designate at least one employee to coordinate its efforts to comply with and carry out its responsibilities under this part, including any investigation of any complaint communicated to it alleging its noncompliance with this part or alleging any actions that would be prohibited by this part. The public entity shall make available to all interested individuals the name, office address, and telephone number of the employee or employees designated pursuant to this paragraph.

(b) *Complaint procedure.* A public entity that employs 50 or more persons shall adopt and publish grievance procedures providing for prompt and equitable resolution of complaints alleging any action that would be prohibited by this part.

§§ 35.108–35.129 [Reserved]

Subpart B—General Requirements

§ 35.130 General prohibitions against discrimination.

(a) No qualified individual with a disability shall, on the basis of disability, be excluded from participation in or be denied the benefits of the services, programs, or activities of a public entity, or be subjected to discrimination by any public entity.

(b)(1) A public entity, in providing any aid, benefit, or service, may not, directly or through contractual, licensing, or other arrangements, on the basis of disability—

(i) Deny a qualified individual with a disability the opportunity to participate in or benefit from the aid, benefit, or service;

(ii) Afford a qualified individual with a disability an opportunity to participate in or benefit from the aid, benefit, or service that is not equal to that afforded others;

(iii) Provide a qualified individual with a disability with an aid, benefit, or service that is not as effective in affording equal opportunity to obtain the same result, to gain the same benefit, or to reach the same level of achievement as that provided to others;

(iv) Provide different or separate aids, benefits, or services to individuals with disabilities or to any class of individuals with disabilities than is provided to others unless such action is necessary to provide qualified individuals with disabilities with aids, benefits, or services that are as effective as those provided to others;

(v) Aid or perpetuate discrimination against a qualified individual with a disability by providing significant assistance to an agency, organization, or person that discriminates on the basis of disability in providing any aid, benefit, or service to beneficiaries of the public entity's program;

(vi) Deny a qualified individual with a disability the opportunity to participate as a member of planning or advisory boards;

(vii) Otherwise limit a qualified individual with a disability in the enjoyment of any right, privilege, advantage, or opportunity enjoyed by others receiving the aid, benefit, or service.

(2) A public entity may not deny a qualified individual with a disability the opportunity to participate in services, programs, or activities that are not separate or different, despite the existence of permissibly separate or different programs or activities.

(3) A public entity may not, directly or through contractual or other arrangements, utilize criteria or methods of administration:

(i) That have the effect of subjecting qualified individuals with disabilities to discrimination on the basis of disability;

(ii) That have the purpose or effect of defeating or substantially impairing accomplishment of the objectives of the public entity's program with respect to individuals with disabilities; or

(iii) That perpetuate the discrimination of another public entity if both public entities are subject to common administrative control or are agencies of the same State.

(4) A public entity may not, in determining the site or location of a facility, make selections—

(i) That have the effect of excluding individuals with disabilities from, denying them the benefits of, or otherwise subjecting them to discrimination; or

(ii) That have the purpose or effect of defeating or substantially impairing the accomplishment of the objectives of the service, program, or activity with respect to individuals with disabilities.

(5) A public entity, in the selection of procurement contractors, may not use criteria that subject qualified individuals with disabilities to discrimination on the basis of disability.

(6) A public entity may not administer a licensing or certification program in a manner that subjects qualified individuals with disabilities to discrimination on the basis of disability, nor may a public entity establish requirements for the programs or activities of licensees or certified entities that subject qualified individuals with disabilities to discrimination on the basis of disability. The programs or activities of entities that are licensed or certified by a public entity are not, themselves, covered by this part.

(7) A public entity shall make reasonable modifications in policies, practices, or procedures when the modifications are necessary to avoid discrimination on the basis of disability, unless the public entity can demonstrate that making the modifications would fundamentally alter the nature of the service, program, or activity.

(8) A public entity shall not impose or apply eligibility criteria that screen out or tend to screen out an individual with a disability or any class of individuals with disabilities from fully and equally enjoying any service, program, or activity, unless such criteria can be shown to be necessary for the provision of the service, program, or activity being offered.

(c) Nothing in this part prohibits a public entity from providing benefits,

services, or advantages to individuals with disabilities, or to a particular class of individuals with disabilities beyond those required by this part.

(d) A public entity shall administer services, programs, and activities in the most integrated setting appropriate to the needs of qualified individuals with disabilities.

(e)(1) Nothing in this part shall be construed to require an individual with a disability to accept an accommodation, aid, service, opportunity, or benefit provided under the ADA or this part which such individual chooses not to accept.

(2) Nothing in the Act or this part authorizes the representative or guardian of an individual with a disability to decline food, water, medical treatment, or medical services for that individual.

(f) A public entity may not place a surcharge on a particular individual with a disability or any group of individuals with disabilities to cover the costs of measures, such as the provision of auxiliary aids or program accessibility, that are required to provide that individual or group with the nondiscriminatory treatment required by the Act or this part.

(g) A public entity shall not exclude or otherwise deny equal services, programs, or activities to an individual or entity because of the known disability of an individual with whom the individual or entity is known to have a relationship or association.

§ 35.131 Illegal use of drugs.

(a) *General.* (1) Except as provided in paragraph (b) of this section, this part does not prohibit discrimination against an individual based on that individual's current illegal use of drugs.

(2) A public entity shall not discriminate on the basis of illegal use of drugs against an individual who is not engaging in current illegal use of drugs and who—

(i) Has successfully completed a supervised drug rehabilitation program or has otherwise been rehabilitated successfully;

(ii) Is participating in a supervised rehabilitation program; or

(iii) Is erroneously regarded as engaging in such use.

(b) *Health and drug rehabilitation services.* (1) A public entity shall not deny health services, or services provided in connection with drug rehabilitation, to an individual on the basis of that individual's current illegal use of drugs, if the individual is otherwise entitled to such services.

(2) A drug rehabilitation or treatment program may deny participation to individuals who engage in illegal use of drugs while they are in the program.

(c) *Drug testing.* (1) This part does not prohibit a public entity from adopting or administering reasonable policies or procedures, including but not limited to drug testing, designed to ensure that an individual who formerly engaged in the illegal use of drugs is not now engaging in current illegal use of drugs.

(2) Nothing in paragraph (c) of this section shall be construed to encourage, prohibit, restrict, or authorize the conduct of testing for the illegal use of drugs.

§ 35.132 Smoking.

This part does not preclude the prohibition of, or the imposition of restrictions on, smoking in transportation covered by this part.

§ 35.133 Maintenance of accessible features.

(a) A public entity shall maintain in operable working condition those features of facilities and equipment that are required to be readily accessible to and usable by persons with disabilities by the Act or this part.

(b) This section does not prohibit isolated or temporary interruptions in service or access due to maintenance or repairs.

[56 FR 35716, July 26, 1991, as amended by Order No. 1694–93, 58 FR 17521, Apr. 5, 1993]

§ 35.134 Retaliation or coercion.

(a) No private or public entity shall discriminate against any individual because that individual has opposed any act or practice made unlawful by this part, or because that individual made a charge, testified, assisted, or participated in any manner in an investigation, proceeding, or hearing under the Act or this part.

(b) No private or public entity shall coerce, intimidate, threaten, or interfere with any individual in the exercise or enjoyment of, or on account of his or her having exercised or enjoyed, or on account of his or her having aided or encouraged any other individual in the exercise or enjoyment of, any right granted or protected by the Act or this part.

§ 35.135 Personal devices and services.

This part does not require a public entity to provide to individuals with disabilities personal devices, such as wheelchairs; individually prescribed devices, such as prescription eyeglasses or hearing aids; readers for personal use or study; or services of a personal nature including assistance in eating, toileting, or dressing.

§§ 35.136–35.139 [Reserved]

Subpart C—Employment

§ 35.140 Employment discrimination prohibited.

(a) No qualified individual with a disability shall, on the basis of disability, be subjected to discrimination in employment under any service, program, or activity conducted by a public entity.

(b)(1) For purposes of this part, the requirements of title I of the Act, as established by the regulations of the Equal Employment Opportunity Commission in 29 CFR part 1630, apply to employment in any service, program, or activity conducted by a public entity if that public entity is also subject to the jurisdiction of title I.

(2) For the purposes of this part, the requirements of section 504 of the Rehabilitation Act of 1973, as established by the regulations of the Department of Justice in 28 CFR part 41, as those requirements pertain to employment, apply to employment in any service, program, or activity conducted by a public entity if that public entity is not also subject to the jurisdiction of title I.

§§ 35.141–35.148 [Reserved]

Subpart D—Program Accessibility

§ 35.149 Discrimination prohibited.

Except as otherwise provided in § 35.150, no qualified individual with a disability shall, because a public entity's facilities are inaccessible to or unusable by individuals with disabilities, be excluded from participation in, or be denied the benefits of the services, programs, or activities of a public entity, or be subjected to discrimination by any public entity.

§ 35.150 Existing facilities.

(a) *General.* A public entity shall operate each service, program, or activity so that the service, program, or activity, when viewed in its entirety, is readily accessible to and usable by individuals with disabilities. This paragraph does not—

(1) Necessarily require a public entity to make each of its existing facilities accessible to and usable by individuals with disabilities;

(2) Require a public entity to take any action that would threaten or destroy the historic significance of an historic property; or

(3) Require a public entity to take any action that it can demonstrate would result in a fundamental alteration in the nature of a service, program, or activity or in undue financial and administrative burdens. In those circumstances where personnel of the public entity believe that the proposed action would fundamentally alter the service, program, or activity or would result in undue financial and administrative burdens, a public entity has the burden of proving that compliance with § 35.150(a) of this part would result in such alteration or burdens. The decision that compliance would result in such alteration or burdens must be made by the head of a public entity or his or her designee after considering all resources available for use in the funding and operation of the service, program, or activity, and must be accompanied by a written statement of the reasons for reaching that conclusion. If an action would result in such an alteration or such burdens, a public entity shall take any other action that would

not result in such an alteration or such burdens but would nevertheless ensure that individuals with disabilities receive the benefits or services provided by the public entity.

(b) *Methods*—(1) *General.* A public entity may comply with the requirements of this section through such means as redesign of equipment, reassignment of services to accessible buildings, assignment of aides to beneficiaries, home visits, delivery of services at alternate accessible sites, alteration of existing facilities and construction of new facilities, use of accessible rolling stock or other conveyances, or any other methods that result in making its services, programs, or activities readily accessible to and usable by individuals with disabilities. A public entity is not required to make structural changes in existing facilities where other methods are effective in achieving compliance with this section. A public entity, in making alterations to existing buildings, shall meet the accessibility requirements of § 35.151. In choosing among available methods for meeting the requirements of this section, a public entity shall give priority to those methods that offer services, programs, and activities to qualified individuals with disabilities in the most integrated setting appropriate.

(2) *Historic preservation programs.* In meeting the requirements of § 35.150(a) in historic preservation programs, a public entity shall give priority to methods that provide physical access to individuals with disabilities. In cases where a physical alteration to an historic property is not required because of paragraph (a)(2) or (a)(3) of this section, alternative methods of achieving program accessibility include—

(i) Using audio-visual materials and devices to depict those portions of an historic property that cannot otherwise be made accessible;

(ii) Assigning persons to guide individuals with handicaps into or through portions of historic properties that cannot otherwise be made accessible; or

(iii) Adopting other innovative methods.

(c) *Time period for compliance.* Where structural changes in facilities are undertaken to comply with the obligations established under this section, such changes shall be made within three years of January 26, 1992, but in any event as expeditiously as possible.

(d) *Transition plan.* (1) In the event that structural changes to facilities will be undertaken to achieve program accessibility, a public entity that employs 50 or more persons shall develop, within six months of January 26, 1992, a transition plan setting forth the steps necessary to complete such changes. A public entity shall provide an opportunity to interested persons, including individuals with disabilities or organizations representing individuals with disabilities, to participate in the development of the transition plan by submitting comments. A copy of the transition plan shall be made available for public inspection.

(2) If a public entity has responsibility or authority over streets, roads, or walkways, its transition plan shall include a schedule for providing curb ramps or other sloped areas where pedestrian walks cross curbs, giving priority to walkways serving entities covered by the Act, including State and local government offices and facilities, transportation, places of public accommodation, and employers, followed by walkways serving other areas.

(3) The plan shall, at a minimum—

(i) Identify physical obstacles in the public entity's facilities that limit the accessibility of its programs or activities to individuals with disabilities;

(ii) Describe in detail the methods that will be used to make the facilities accessible;

(iii) Specify the schedule for taking the steps necessary to achieve compliance with this section and, if the time period of the transition plan is longer than one year, identify steps that will be taken during each year of the transition period; and

(iv) Indicate the official responsible for implementation of the plan.

(4) If a public entity has already complied with the transition plan requirement of a Federal agency regulation implementing section 504 of the Rehabilitation Act of 1973, then the requirements of this paragraph (d) shall apply

only to those policies and practices that were not included in the previous transition plan.

(Approved by the Office of Management and Budget under control number 1190–0004)

[56 FR 35716, July 26, 1991, as amended by Order No. 1694–93, 58 FR 17521, Apr. 5, 1993]

§ 35.151 New construction and alterations.

(a) *Design and construction.* Each facility or part of a facility constructed by, on behalf of, or for the use of a public entity shall be designed and constructed in such manner that the facility or part of the facility is readily accessible to and usable by individuals with disabilities, if the construction was commenced after January 26, 1992.

(b) *Alteration.* Each facility or part of a facility altered by, on behalf of, or for the use of a public entity in a manner that affects or could affect the usability of the facility or part of the facility shall, to the maximum extent feasible, be altered in such manner that the altered portion of the facility is readily accessible to and usable by individuals with disabilities, if the alteration was commenced after January 26, 1992.

(c) *Accessibility standards.* Design, construction, or alteration of facilities in conformance with the Uniform Federal Accessibility Standards (UFAS) (appendix A to 41 CFR part 101–19.6) or with the Americans with Disabilities Act Accessibility Guidelines for Buildings and Facilities (ADAAG) (appendix A to 28 CFR part 36) shall be deemed to comply with the requirements of this section with respect to those facilities, except that the elevator exemption contained at section 4.1.3(5) and section 4.1.6(1)(k) of ADAAG shall not apply. Departures from particular requirements of either standard by the use of other methods shall be permitted when it is clearly evident that equivalent access to the facility or part of the facility is thereby provided.

(d) *Alterations: Historic properties.* (1) Alterations to historic properties shall comply, to the maximum extent feasible, with section 4.1.7 of UFAS or section 4.1.7 of ADAAG.

(2) If it is not feasible to provide physical access to an historic property in a manner that will not threaten or destroy the historic significance of the building or facility, alternative methods of access shall be provided pursuant to the requirements of § 35.150.

(e) *Curb ramps.* (1) Newly constructed or altered streets, roads, and highways must contain curb ramps or other sloped areas at any intersection having curbs or other barriers to entry from a street level pedestrian walkway.

(2) Newly constructed or altered street level pedestrian walkways must contain curb ramps or other sloped areas at intersections to streets, roads, or highways.

[56 FR 35716, July 26, 1991, as amended by Order No. 1694–93, 58 FR 17521, Apr. 5, 1993]

§§ 35.152–35.159 [Reserved]

Subpart E—Communications

§ 35.160 General.

(a) A public entity shall take appropriate steps to ensure that communications with applicants, participants, and members of the public with disabilities are as effective as communications with others.

(b)(1) A public entity shall furnish appropriate auxiliary aids and services where necessary to afford an individual with a disability an equal opportunity to participate in, and enjoy the benefits of, a service, program, or activity conducted by a public entity.

(2) In determining what type of auxiliary aid and service is necessary, a public entity shall give primary consideration to the requests of the individual with disabilities.

§ 35.161 Telecommunication devices for the deaf (TDD's).

Where a public entity communicates by telephone with applicants and beneficiaries, TDD's or equally effective telecommunication systems shall be used to communicate with individuals with impaired hearing or speech.

§ 35.162 Telephone emergency services.

Telephone emergency services, including 911 services, shall provide direct access to individuals who use TDD's and computer modems.

§ 35.163 Information and signage.

(a) A public entity shall ensure that interested persons, including persons with impaired vision or hearing, can obtain information as to the existence and location of accessible services, activities, and facilities.

(b) A public entity shall provide signage at all inaccessible entrances to each of its facilities, directing users to an accessible entrance or to a location at which they can obtain information about accessible facilities. The international symbol for accessibility shall be used at each accessible entrance of a facility.

§ 35.164 Duties.

This subpart does not require a public entity to take any action that it can demonstrate would result in a fundamental alteration in the nature of a service, program, or activity or in undue financial and administrative burdens. In those circumstances where personnel of the public entity believe that the proposed action would fundamentally alter the service, program, or activity or would result in undue financial and administrative burdens, a public entity has the burden of proving that compliance with this subpart would result in such alteration or burdens. The decision that compliance would result in such alteration or burdens must be made by the head of the public entity or his or her designee after considering all resources available for use in the funding and operation of the service, program, or activity and must be accompanied by a written statement of the reasons for reaching that conclusion. If an action required to comply with this subpart would result in such an alteration or such burdens, a public entity shall take any other action that would not result in such an alteration or such burdens but would nevertheless ensure that, to the maximum extent possible, individuals with disabilities receive the benefits or services provided by the public entity.

§§ 35.165–35.169 [Reserved]

Subpart F—Compliance Procedures

§ 35.170 Complaints.

(a) *Who may file.* An individual who believes that he or she or a specific class of individuals has been subjected to discrimination on the basis of disability by a public entity may, by himself or herself or by an authorized representative, file a complaint under this part.

(b) *Time for filing.* A complaint must be filed not later than 180 days from the date of the alleged discrimination, unless the time for filing is extended by the designated agency for good cause shown. A complaint is deemed to be filed under this section on the date it is first filed with any Federal agency.

(c) *Where to file.* An individual may file a complaint with any agency that he or she believes to be the appropriate agency designated under subpart G of this part, or with any agency that provides funding to the public entity that is the subject of the complaint, or with the Department of Justice for referral as provided in § 35.171(a)(2).

§ 35.171 Acceptance of complaints.

(a) *Receipt of complaints.* (1)(i) Any Federal agency that receives a complaint of discrimination on the basis of disability by a public entity shall promptly review the complaint to determine whether it has jurisdiction over the complaint under section 504.

(ii) If the agency does not have section 504 jurisdiction, it shall promptly determine whether it is the designated agency under subpart G of this part responsible for complaints filed against that public entity.

(2)(i) If an agency other than the Department of Justice determines that it does not have section 504 jurisdiction and is not the designated agency, it shall promptly refer the complaint, and notify the complainant that it is referring the complaint to the Department of Justice.

(ii) When the Department of Justice receives a complaint for which it does not have jurisdiction under section 504 and is not the designated agency, it

shall refer the complaint to an agency that does have jurisdiction under section 504 or to the appropriate agency designated in subpart G of this part or, in the case of an employment complaint that is also subject to title I of the Act, to the Equal Employment Opportunity Commission.

(3)(i) If the agency that receives a complaint has section 504 jurisdiction, it shall process the complaint according to its procedures for enforcing section 504.

(ii) If the agency that receives a complaint does not have section 504 jurisdiction, but is the designated agency, it shall process the complaint according to the procedures established by this subpart.

(b) *Employment complaints.* (1) If a complaint alleges employment discrimination subject to title I of the Act, and the agency has section 504 jurisdiction, the agency shall follow the procedures issued by the Department of Justice and the Equal Employment Opportunity Commission under section 107(b) of the Act.

(2) If a complaint alleges employment discrimination subject to title I of the Act, and the designated agency does not have section 504 jurisdiction, the agency shall refer the complaint to the Equal Employment Opportunity Commission for processing under title I of the Act.

(3) Complaints alleging employment discrimination subject to this part, but not to title I of the Act shall be processed in accordance with the procedures established by this subpart.

(c) *Complete complaints.* (1) A designated agency shall accept all complete complaints under this section and shall promptly notify the complainant and the public entity of the receipt and acceptance of the complaint.

(2) If the designated agency receives a complaint that is not complete, it shall notify the complainant and specify the additional information that is needed to make the complaint a complete complaint. If the complainant fails to complete the complaint, the designated agency shall close the complaint without prejudice.

§ 35.172 Resolution of complaints.

(a) The designated agency shall investigate each complete complaint, attempt informal resolution, and, if resolution is not achieved, issue to the complainant and the public entity a Letter of Findings that shall include—

(1) Findings of fact and conclusions of law;

(2) A description of a remedy for each violation found; and

(3) Notice of the rights available under paragraph (b) of this section.

(b) If the designated agency finds noncompliance, the procedures in §§ 35.173 and 35.174 shall be followed. At any time, the complainant may file a private suit pursuant to section 203 of the Act, whether or not the designated agency finds a violation.

§ 35.173 Voluntary compliance agreements.

(a) When the designated agency issues a noncompliance Letter of Findings, the designated agency shall—

(1) Notify the Assistant Attorney General by forwarding a copy of the Letter of Findings to the Assistant Attorney General; and

(2) Initiate negotiations with the public entity to secure compliance by voluntary means.

(b) Where the designated agency is able to secure voluntary compliance, the voluntary compliance agreement shall—

(1) Be in writing and signed by the parties;

(2) Address each cited violation;

(3) Specify the corrective or remedial action to be taken, within a stated period of time, to come into compliance;

(4) Provide assurance that discrimination will not recur; and

(5) Provide for enforcement by the Attorney General.

§ 35.174 Referral.

If the public entity declines to enter into voluntary compliance negotiations or if negotiations are unsuccessful, the designated agency shall refer the matter to the Attorney General with a recommendation for appropriate action.

§ 35.175 Attorney's fees.

In any action or administrative proceeding commenced pursuant to the Act or this part, the court or agency, in its discretion, may allow the prevailing party, other than the United States, a reasonable attorney's fee, including litigation expenses, and costs, and the United States shall be liable for the foregoing the same as a private individual.

§ 35.176 Alternative means of dispute resolution.

Where appropriate and to the extent authorized by law, the use of alternative means of dispute resolution, including settlement negotiations, conciliation, facilitation, mediation, fact-finding, minitrials, and arbitration, is encouraged to resolve disputes arising under the Act and this part.

§ 35.177 Effect of unavailability of technical assistance.

A public entity shall not be excused from compliance with the requirements of this part because of any failure to receive technical assistance, including any failure in the development or dissemination of any technical assistance manual authorized by the Act.

§ 35.178 State immunity.

A State shall not be immune under the eleventh amendment to the Constitution of the United States from an action in Federal or State court of competent jurisdiction for a violation of this Act. In any action against a State for a violation of the requirements of this Act, remedies (including remedies both at law and in equity) are available for such a violation to the same extent as such remedies are available for such a violation in an action against any public or private entity other than a State.

§§ 35.179–35.189 [Reserved]

Subpart G—Designated Agencies

§ 35.190 Designated agencies.

(a) The Assistant Attorney General shall coordinate the compliance activities of Federal agencies with respect to State and local government components, and shall provide policy guidance and interpretations to designated agencies to ensure the consistent and effective implementation of the requirements of this part.

(b) The Federal agencies listed in paragraph (b) (1) through (8) of this section shall have responsibility for the implementation of subpart F of this part for components of State and local governments that exercise responsibilities, regulate, or administer services, programs, or activities in the following functional areas.

(1) *Department of Agriculture:* All programs, services, and regulatory activities relating to farming and the raising of livestock, including extension services.

(2) *Department of Education:* All programs, services, and regulatory activities relating to the operation of elementary and secondary education systems and institutions, institutions of higher education and vocational education (other than schools of medicine, dentistry, nursing, and other health-related schools), and libraries.

(3) *Department of Health and Human Services:* All programs, services, and regulatory activities relating to the provision of health care and social services, including schools of medicine, dentistry, nursing, and other health-related schools, the operation of health care and social service providers and institutions, including ''grass-roots'' and community services organizations and programs, and preschool and daycare programs.

(4) *Department of Housing and Urban Development:* All programs, services, and regulatory activities relating to state and local public housing, and housing assistance and referral.

(5) *Department of Interior:* All programs, services, and regulatory activities relating to lands and natural resources, including parks and recreation, water and waste management, environmental protection, energy, historic and cultural preservation, and museums.

(6) *Department of Justice:* All programs, services, and regulatory activities relating to law enforcement, public safety, and the administration of

justice, including courts and correctional institutions; commerce and industry, including general economic development, banking and finance, consumer protection, insurance, and small business; planning, development, and regulation (unless assigned to other designated agencies); state and local government support services (e.g., audit, personnel, comptroller, administrative services); all other government functions not assigned to other designated agencies.

(7) *Department of Labor:* All programs, services, and regulatory activities relating to labor and the work force.

(8) *Department of Transportation:* All programs, services, and regulatory activities relating to transportation, including highways, public transportation, traffic management (non-law enforcement), automobile licensing and inspection, and driver licensing.

(c) Responsibility for the implementation of subpart F of this part for components of State or local governments that exercise responsibilities, regulate, or administer services, programs, or activities relating to functions not assigned to specific designated agencies by paragraph (b) of this section may be assigned to other specific agencies by the Department of Justice.

(d) If two or more agencies have apparent responsibility over a complaint, the Assistant Attorney General shall determine which one of the agencies shall be the designated agency for purposes of that complaint.

§§ 35.191–35.999 [Reserved]

APPENDIX A TO PART 35—PREAMBLE TO REGULATION ON NONDISCRIMINATION ON THE BASIS OF DISABILITY IN STATE AND LOCAL GOVERNMENT SERVICES (PUBLISHED JULY 26, 1991)

NOTE: For the convenience of the reader, this appendix contains the text of the preamble to the final regulation on nondiscrimination on the basis of disability in State and local government services beginning at the heading ''Section-by-Section Analysis'' and ending before ''List of Subjects in 28 CFR Part 35'' (56 FR 35696, July 26, 1991).

SECTION-BY-SECTION ANALYSIS

Subpart A—General

Section 35.101 Purpose

Section 35.101 states the purpose of the rule, which is to effectuate subtitle A of title II of the Americans with Disabilities Act of 1990 (the Act), which prohibits discrimination on the basis of disability by public entities. This part does not, however, apply to matters within the scope of the authority of the Secretary of Transportation under subtitle B of title II of the Act.

Section 35.102 Application

This provision specifies that, except as provided in paragraph (b), the regulation applies to all services, programs, and activities provided or made available by public entities, as that term is defined in § 35.104. Section 504 of the Rehabilitation Act of 1973 (29 U.S.C. 794), which prohibits discrimination on the basis of handicap in federally assisted programs and activities, already covers those programs and activities of public entities that receive Federal financial assistance. Title II of the ADA extends this prohibition of discrimination to include all services, programs, and activities provided or made available by State and local governments or any of their instrumentalities or agencies, regardless of the receipt of Federal financial assistance. Except as provided in § 35.134, this part does not apply to private entities.

The scope of title II's coverage of public entities is comparable to the coverage of Federal Executive agencies under the 1978 amendment to section 504, which extended section 504's application to all programs and activities ''conducted by'' Federal Executive agencies, in that title II applies to anything a public entity does. Title II coverage, however, is not limited to ''Executive'' agencies, but includes activities of the legislative and judicial branches of State and local governments. All governmental activities of public entities are covered, even if they are carried out by contractors. For example, a State is obligated by title II to ensure that the services, programs, and activities of a State park inn operated under contract by a private entity are in compliance with title II's requirements. The private entity operating the inn would also be subject to the obligations of public accommodations under title III of the Act and the Department's title III regulations at 28 CFR part 36.

Aside from employment, which is also covered by title I of the Act, there are two major categories of programs or activities covered by this regulation: those involving general public contact as part of ongoing operations of the entity and those directly administered by the entities for program beneficiaries and participants. Activities in the first category include communication with

the public (telephone contacts, office walk-ins, or interviews) and the public's use of the entity's facilities. Activities in the second category include programs that provide State or local government services or benefits.

Paragraph (b) of §35.102 explains that to the extent that the public transportation services, programs, and activities of public entities are covered by subtitle B of title II of the Act, they are subject to the regulation of the Department of Transportation (DOT) at 49 CFR part 37, and are not covered by this part. The Department of Transportation's ADA regulation establishes specific requirements for construction of transportation facilities and acquisition of vehicles. Matters not covered by subtitle B, such as the provision of auxiliary aids, are covered by this rule. For example, activities that are covered by the Department of Transportation's regulation implementing subtitle B are not required to be included in the self-evaluation required by §35.105. In addition, activities not specifically addressed by DOT's ADA regulation may be covered by DOT's regulation implementing section 504 for its federally assisted programs and activities at 49 CFR part 27. Like other programs of public entities that are also recipients of Federal financial assistance, those programs would be covered by both the section 504 regulation and this part. Although airports operated by public entities are not subject to DOT's ADA regulation, they are subject to subpart A of title II and to this rule.

Some commenters asked for clarification about the responsibilities of public school systems under section 504 and the ADA with respect to programs, services, and activities that are not covered by the Individuals with Disabilities Education Act (IDEA), including, for example, programs open to parents or to the public, graduation ceremonies, parent-teacher organization meetings, plays and other events open to the public, and adult education classes. Public school systems must comply with the ADA in all of their services, programs, or activities, including those that are open to parents or to the public. For instance, public school systems must provide program accessibility to parents and guardians with disabilities to these programs, activities, or services, and appropriate auxiliary aids and services whenever necessary to ensure effective communication, as long as the provision of the auxiliary aids results neither in an undue burden or in a fundamental alteration of the program.

Section 35.103 Relationship to Other Laws

Section 35.103 is derived from sections 501 (a) and (b) of the ADA. Paragraph (a) of this section provides that, except as otherwise specifically provided by this part, title II of the ADA is not intended to apply lesser standards than are required under title V of the Rehabilitation Act of 1973, as amended (29 U.S.C. 790–94), or the regulations implementing that title. The standards of title V of the Rehabilitation Act apply for purposes of the ADA to the extent that the ADA has not explicitly adopted a different standard than title V. Because title II of the ADA essentially extends the antidiscrimination prohibition embodied in section 504 to all actions of State and local governments, the standards adopted in this part are generally the same as those required under section 504 for federally assisted programs. Title II, however, also incorporates those provisions of titles I and III of the ADA that are not inconsistent with the regulations implementing section 504. Judiciary Committee report, H.R. Rep. No. 485, 101st Cong., 2d Sess., pt. 3, at 51 (1990) (hereinafter ''Judiciary report'') ; Education and Labor Committee report, H.R. Rep. No. 485, 101st Cong., 2d Sess., pt. 2, at 84 (1990) (hereinafter ''Education and Labor report''). Therefore, this part also includes appropriate provisions derived from the regulations implementing those titles. The inclusion of specific language in this part, however, should not be interpreted as an indication that a requirement is not included under a regulation implementing section 504.

Paragraph (b) makes clear that Congress did not intend to displace any of the rights or remedies provided by other Federal laws (including section 504) or other State laws (including State common law) that provide greater or equal protection to individuals with disabilities. As discussed above, the standards adopted by title II of the ADA for State and local government services are generally the same as those required under section 504 for federally assisted programs and activities. Subpart F of the regulation establishes compliance procedures for processing complaints covered by both this part and section 504.

With respect to State law, a plaintiff may choose to pursue claims under a State law that does not confer greater substantive rights, or even confers fewer substantive rights, if the alleged violation is protected under the alternative law and the remedies are greater. For example, a person with a physical disability could seek damages under a State law that allows compensatory and punitive damages for discrimination on the basis of physical disability, but not on the basis of mental disability. In that situation, the State law would provide narrower coverage, by excluding mental disabilities, but broader remedies, and an individual covered by both laws could choose to bring an action under both laws. Moreover, State tort claims confer greater remedies and are not preempted by the ADA. A plaintiff may join a State tort claim to a case brought under the

ADA. In such a case, the plaintiff must, of course, prove all the elements of the State tort claim in order to prevail under that cause of action.

Section 35.104 Definitions

''Act.'' The word ''Act'' is used in this part to refer to the Americans with Disabilities Act of 1990, Public Law 101–336, which is also referred to as the ''ADA.''

''Assistant Attorney General.'' The term ''Assistant Attorney General'' refers to the Assistant Attorney General of the Civil Rights Division of the Department of Justice.

''Auxiliary aids and services.'' Auxiliary aids and services include a wide range of services and devices for ensuring effective communication. The proposed definition in §35.104 provided a list of examples of auxiliary aids and services that were taken from the definition of auxiliary aids and services in section 3(1) of the ADA and were supplemented by examples from regulations implementing section 504 in federally conducted programs (see 28 CFR 39.103).

A substantial number of commenters suggested that additional examples be added to this list. The Department has added several items to this list but wishes to clarify that the list is not an all-inclusive or exhaustive catalogue of possible or available auxiliary aids or services. It is not possible to provide an exhaustive list, and an attempt to do so would omit the new devices that will become available with emerging technology.

Subparagraph (1) lists several examples, which would be considered auxiliary aids and services to make aurally delivered materials available to individuals with hearing impairments. The Department has changed the phrase used in the proposed rules, ''orally delivered materials,'' to the statutory phrase, ''aurally delivered materials,'' to track section 3 of the ADA and to include non-verbal sounds and alarms, and computer generated speech.

The Department has added videotext displays, transcription services, and closed and open captioning to the list of examples. Videotext displays have become an important means of accessing auditory communications through a public address system. Transcription services are used to relay aurally delivered material almost simultaneously in written form to persons who are deaf or hearing-impaired. This technology is often used at conferences, conventions, and hearings. While the proposed rule expressly included television decoder equipment as an auxiliary aid or service, it did not mention captioning itself. The final rule rectifies this omission by mentioning both closed and open captioning.

Several persons and organizations requested that the Department replace the term ''telecommunications devices for deaf persons'' or ''TDD's'' with the term ''text telephone.'' The Department has declined to do so. The Department is aware that the Architectural and Transportation Barriers Compliance Board (ATBCB) has used the phrase ''text telephone'' in lieu of the statutory term ''TDD'' in its final accessibility guidelines. Title IV of the ADA, however, uses the term ''Telecommunications Device for the Deaf'' and the Department believes it would be inappropriate to abandon this statutory term at this time.

Several commenters urged the Department to include in the definition of ''auxiliary aids and services'' devices that are now available or that may become available with emerging technology. The Department declines to do so in the rule. The Department, however, emphasizes that, although the definition would include ''state of the art'' devices, public entities are not required to use the newest or most advanced technologies as long as the auxiliary aid or service that is selected affords effective communication.

Subparagraph (2) lists examples of aids and services for making visually delivered materials accessible to persons with visual impairments. Many commenters proposed additional examples, such as signage or mapping, audio description services, secondary auditory programs, telebraillers, and reading machines. While the Department declines to add these items to the list, they are auxiliary aids and services and may be appropriate depending on the circumstances.

Subparagraph (3) refers to acquisition or modification of equipment or devices. Several commenters suggested the addition of current technological innovations in microelectronics and computerized control systems (e.g., voice recognition systems, automatic dialing telephones, and infrared elevator and light control systems) to the list of auxiliary aids. The Department interprets auxiliary aids and services as those aids and services designed to provide effective communications, i.e., making aurally and visually delivered information available to persons with hearing, speech, and vision impairments. Methods of making services, programs, or activities accessible to, or usable by, individuals with mobility or manual dexterity impairments are addressed by other sections of this part, including the provision for modifications in policies, practices, or procedures (§35.130 (b)(7)).

Paragraph (b)(4) deals with other similar services and actions. Several commenters asked for clarification that ''similar services and actions'' include retrieving items from shelves, assistance in reaching a marginally accessible seat, pushing a barrier aside in order to provide an accessible route, or assistance in removing a sweater or coat. While retrieving an item from a shelf might be an ''auxiliary aid or service'' for a blind

person who could not locate the item without assistance, it might be a method of providing program access for a person using a wheelchair who could not reach the shelf, or a reasonable modification to a self-service policy for an individual who lacked the ability to grasp the item. As explained above, auxiliary aids and services are those aids and services required to provide effective communications. Other forms of assistance are more appropriately addressed by other provisions of the final rule.

''Complete complaint.'' ''Complete complaint'' is defined to include all the information necessary to enable the Federal agency designated under subpart G as responsible for investigation of a complaint to initiate its investigation.

''Current illegal use of drugs.'' The phrase ''current illegal use of drugs'' is used in §35.131. Its meaning is discussed in the preamble for that section.

''Designated agency.'' The term ''designated agency'' is used to refer to the Federal agency designated under subpart G of this rule as responsible for carrying out the administrative enforcement responsibilities established by subpart F of the rule.

''Disability.'' The definition of the term ''disability'' is the same as the definition in the title III regulation codified at 28 CFR part 36. It is comparable to the definition of the term ''individual with handicaps'' in section 7(8) of the Rehabilitation Act and section 802(h) of the Fair Housing Act. The Education and Labor Committee report makes clear that the analysis of the term ''individual with handicaps'' by the Department of Health, Education, and Welfare (HEW) in its regulations implementing section 504 (42 FR 22685 (May 4, 1977)) and the analysis by the Department of Housing and Urban Development in its regulation implementing the Fair Housing Amendments Act of 1988 (54 FR 3232 (Jan. 23, 1989)) should also apply fully to the term ''disability'' (Education and Labor report at 50).

The use of the term ''disability'' instead of ''handicap'' and the term ''individual with a disability'' instead of ''individual with handicaps'' represents an effort by Congress to make use of up-to-date, currently accepted terminology. As with racial and ethnic epithets, the choice of terms to apply to a person with a disability is overlaid with stereotypes, patronizing attitudes, and other emotional connotations. Many individuals with disabilities, and organizations representing such individuals, object to the use of such terms as ''handicapped person'' or ''the handicapped.'' In other recent legislation, Congress also recognized this shift in terminology, e.g., by changing the name of the National Council on the Handicapped to the National Council on Disability (Pub. L. 100–630).

In enacting the Americans with Disabilities Act, Congress concluded that it was important for the current legislation to use terminology most in line with the sensibilities of most Americans with disabilities. No change in definition or substance is intended nor should one be attributed to this change in phraseology.

The term ''disability'' means, with respect to an individual—

(A) A physical or mental impairment that substantially limits one or more of the major life activities of such individual;

(B) A record of such an impairment; or

(C) Being regarded as having such an impairment. If an individual meets any one of these three tests, he or she is considered to be an individual with a disability for purposes of coverage under the Americans with Disabilities Act.

Congress adopted this same basic definition of ''disability,'' first used in the Rehabilitation Act of 1973 and in the Fair Housing Amendments Act of 1988, for a number of reasons. First, it has worked well since it was adopted in 1974. Second, it would not be possible to guarantee comprehensiveness by providing a list of specific disabilities, especially because new disorders may be recognized in the future, as they have since the definition was first established in 1974.

TEST A—A PHYSICAL OR MENTAL IMPAIRMENT THAT SUBSTANTIALLY LIMITS ONE OR MORE OF THE MAJOR LIFE ACTIVITIES OF SUCH INDIVIDUAL

Physical or mental impairment. Under the first test, an individual must have a physical or mental impairment. As explained in paragraph (1)(i) of the definition, ''impairment'' means any physiological disorder or condition, cosmetic disfigurement, or anatomical loss affecting one or more of the following body systems: neurological; musculoskeletal; special sense organs (which would include speech organs that are not respiratory such as vocal cords, soft palate, tongue, etc.); respiratory, including speech organs; cardiovascular; reproductive; digestive; genitourinary; hemic and lymphatic; skin; and endocrine. It also means any mental or psychological disorder, such as mental retardation, organic brain syndrome, emotional or mental illness, and specific learning disabilities. This list closely tracks the one used in the regulations for section 504 of the Rehabilitation Act of 1973 (see, *e.g.*, 45 CFR 84.3(j)(2)(i)).

Many commenters asked that ''traumatic brain injury'' be added to the list in paragraph (1)(i). Traumatic brain injury is already included because it is a physiological condition affecting one of the listed body systems, i.e., ''neurological.'' Therefore, it was unnecessary to add the term to the regulation, which only provides representative examples of physiological disorders.

It is not possible to include a list of all the specific conditions, contagious and noncontagious diseases, or infections that would constitute physical or mental impairments because of the difficulty of ensuring the comprehensiveness of such a list, particularly in light of the fact that other conditions or disorders may be identified in the future. However, the list of examples in paragraph (1)(ii) of the definition includes: orthopedic, visual, speech and hearing impairments, cerebral palsy, epilepsy, muscular dystrophy, multiple sclerosis, cancer, heart disease, diabetes, mental retardation, emotional illness, specific learning disabilities, HIV disease (symptomatic or asymptomatic), tuberculosis, drug addiction, and alcoholism. The phrase ''symptomatic or asymptomatic'' was inserted in the final rule after ''HIV disease'' in response to commenters who suggested the clarification was necessary.

The examples of ''physical or mental impairments'' in paragraph (1)(ii) are the same as those contained in many section 504 regulations, except for the addition of the phrase ''contagious and noncontagious'' to describe the types of diseases and conditions included, and the addition of ''HIV disease (symptomatic or asymptomatic)'' and ''tuberculosis'' to the list of examples. These additions are based on the committee reports, caselaw, and official legal opinions interpreting section 504. In *School Board of Nassau County* v. *Arline*, 480 U.S. 273 (1987), a case involving an individual with tuberculosis, the Supreme Court held that people with contagious diseases are entitled to the protections afforded by section 504. Following the *Arline* decision, this Department's Office of Legal Counsel issued a legal opinion that concluded that symptomatic HIV disease is an impairment that substantially limits a major life activity; therefore it has been included in the definition of disability under this part. The opinion also concluded that asymptomatic HIV disease is an impairment that substantially limits a major life activity, either because of its actual effect on the individual with HIV disease or because the reactions of other people to individuals with HIV disease cause such individuals to be treated as though they are disabled. See Memorandum from Douglas W. Kmiec, Acting Assistant Attorney General, Office of Legal Counsel, Department of Justice, to Arthur B. Culvahouse, Jr., Counsel to the President (Sept. 27, 1988), reprinted in Hearings on S. 933, the Americans with Disabilities Act, Before the Subcomm. on the Handicapped of the Senate Comm. on Labor and Human Resources, 101st. Cong., 1st Sess. 346 (1989).

Paragraph (1)(iii) states that the phrase ''physical or mental impairment'' does not include homosexuality or bisexuality. These conditions were never considered impairments under other Federal disability laws. Section 511(a) of the statute makes clear that they are likewise not to be considered impairments under the Americans with Disabilities Act.

Physical or mental impairment does not include simple physical characteristics, such as blue eyes or black hair. Nor does it include environmental, cultural, economic, or other disadvantages, such as having a prison record, or being poor. Nor is age a disability. Similarly, the definition does not include common personality traits such as poor judgment or a quick temper where these are not symptoms of a mental or psychological disorder. However, a person who has these characteristics and also has a physical or mental impairment may be considered as having a disability for purposes of the Americans with Disabilities Act based on the impairment.

Substantial Limitation of a Major Life Activity. Under Test A, the impairment must be one that ''substantially limits a major life activity.'' Major life activities include such things as caring for one's self, performing manual tasks, walking, seeing, hearing, speaking, breathing, learning, and working.

For example, a person who is paraplegic is substantially limited in the major life activity of walking, a person who is blind is substantially limited in the major life activity of seeing, and a person who is mentally retarded is substantially limited in the major life activity of learning. A person with traumatic brain injury is substantially limited in the major life activities of caring for one's self, learning, and working because of memory deficit, confusion, contextual difficulties, and inability to reason appropriately.

A person is considered an individual with a disability for purposes of Test A, the first prong of the definition, when the individual's important life activities are restricted as to the conditions, manner, or duration under which they can be performed in comparison to most people. A person with a minor, trivial impairment, such as a simple infected finger, is not impaired in a major life activity. A person who can walk for 10 miles continuously is not substantially limited in walking merely because, on the eleventh mile, he or she begins to experience pain, because most people would not be able to walk eleven miles without experiencing some discomfort.

The Department received many comments on the proposed rule's inclusion of the word ''temporary'' in the definition of ''disability.'' The preamble indicated that impairments are not necessarily excluded from the definition of ''disability'' simply because they are temporary, but that the duration, or expected duration, of an impairment is one factor that may properly be considered in determining whether the impairment substantially limits a major life activity. The

preamble recognized, however, that temporary impairments, such as a broken leg, are not commonly regarded as disabilities, and only in rare circumstances would the degree of the limitation and its expected duration be substantial. Nevertheless, many commenters objected to inclusion of the word ''temporary'' both because it is not in the statute and because it is not contained in the definition of ''disability'' set forth in the title I regulations of the Equal Employment Opportunity Commission (EEOC). The word ''temporary'' has been deleted from the final rule to conform with the statutory language.

The question of whether a temporary impairment is a disability must be resolved on a case-by-case basis, taking into consideration both the duration (or expected duration) of the impairment and the extent to which it actually limits a major life activity of the affected individual.

The question of whether a person has a disability should be assessed without regard to the availability of mitigating measures, such as reasonable modification or auxiliary aids and services. For example, a person with hearing loss is substantially limited in the major life activity of hearing, even though the loss may be improved through the use of a hearing aid. Likewise, persons with impairments, such as epilepsy or diabetes, that substantially limit a major life activity, are covered under the first prong of the definition of disability, even if the effects of the impairment are controlled by medication.

Many commenters asked that environmental illness (also known as multiple chemical sensitivity) as well as allergy to cigarette smoke be recognized as disabilities. The Department, however, declines to state categorically that these types of allergies or sensitivities are disabilities, because the determination as to whether an impairment is a disability depends on whether, given the particular circumstances at issue, the impairment substantially limits one or more major life activities (or has a history of, or is regarded as having such an effect).

Sometimes respiratory or neurological functioning is so severely affected that an individual will satisfy the requirements to be considered disabled under the regulation. Such an individual would be entitled to all of the protections afforded by the Act and this part. In other cases, individuals may be sensitive to environmental elements or to smoke but their sensitivity will not rise to the level needed to constitute a disability. For example, their major life activity of breathing may be somewhat, but not substantially, impaired. In such circumstances, the individuals are not disabled and are not entitled to the protections of the statute despite their sensitivity to environmental agents.

In sum, the determination as to whether allergies to cigarette smoke, or allergies or sensitivities characterized by the commenters as environmental illness are disabilities covered by the regulation must be made using the same case-by-case analysis that is applied to all other physical or mental impairments. Moreover, the addition of specific regulatory provisions relating to environmental illness in the final rule would be inappropriate at this time pending future consideration of the issue by the Architectural and Transportation Barriers Compliance Board, the Environmental Protection Agency, and the Occupational Safety and Health Administration of the Department of Labor.

TEST B—A RECORD OF SUCH AN IMPAIRMENT

This test is intended to cover those who have a record of an impairment. As explained in paragraph (3) of the rule's definition of disability, this includes a person who has a history of an impairment that substantially limited a major life activity, such as someone who has recovered from an impairment. It also includes persons who have been misclassified as having an impairment.

This provision is included in the definition in part to protect individuals who have recovered from a physical or mental impairment that previously substantially limited them in a major life activity. Discrimination on the basis of such a past impairment is prohibited. Frequently occurring examples of the first group (those who have a history of an impairment) are persons with histories of mental or emotional illness, heart disease, or cancer; examples of the second group (those who have been misclassified as having an impairment) are persons who have been misclassified as having mental retardation or mental illness.

TEST C—BEING REGARDED AS HAVING SUCH AN IMPAIRMENT

This test, as contained in paragraph (4) of the definition, is intended to cover persons who are treated by a public entity as having a physical or mental impairment that substantially limits a major life activity. It applies when a person is treated as if he or she has an impairment that substantially limits a major life activity, regardless of whether that person has an impairment.

The Americans with Disabilities Act uses the same ''regarded as'' test set forth in the regulations implementing section 504 of the Rehabilitation Act. See, e.g., 28 CFR 42.540(k)(2)(iv), which provides:

(iv) ''Is regarded as having an impairment'' means (A) Has a physical or mental impairment that does not substantially limit major life activities but that is treated by a recipient as constituting such a limitation; (B) Has a physical or mental impairment that substantially limits major life activities only as a result of the attitudes of others toward such impairment; or (C) Has none of

the impairments defined in paragraph (k)(2)(i) of this section but is treated by a recipient as having such an impairment.

The perception of the covered entity is a key element of this test. A person who perceives himself or herself to have an impairment, but does not have an impairment, and is not treated as if he or she has an impairment, is not protected under this test.

A person would be covered under this test if a public entity refused to serve the person because it perceived that the person had an impairment that limited his or her enjoyment of the goods or services being offered.

For example, persons with severe burns often encounter discrimination in community activities, resulting in substantial limitation of major life activities. These persons would be covered under this test based on the attitudes of others towards the impairment, even if they did not view themselves as ''impaired.''

The rationale for this third test, as used in the Rehabilitation Act of 1973, was articulated by the Supreme Court in *Arline,* 480 U.S. 273 (1987). The Court noted that although an individual may have an impairment that does not in fact substantially limit a major life activity, the reaction of others may prove just as disabling. ''Such an impairment might not diminish a person's physical or mental capabilities, but could nevertheless substantially limit that person's ability to work as a result of the negative reactions of others to the impairment.'' *Id.* at 283. The Court concluded that, by including this test in the Rehabilitation Act's definition, ''Congress acknowledged that society's accumulated myths and fears about disability and diseases are as handicapping as are the physical limitations that flow from actual impairment.'' *Id.* at 284.

Thus, a person who is denied services or benefits by a public entity because of myths, fears, and stereotypes associated with disabilities would be covered under this third test whether or not the person's physical or mental condition would be considered a disability under the first or second test in the definition.

If a person is refused admittance on the basis of an actual or perceived physical or mental condition, and the public entity can articulate no legitimate reason for the refusal (such as failure to meet eligibility criteria), a perceived concern about admitting persons with disabilities could be inferred and the individual would qualify for coverage under the ''regarded as'' test. A person who is covered because of being regarded as having an impairment is not required to show that the public entity's perception is inaccurate (e.g., that he will be accepted by others) in order to receive benefits from the public entity.

Paragraph (5) of the definition lists certain conditions that are not included within the definition of ''disability.'' The excluded conditions are: Transvestism, transsexualism, pedophilia, exhibitionism, voyeurism, gender identity disorders not resulting from physical impairments, other sexual behavior disorders, compulsive gambling, kleptomania, pyromania, and psychoactive substance use disorders resulting from current illegal use of drugs. Unlike homosexuality and bisexuality, which are not considered impairments under either section 504 or the Americans with Disabilities Act (see the definition of ''disability,'' paragraph (1)(iv)), the conditions listed in paragraph (5), except for transvestism, are not necessarily excluded as impairments under section 504. (Transvestism was excluded from the definition of disability for section 504 by the Fair Housing Amendments Act of 1988, Pub. L. 100–430, section 6(b)).

''Drug.'' The definition of the term ''drug'' is taken from section 510(d)(2) of the ADA.

''Facility.'' ''Facility'' means all or any portion of buildings, structures, sites, complexes, equipment, rolling stock or other conveyances, roads, walks, passageways, parking lots, or other real or personal property, including the site where the building, property, structure, or equipment is located. It includes both indoor and outdoor areas where human-constructed improvements, structures, equipment, or property have been added to the natural environment.

Commenters raised questions about the applicability of this part to activities operated in mobile facilities, such as bookmobiles or mobile health screening units. Such activities would be covered by the requirement for program accessibility in §35.150, and would be included in the definition of ''facility'' as ''other real or personal property,'' although standards for new construction and alterations of such facilities are not yet included in the accessibility standards adopted by §35.151. Sections 35.150 and 35.151 specifically address the obligations of public entities to ensure accessibility by providing curb ramps at pedestrian walkways.

''Historic preservation programs'' and ''Historic properties'' are defined in order to aid in the interpretation of §§35.150 (a)(2) and (b)(2), which relate to accessibility of historic preservation programs, and §35.151(d), which relates to the alteration of historic properties.

''Illegal use of drugs.'' The definition of ''illegal use of drugs'' is taken from section 510(d)(1) of the Act and clarifies that the term includes the illegal use of one or more drugs.

''Individual with a disability'' means a person who has a disability but does not include an individual who is currently illegally using drugs, when the public entity acts on the basis of such use. The phrase ''current illegal use of drugs'' is explained in §35.131.

''Public entity.'' The term ''public entity'' is defined in accordance with section 201(1) of the ADA as any State or local government; any department, agency, special purpose district, or other instrumentality of a State or States or local government; or the National Railroad Passenger Corporation, and any commuter authority (as defined in section 103(8) of the Rail Passenger Service Act).

''Qualified individual with a disability.'' The definition of ''qualified individual with a disability'' is taken from section 201(2) of the Act, which is derived from the definition of ''qualified handicapped person'' in the Department of Health and Human Services' regulation implementing section 504 (45 CFR §84.3(k)). It combines the definition at 45 CFR 84.3(k)(1) for employment (''a handicapped person who, with reasonable accommodation, can perform the essential functions of the job in question'') with the definition for other services at 45 CFR 84.3(k)(4) (''a handicapped person who meets the essential eligibility requirements for the receipt of such services'').

Some commenters requested clarification of the term ''essential eligibility requirements.'' Because of the variety of situations in which an individual's qualifications will be at issue, it is not possible to include more specific criteria in the definition. The ''essential eligibility requirements'' for participation in some activities covered under this part may be minimal. For example, most public entities provide information about their operations as a public service to anyone who requests it. In such situations, the only ''eligibility requirement'' for receipt of such information would be the request for it. Where such information is provided by telephone, even the ability to use a voice telephone is not an ''essential eligibility requirement,'' because §35.161 requires a public entity to provide equally effective telecommunication systems for individuals with impaired hearing or speech.

For other activities, identification of the ''essential eligibility requirements'' may be more complex. Where questions of safety are involved, the principles established in §36.208 of the Department's regulation implementing title III of the ADA, to be codified at 28 CFR, part 36, will be applicable. That section implements section 302(b)(3) of the Act, which provides that a public accommodation is not required to permit an individual to participate in or benefit from the goods, services, facilities, privileges, advantages and accommodations of the public accommodation, if that individual poses a direct threat to the health or safety of others.

A ''direct threat'' is a significant risk to the health or safety of others that cannot be eliminated by a modification of policies, practices, or procedures, or by the provision of auxiliary aids or services. In *School Board of Nassau County* v. *Arline*, 480 U.S. 273 (1987), the Supreme Court recognized that there is a need to balance the interests of people with disabilities against legitimate concerns for public safety. Although persons with disabilities are generally entitled to the protection of this part, a person who poses a significant risk to others will not be ''qualified,'' if reasonable modifications to the public entity's policies, practices, or procedures will not eliminate that risk.

The determination that a person poses a direct threat to the health or safety of others may not be based on generalizations or stereotypes about the effects of a particular disability. It must be based on an individualized assessment, based on reasonable judgment that relies on current medical evidence or on the best available objective evidence, to determine: the nature, duration, and severity of the risk; the probability that the potential injury will actually occur; and whether reasonable modifications of policies, practices, or procedures will mitigate the risk. This is the test established by the Supreme Court in *Arline*. Such an inquiry is essential if the law is to achieve its goal of protecting disabled individuals from discrimination based on prejudice, stereotypes, or unfounded fear, while giving appropriate weight to legitimate concerns, such as the need to avoid exposing others to significant health and safety risks. Making this assessment will not usually require the services of a physician. Sources for medical knowledge include guidance from public health authorities, such as the U.S. Public Health Service, the Centers for Disease Control, and the National Institutes of Health, including the National Institute of Mental Health.

''Qualified interpreter.'' The Department received substantial comment regarding the lack of a definition of ''qualified interpreter.'' The proposed rule defined auxiliary aids and services to include the statutory term, ''qualified interpreters'' (§35.104), but did not define it. Section 35.160 requires the use of auxiliary aids including qualified interpreters and commenters stated that a lack of guidance on what the term means would create confusion among those trying to secure interpreting services and often result in less than effective communication.

Many commenters were concerned that, without clear guidance on the issue of ''qualified'' interpreter, the rule would be interpreted to mean ''available, rather than qualified'' interpreters. Some claimed that few public entities would understand the difference between a qualified interpreter and a person who simply knows a few signs or how to fingerspell.

In order to clarify what is meant by ''qualified interpreter'' the Department has added a definition of the term to the final rule. A qualified interpreter means an interpreter who is able to interpret effectively, accurately, and impartially both receptively

and expressively, using any necessary specialized vocabulary. This definition focuses on the actual ability of the interpreter in a particular interpreting context to facilitate effective communication between the public entity and the individual with disabilities.

Public comment also revealed that public entities have at times asked persons who are deaf to provide family members or friends to interpret. In certain circumstances, notwithstanding that the family member of friend is able to interpret or is a certified interpreter, the family member or friend may not be qualified to render the necessary interpretation because of factors such as emotional or personal involvement or considerations of confidentiality that may adversely affect the ability to interpret''effectively, accurately, and impartially.''

The definition of ''qualified interpreter'' in this rule does not invalidate or limit standards for interpreting services of any State or local law that are equal to or more stringent than those imposed by this definition. For instance, the definition would not supersede any requirement of State law for use of a certified interpreter in court proceedings.

''Section 504.'' The Department added a definition of ''section 504'' because the term is used extensively in subpart F of this part.

''State.'' The definition of ''State'' is identical to the statutory definition in section 3(3) of the ADA.

Section 35.105 Self-evaluation

Section 35.105 establishes a requirement, based on the section 504 regulations for federally assisted and federally conducted programs, that a public entity evaluate its current policies and practices to identify and correct any that are not consistent with the requirements of this part. As noted in the discussion of §35.102, activities covered by the Department of Transportation's regulation implementing subtitle B of title II are not required to be included in the self-evaluation required by this section.

Experience has demonstrated the self-evaluation process to be a valuable means of establishing a working relationship with individuals with disabilities, which has promoted both effective and efficient implementation of section 504. The Department expects that it will likewise be useful to public entities newly covered by the ADA.

All public entities are required to do a self-evaluation. However, only those that employ 50 or more persons are required to maintain the self-evaluation on file and make it available for public inspection for three years. The number 50 was derived from the Department of Justice's section 504 regulations for federally assisted programs, 28 CFR 42.505(c). The Department received comments critical of this limitation, some suggesting the requirement apply to all public entities and others suggesting that the number be changed from 50 to 15. The final rule has not been changed. Although many regulations implementing section 504 for federally assisted programs do use 15 employees as the cut-off for this record-keeping requirement, the Department believes that it would be inappropriate to extend it to those smaller public entities covered by this regulation that do not receive Federal financial assistance. This approach has the benefit of minimizing paperwork burdens on small entities.

Paragraph (d) provides that the self-evaluation required by this section shall apply only to programs not subject to section 504 or those policies and practices, such as those involving communications access, that have not already been included in a self-evaluation required under an existing regulation implementing section 504. Because most self-evaluations were done from five to twelve years ago, however, the Department expects that a great many public entities will be reexamining all of their policies and programs. Programs and functions may have changed, and actions that were supposed to have been taken to comply with section 504 may not have been fully implemented or may no longer be effective. In addition, there have been statutory amendments to section 504 which have changed the coverage of section 504, particularly the Civil Rights Restoration Act of 1987, Public Law No. 100–259, 102 Stat. 28 (1988), which broadened the definition of a covered ''program or activity.''

Several commenters suggested that the Department clarify public entities' liability during the one-year period for compliance with the self-evaluation requirement. The self-evaluation requirement does not stay the effective date of the statute nor of this part. Public entities are, therefore, not shielded from discrimination claims during that time.

Other commenters suggested that the rule require that every self-evaluation include an examination of training efforts to assure that individuals with disabilities are not subjected to discrimination because of insensitivity, particularly in the law enforcement area. Although the Department has not added such a specific requirement to the rule, it would be appropriate for public entities to evaluate training efforts because, in many cases, lack of training leads to discriminatory practices, even when the policies in place are nondiscriminatory.

Section 35.106 Notice

Section 35.106 requires a public entity to disseminate sufficient information to applicants, participants, beneficiaries, and other interested persons to inform them of the rights and protections afforded by the ADA and this regulation. Methods of providing this information include, for example, the publication of information in handbooks, manuals, and pamphlets that are distributed

to the public to describe a public entity's programs and activities; the display of informative posters in service centers and other public places; or the broadcast of information by television or radio. In providing the notice, a public entity must comply with the requirements for effective communication in §35.160. The preamble to that section gives guidance on how to effectively communicate with individuals with disabilities.

Section 35.107 Designation of Responsible Employee and Adoption of Grievance Procedures

Consistent with §35.105, self-evaluation, the final rule requires that public entities with 50 or more employees designate a responsible employee and adopt grievance procedures. Most of the commenters who suggested that the requirement that self-evaluation be maintained on file for three years not be limited to those employing 50 or more persons made a similar suggestion concerning §35.107. Commenters recommended either that all public entities be subject to §35.107, or that ''50 or more persons'' be changed to ''15 or more persons.'' As explained in the discussion of §35.105, the Department has not adopted this suggestion.

The requirement for designation of an employee responsible for coordination of efforts to carry out responsibilities under this part is derived from the HEW regulation implementing section 504 in federally assisted programs. The requirement for designation of a particular employee and dissemination of information about how to locate that employee helps to ensure that individuals dealing with large agencies are able to easily find a responsible person who is familiar with the requirements of the Act and this part and can communicate those requirements to other individuals in the agency who may be unaware of their responsibilities. This paragraph in no way limits a public entity's obligation to ensure that all of its employees comply with the requirements of this part, but it ensures that any failure by individual employees can be promptly corrected by the designated employee.

Section 35.107(b) requires public entities with 50 or more employees to establish grievance procedures for resolving complaints of violations of this part. Similar requirements are found in the section 504 regulations for federally assisted programs (see, e.g., 45 CFR 84.7(b)). The rule, like the regulations for federally assisted programs, provides for investigation and resolution of complaints by a Federal enforcement agency. It is the view of the Department that public entities subject to this part should be required to establish a mechanism for resolution of complaints at the local level without requiring the complainant to resort to the Federal complaint procedures established under subpart F. Complainants would not, however, be required to exhaust the public entity's grievance procedures before filing a complaint under subpart F. Delay in filing the complaint at the Federal level caused by pursuit of the remedies available under the grievance procedure would generally be considered good cause for extending the time allowed for filing under §35.170(b).

Subpart B—General Requirements

Section 35.130 General Prohibitions Against Discrimination

The general prohibitions against discrimination in the rule are generally based on the prohibitions in existing regulations implementing section 504 and, therefore, are already familiar to State and local entities covered by section 504. In addition, §35.130 includes a number of provisions derived from title III of the Act that are implicit to a certain degree in the requirements of regulations implementing section 504.

Several commenters suggested that this part should include the section of the proposed title III regulation that implemented section 309 of the Act, which requires that courses and examinations related to applications, licensing, certification, or credentialing be provided in an accessible place and manner or that alternative accessible arrangements be made. The Department has not adopted this suggestion. The requirements of this part, including the general prohibitions of discrimination in this section, the program access requirements of subpart D, and the communications requirements of subpart E, apply to courses and examinations provided by public entities. The Department considers these requirements to be sufficient to ensure that courses and examinations administered by public entities meet the requirements of section 309. For example, a public entity offering an examination must ensure that modifications of policies, practices, or procedures or the provision of auxiliary aids and services furnish the individual with a disability an equal opportunity to demonstrate his or her knowledge or ability. Also, any examination specially designed for individuals with disabilities must be offered as often and in as timely a manner as are other examinations. Further, under this part, courses and examinations must be offered in the most integrated setting appropriate. The analysis of §35.130(d) is relevant to this determination.

A number of commenters asked that the regulation be amended to require training of law enforcement personnel to recognize the difference between criminal activity and the effects of seizures or other disabilities such as mental retardation, cerebral palsy, traumatic brain injury, mental illness, or deafness. Several disabled commenters gave personal statements about the abuse they had

received at the hands of law enforcement personnel. Two organizations that commented cited the Judiciary report at 50 as authority to require law enforcement training.

The Department has not added such a training requirement to the regulation. Discriminatory arrests and brutal treatment are already unlawful police activities. The general regulatory obligation to modify policies, practices, or procedures requires law enforcement to make changes in policies that result in discriminatory arrests or abuse of individuals with disabilities. Under this section law enforcement personnel would be required to make appropriate efforts to determine whether perceived strange or disruptive behavior or unconsciousness is the result of a disability. The Department notes that a number of States have attempted to address the problem of arresting disabled persons for noncriminal conduct resulting from their disability through adoption of the Uniform Duties to Disabled Persons Act, and encourages other jurisdictions to consider that approach.

Paragraph (a) restates the nondiscrimination mandate of section 202 of the ADA. The remaining paragraphs in §35.130 establish the general principles for analyzing whether any particular action of the public entity violates this mandate.

Paragraph (b) prohibits overt denials of equal treatment of individuals with disabilities. A public entity may not refuse to provide an individual with a disability with an equal opportunity to participate in or benefit from its program simply because the person has a disability.

Paragraph (b)(1)(i) provides that it is discriminatory to deny a person with a disability the right to participate in or benefit from the aid, benefit, or service provided by a public entity. Paragraph (b)(1)(ii) provides that the aids, benefits, and services provided to persons with disabilities must be equal to those provided to others, and paragraph (b)(1)(iii) requires that the aids, benefits, or services provided to individuals with disabilities must be as effective in affording equal opportunity to obtain the same result, to gain the same benefit, or to reach the same level of achievement as those provided to others. These paragraphs are taken from the regulations implementing section 504 and simply restate principles long established under section 504.

Paragraph (b)(1)(iv) permits the public entity to develop separate or different aids, benefits, or services when necessary to provide individuals with disabilities with an equal opportunity to participate in or benefit from the public entity's programs or activities, but only when necessary to ensure that the aids, benefits, or services are as effective as those provided to others. Paragraph (b)(1)(iv) must be read in conjunction with paragraphs (b)(2), (d), and (e). Even when separate or different aids, benefits, or services would be more effective, paragraph (b)(2) provides that a qualified individual with a disability still has the right to choose to participate in the program that is not designed to accommodate individuals with disabilities. Paragraph (d) requires that a public entity administer services, programs, and activities in the most integrated setting appropriate to the needs of qualified individuals with disabilities.

Paragraph (b)(2) specifies that, notwithstanding the existence of separate or different programs or activities provided in accordance with this section, an individual with a disability shall not be denied the opportunity to participate in such programs or activities that are not separate or different. Paragraph (e), which is derived from section 501(d) of the Americans with Disabilities Act, states that nothing in this part shall be construed to require an individual with a disability to accept an accommodation, aid, service, opportunity, or benefit that he or she chooses not to accept.

Taken together, these provisions are intended to prohibit exclusion and segregation of individuals with disabilities and the denial of equal opportunities enjoyed by others, based on, among other things, presumptions, patronizing attitudes, fears, and stereotypes about individuals with disabilities. Consistent with these standards, public entities are required to ensure that their actions are based on facts applicable to individuals and not on presumptions as to what a class of individuals with disabilities can or cannot do.

Integration is fundamental to the purposes of the Americans with Disabilities Act. Provision of segregated accommodations and services relegates persons with disabilities to second-class status. For example, it would be a violation of this provision to require persons with disabilities to eat in the back room of a government cafeteria or to refuse to allow a person with a disability the full use of recreation or exercise facilities because of stereotypes about the person's ability to participate.

Many commenters objected to proposed paragraphs (b)(1)(iv) and (d) as allowing continued segregation of individuals with disabilities. The Department recognizes that promoting integration of individuals with disabilities into the mainstream of society is an important objective of the ADA and agrees that, in most instances, separate programs for individuals with disabilities will not be permitted. Nevertheless, section 504 does permit separate programs in limited circumstances, and Congress clearly intended the regulations issued under title II to adopt the standards of section 504. Furthermore, Congress included authority for

separate programs in the specific requirements of title III of the Act. Section 302(b)(1)(A)(iii) of the Act provides for separate benefits in language similar to that in §35.130(b)(1)(iv), and section 302(b)(1)(B) includes the same requirement for ''the most integrated setting appropriate'' as in §35.130(d).

Even when separate programs are permitted, individuals with disabilities cannot be denied the opportunity to participate in programs that are not separate or different. This is an important and overarching principle of the Americans with Disabilities Act. Separate, special, or different programs that are designed to provide a benefit to persons with disabilities cannot be used to restrict the participation of persons with disabilities in general, integrated activities.

For example, a person who is blind may wish to decline participating in a special museum tour that allows persons to touch sculptures in an exhibit and instead tour the exhibit at his or her own pace with the museum's recorded tour. It is not the intent of this section to require the person who is blind to avail himself or herself of the special tour. Modified participation for persons with disabilities must be a choice, not a requirement.

In addition, it would not be a violation of this section for a public entity to offer recreational programs specially designed for children with mobility impairments. However, it would be a violation of this section if the entity then excluded these children from other recreational services for which they are qualified to participate when these services are made available to nondisabled children, or if the entity required children with disabilities to attend only designated programs.

Many commenters asked that the Department clarify a public entity's obligations within the integrated program when it offers a separate program but an individual with a disability chooses not to participate in the separate program. It is impossible to make a blanket statement as to what level of auxiliary aids or modifications would be required in the integrated program. Rather, each situation must be assessed individually. The starting point is to question whether the separate program is in fact necessary or appropriate for the individual. Assuming the separate program would be appropriate for a particular individual, the extent to which that individual must be provided with modifications in the integrated program will depend not only on what the individual needs but also on the limitations and defenses of this part. For example, it may constitute an undue burden for a public accommodation, which provides a full-time interpreter in its special guided tour for individuals with hearing impairments, to hire an additional interpreter for those individuals who choose to attend the integrated program. The Department cannot identify categorically the level of assistance or aid required in the integrated program.

Paragraph (b)(1)(v) provides that a public entity may not aid or perpetuate discrimination against a qualified individual with a disability by providing significant assistance to an agency, organization, or person that discriminates on the basis of disability in providing any aid, benefit, or service to beneficiaries of the public entity's program. This paragraph is taken from the regulations implementing section 504 for federally assisted programs.

Paragraph (b)(1)(vi) prohibits the public entity from denying a qualified individual with a disability the opportunity to participate as a member of a planning or advisory board.

Paragraph (b)(1)(vii) prohibits the public entity from limiting a qualified individual with a disability in the enjoyment of any right, privilege, advantage, or opportunity enjoyed by others receiving any aid, benefit, or service.

Paragraph (b)(3) prohibits the public entity from utilizing criteria or methods of administration that deny individuals with disabilities access to the public entity's services, programs, and activities or that perpetuate the discrimination of another public entity, if both public entities are subject to common administrative control or are agencies of the same State. The phrase ''criteria or methods of administration'' refers to official written policies of the public entity and to the actual practices of the public entity. This paragraph prohibits both blatantly exclusionary policies or practices and nonessential policies and practices that are neutral on their face, but deny individuals with disabilities an effective opportunity to participate. This standard is consistent with the interpretation of section 504 by the U.S. Supreme Court in *Alexander* v. *Choate*, 469 U.S. 287 (1985). The Court in *Choate* explained that members of Congress made numerous statements during passage of section 504 regarding eliminating architectural barriers, providing access to transportation, and eliminating discriminatory effects of job qualification procedures. The Court then noted: ''These statements would ring hollow if the resulting legislation could not rectify the harms resulting from action that discriminated by effect as well as by design.'' *Id.* at 297 (footnote omitted).

Paragraph (b)(4) specifically applies the prohibition enunciated in §35.130(b)(3) to the process of selecting sites for construction of new facilities or selecting existing facilities to be used by the public entity. Paragraph (b)(4) does not apply to construction of additional buildings at an existing site.

Paragraph (b)(5) prohibits the public entity, in the selection of procurement contractors, from using criteria that subject qualified individuals with disabilities to discrimination on the basis of disability.

Paragraph (b)(6) prohibits the public entity from discriminating against qualified individuals with disabilities on the basis of disability in the granting of licenses or certification. A person is a ''qualified individual with a disability'' with respect to licensing or certification if he or she can meet the essential eligibility requirements for receiving the license or certification (see §35.104).

A number of commenters were troubled by the phrase ''essential eligibility requirements'' as applied to State licensing requirements, especially those for health care professions. Because of the variety of types of programs to which the definition of ''qualified individual with a disability'' applies, it is not possible to use more specific language in the definition. The phrase ''essential eligibility requirements,'' however, is taken from the definitions in the regulations implementing section 504, so caselaw under section 504 will be applicable to its interpretation. In *Southeastern Community College* v. *Davis,* 442 U.S. 397, for example, the Supreme Court held that section 504 does not require an institution to ''lower or effect substantial modifications of standards to accommodate a handicapped person,'' 442 U.S. at 413, and that the school had established that the plaintiff was not ''qualified'' because she was not able to ''serve the nursing profession in all customary ways,'' *id.* Whether a particular requirement is ''essential'' will, of course, depend on the facts of the particular case.

In addition, the public entity may not establish requirements for the programs or activities of licensees or certified entities that subject qualified individuals with disabilities to discrimination on the basis of disability. For example, the public entity must comply with this requirement when establishing safety standards for the operations of licensees. In that case the public entity must ensure that standards that it promulgates do not discriminate against the employment of qualified individuals with disabilities in an impermissible manner.

Paragraph (b)(6) does not extend the requirements of the Act or this part directly to the programs or activities of licensees or certified entities themselves. The programs or activities of licensees or certified entities are not themselves programs or activities of the public entity merely by virtue of the license or certificate.

Paragraph (b)(7) is a specific application of the requirement under the general prohibitions of discrimination that public entities make reasonable modifications in policies, practices, or procedures where necessary to avoid discrimination on the basis of disability. Section 302(b)(2)(A)(ii) of the ADA sets out this requirement specifically for public accommodations covered by title III of the Act, and the House Judiciary Committee Report directs the Attorney General to include those specific requirements in the title II regulation to the extent that they do not conflict with the regulations implementing section 504. Judiciary report at 52.

Paragraph (b)(8), a new paragraph not contained in the proposed rule, prohibits the imposition or application of eligibility criteria that screen out or tend to screen out an individual with a disability or any class of individuals with disabilities from fully and equally enjoying any service, program, or activity, unless such criteria can be shown to be necessary for the provision of the service, program, or activity being offered. This prohibition is also a specific application of the general prohibitions of discrimination and is based on section 302(b)(2)(A)(i) of the ADA. It prohibits overt denials of equal treatment of individuals with disabilities, or establishment of exclusive or segregative criteria that would bar individuals with disabilities from participation in services, benefits, or activities.

Paragraph (b)(8) also prohibits policies that unnecessarily impose requirements or burdens on individuals with disabilities that are not placed on others. For example, public entities may not require that a qualified individual with a disability be accompanied by an attendant. A public entity is not, however, required to provide attendant care, or assistance in toileting, eating, or dressing to individuals with disabilities, except in special circumstances, such as where the individual is an inmate of a custodial or correctional institution.

In addition, paragraph (b)(8) prohibits the imposition of criteria that ''tend to'' screen out an individual with a disability. This concept, which is derived from current regulations under section 504 (*see, e.g.,* 45 CFR 84.13), makes it discriminatory to impose policies or criteria that, while not creating a direct bar to individuals with disabilities, indirectly prevent or limit their ability to participate. For example, requiring presentation of a driver's license as the sole means of identification for purposes of paying by check would violate this section in situations where, for example, individuals with severe vision impairments or developmental disabilities or epilepsy are ineligible to receive a driver's license and the use of an alternative means of identification, such as another photo I.D. or credit card, is feasible.

A public entity may, however, impose neutral rules and criteria that screen out, or tend to screen out, individuals with disabilities if the criteria are necessary for the safe operation of the program in question. Examples of safety qualifications that would be justifiable in appropriate circumstances

would include eligibility requirements for drivers' licenses, or a requirement that all participants in a recreational rafting expedition be able to meet a necessary level of swimming proficiency. Safety requirements must be based on actual risks and not on speculation, stereotypes, or generalizations about individuals with disabilities.

Paragraph (c) provides that nothing in this part prohibits a public entity from providing benefits, services, or advantages to individuals with disabilities, or to a particular class of individuals with disabilities, beyond those required by this part. It is derived from a provision in the section 504 regulations that permits programs conducted pursuant to Federal statute or Executive order that are designed to benefit only individuals with disabilities or a given class of individuals with disabilities to be limited to those individuals with disabilities. Section 504 ensures that federally assisted programs are made available to all individuals, without regard to disabilities, unless the Federal program under which the assistance is provided is specifically limited to individuals with disabilities or a particular class of individuals with disabilities. Because coverage under this part is not limited to federally assisted programs, paragraph (c) has been revised to clarify that State and local governments may provide special benefits, beyond those required by the nondiscrimination requirements of this part, that are limited to individuals with disabilities or a particular class of individuals with disabilities, without thereby incurring additional obligations to persons without disabilities or to other classes of individuals with disabilities.

Paragraphs (d) and (e), previously referred to in the discussion of paragraph (b)(1)(iv), provide that the public entity must administer services, programs, and activities in the most integrated setting appropriate to the needs of qualified individuals with disabilities, *i.e.*, in a setting that enables individuals with disabilities to interact with nondisabled persons to the fullest extent possible, and that persons with disabilities must be provided the option of declining to accept a particular accommodation.

Some commenters expressed concern that § 35.130(e), which states that nothing in the rule requires an individual with a disability to accept special accommodations and services provided under the ADA, could be interpreted to allow guardians of infants or older people with disabilities to refuse medical treatment for their wards. Section 35.130(e) has been revised to make it clear that paragraph (e) is inapplicable to the concern of the commenters. A new paragraph (e)(2) has been added stating that nothing in the regulation authorizes the representative or guardian of an individual with a disability to decline food, water, medical treatment, or medical services for that individual. New paragraph (e) clarifies that neither the ADA nor the regulation alters current Federal law ensuring the rights of incompetent individuals with disabilities to receive food, water, and medical treatment. See, *e.g.*, Child Abuse Amendments of 1984 (42 U.S.C. 5106a(b)(10), 5106g(10)); Rehabilitation Act of 1973, as amended (29 U.S.C. 794); the Developmentally Disabled Assistance and Bill of Rights Act (42 U.S.C. 6042).

Sections 35.130(e) (1) and (2) are based on section 501(d) of the ADA. Section 501(d) was designed to clarify that nothing in the ADA requires individuals with disabilities to accept special accommodations and services for individuals with disabilities that may segregate them:

> The Committee added this section [501(d)] to clarify that nothing in the ADA is intended to permit discriminatory treatment on the basis of disability, even when such treatment is rendered under the guise of providing an accommodation, service, aid or benefit to the individual with disability. For example, a blind individual may choose not to avail himself or herself of the right to go to the front of a line, even if a particular public accommodation has chosen to offer such a modification of a policy for blind individuals. Or, a blind individual may choose to decline to participate in a special museum tour that allows persons to touch sculptures in an exhibit and instead tour the exhibits at his or her own pace with the museum's recorded tour.

Judiciary report at 71–72. The Act is not to be construed to mean that an individual with disabilities must accept special accommodations and services for individuals with disabilities when that individual can participate in the regular services already offered. Because medical treatment, including treatment for particular conditions, is not a special accommodation or service for individuals with disabilities under section 501(d), neither the Act nor this part provides affirmative authority to suspend such treatment. Section 501(d) is intended to clarify that the Act is not designed to foster discrimination through mandatory acceptance of special services when other alternatives are provided; this concern does not reach to the provision of medical treatment for the disabling condition itself.

Paragraph (f) provides that a public entity may not place a surcharge on a particular individual with a disability, or any group of individuals with disabilities, to cover any costs of measures required to provide that individual or group with the nondiscriminatory treatment required by the Act or this part. Such measures may include the provision of auxiliary aids or of modifications required to provide program accessibility.

Several commenters asked for clarification that the costs of interpreter services may not be assessed as an element of ''court

costs.'' The Department has already recognized that imposition of the cost of courtroom interpreter services is impermissible under section 504. The preamble to the Department's section 504 regulation for its federally assisted programs states that where a court system has an obligation to provide qualified interpreters, ''it has the corresponding responsibility to pay for the services of the interpreters.'' (45 FR 37630 (June 3, 1980)). Accordingly, recouping the costs of interpreter services by assessing them as part of court costs would also be prohibited.

Paragraph (g), which prohibits discrimination on the basis of an individual's or entity's known relationship or association with an individual with a disability, is based on sections 102(b)(4) and 302(b)(1)(E) of the ADA. This paragraph was not contained in the proposed rule. The individuals covered under this paragraph are any individuals who are discriminated against because of their known association with an individual with a disability. For example, it would be a violation of this paragraph for a local government to refuse to allow a theater company to use a school auditorium on the grounds that the company had recently performed for an audience of individuals with HIV disease.

This protection is not limited to those who have a familial relationship with the individual who has a disability. Congress considered, and rejected, amendments that would have limited the scope of this provision to specific associations and relationships. Therefore, if a public entity refuses admission to a person with cerebral palsy and his or her companions, the companions have an independent right of action under the ADA and this section.

During the legislative process, the term ''entity'' was added to section 302(b)(1)(E) to clarify that the scope of the provision is intended to encompass not only persons who have a known association with a person with a disability, but also entities that provide services to or are otherwise associated with such individuals. This provision was intended to ensure that entities such as health care providers, employees of social service agencies, and others who provide professional services to persons with disabilities are not subjected to discrimination because of their professional association with persons with disabilities.

Section 35.131 Illegal Use of Drugs

Section 35.131 effectuates section 510 of the ADA, which clarifies the Act's application to people who use drugs illegally. Paragraph (a) provides that this part does not prohibit discrimination based on an individual's current illegal use of drugs.

The Act and the regulation distinguish between illegal use of drugs and the legal use of substances, whether or not those substances are ''controlled substances,'' as defined in the Controlled Substances Act (21 U.S.C. 812). Some controlled substances are prescription drugs that have legitimate medical uses. Section 35.131 does not affect use of controlled substances pursuant to a valid prescription under supervision by a licensed health care professional, or other use that is authorized by the Controlled Substances Act or any other provision of Federal law. It does apply to illegal use of those substances, as well as to illegal use of controlled substances that are not prescription drugs. The key question is whether the individual's use of the substance is illegal, not whether the substance has recognized legal uses. Alcohol is not a controlled substance, so use of alcohol is not addressed by §35.131 (although alcoholics are individuals with disabilities, subject to the protections of the statute).

A distinction is also made between the use of a substance and the status of being addicted to that substance. Addiction is a disability, and addicts are individuals with disabilities protected by the Act. The protection, however, does not extend to actions based on the illegal use of the substance. In other words, an addict cannot use the fact of his or her addiction as a defense to an action based on illegal use of drugs. This distinction is not artificial. Congress intended to deny protection to people who engage in the illegal use of drugs, whether or not they are addicted, but to provide protection to addicts so long as they are not currently using drugs.

A third distinction is the difficult one between current use and former use. The definition of ''current illegal use of drugs'' in §35.104, which is based on the report of the Conference Committee, H.R. Conf. Rep. No. 596, 101st Cong., 2d Sess. 64 (1990) (hereinafter ''Conference report''), is ''illegal use of drugs that occurred recently enough to justify a reasonable belief that a person's drug use is current or that continuing use is a real and ongoing problem.''

Paragraph (a)(2)(i) specifies that an individual who has successfully completed a supervised drug rehabilitation program or has otherwise been rehabilitated successfully and who is not engaging in current illegal use of drugs is protected. Paragraph (a)(2)(ii) clarifies that an individual who is currently participating in a supervised rehabilitation program and is not engaging in current illegal use of drugs is protected. Paragraph (a)(2)(iii) provides that a person who is erroneously regarded as engaging in current illegal use of drugs, but who is not engaging in such use, is protected.

Paragraph (b) provides a limited exception to the exclusion of current illegal users of drugs from the protections of the Act. It prohibits denial of health services, or services provided in connection with drug rehabilitation to an individual on the basis of current

illegal use of drugs, if the individual is otherwise entitled to such services. A health care facility, such as a hospital or clinic, may not refuse treatment to an individual in need of the services it provides on the grounds that the individual is illegally using drugs, but it is not required by this section to provide services that it does not ordinarily provide. For example, a health care facility that specializes in a particular type of treatment, such as care of burn victims, is not required to provide drug rehabilitation services, but it cannot refuse to treat an individual's burns on the grounds that the individual is illegally using drugs.

Some commenters pointed out that abstention from the use of drugs is an essential condition of participation in some drug rehabilitation programs, and may be a necessary requirement in inpatient or residential settings. The Department believes that this comment is well-founded. Congress clearly intended to prohibit exclusion from drug treatment programs of the very individuals who need such programs because of their use of drugs, but, once an individual has been admitted to a program, abstention may be a necessary and appropriate condition to continued participation. The final rule therefore provides that a drug rehabilitation or treatment program may prohibit illegal use of drugs by individuals while they are participating in the program.

Paragraph (c) expresses Congress' intention that the Act be neutral with respect to testing for illegal use of drugs. This paragraph implements the provision in section 510(b) of the Act that allows entities ''to adopt or administer reasonable policies or procedures, including but not limited to drug testing,'' that ensure that an individual who is participating in a supervised rehabilitation program, or who has completed such a program or otherwise been rehabilitated successfully is no longer engaging in the illegal use of drugs. The section is not to be ''construed to encourage, prohibit, restrict, or authorize the conducting of testing for the illegal use of drugs.''

Paragraph 35.131(c) clarifies that it is not a violation of this part to adopt or administer reasonable policies or procedures to ensure that an individual who formerly engaged in the illegal use of drugs is not currently engaging in illegal use of drugs. Any such policies or procedures must, of course, be reasonable, and must be designed to identify accurately the illegal use of drugs. This paragraph does not authorize inquiries, tests, or other procedures that would disclose use of substances that are not controlled substances or are taken under supervision by a licensed health care professional, or other uses authorized by the Controlled Substances Act or other provisions of Federal law, because such uses are not included in the definition of ''illegal use of drugs.'' A commenter argued that the rule should permit testing for lawful use of prescription drugs, but most commenters preferred that tests must be limited to unlawful use in order to avoid revealing the lawful use of prescription medicine used to treat disabilities.

Section 35.132 Smoking

Section 35.132 restates the clarification in section 501(b) of the Act that the Act does not preclude the prohibition of, or imposition of restrictions on, smoking in transportation covered by title II. Some commenters argued that this section is too limited in scope, and that the regulation should prohibit smoking in all facilities used by public entities. The reference to smoking in section 501, however, merely clarifies that the Act does not require public entities to accommodate smokers by permitting them to smoke in transportation facilities.

Section 35.133 Maintenance of Accessible Features

Section 35.133 provides that a public entity shall maintain in operable working condition those features of facilities and equipment that are required to be readily accessible to and usable by persons with disabilities by the Act or this part. The Act requires that, to the maximum extent feasible, facilities must be accessible to, and usable by, individuals with disabilities. This section recognizes that it is not sufficient to provide features such as accessible routes, elevators, or ramps, if those features are not maintained in a manner that enables individuals with disabilities to use them. Inoperable elevators, locked accessible doors, or ''accessible'' routes that are obstructed by furniture, filing cabinets, or potted plants are neither ''accessible to'' nor ''usable by'' individuals with disabilities.

Some commenters objected that this section appeared to establish an absolute requirement and suggested that language from the preamble be included in the text of the regulation. It is, of course, impossible to guarantee that mechanical devices will never fail to operate. Paragraph (b) of the final regulation provides that this section does not prohibit isolated or temporary interruptions in service or access due to maintenance or repairs. This paragraph is intended to clarify that temporary obstructions or isolated instances of mechanical failure would not be considered violations of the Act or this part. However, allowing obstructions or ''out of service'' equipment to persist beyond a reasonable period of time would violate this part, as would repeated mechanical failures due to improper or inadequate maintenance. Failure of the public entity to ensure that accessible routes are

properly maintained and free of obstructions, or failure to arrange prompt repair of inoperable elevators or other equipment intended to provide access would also violate this part.

Other commenters requested that this section be expanded to include specific requirements for inspection and maintenance of equipment, for training staff in the proper operation of equipment, and for maintenance of specific items. The Department believes that this section properly establishes the general requirement for maintaining access and that further details are not necessary.

Section 35.134 Retaliation or Coercion

Section 35.134 implements section 503 of the ADA, which prohibits retaliation against any individual who exercises his or her rights under the Act. This section is unchanged from the proposed rule. Paragraph (a) of §35.134 provides that no private or public entity shall discriminate against any individual because that individual has exercised his or her right to oppose any act or practice made unlawful by this part, or because that individual made a charge, testified, assisted, or participated in any manner in an investigation, proceeding, or hearing under the Act or this part.

Paragraph (b) provides that no private or public entity shall coerce, intimidate, threaten, or interfere with any individual in the exercise of his or her rights under this part or because that individual aided or encouraged any other individual in the exercise or enjoyment of any right granted or protected by the Act or this part.

This section protects not only individuals who allege a violation of the Act or this part, but also any individuals who support or assist them. This section applies to all investigations or proceedings initiated under the Act or this part without regard to the ultimate resolution of the underlying allegations. Because this section prohibits any act of retaliation or coercion in response to an individual's effort to exercise rights established by the Act and this part (or to support the efforts of another individual), the section applies not only to public entities subject to this part, but also to persons acting in an individual capacity or to private entities. For example, it would be a violation of the Act and this part for a private individual to harass or intimidate an individual with a disability in an effort to prevent that individual from attending a concert in a State-owned park. It would, likewise, be a violation of the Act and this part for a private entity to take adverse action against an employee who appeared as a witness on behalf of an individual who sought to enforce the Act.

Section 35.135 Personal Devices and Services

The final rule includes a new §35.135, entitles ''Personal devices and services,'' which states that the provision of personal devices and services is not required by title II. This new section, which serves as a limitation on all of the requirements of the regulation, replaces §35.160(b)(2) of the proposed rule, which addressed the issue of personal devices and services explicitly only in the context of communications. The personal devices and services limitation was intended to have general application in the proposed rule in all contexts where it was relevant. The final rule, therefore, clarifies this point by including a general provision that will explicitly apply not only to auxiliary aids and services but across-the-board to include other relevant areas such as, for example, modifications in policies, practices, and procedures (§35.130(b)(7)). The language of §35.135 parallels an analogous provision in the Department's title III regulations (28 CFR 36.306) but preserves the explicit reference to ''readers for personal use or study'' in §35.160(b)(2) of the proposed rule. This section does not preclude the short-term loan of personal receivers that are part of an assistive listening system.

Subpart C—Employment

Section 35.140 Employment Discrimination Prohibited

Title II of the ADA applies to all activities of public entities, including their employment practices. The proposed rule cross-referenced the definitions, requirements, and procedures of title I of the ADA, as established by the Equal Employment Opportunity Commission in 29 CFR part 1630. This proposal would have resulted in use, under §35.140, of the title I definition of ''employer,'' so that a public entity with 25 or more employees would have become subject to the requirements of §35.140 on July 26, 1992, one with 15 to 24 employees on July 26, 1994, and one with fewer than 15 employees would have been excluded completely.

The Department received comments objecting to this approach. The commenters asserted that Congress intended to establish nondiscrimination requirements for employment by all public entities, including those that employ fewer than 15 employees; and that Congress intended the employment requirements of title II to become effective at the same time that the other requirements of this regulation become effective, January 26, 1992. The Department has reexamined the statutory language and legislative history of the ADA on this issue and has concluded that Congress intended to cover the employment practices of all public entities and that the applicable effective date is that of title II.

The statutory language of section 204(b) of the ADA requires the Department to issue a regulation that is consistent with the ADA and the Department's coordination regulation under section 504, 28 CFR part 41. The coordination regulation specifically requires nondiscrimination in employment, 28 CFR 41.52–41.55, and does not limit coverage based on size of employer. Moreover, under all section 504 implementing regulations issued in accordance with the Department's coordination regulation, employment coverage under section 504 extends to all employers with federally assisted programs or activities, regardless of size, and the effective date for those employment requirements has always been the same as the effective date for nonemployment requirements established in the same regulations. The Department therefore concludes that § 35.140 must apply to all public entities upon the effective date of this regulation.

In the proposed regulation the Department cross-referenced the regulations implementing title I of the ADA, issued by the Equal Employment Opportunity Commission at 29 CFR part 1630, as a compliance standard for § 35.140 because, as proposed, the scope of coverage and effective date of coverage under title II would have been coextensive with title I. In the final regulation this language is modified slightly. Subparagraph (1) of new paragraph (b) makes it clear that the standards established by the Equal Employment Opportunity Commission in 29 CFR part 1630 will be the applicable compliance standards if the public entity is subject to title I. If the public entity is not covered by title I, or until it is covered by title I, subparagraph (b)(2) cross-references section 504 standards for what constitutes employment discrimination, as established by the Department of Justice in 28 CFR part 41. Standards for title I of the ADA and section 504 of the Rehabilitation Act are for the most part identical because title I of the ADA was based on requirements set forth in regulations implementing section 504.

The Department, together with the other Federal agencies responsible for the enforcement of Federal laws prohibiting employment discrimination on the basis of disability, recognizes the potential for jurisdictional overlap that exists with respect to coverage of public entities and the need to avoid problems related to overlapping coverage. The other Federal agencies include the Equal Employment Opportunity Commission, which is the agency primarily responsible for enforcement of title I of the ADA, the Department of Labor, which is the agency responsible for enforcement of section 503 of the Rehabilitation Act of 1973, and 26 Federal agencies with programs of Federal financial assistance, which are responsible for enforcing section 504 in those programs. Section 107 of the ADA requires that coordination mechanisms be developed in connection with the administrative enforcement of complaints alleging discrimination under title I and complaints alleging discrimination in employment in violation of the Rehabilitation Act. Although the ADA does not specifically require inclusion of employment complaints under title II in the coordinating mechanisms required by title I, Federal investigations of title II employment complaints will be coordinated on a government-wide basis also. The Department is currently working with the EEOC and other affected Federal agencies to develop effective coordinating mechanisms, and final regulations on this issue will be issued on or before January 26, 1992.

Subpart D—Program Accessibility

Section 35.149 Discrimination Prohibited

Section 35.149 states the general nondiscrimination principle underlying the program accessibility requirements of §§ 35.150 and 35.151.

Section 35.150 Existing Facilities

Consistent with section 204(b) of the Act, this regulation adopts the program accessibility concept found in the section 504 regulations for federally conducted programs or activities (e.g., 28 CFR part 39). The concept of ''program accessibility'' was first used in the section 504 regulation adopted by the Department of Health, Education, and Welfare for its federally assisted programs and activities in 1977. It allowed recipients to make their federally assisted programs and activities available to individuals with disabilities without extensive retrofitting of their existing buildings and facilities, by offering those programs through alternative methods. Program accessibility has proven to be a useful approach and was adopted in the regulations issued for programs and activities conducted by Federal Executive agencies. The Act provides that the concept of program access will continue to apply with respect to facilities now in existence, because the cost of retrofitting existing facilities is often prohibitive.

Section 35.150 requires that each service, program, or activity conducted by a public entity, when viewed in its entirety, be readily accessible to and usable by individuals with disabilities. The regulation makes clear, however, that a public entity is not required to make each of its existing facilities accessible (§ 35.150(a)(1)). Unlike title III of the Act, which requires public accommodations to remove architectural barriers where such removal is ''readily achievable,'' or to provide goods and services through alternative methods, where those methods are ''readily achievable,'' title II requires a public entity to make its programs accessible in all cases, except where to do so would result

in a fundamental alteration in the nature of the program or in undue financial and administrative burdens. Congress intended the ''undue burden'' standard in title II to be significantly higher than the ''readily achievable'' standard in title III. Thus, although title II may not require removal of barriers in some cases where removal would be required under title III, the program access requirement of title II should enable individuals with disabilities to participate in and benefit from the services, programs, or activities of public entities in all but the most unusual cases.

Paragraph (a)(2), which establishes a special limitation on the obligation to ensure program accessibility in historic preservation programs, is discussed below in connection with paragraph (b).

Paragraph (a)(3), which is taken from the section 504 regulations for federally conducted programs, generally codifies case law that defines the scope of the public entity's obligation to ensure program accessibility. This paragraph provides that, in meeting the program accessibility requirement, a public entity is not required to take any action that would result in a fundamental alteration in the nature of its service, program, or activity or in undue financial and administrative burdens. A similar limitation is provided in §35.164.

This paragraph does not establish an absolute defense; it does not relieve a public entity of all obligations to individuals with disabilities. Although a public entity is not required to take actions that would result in a fundamental alteration in the nature of a service, program, or activity or in undue financial and administrative burdens, it nevertheless must take any other steps necessary to ensure that individuals with disabilities receive the benefits or services provided by the public entity.

It is the Department's view that compliance with §35.150(a), like compliance with the corresponding provisions of the section 504 regulations for federally conducted programs, would in most cases not result in undue financial and administrative burdens on a public entity. In determining whether financial and administrative burdens are undue, all public entity resources available for use in the funding and operation of the service, program, or activity should be considered. The burden of proving that compliance with paragraph (a) of §35.150 would fundamentally alter the nature of a service, program, or activity or would result in undue financial and administrative burdens rests with the public entity.

The decision that compliance would result in such alteration or burdens must be made by the head of the public entity or his or her designee and must be accompanied by a written statement of the reasons for reaching that conclusion. The Department recognizes the difficulty of identifying the official responsible for this determination, given the variety of organizational forms that may be taken by public entities and their components. The intention of this paragraph is that the determination must be made by a high level official, no lower than a Department head, having budgetary authority and responsibility for making spending decisions.

Any person who believes that he or she or any specific class of persons has been injured by the public entity head's decision or failure to make a decision may file a complaint under the compliance procedures established in subpart F.

Paragraph (b)(1) sets forth a number of means by which program accessibility may be achieved, including redesign of equipment, reassignment of services to accessible buildings, and provision of aides.

The Department wishes to clarify that, consistent with longstanding interpretation of section 504, carrying an individual with a disability is considered an ineffective and therefore an unacceptable method for achieving program accessibility. Department of Health, Education, and Welfare, Office of Civil Rights, Policy Interpretation No. 4, 43 FR 36035 (August 14, 1978). Carrying will be permitted only in manifestly exceptional cases, and only if all personnel who are permitted to participate in carrying an individual with a disability are formally instructed on the safest and least humiliating means of carrying. ''Manifestly exceptional'' cases in which carrying would be permitted might include, for example, programs conducted in unique facilities, such as an oceanographic vessel, for which structural changes and devices necessary to adapt the facility for use by individuals with mobility impairments are unavailable or prohibitively expensive. Carrying is not permitted as an alternative to structural modifications such as installation of a ramp or a chairlift.

In choosing among methods, the public entity shall give priority consideration to those that will be consistent with provision of services in the most integrated setting appropriate to the needs of individuals with disabilities. Structural changes in existing facilities are required only when there is no other feasible way to make the public entity's program accessible. (It should be noted that ''structural changes'' include all physical changes to a facility; the term does not refer only to changes to structural features, such as removal of or alteration to a load-bearing structural member.) The requirements of §35.151 for alterations apply to structural changes undertaken to comply with this section. The public entity may comply with the program accessibility requirement by delivering services at alternate accessible sites or making home visits as appropriate.

Historic Preservation Programs

In order to avoid possible conflict between the congressional mandates to preserve historic properties, on the one hand, and to eliminate discrimination against individuals with disabilities on the other, paragraph (a)(2) provides that a public entity is not required to take any action that would threaten or destroy the historic significance of an historic property. The special limitation on program accessibility set forth in paragraph (a)(2) is applicable only to historic preservation programs, as defined in §35.104, that is, programs that have preservation of historic properties as a primary purpose. Narrow application of the special limitation is justified because of the inherent flexibility of the program accessibility requirement. Where historic preservation is not a primary purpose of the program, the public entity is not required to use a particular facility. It can relocate all or part of its program to an accessible facility, make home visits, or use other standard methods of achieving program accessibility without making structural alterations that might threaten or destroy significant historic features of the historic property. Thus, government programs located in historic properties, such as an historic State capitol, are not excused from the requirement for program access.

Paragraph (a)(2), therefore, will apply only to those programs that uniquely concern the preservation and experience of the historic property itself. Because the primary benefit of an historic preservation program is the experience of the historic property, paragraph (b)(2) requires the public entity to give priority to methods of providing program accessibility that permit individuals with disabilities to have physical access to the historic property. This priority on physical access may also be viewed as a specific application of the general requirement that the public entity administer programs in the most integrated setting appropriate to the needs of qualified individuals with disabilities (§35.130(d)). Only when providing physical access would threaten or destroy the historic significance of an historic property, or would result in a fundamental alteration in the nature of the program or in undue financial and administrative burdens, may the public entity adopt alternative methods for providing program accessibility that do not ensure physical access. Examples of some alternative methods are provided in paragraph (b)(2).

TIME PERIODS

Paragraphs (c) and (d) establish time periods for complying with the program accessibility requirement. Like the regulations for federally assisted programs (e.g., 28 CFR 41.57(b)), paragraph (c) requires the public entity to make any necessary structural changes in facilities as soon as practicable, but in no event later than three years after the effective date of this regulation.

The proposed rule provided that, aside from structural changes, all other necessary steps to achieve compliance with this part must be taken within sixty days. The sixty day period was taken from regulations implementing section 504, which generally were effective no more than thirty days after publication. Because this regulation will not be effective until January 26, 1992, the Department has concluded that no additional transition period for non-structural changes is necessary, so the sixty day period has been omitted in the final rule. Of course, this section does not reduce or eliminate any obligations that are already applicable to a public entity under section 504.

Where structural modifications are required, paragraph (d) requires that a transition plan be developed by an entity that employs 50 or more persons, within six months of the effective date of this regulation. The legislative history of title II of the ADA makes it clear that, under title II, ''local and state governments are required to provide curb cuts on public streets.'' Education and Labor report at 84. As the rationale for the provision of curb cuts, the House report explains, ''The employment, transportation, and public accommodation sections of * * * (the ADA) would be meaningless if people who use wheelchairs were not afforded the opportunity to travel on and between the streets.'' Id. Section 35.151(e), which establishes accessibility requirements for new construction and alterations, requires that all newly constructed or altered streets, roads, or highways must contain curb ramps or other sloped areas at any intersection having curbs or other barriers to entry from a street level pedestrian walkway, and all newly constructed or altered street level pedestrian walkways must have curb ramps or other sloped areas at intersections to streets, roads, or highways. A new paragraph (d)(2) has been added to the final rule to clarify the application of the general requirement for program accessibility to the provision of curb cuts at existing crosswalks. This paragraph requires that the transition plan include a schedule for providing curb ramps or other sloped areas at existing pedestrian walkways, giving priority to walkways serving entities covered by the Act, including State and local government offices and facilities, transportation, public accommodations, and employers, followed by walkways serving other areas. Pedestrian ''walkways'' include locations where access is required for use of public transportation, such as bus stops that are not located at intersections or crosswalks.

Similarly, a public entity should provide an adequate number of accessible parking

spaces in existing parking lots or garages over which it has jurisdiction.

Paragraph (d)(3) provides that, if a public entity has already completed a transition plan required by a regulation implementing section 504, the transition plan required by this part will apply only to those policies and practices that were not covered by the previous transition plan. Some commenters suggested that the transition plan should include all aspects of the public entity's operations, including those that may have been covered by a previous transition plan under section 504. The Department believes that such a duplicative requirement would be inappropriate. Many public entities may find, however, that it will be simpler to include all of their operations in the transition plan than to attempt to identify and exclude specifically those that were addressed in a previous plan. Of course, entities covered under section 504 are not shielded from their obligations under that statute merely because they are included under the transition plan developed under this section.

Section 35.151 New Construction and Alterations

Section 35.151 provides that those buildings that are constructed or altered by, on behalf of, or for the use of a public entity shall be designed, constructed, or altered to be readily accessible to and usable by individuals with disabilities if the construction was commenced after the effective date of this part. Facilities under design on that date will be governed by this section if the date that bids were invited falls after the effective date. This interpretation is consistent with Federal practice under section 504.

Section 35.151(c) establishes two standards for accessible new construction and alteration. Under paragraph (c), design, construction, or alteration of facilities in conformance with the Uniform Federal Accessibility Standards (UFAS) or with the Americans with Disabilities Act Accessibility Guidelines for Buildings and Facilities (hereinafter ADAAG) shall be deemed to comply with the requirements of this section with respect to those facilities except that, if ADAAG is chosen, the elevator exemption contained at §§36.401(d) and 36.404 does not apply. ADAAG is the standard for private buildings and was issued as guidelines by the Architectural and Transportation Barriers Compliance Board (ATBCB) under title III of the ADA. It has been adopted by the Department of Justice and is published as appendix A to the Department's title III rule in today's FEDERAL REGISTER. Departures from particular requirements of these standards by the use of other methods shall be permitted when it is clearly evident that equivalent access to the facility or part of the facility is thereby provided. Use of two standards is a departure from the proposed rule.

The proposed rule adopted UFAS as the only interim accessibility standard because that standard was referenced by the regulations implementing section 504 of the Rehabilitation Act promulgated by most Federal funding agencies. It is, therefore, familiar to many State and local government entities subject to this rule. The Department, however, received many comments objecting to the adoption of UFAS. Commenters pointed out that, except for the elevator exemption, UFAS is not as stringent as ADAAG. Others suggested that the standard should be the same to lessen confusion.

Section 204(b) of the Act states that title II regulations must be consistent not only with section 504 regulations but also with ''this Act.'' Based on this provision, the Department has determined that a public entity should be entitled to choose to comply either with ADAAG or UFAS.

Public entities who choose to follow ADAAG, however, are not entitled to the elevator exemption contained in title III of the Act and implemented in the title III regulation at §36.401(d) for new construction and §36.404 for alterations. Section 303(b) of title III states that, with some exceptions, elevators are not required in facilities that are less than three stories or have less than 3000 square feet per story. The section 504 standard, UFAS, contains no such exemption. Section 501 of the ADA makes clear that nothing in the Act may be construed to apply a lesser standard to public entities than the standards applied under section 504. Because permitting the elevator exemption would clearly result in application of a lesser standard than that applied under section 504, paragraph (c) states that the elevator exemption does not apply when public entities choose to follow ADAAG. Thus, a two-story courthouse, whether built according to UFAS or ADAAG, must be constructed with an elevator. It should be noted that Congress did not include an elevator exemption for public transit facilities covered by subtitle B of title II, which covers public transportation provided by public entities, providing further evidence that Congress intended that public buildings have elevators.

Section 504 of the ADA requires the ATBCB to issue supplemental Minimum Guidelines and Requirements for Accessible Design of buildings and facilities subject to the Act, including title II. Section 204(c) of the ADA provides that the Attorney General shall promulgate regulations implementing title II that are consistent with the ATBCB's ADA guidelines. The ATBCB has announced its intention to issue title II guidelines in the future. The Department anticipates that, after the ATBCB's title II guidelines have been published, this rule will be amended to adopt new accessibility standards consistent with

the ATBCB's rulemaking. Until that time, however, public entities will have a choice of following UFAS or ADAAG, without the elevator exemption.

Existing buildings leased by the public entity after the effective date of this part are not required by the regulation to meet accessibility standards simply by virtue of being leased. They are subject, however, to the program accessibility standard for existing facilities in §35.150. To the extent the buildings are newly constructed or altered, they must also meet the new construction and alteration requirements of §35.151.

The Department received many comments urging that the Department require that public entities lease only accessible buildings. Federal practice under section 504 has always treated newly leased buildings as subject to the existing facility program accessibility standard. Section 204(b) of the Act states that, in the area of ''program accessibility, existing facilities,'' the title II regulations must be consistent with section 504 regulations. Thus, the Department has adopted the section 504 principles for these types of leased buildings. Unlike the construction of new buildings where architectural barriers can be avoided at little or no cost, the application of new construction standards to an existing building being leased raises the same prospect of retrofitting buildings as the use of an existing Federal facility, and the same program accessibility standard should apply to both owned and leased existing buildings. Similarly, requiring that public entities only lease accessible space would significantly restrict the options of State and local governments in seeking leased space, which would be particularly burdensome in rural or sparsely populated areas.

On the other hand, the more accessible the leased space is, the fewer structural modifications will be required in the future for particular employees whose disabilities may necessitate barrier removal as a reasonable accommodation. Pursuant to the requirements for leased buildings contained in the Minimum Guidelines and Requirements for Accessible Design published under the Architectural Barriers Act by the ATBCB, 36 CFR 1190.34, the Federal Government may not lease a building unless it contains (1) One accessible route from an accessible entrance to those areas in which the principal activities for which the building is leased are conducted, (2) accessible toilet facilities, and (3) accessible parking facilities, if a parking area is included within the lease (36 CFR 1190.34). Although these requirements are not applicable to buildings leased by public entities covered by this regulation, such entities are encouraged to look for the most accessible space available to lease and to attempt to find space complying at least with these minimum Federal requirements.

Section 35.151(d) gives effect to the intent of Congress, expressed in section 504(c) of the Act, that this part recognize the national interest in preserving significant historic structures. Commenters criticized the Department's use of descriptive terms in the proposed rule that are different from those used in the ADA to describe eligible historic properties. In addition, some commenters criticized the Department's decision to use the concept of ''substantially impairing'' the historic features of a property, which is a concept employed in regulations implementing section 504 of the Rehabilitation Act of 1973. Those commenters recommended that the Department adopt the criteria of ''adverse effect'' published by the Advisory Council on Historic Preservation under the National Historic Preservation Act, 36 CFR 800.9, as the standard for determining whether an historic property may be altered.

The Department agrees with these comments to the extent that they suggest that the language of the rule should conform to the language employed by Congress in the ADA. A definition of ''historic property,'' drawn from section 504 of the ADA, has been added to §35.104 to clarify that the term applies to those properties listed or eligible for listing in the National Register of Historic Places, or properties designated as historic under State or local law.

The Department intends that the exception created by this section be applied only in those very rare situations in which it is not possible to provide access to an historic property using the special access provisions established by UFAS and ADAAG. Therefore, paragraph (d)(1) of §35.151 has been revised to clearly state that alterations to historic properties shall comply, to the maximum extent feasible, with section 4.1.7 of UFAS or section 4.1.7 of ADAAG. Paragraph (d)(2) has been revised to provide that, if it has been determined under the procedures established in UFAS and ADAAG that it is not feasible to provide physical access to an historic property in a manner that will not threaten or destroy the historic significance of the property, alternative methods of access shall be provided pursuant to the requirements of §35.150.

In response to comments, the Department has added to the final rule a new paragraph (e) setting out the requirements of §36.151 as applied to curb ramps. Paragraph (e) is taken from the statement contained in the preamble to the proposed rule that all newly constructed or altered streets, roads, and highways must contain curb ramps at any intersection having curbs or other barriers to entry from a street level pedestrian walkway, and that all newly constructed or altered street level pedestrian walkways must have curb ramps at intersections to streets, roads, or highways.

Subpart E—Communications

Section 35.160 General

Section 35.160 requires the public entity to take such steps as may be necessary to ensure that communications with applicants, participants, and members of the public with disabilities are as effective as communications with others.

Paragraph (b)(1) requires the public entity to furnish appropriate auxiliary aids and services when necessary to afford an individual with a disability an equal opportunity to participate in, and enjoy the benefits of, the public entity's service, program, or activity. The public entity must provide an opportunity for individuals with disabilities to request the auxiliary aids and services of their choice. This expressed choice shall be given primary consideration by the public entity (§35.160(b)(2)). The public entity shall honor the choice unless it can demonstrate that another effective means of communication exists or that use of the means chosen would not be required under §35.164.

Deference to the request of the individual with a disability is desirable because of the range of disabilities, the variety of auxiliary aids and services, and different circumstances requiring effective communication. For instance, some courtrooms are now equipped for ''computer-assisted transcripts,'' which allow virtually instantaneous transcripts of courtroom argument and testimony to appear on displays. Such a system might be an effective auxiliary aid or service for a person who is deaf or has a hearing loss who uses speech to communicate, but may be useless for someone who uses sign language.

Although in some circumstances a notepad and written materials may be sufficient to permit effective communication, in other circumstances they may not be sufficient. For example, a qualified interpreter may be necessary when the information being communicated is complex, or is exchanged for a lengthy period of time. Generally, factors to be considered in determining whether an interpreter is required include the context in which the communication is taking place, the number of people involved, and the importance of the communication.

Several commenters asked that the rule clarify that the provision of readers is sometimes necessary to ensure access to a public entity's services, programs or activities. Reading devices or readers should be provided when necessary for equal participation and opportunity to benefit from any governmental service, program, or activity, such as reviewing public documents, examining demonstrative evidence, and filling out voter registration forms or forms needed to receive public benefits. The importance of providing qualified readers for examinations administered by public entities is discussed under §35.130. Reading devices and readers are appropriate auxiliary aids and services where necessary to permit an individual with a disability to participate in or benefit from a service, program, or activity.

Section 35.160(b)(2) of the proposed rule, which provided that a public entity need not furnish individually prescribed devices, readers for personal use or study, or other devices of a personal nature, has been deleted in favor of a new section in the final rule on personal devices and services (see §35.135).

In response to comments, the term ''auxiliary aids and services'' is used in place of ''auxiliary aids'' in the final rule. This phrase better reflects the range of aids and services that may be required under this section.

A number of comments raised questions about the extent of a public entity's obligation to provide access to television programming for persons with hearing impairments. Television and videotape programming produced by public entities are covered by this section. Access to audio portions of such programming may be provided by closed captioning.

Section 35.161 Telecommunication Devices for the Deaf (TDD's)

Section 35.161 requires that, where a public entity communicates with applicants and beneficiaries by telephone, TDD's or equally effective telecommunication systems be used to communicate with individuals with impaired speech or hearing.

Problems arise when a public entity which does not have a TDD needs to communicate with an individual who uses a TDD or vice versa. Title IV of the ADA addresses this problem by requiring establishment of telephone relay services to permit communications between individuals who communicate by TDD and individuals who communicate by the telephone alone. The relay services required by title IV would involve a relay operator using both a standard telephone and a TDD to type the voice messages to the TDD user and read the TDD messages to the standard telephone user.

Section 204(b) of the ADA requires that the regulation implementing title II with respect to communications be consistent with the Department's regulation implementing section 504 for its federally conducted programs and activities at 28 CFR part 39. Section 35.161, which is taken from §39.160(a)(2) of that regulation, requires the use of TDD's or equally effective telecommunication systems for communication with people who use TDD's. Of course, where relay services, such as those required by title IV of the ADA are available, a public entity may use those services to meet the requirements of this section.

Many commenters were concerned that public entities should not rely heavily on the

establishment of relay services. The commenters explained that while relay services would be of vast benefit to both public entities and individuals who use TDD's, the services are not sufficient to provide access to all telephone services. First, relay systems do not provide effective access to the increasingly popular automated systems that require the caller to respond by pushing a button on a touch tone phone. Second, relay systems cannot operate fast enough to convey messages on answering machines, or to permit a TDD user to leave a recorded message. Third, communication through relay systems may not be appropriate in cases of crisis lines pertaining to rape, domestic violence, child abuse, and drugs. The Department believes that it is more appropriate for the Federal Communications Commission to address these issues in its rulemaking under title IV.

Some commenters requested that those entities with frequent contacts with clients who use TDD's have on-site TDD's to provide for direct communication between the entity and the individual. The Department encourages those entities that have extensive telephone contact with the public such as city halls, public libraries, and public aid offices, to have TDD's to insure more immediate access. Where the provision of telephone service is a major function of the entity, TDD's should be available.

Section 35.162 Telephone Emergency Services

Many public entities provide telephone emergency services by which individuals can seek immediate assistance from police, fire, ambulance, and other emergency services. These telephone emergency services—including ''911'' services—are clearly an important public service whose reliability can be a matter of life or death. The legislative history of title II specifically reflects congressional intent that public entities must ensure that telephone emergency services, including 911 services, be accessible to persons with impaired hearing and speech through telecommunication technology (Conference report at 67; Education and Labor report at 84–85).

Proposed §35.162 mandated that public entities provide emergency telephone services to persons with disabilities that are ''functionally equivalent'' to voice services provided to others. Many commenters urged the Department to revise the section to make clear that direct access to telephone emergency services is required by title II of the ADA as indicated by the legislative history (Conference report at 67–68; Education and Labor report at 85). In response, the final rule mandates ''direct access,'' instead of ''access that is functionally equivalent'' to that provided to all other telephone users. Telephone emergency access through a third party or through a relay service would not satisfy the requirement for direct access.

Several commenters asked about a separate seven-digit emergency call number for the 911 services. The requirement for direct access disallows the use of a separate seven-digit number where 911 service is available. Separate seven-digit emergency call numbers would be unfamiliar to many individuals and also more burdensome to use. A standard emergency 911 number is easier to remember and would save valuable time spent in searching in telephone books for a local seven-digit emergency number.

Many commenters requested the establishment of minimum standards of service (e.g., the quantity and location of TDD's and computer modems needed in a given emergency center). Instead of establishing these scoping requirements, the Department has established a performance standard through the mandate for direct access.

Section 35.162 requires public entities to take appropriate steps, including equipping their emergency systems with modern technology, as may be necessary to promptly receive and respond to a call from users of TDD's and computer modems. Entities are allowed the flexibility to determine what is the appropriate technology for their particular needs. In order to avoid mandating use of particular technologies that may become outdated, the Department has eliminated the references to the Baudot and ASCII formats in the proposed rule.

Some commenters requested that the section require the installation of a voice amplification device on the handset of the dispatcher's telephone to amplify the dispatcher's voice. In an emergency, a person who has a hearing loss may be using a telephone that does not have an amplification device. Installation of speech amplification devices on the handsets of the dispatchers' telephones would respond to that situation. The Department encourages their use.

Several commenters emphasized the need for proper maintenance of TDD's used in telephone emergency services. Section 35.133, which mandates maintenance of accessible features, requires public entities to maintain in operable working condition TDD's and other devices that provide direct access to the emergency system.

Section 35.163 Information and Signage

Section 35.163(a) requires the public entity to provide information to individuals with disabilities concerning accessible services, activities, and facilities. Paragraph (b) requires the public entity to provide signage at all inaccessible entrances to each of its facilities that directs users to an accessible entrance or to a location with information about accessible facilities.

Several commenters requested that, where TDD-equipped pay phones or portable TDD's

exist, clear signage should be posted indicating the location of the TDD. The Department believes that this is required by paragraph (a). In addition, the Department recommends that, in large buildings that house TDD's, directional signage indicating the location of available TDD's should be placed adjacent to banks of telephones that do not contain a TDD.

Section 35.164 Duties

Section 35.164, like paragraph (a)(3) of §35.150, is taken from the section 504 regulations for federally conducted programs. Like paragraph (a)(3), it limits the obligation of the public entity to ensure effective communication in accordance with *Davis* and the circuit court opinions interpreting it. It also includes specific requirements for determining the existence of undue financial and administrative burdens. The preamble discussion of §35.150(a) regarding that determination is applicable to this section and further explains the public entity's obligation to comply with §§35.160–35.164. Because of the essential nature of the services provided by telephone emergency systems, the Department assumes that §35.164 will rarely be applied to §35.162.

Subpart F—Compliance Procedures

Subpart F sets out the procedures for administrative enforcement of this part. Section 203 of the Act provides that the remedies, procedures, and rights set forth in section 505 of the Rehabilitation Act of 1973 (29 U.S.C. 794a) for enforcement of section 504 of the Rehabilitation Act, which prohibits discrimination on the basis of handicap in programs and activities that receive Federal financial assistance, shall be the remedies, procedures, and rights for enforcement of title II. Section 505, in turn, incorporates by reference the remedies, procedures, and rights set forth in title VI of the Civil Rights Act of 1964 (42 U.S.C. 2000d to 2000d–4a). Title VI, which prohibits discrimination on the basis of race, color, or national origin in federally assisted programs, is enforced by the Federal agencies that provide the Federal financial assistance to the covered programs and activities in question. If voluntary compliance cannot be achieved, Federal agencies enforce title VI either by the termination of Federal funds to a program that is found to discriminate, following an administrative hearing, or by a referral to this Department for judicial enforcement.

Title II of the ADA extended the requirements of section 504 to all services, programs, and activities of State and local governments, not only those that receive Federal financial assistance. The House Committee on Education and Labor explained the enforcement provisions as follows:

It is the Committee's intent that administrative enforcement of section 202 of the legislation should closely parallel the Federal government's experience with section 504 of the Rehabilitation Act of 1973. The Attorney General should use section 504 enforcement procedures and the Department's coordination role under Executive Order 12250 as models for regulation in this area.

The Committee envisions that the Department of Justice will identify appropriate Federal agencies to oversee compliance activities for State and local governments. As with section 504, these Federal agencies, including the Department of Justice, will receive, investigate, and where possible, resolve complaints of discrimination. If a Federal agency is unable to resolve a complaint by voluntary means, * * * the major enforcement sanction for the Federal government will be referral of cases by these Federal agencies to the Department of Justice.

The Department of Justice may then proceed to file suits in Federal district court. As with section 504, there is also a private right of action for persons with disabilities, which includes the full panoply of remedies. Again, consistent with section 504, it is not the Committee's intent that persons with disabilities need to exhaust Federal administrative remedies before exercising their private right of action.

Education & Labor report at 98. See also S. Rep. No. 116, 101st Cong., 1st Sess., at 57–58 (1989).

Subpart F effectuates the congressional intent by deferring to section 504 procedures where those procedures are applicable, that is, where a Federal agency has jurisdiction under section 504 by virtue of its provision of Federal financial assistance to the program or activity in which the discrimination is alleged to have occurred. Deferral to the 504 procedures also makes the sanction of fund termination available where necessary to achieve compliance. Because the Civil Rights Restoration Act (Pub. L. 100–259) extended the application of section 504 to all of the operations of the public entity receiving the Federal financial assistance, many activities of State and local governments are already covered by section 504. The procedures in subpart F apply to complaints concerning services, programs, and activities of public entities that are covered by the ADA.

Subpart G designates the Federal agencies responsible for enforcing the ADA with respect to specific components of State and local government. It does not, however, displace existing jurisdiction under section 504 of the various funding agencies. Individuals may still file discrimination complaints against recipients of Federal financial assistance with the agencies that provide that assistance, and the funding agencies will continue to process those complaints under

their existing procedures for enforcing section 504. The substantive standards adopted in this part for title II of the ADA are generally the same as those required under section 504 for federally assisted programs, and public entities covered by the ADA are also covered by the requirements of section 504 to the extent that they receive Federal financial assistance. To the extent that title II provides greater protection to the rights of individuals with disabilities, however, the funding agencies will also apply the substantive requirements established under title II and this part in processing complaints covered by both this part and section 504, except that fund termination procedures may be used only for violations of section 504.

Subpart F establishes the procedures to be followed by the agencies designated in subpart G for processing complaints against State and local government entities when the designated agency does not have jurisdiction under section 504.

Section 35.170 Complaints

Section 35.170 provides that any individual who believes that he or she or a specific class of individuals has been subjected to discrimination on the basis of disability by a public entity may, by himself or herself or by an authorized representative, file a complaint under this part within 180 days of the date of the alleged discrimination, unless the time for filing is extended by the agency for good cause. Although §35.107 requires public entities that employ 50 or more persons to establish grievance procedures for resolution of complaints, exhaustion of those procedures is not a prerequisite to filing a complaint under this section. If a complainant chooses to follow the public entity's grievance procedures, however, any resulting delay may be considered good cause for extending the time allowed for filing a complaint under this part.

Filing the complaint with any Federal agency will satisfy the requirement for timely filing. As explained below, a complaint filed with an agency that has jurisdiction under section 504 will be processed under the agency's procedures for enforcing section 504.

Some commenters objected to the complexity of allowing complaints to be filed with different agencies. The multiplicity of enforcement jurisdiction is the result of following the statutorily mandated enforcement scheme. The Department has, however, attempted to simplify procedures for complainants by making the Federal agency that receives the complaint responsible for referring it to an appropriate agency.

The Department has also added a new paragraph (c) to this section providing that a complaint may be filed with any agency designated under subpart G of this part, or with any agency that provides funding to the public entity that is the subject of the complaint, or with the Department of Justice. Under §35.171(a)(2), the Department of Justice will refer complaints for which it does not have jurisdiction under section 504 to an agency that does have jurisdiction under section 504, or to the agency designated under subpart G as responsible for complaints filed against the public entity that is the subject of the complaint or in the case of an employment complaint that is also subject to title I of the Act, to the Equal Employment Opportunity Commission. Complaints filed with the Department of Justice may be sent to the Coordination and Review Section, P.O. Box 66118, Civil Rights Division, U.S. Department of Justice, Washington, DC 20035–6118.

Section 35.171 Acceptance of Complaints

Section 35.171 establishes procedures for determining jurisdiction and responsibility for processing complaints against public entities. The final rule provides complainants an opportunity to file with the Federal funding agency of their choice. If that agency does not have jurisdiction under section 504, however, and is not the agency designated under subpart G as responsible for that public entity, the agency must refer the complaint to the Department of Justice, which will be responsible for referring it either to an agency that does have jurisdiction under section 504 or to the appropriate designated agency, or in the case of an employment complaint that is also subject to title I of the Act, to the Equal Employment Opportunity Commission.

Whenever an agency receives a complaint over which it has jurisdiction under section 504, it will process the complaint under its section 504 procedures. When the agency designated under subpart G receives a complaint for which it does not have jurisdiction under section 504, it will treat the complaint as an ADA complaint under the procedures established in this subpart.

Section 35.171 also describes agency responsibilities for the processing of employment complaints. As described in connection with §35.140, additional procedures regarding the coordination of employment complaints will be established in a coordination regulation issued by DOJ and EEOC. Agencies with jurisdiction under section 504 for complaints alleging employment discrimination also covered by title I will follow the procedures established by the coordination regulation for those complaints. Complaints covered by title I but not section 504 will be referred to the EEOC, and complaints covered by this part but not title I will be processed under the procedures in this part.

Section 35.172 Resolution of Complaints

Section 35.172 requires the designated agency to either resolve the complaint or issue to the complainant and the public entity a Letter of Findings containing findings of fact and conclusions of law and a description of a remedy for each violation found.

The Act requires the Department of Justice to establish administrative procedures for resolution of complaints, but does not require complainants to exhaust these administrative remedies. The Committee Reports make clear that Congress intended to provide a private right of action with the full panoply of remedies for individual victims of discrimination. Because the Act does not require exhaustion of administrative remedies, the complainant may elect to proceed with a private suit at any time.

Section 35.173 Voluntary Compliance Agreements

Section 35.173 requires the agency to attempt to resolve all complaints in which it finds noncompliance through voluntary compliance agreements enforceable by the Attorney General.

Section 35.174 Referral

Section 35.174 provides for referral of the matter to the Department of Justice if the agency is unable to obtain voluntary compliance.

Section 35.175 Attorney's Fees

Section 35.175 states that courts are authorized to award attorneys fees, including litigation expenses and costs, as provided in section 505 of the Act. Litigation expenses include items such as expert witness fees, travel expenses, etc. The Judiciary Committee Report specifies that such items are included under the rubric of ''attorneys fees'' and not ''costs'' so that such expenses will be assessed against a plaintiff only under the standard set forth in *Christiansburg Garment Co.* v. *Equal Employment Opportunity Commission,* 434 U.S. 412 (1978). (Judiciary report at 73.)

Section 35.176 Alternative Means of Dispute Resolution

Section 35.176 restates section 513 of the Act, which encourages use of alternative means of dispute resolution.

Section 35.177 Effect of Unavailability of Technical Assistance

Section 35.177 explains that, as provided in section 506(e) of the Act, a public entity is not excused from compliance with the requirements of this part because of any failure to receive technical assistance.

Section 35.178 State Immunity

Section 35.178 restates the provision of section 502 of the Act that a State is not immune under the eleventh amendment to the Constitution of the United States from an action in Federal or State court for violations of the Act, and that the same remedies are available for any such violations as are available in an action against an entity other than a State.

Subpart G—Designated Agencies

Section 35.190 Designated Agencies

Subpart G designates the Federal agencies responsible for investigating complaints under this part. At least 26 agencies currently administer programs of Federal financial assistance that are subject to the nondiscrimination requirements of section 504 as well as other civil rights statutes. A majority of these agencies administer modest programs of Federal financial assistance and/or devote minimal resources exclusively to ''external'' civil rights enforcement activities. Under Executive Order 12250, the Department of Justice has encouraged the use of delegation agreements under which certain civil rights compliance responsibilities for a class of recipients funded by more than one agency are delegated by an agency or agencies to a ''lead'' agency. For example, many agencies that fund institutions of higher education have signed agreements that designate the Department of Education as the ''lead'' agency for this class of recipients.

The use of delegation agreements reduces overlap and duplication of effort, and thereby strengthens overall civil rights enforcement. However, the use of these agreements to date generally has been limited to education and health care recipients. These classes of recipients are funded by numerous agencies and the logical connection to a lead agency is clear (e.g., the Department of Education for colleges and universities, and the Department of Health and Human Services for hospitals).

The ADA's expanded coverage of State and local government operations further complicates the process of establishing Federal agency jurisdiction for the purpose of investigating complaints of discrimination on the basis of disability. Because all operations of public entities now are covered irrespective of the presence or absence of Federal financial assistance, many additional State and local government functions and organizations now are subject to Federal jurisdiction. In some cases, there is no historical or single clear-cut subject matter relationship with a Federal agency as was the case in the education example described above. Further, the 33,000 governmental jurisdictions subject to the ADA differ greatly in their organization,

making a detailed and workable division of Federal agency jurisdiction by individual State, county, or municipal entity unrealistic.

This regulation applies the delegation concept to the investigation of complaints of discrimination on the basis of disability by public entities under the ADA. It designates eight agencies, rather than all agencies currently administering programs of Federal financial assistance, as responsible for investigating complaints under this part. These ''designated agencies'' generally have the largest civil rights compliance staffs, the most experience in complaint investigations and disability issues, and broad yet clear subject area responsibilities. This division of responsibilities is made functionally rather than by public entity type or name designation. For example, all entities (regardless of their title) that exercise responsibilities, regulate, or administer services or programs relating to lands and natural resources fall within the jurisdiction of the Department of Interior.

Complaints under this part will be investigated by the designated agency most closely related to the functions exercised by the governmental component against which the complaint is lodged. For example, a complaint against a State medical board, where such a board is a recognizable entity, will be investigated by the Department of Health and Human Services (the designated agency for regulatory activities relating to the provision of health care), even if the board is part of a general umbrella department of planning and regulation (for which the Department of Justice is the designated agency). If two or more agencies have apparent responsibility over a complaint, §35.190(c) provides that the Assistant Attorney General shall determine which one of the agencies shall be the designated agency for purposes of that complaint.

Thirteen commenters, including four proposed designated agencies, addressed the Department of Justice's identification in the proposed regulation of nine ''designated agencies'' to investigate complaints under this part. Most comments addressed the proposed specific delegations to the various individual agencies. The Department of Justice agrees with several commenters who pointed out that responsibility for ''historic and cultural preservation'' functions appropriately belongs with the Department of Interior rather than the Department of Education. The Department of Justice also agrees with the Department of Education that ''museums'' more appropriately should be delegated to the Department of Interior, and that ''preschool and daycare programs'' more appropriately should be assigned to the Department of Health and Human Services, rather than to the Department of Education. The final rule reflects these decisions.

The Department of Commerce opposed its listing as the designated agency for ''commerce and industry, including general economic development, banking and finance, consumer protection, insurance, and small business''. The Department of Commerce cited its lack of a substantial existing section 504 enforcement program and experience with many of the specific functions to be delegated. The Department of Justice accedes to the Department of Commerce's position, and has assigned itself as the designated agency for these functions.

In response to a comment from the Department of Health and Human Services, the regulation's category of ''medical and nursing schools'' has been clarified to read ''schools of medicine, dentistry, nursing, and other health-related fields''. Also in response to a comment from the Department of Health and Human Services, ''correctional institutions'' have been specifically added to the public safety and administration of justice functions assigned to the Department of Justice.

The regulation also assigns the Department of Justice as the designated agency responsible for all State and local government functions not assigned to other designated agencies. The Department of Justice, under an agreement with the Department of the Treasury, continues to receive and coordinate the investigation of complaints filed under the Revenue Sharing Act. This entitlement program, which was terminated in 1986, provided civil rights compliance jurisdiction for a wide variety of complaints regarding the use of Federal funds to support various general activities of local governments. In the absence of any similar program of Federal financial assistance administered by another Federal agency, placement of designated agency responsibilities for miscellaneous and otherwise undesignated functions with the Department of Justice is an appropriate continuation of current practice.

The Department of Education objected to the proposed rule's inclusion of the functional area of ''arts and humanities'' within its responsibilities, and the Department of Housing and Urban Development objected to its proposed designation as responsible for activities relating to rent control, the real estate industry, and housing code enforcement. The Department has deleted these areas from the lists assigned to the Departments of Education and Housing and Urban Development, respectively, and has added a new paragraph (c) to §35.190, which provides that the Department of Justice may assign responsibility for components of State or local governments that exercise responsibilities, regulate, or administer services, programs, or activities relating to functions not assigned to specific designated agencies by paragraph (b) of this section to other appropriate agencies. The Department believes

that this approach will provide more flexibility in determining the appropriate agency for investigation of complaints involving those components of State and local governments not specifically addressed by the listings in paragraph (b). As provided in §§35.170 and 35.171, complaints filed with the Department of Justice will be referred to the appropriate agency.

Several commenters proposed a stronger role for the Department of Justice, especially with respect to the receipt and assignment of complaints, and the overall monitoring of the effectiveness of the enforcement activities of Federal agencies. As discussed above, §§35.170 and 35.171 have been revised to provide for referral of complaints by the Department of Justice to appropriate enforcement agencies. Also, language has been added to §35.190(a) of the final regulation stating that the Assistant Attorney General shall provide policy guidance and interpretations to designated agencies to ensure the consistent and effective implementation of this part.

PART 36—NONDISCRIMINATION ON THE BASIS OF DISABILITY BY PUBLIC ACCOMMODATIONS AND IN COMMERCIAL FACILITIES

Subpart A—General

Sec.
36.101 Purpose.
36.102 Application.
36.103 Relationship to other laws.
36.104 Definitions.
36.105–36.199 [Reserved]

Subpart B—General Requirements

36.201 General.
36.202 Activities.
36.203 Integrated settings.
36.204 Administrative methods.
36.205 Association.
36.206 Retaliation or coercion.
36.207 Places of public accommodations located in private residences.
36.208 Direct threat.
36.209 Illegal use of drugs.
36.210 Smoking.
36.211 Maintenance of accessible features.
36.212 Insurance.
36.213 Relationship of subpart B to subparts C and D of this part.
36.214–36.299 [Reserved]

Subpart C—Specific Requirements

36.301 Eligibility criteria.
36.302 Modifications in policies, practices, or procedures.
36.303 Auxiliary aids and services.
36.304 Removal of barriers.
36.305 Alternatives to barrier removal.
36.306 Personal devices and services.
36.307 Accessible or special goods.
36.308 Seating in assembly areas.
36.309 Examinations and courses.
36.310 Transportation provided by public accommodations.
36.311–36.399 [Reserved]

Subpart D—New Construction and Alterations

36.401 New construction.
36.402 Alterations.
36.403 Alterations: Path of travel.
36.404 Alterations: Elevator exemption.
36.405 Alterations: Historic preservation.
36.406 Standards for new construction and alterations.
36.407 Temporary suspension of certain detectable warning requirements.
36.408–36.499 [Reserved]

Subpart E—Enforcement

36.501 Private suits.
36.502 Investigations and compliance reviews.
36.503 Suit by the Attorney General.
36.504 Relief.
36.505 Attorneys fees.
36.506 Alternative means of dispute resolution.
36.507 Effect of unavailability of technical assistance.
36.508 Effective date.
36.509–36.599 [Reserved]

Subpart F—Certification of State Laws or Local Building Codes

36.601 Definitions.
36.602 General rule.
36.603 Filing a request for certification.
36.604 Preliminary determination.
36.605 Procedure following preliminary determination of equivalency.
36.606 Procedure following preliminary denial of certification.
36.607 Effect of certification.
36.608 Guidance concerning model codes.
APPENDIX A TO PART 36—STANDARDS FOR ACCESSIBLE DESIGN
APPENDIX B TO PART 36—PREAMBLE TO REGULATION ON NONDISCRIMINATION ON THE BASIS OF DISABILITY BY PUBLIC ACCOMMODATIONS AND IN COMMERCIAL FACILITIES (PUBLISHED JULY 26, 1991)

AUTHORITY: 5 U.S.C. 301; 28 U.S.C. 509, 510; 42 U.S.C. 12188(b); Pub. L. 101–410, 104 Stat. 890, as amended by Pub. L. 104–134, 110 Stat. 1321.

SOURCE: Order No. 1513–91, 56 FR 35592, July 26, 1991, unless otherwise noted.

Subpart A—General

§ 36.101 Purpose.

The purpose of this part is to implement title III of the Americans with Disabilities Act of 1990 (42 U.S.C. 12181), which prohibits discrimination on the basis of disability by public accommodations and requires places of public accommodation and commercial facilities to be designed, constructed, and altered in compliance with the accessibility standards established by this part.

§ 36.102 Application.

(a) *General*. This part applies to any—

(1) Public accommodation;

(2) Commercial facility; or

(3) Private entity that offers examinations or courses related to applications, licensing, certification, or credentialing for secondary or postsecondary education, professional, or trade purposes.

(b) *Public accommodations*. (1) The requirements of this part applicable to public accommodations are set forth in subparts B, C, and D of this part.

(2) The requirements of subparts B and C of this part obligate a public accommodation only with respect to the operations of a place of public accommodation.

(3) The requirements of subpart D of this part obligate a public accommodation only with respect to—

(i) A facility used as, or designed or constructed for use as, a place of public accommodation; or

(ii) A facility used as, or designed and constructed for use as, a commercial facility.

(c) *Commercial facilities*. The requirements of this part applicable to commercial facilities are set forth in subpart D of this part.

(d) *Examinations and courses*. The requirements of this part applicable to private entities that offer examinations or courses as specified in paragraph (a) of this section are set forth in § 36.309.

(e) *Exemptions and exclusions*. This part does not apply to any private club (except to the extent that the facilities of the private club are made available to customers or patrons of a place of public accommodation), or to any religious entity or public entity.

§ 36.103 Relationship to other laws.

(a) *Rule of interpretation*. Except as otherwise provided in this part, this part shall not be construed to apply a lesser standard than the standards applied under title V of the Rehabilitation Act of 1973 (29 U.S.C. 791) or the regulations issued by Federal agencies pursuant to that title.

(b) *Section 504*. This part does not affect the obligations of a recipient of Federal financial assistance to comply with the requirements of section 504 of the Rehabilitation Act of 1973 (29 U.S.C. 794) and regulations issued by Federal agencies implementing section 504.

(c) *Other laws*. This part does not invalidate or limit the remedies, rights, and procedures of any other Federal laws, or State or local laws (including State common law) that provide greater or equal protection for the rights of individuals with disabilities or individuals associated with them.

§ 36.104 Definitions.

For purposes of this part, the term—

Act means the Americans with Disabilities Act of 1990 (Pub. L. 101–336, 104 Stat. 327, 42 U.S.C. 12101–12213 and 47 U.S.C. 225 and 611).

Commerce means travel, trade, traffic, commerce, transportation, or communication—

(1) Among the several States;

(2) Between any foreign country or any territory or possession and any State; or

(3) Between points in the same State but through another State or foreign country.

Commercial facilities means facilities—

(1) Whose operations will affect commerce;

(2) That are intended for nonresidential use by a private entity; and

(3) That are not—

(i) Facilities that are covered or expressly exempted from coverage under the Fair Housing Act of 1968, as amended (42 U.S.C. 3601–3631);

(ii) Aircraft; or

(iii) Railroad locomotives, railroad freight cars, railroad cabooses, commuter or intercity passenger rail cars

(including coaches, dining cars, sleeping cars, lounge cars, and food service cars), any other railroad cars described in section 242 of the Act or covered under title II of the Act, or railroad rights-of-way. For purposes of this definition, ''rail'' and ''railroad'' have the meaning given the term ''railroad'' in section 202(e) of the Federal Railroad Safety Act of 1970 (45 U.S.C. 431(e)).

Current illegal use of drugs means illegal use of drugs that occurred recently enough to justify a reasonable belief that a person's drug use is current or that continuing use is a real and ongoing problem.

Disability means, with respect to an individual, a physical or mental impairment that substantially limits one or more of the major life activities of such individual; a record of such an impairment; or being regarded as having such an impairment.

(1) The phrase *physical or mental impairment* means—

(i) Any physiological disorder or condition, cosmetic disfigurement, or anatomical loss affecting one or more of the following body systems: neurological; musculoskeletal; special sense organs; respiratory, including speech organs; cardiovascular; reproductive; digestive; genitourinary; hemic and lymphatic; skin; and endocrine;

(ii) Any mental or psychological disorder such as mental retardation, organic brain syndrome, emotional or mental illness, and specific learning disabilities;

(iii) The phrase physical or mental impairment includes, but is not limited to, such contagious and noncontagious diseases and conditions as orthopedic, visual, speech, and hearing impairments, cerebral palsy, epilepsy, muscular dystrophy, multiple sclerosis, cancer, heart disease, diabetes, mental retardation, emotional illness, specific learning disabilities, HIV disease (whether symptomatic or asymptomatic), tuberculosis, drug addiction, and alcoholism;

(iv) The phrase *physical or mental impairment* does not include homosexuality or bisexuality.

(2) The phrase *major life activities* means functions such as caring for one's self, performing manual tasks, walking, seeing, hearing, speaking, breathing, learning, and working.

(3) The phrase *has a record of such an impairment* means has a history of, or has been misclassified as having, a mental or physical impairment that substantially limits one or more major life activities.

(4) The phrase *is regarded as having an impairment* means—

(i) Has a physical or mental impairment that does not substantially limit major life activities but that is treated by a private entity as constituting such a limitation;

(ii) Has a physical or mental impairment that substantially limits major life activities only as a result of the attitudes of others toward such impairment; or

(iii) Has none of the impairments defined in paragraph (1) of this definition but is treated by a private entity as having such an impairment.

(5) The term *disability* does not include—

(i) Transvestism, transsexualism, pedophilia, exhibitionism, voyeurism, gender identity disorders not resulting from physical impairments, or other sexual behavior disorders;

(ii) Compulsive gambling, kleptomania, or pyromania; or

(iii) Psychoactive substance use disorders resulting from current illegal use of drugs.

Drug means a controlled substance, as defined in schedules I through V of section 202 of the Controlled Substances Act (21 U.S.C. 812).

Facility means all or any portion of buildings, structures, sites, complexes, equipment, rolling stock or other conveyances, roads, walks, passageways, parking lots, or other real or personal property, including the site where the building, property, structure, or equipment is located.

Illegal use of drugs means the use of one or more drugs, the possession or distribution of which is unlawful under the Controlled Substances Act (21 U.S.C. 812). The term ''illegal use of drugs'' does not include the use of a drug taken under supervision by a licensed health care professional, or other uses authorized by the Controlled Substances Act or other provisions of Federal law.

Individual with a disability means a person who has a disability. The term ''individual with a disability'' does not include an individual who is currently engaging in the illegal use of drugs, when the private entity acts on the basis of such use.

Place of public accommodation means a facility, operated by a private entity, whose operations affect commerce and fall within at least one of the following categories—

(1) An inn, hotel, motel, or other place of lodging, except for an establishment located within a building that contains not more than five rooms for rent or hire and that is actually occupied by the proprietor of the establishment as the residence of the proprietor;

(2) A restaurant, bar, or other establishment serving food or drink;

(3) A motion picture house, theater, concert hall, stadium, or other place of exhibition or entertainment;

(4) An auditorium, convention center, lecture hall, or other place of public gathering;

(5) A bakery, grocery store, clothing store, hardware store, shopping center, or other sales or rental establishment;

(6) A laundromat, dry-cleaner, bank, barber shop, beauty shop, travel service, shoe repair service, funeral parlor, gas station, office of an accountant or lawyer, pharmacy, insurance office, professional office of a health care provider, hospital, or other service establishment;

(7) A terminal, depot, or other station used for specified public transportation;

(8) A museum, library, gallery, or other place of public display or collection;

(9) A park, zoo, amusement park, or other place of recreation;

(10) A nursery, elementary, secondary, undergraduate, or postgraduate private school, or other place of education;

(11) A day care center, senior citizen center, homeless shelter, food bank, adoption agency, or other social service center establishment; and

(12) A gymnasium, health spa, bowling alley, golf course, or other place of exercise or recreation.

Private club means a private club or establishment exempted from coverage under title II of the Civil Rights Act of 1964 (42 U.S.C. 2000a(e)).

Private entity means a person or entity other than a public entity.

Public accommodation means a private entity that owns, leases (or leases to), or operates a place of public accommodation.

Public entity means—

(1) Any State or local government;

(2) Any department, agency, special purpose district, or other instrumentality of a State or States or local government; and

(3) The National Railroad Passenger Corporation, and any commuter authority (as defined in section 103(8) of the Rail Passenger Service Act). (45 U.S.C. 541)

Qualified interpreter means an interpreter who is able to interpret effectively, accurately and impartially both receptively and expressively, using any necessary specialized vocabulary.

Readily achievable means easily accomplishable and able to be carried out without much difficulty or expense. In determining whether an action is readily achievable factors to be considered include—

(1) The nature and cost of the action needed under this part;

(2) The overall financial resources of the site or sites involved in the action; the number of persons employed at the site; the effect on expenses and resources; legitimate safety requirements that are necessary for safe operation, including crime prevention measures; or the impact otherwise of the action upon the operation of the site;

(3) The geographic separateness, and the administrative or fiscal relationship of the site or sites in question to any parent corporation or entity;

(4) If applicable, the overall financial resources of any parent corporation or entity; the overall size of the parent corporation or entity with respect to the number of its employees; the number, type, and location of its facilities; and

(5) If applicable, the type of operation or operations of any parent corporation or entity, including the composition, structure, and functions of the workforce of the parent corporation or entity.

Religious entity means a religious organization, including a place of worship.

Service animal means any guide dog, signal dog, or other animal individually trained to do work or perform tasks for the benefit of an individual with a disability, including, but not limited to, guiding individuals with impaired vision, alerting individuals with impaired hearing to intruders or sounds, providing minimal protection or rescue work, pulling a wheelchair, or fetching dropped items.

Specified public transportation means transportation by bus, rail, or any other conveyance (other than by aircraft) that provides the general public with general or special service (including charter service) on a regular and continuing basis.

State means each of the several States, the District of Columbia, the Commonwealth of Puerto Rico, Guam, American Samoa, the Virgin Islands, the Trust Territory of the Pacific Islands, and the Commonwealth of the Northern Mariana Islands.

Undue burden means significant difficulty or expense. In determining whether an action would result in an undue burden, factors to be considered include—

(1) The nature and cost of the action needed under this part;

(2) The overall financial resources of the site or sites involved in the action; the number of persons employed at the site; the effect on expenses and resources; legitimate safety requirements that are necessary for safe operation, including crime prevention measures; or the impact otherwise of the action upon the operation of the site;

(3) The geographic separateness, and the administrative or fiscal relationship of the site or sites in question to any parent corporation or entity;

(4) If applicable, the overall financial resources of any parent corporation or entity; the overall size of the parent corporation or entity with respect to the number of its employees; the number, type, and location of its facilities; and

(5) If applicable, the type of operation or operations of any parent corporation or entity, including the composition, structure, and functions of the workforce of the parent corporation or entity.

§§ 36.105–36.199 [Reserved]

Subpart B—General Requirements

§ 36.201 General.

(a) *Prohibition of discrimination.* No individual shall be discriminated against on the basis of disability in the full and equal enjoyment of the goods, services, facilities, privileges, advantages, or accommodations of any place of public accommodation by any private entity who owns, leases (or leases to), or operates a place of public accommodation.

(b) *Landlord and tenant responsibilities.* Both the landlord who owns the building that houses a place of public accommodation and the tenant who owns or operates the place of public accommodation are public accommodations subject to the requirements of this part. As between the parties, allocation of responsibility for complying with the obligations of this part may be determined by lease or other contract.

§ 36.202 Activities.

(a) *Denial of participation.* A public accommodation shall not subject an individual or class of individuals on the basis of a disability or disabilities of such individual or class, directly, or through contractual, licensing, or other arrangements, to a denial of the opportunity of the individual or class to participate in or benefit from the goods, services, facilities, privileges, advantages, or accommodations of a place of public accommodation.

(b) *Participation in unequal benefit.* A public accommodation shall not afford an individual or class of individuals, on the basis of a disability or disabilities of such individual or class, directly, or through contractual, licensing, or other arrangements, with the opportunity to participate in or benefit from a good, service, facility, privilege, advantage, or accommodation that is not equal to that afforded to other individuals.

(c) *Separate benefit.* A public accommodation shall not provide an individual or class of individuals, on the

basis of a disability or disabilities of such individual or class, directly, or through contractual, licensing, or other arrangements with a good, service, facility, privilege, advantage, or accommodation that is different or separate from that provided to other individuals, unless such action is necessary to provide the individual or class of individuals with a good, service, facility, privilege, advantage, or accommodation, or other opportunity that is as effective as that provided to others.

(d) *Individual or class of individuals.* For purposes of paragraphs (a) through (c) of this section, the term ''individual or class of individuals'' refers to the clients or customers of the public accommodation that enters into the contractual, licensing, or other arrangement.

§ 36.203 Integrated settings.

(a) *General.* A public accommodation shall afford goods, services, facilities, privileges, advantages, and accommodations to an individual with a disability in the most integrated setting appropriate to the needs of the individual.

(b) *Opportunity to participate.* Notwithstanding the existence of separate or different programs or activities provided in accordance with this subpart, a public accommodation shall not deny an individual with a disability an opportunity to participate in such programs or activities that are not separate or different.

(c) *Accommodations and services.* (1) Nothing in this part shall be construed to require an individual with a disability to accept an accommodation, aid, service, opportunity, or benefit available under this part that such individual chooses not to accept.

(2) Nothing in the Act or this part authorizes the representative or guardian of an individual with a disability to decline food, water, medical treatment, or medical services for that individual.

§ 36.204 Administrative methods.

A public accommodation shall not, directly or through contractual or other arrangements, utilize standards or criteria or methods of administration that have the effect of discriminating on the basis of disability, or that perpetuate the discrimination of others who are subject to common administrative control.

§ 36.205 Association.

A public accommodation shall not exclude or otherwise deny equal goods, services, facilities, privileges, advantages, accommodations, or other opportunities to an individual or entity because of the known disability of an individual with whom the individual or entity is known to have a relationship or association.

§ 36.206 Retaliation or coercion.

(a) No private or public entity shall discriminate against any individual because that individual has opposed any act or practice made unlawful by this part, or because that individual made a charge, testified, assisted, or participated in any manner in an investigation, proceeding, or hearing under the Act or this part.

(b) No private or public entity shall coerce, intimidate, threaten, or interfere with any individual in the exercise or enjoyment of, or on account of his or her having exercised or enjoyed, or on account of his or her having aided or encouraged any other individual in the exercise or enjoyment of, any right granted or protected by the Act or this part.

(c) Illustrations of conduct prohibited by this section include, but are not limited to:

(1) Coercing an individual to deny or limit the benefits, services, or advantages to which he or she is entitled under the Act or this part;

(2) Threatening, intimidating, or interfering with an individual with a disability who is seeking to obtain or use the goods, services, facilities, privileges, advantages, or accommodations of a public accommodation;

(3) Intimidating or threatening any person because that person is assisting or encouraging an individual or group entitled to claim the rights granted or protected by the Act or this part to exercise those rights; or

(4) Retaliating against any person because that person has participated in any investigation or action to enforce the Act or this part.

§ 36.207 Places of public accommodation located in private residences.

(a) When a place of public accommodation is located in a private residence, the portion of the residence used exclusively as a residence is not covered by this part, but that portion used exclusively in the operation of the place of public accommodation or that portion used both for the place of public accommodation and for residential purposes is covered by this part.

(b) The portion of the residence covered under paragraph (a) of this section extends to those elements used to enter the place of public accommodation, including the homeowner's front sidewalk, if any, the door or entryway, and hallways; and those portions of the residence, interior or exterior, available to or used by customers or clients, including restrooms.

§ 36.208 Direct threat.

(a) This part does not require a public accommodation to permit an individual to participate in or benefit from the goods, services, facilities, privileges, advantages and accommodations of that public accommodation when that individual poses a direct threat to the health or safety of others.

(b) *Direct threat* means a significant risk to the health or safety of others that cannot be eliminated by a modification of policies, practices, or procedures, or by the provision of auxiliary aids or services.

(c) In determining whether an individual poses a direct threat to the health or safety of others, a public accommodation must make an individualized assessment, based on reasonable judgment that relies on current medical knowledge or on the best available objective evidence, to ascertain: the nature, duration, and severity of the risk; the probability that the potential injury will actually occur; and whether reasonable modifications of policies, practices, or procedures will mitigate the risk.

§ 36.209 Illegal use of drugs.

(a) *General.* (1) Except as provided in paragraph (b) of this section, this part does not prohibit discrimination against an individual based on that individual's current illegal use of drugs.

(2) A public accommodation shall not discriminate on the basis of illegal use of drugs against an individual who is not engaging in current illegal use of drugs and who—

(i) Has successfully completed a supervised drug rehabilitation program or has otherwise been rehabilitated successfully;

(ii) Is participating in a supervised rehabilitation program; or

(iii) Is erroneously regarded as engaging in such use.

(b) *Health and drug rehabilitation services.* (1) A public accommodation shall not deny health services, or services provided in connection with drug rehabilitation, to an individual on the basis of that individual's current illegal use of drugs, if the individual is otherwise entitled to such services.

(2) A drug rehabilitation or treatment program may deny participation to individuals who engage in illegal use of drugs while they are in the program.

(c) *Drug testing.* (1) This part does not prohibit a public accommodation from adopting or administering reasonable policies or procedures, including but not limited to drug testing, designed to ensure that an individual who formerly engaged in the illegal use of drugs is not now engaging in current illegal use of drugs.

(2) Nothing in this paragraph (c) shall be construed to encourage, prohibit, restrict, or authorize the conducting of testing for the illegal use of drugs.

§ 36.210 Smoking.

This part does not preclude the prohibition of, or the imposition of restrictions on, smoking in places of public accommodation.

§ 36.211 Maintenance of accessible features.

(a) A public accommodation shall maintain in operable working condition those features of facilities and equipment that are required to be readily accessible to and usable by persons with disabilities by the Act or this part.

(b) This section does not prohibit isolated or temporary interruptions in service or access due to maintenance or repairs.

§ 36.212 Insurance.

(a) This part shall not be construed to prohibit or restrict—

(1) An insurer, hospital or medical service company, health maintenance organization, or any agent, or entity that administers benefit plans, or similar organizations from underwriting risks, classifying risks, or administering such risks that are based on or not inconsistent with State law; or

(2) A person or organization covered by this part from establishing, sponsoring, observing or administering the terms of a bona fide benefit plan that are based on underwriting risks, classifying risks, or administering such risks that are based on or not inconsistent with State law; or

(3) A person or organization covered by this part from establishing, sponsoring, observing or administering the terms of a bona fide benefit plan that is not subject to State laws that regulate insurance.

(b) Paragraphs (a) (1), (2), and (3) of this section shall not be used as a subterfuge to evade the purposes of the Act or this part.

(c) A public accommodation shall not refuse to serve an individual with a disability because its insurance company conditions coverage or rates on the absence of individuals with disabilities.

§ 36.213 Relationship of subpart B to subparts C and D of this part.

Subpart B of this part sets forth the general principles of nondiscrimination applicable to all entities subject to this part. Subparts C and D of this part provide guidance on the application of the statute to specific situations. The specific provisions, including the limitations on those provisions, control over the general provisions in circumstances where both specific and general provisions apply.

§§ 36.214–36.299 [Reserved]

Subpart C—Specific Requirements

§ 36.301 Eligibility criteria.

(a) *General.* A public accommodation shall not impose or apply eligibility criteria that screen out or tend to screen out an individual with a disability or any class of individuals with disabilities from fully and equally enjoying any goods, services, facilities, privileges, advantages, or accommodations, unless such criteria can be shown to be necessary for the provision of the goods, services, facilities, privileges, advantages, or accommodations being offered.

(b) *Safety.* A public accommodation may impose legitimate safety requirements that are necessary for safe operation. Safety requirements must be based on actual risks and not on mere speculation, stereotypes, or generalizations about individuals with disabilities.

(c) *Charges.* A public accommodation may not impose a surcharge on a particular individual with a disability or any group of individuals with disabilities to cover the costs of measures, such as the provision of auxiliary aids, barrier removal, alternatives to barrier removal, and reasonable modifications in policies, practices, or procedures, that are required to provide that individual or group with the nondiscriminatory treatment required by the Act or this part.

§ 36.302 Modifications in policies, practices, or procedures.

(a) *General.* A public accommodation shall make reasonable modifications in policies, practices, or procedures, when the modifications are necessary to afford goods, services, facilities, privileges, advantages, or accommodations to individuals with disabilities, unless the public accommodation can demonstrate that making the modifications would fundamentally alter the nature of the goods, services, facilities, privileges, advantages, or accommodations.

(b) *Specialties*—(1) *General.* A public accommodation may refer an individual with a disability to another public accommodation, if that individual is seeking, or requires, treatment or services outside of the referring public accommodation's area of specialization, and if, in the normal course of its operations, the referring public accommodation would make a similar referral for an individual without a disability who seeks or requires the same treatment or services.

(2) *Illustration—medical specialties.* A health care provider may refer an individual with a disability to another provider, if that individual is seeking, or requires, treatment or services outside of the referring provider's area of specialization, and if the referring provider would make a similar referral for an individual without a disability who seeks or requires the same treatment or services. A physician who specializes in treating only a particular condition cannot refuse to treat an individual with a disability for that condition, but is not required to treat the individual for a different condition.

(c) *Service animals*—(1) *General.* Generally, a public accommodation shall modify policies, practices, or procedures to permit the use of a service animal by an individual with a disability.

(2) *Care or supervision of service animals.* Nothing in this part requires a public accommodation to supervise or care for a service animal.

(d) *Check-out aisles.* A store with check-out aisles shall ensure that an adequate number of accessible check-out aisles are kept open during store hours, or shall otherwise modify its policies and practices, in order to ensure that an equivalent level of convenient service is provided to individuals with disabilities as is provided to others. If only one check-out aisle is accessible, and it is generally used for express service, one way of providing equivalent service is to allow persons with mobility impairments to make all their purchases at that aisle.

§ 36.303 Auxiliary aids and services.

(a) *General.* A public accommodation shall take those steps that may be necessary to ensure that no individual with a disability is excluded, denied services, segregated or otherwise treated differently than other individuals because of the absence of auxiliary aids and services, unless the public accommodation can demonstrate that taking those steps would fundamentally alter the nature of the goods, services, facilities, privileges, advantages, or accommodations being offered or would result in an undue burden, i.e., significant difficulty or expense.

(b) *Examples.* The term ''auxiliary aids and services'' includes—

(1) Qualified interpreters, notetakers, computer-aided transcription services, written materials, telephone handset amplifiers, assistive listening devices, assistive listening systems, telephones compatible with hearing aids, closed caption decoders, open and closed captioning, telecommunications devices for deaf persons (TDD's), videotext displays, or other effective methods of making aurally delivered materials available to individuals with hearing impairments;

(2) Qualified readers, taped texts, audio recordings, Brailled materials, large print materials, or other effective methods of making visually delivered materials available to individuals with visual impairments;

(3) Acquisition or modification of equipment or devices; and

(4) Other similar services and actions.

(c) *Effective communication.* A public accommodation shall furnish appropriate auxiliary aids and services where necessary to ensure effective communication with individuals with disabilities.

(d) *Telecommunication devices for the deaf (TDD's).* (1) A public accommodation that offers a customer, client, patient, or participant the opportunity to make outgoing telephone calls on more than an incidental convenience basis shall make available, upon request, a TDD for the use of an individual who has impaired hearing or a communication disorder.

(2) This part does not require a public accommodation to use a TDD for receiving or making telephone calls incident to its operations.

(e) *Closed caption decoders.* Places of lodging that provide televisions in five or more guest rooms and hospitals that provide televisions for patient use shall provide, upon request, a means for decoding captions for use by an individual with impaired hearing.

(f) *Alternatives.* If provision of a particular auxiliary aid or service by a public accommodation would result in a fundamental alteration in the nature of the goods, services, facilities, privileges, advantages, or accommodations being offered or in an undue burden,

i.e., significant difficulty or expense, the public accommodation shall provide an alternative auxiliary aid or service, if one exists, that would not result in an alteration or such burden but would nevertheless ensure that, to the maximum extent possible, individuals with disabilities receive the goods, services, facilities, privileges, advantages, or accommodations offered by the public accommodation.

§ 36.304 Removal of barriers.

(a) *General.* A public accommodation shall remove architectural barriers in existing facilities, including communication barriers that are structural in nature, where such removal is readily achievable, i.e., easily accomplishable and able to be carried out without much difficulty or expense.

(b) *Examples.* Examples of steps to remove barriers include, but are not limited to, the following actions—

(1) Installing ramps;

(2) Making curb cuts in sidewalks and entrances;

(3) Repositioning shelves;

(4) Rearranging tables, chairs, vending machines, display racks, and other furniture;

(5) Repositioning telephones;

(6) Adding raised markings on elevator control buttons;

(7) Installing flashing alarm lights;

(8) Widening doors;

(9) Installing offset hinges to widen doorways;

(10) Eliminating a turnstile or providing an alternative accessible path;

(11) Installing accessible door hardware;

(12) Installing grab bars in toilet stalls;

(13) Rearranging toilet partitions to increase maneuvering space;

(14) Insulating lavatory pipes under sinks to prevent burns;

(15) Installing a raised toilet seat;

(16) Installing a full-length bathroom mirror;

(17) Repositioning the paper towel dispenser in a bathroom;

(18) Creating designated accessible parking spaces;

(19) Installing an accessible paper cup dispenser at an existing inaccessible water fountain;

(20) Removing high pile, low density carpeting; or

(21) Installing vehicle hand controls.

(c) *Priorities.* A public accommodation is urged to take measures to comply with the barrier removal requirements of this section in accordance with the following order of priorities.

(1) First, a public accommodation should take measures to provide access to a place of public accommodation from public sidewalks, parking, or public transportation. These measures include, for example, installing an entrance ramp, widening entrances, and providing accessible parking spaces.

(2) Second, a public accommodation should take measures to provide access to those areas of a place of public accommodation where goods and services are made available to the public. These measures include, for example, adjusting the layout of display racks, rearranging tables, providing Brailled and raised character signage, widening doors, providing visual alarms, and installing ramps.

(3) Third, a public accommodation should take measures to provide access to restroom facilities. These measures include, for example, removal of obstructing furniture or vending machines, widening of doors, installation of ramps, providing accessible signage, widening of toilet stalls, and installation of grab bars.

(4) Fourth, a public accommodation should take any other measures necessary to provide access to the goods, services, facilities, privileges, advantages, or accommodations of a place of public accommodation.

(d) *Relationship to alterations requirements of subpart D of this part.* (1) Except as provided in paragraph (d)(2) of this section, measures taken to comply with the barrier removal requirements of this section shall comply with the applicable requirements for alterations in § 36.402 and §§ 36.404–36.406 of this part for the element being altered. The path of travel requirements of § 36.403 shall not apply to measures taken solely to comply with the barrier removal requirements of this section.

(2) If, as a result of compliance with the alterations requirements specified in paragraph (d)(1) of this section, the measures required to remove a barrier

would not be readily achievable, a public accommodation may take other readily achievable measures to remove the barrier that do not fully comply with the specified requirements. Such measures include, for example, providing a ramp with a steeper slope or widening a doorway to a narrower width than that mandated by the alterations requirements. No measure shall be taken, however, that poses a significant risk to the health or safety of individuals with disabilities or others.

(e) *Portable ramps.* Portable ramps should be used to comply with this section only when installation of a permanent ramp is not readily achievable. In order to avoid any significant risk to the health or safety of individuals with disabilities or others in using portable ramps, due consideration shall be given to safety features such as nonslip surfaces, railings, anchoring, and strength of materials.

(f) *Selling or serving space.* The rearrangement of temporary or movable structures, such as furniture, equipment, and display racks is not readily achievable to the extent that it results in a significant loss of selling or serving space.

(g) *Limitation on barrier removal obligations.* (1) The requirements for barrier removal under § 36.304 shall not be interpreted to exceed the standards for alterations in subpart D of this part.

(2) To the extent that relevant standards for alterations are not provided in subpart D of this part, then the requirements of § 36.304 shall not be interpreted to exceed the standards for new construction in subpart D of this part.

(3) This section does not apply to rolling stock and other conveyances to the extent that § 36.310 applies to rolling stock and other conveyances.

§ 36.305 Alternatives to barrier removal.

(a) *General.* Where a public accommodation can demonstrate that barrier removal is not readily achievable, the public accommodation shall not fail to make its goods, services, facilities, privileges, advantages, or accommodations available through alternative methods, if those methods are readily achievable.

(b) *Examples.* Examples of alternatives to barrier removal include, but are not limited to, the following actions—

(1) Providing curb service or home delivery;

(2) Retrieving merchandise from inaccessible shelves or racks;

(3) Relocating activities to accessible locations;

(c) *Multiscreen cinemas.* If it is not readily achievable to remove barriers to provide access by persons with mobility impairments to all of the theaters of a multiscreen cinema, the cinema shall establish a film rotation schedule that provides reasonable access for individuals who use wheelchairs to all films. Reasonable notice shall be provided to the public as to the location and time of accessible showings.

§ 36.306 Personal devices and services.

This part does not require a public accommodation to provide its customers, clients, or participants with personal devices, such as wheelchairs; individually prescribed devices, such as prescription eyeglasses or hearing aids; or services of a personal nature including assistance in eating, toileting, or dressing.

§ 36.307 Accessible or special goods.

(a) This part does not require a public accommodation to alter its inventory to include accessible or special goods that are designed for, or facilitate use by, individuals with disabilities.

(b) A public accommodation shall order accessible or special goods at the request of an individual with disabilities, if, in the normal course of its operation, it makes special orders on request for unstocked goods, and if the accessible or special goods can be obtained from a supplier with whom the public accommodation customarily does business.

(c) Examples of accessible or special goods include items such as Brailled versions of books, books on audio cassettes, closed-captioned video tapes, special sizes or lines of clothing, and special foods to meet particular dietary needs.

§ 36.308 Seating in assembly areas.

(a) *Existing facilities.* (1) To the extent that it is readily achievable, a public accommodation in assembly areas shall—

(i) Provide a reasonable number of wheelchair seating spaces and seats with removable aisle-side arm rests; and

(ii) Locate the wheelchair seating spaces so that they—

(A) Are dispersed throughout the seating area;

(B) Provide lines of sight and choice of admission prices comparable to those for members of the general public;

(C) Adjoin an accessible route that also serves as a means of egress in case of emergency; and

(D) Permit individuals who use wheelchairs to sit with family members or other companions.

(2) If removal of seats is not readily achievable, a public accommodation shall provide, to the extent that it is readily achievable to do so, a portable chair or other means to permit a family member or other companion to sit with an individual who uses a wheelchair.

(3) The requirements of paragraph (a) of this section shall not be interpreted to exceed the standards for alterations in subpart D of this part.

(b) *New construction and alterations.* The provision and location of wheelchair seating spaces in newly constructed or altered assembly areas shall be governed by the standards for new construction and alterations in subpart D of this part.

§ 36.309 Examinations and courses.

(a) *General.* Any private entity that offers examinations or courses related to applications, licensing, certification, or credentialing for secondary or postsecondary education, professional, or trade purposes shall offer such examinations or courses in a place and manner accessible to persons with disabilities or offer alternative accessible arrangements for such individuals.

(b) *Examinations.* (1) Any private entity offering an examination covered by this section must assure that—

(i) The examination is selected and administered so as to best ensure that, when the examination is administered to an individual with a disability that impairs sensory, manual, or speaking skills, the examination results accurately reflect the individual's aptitude or achievement level or whatever other factor the examination purports to measure, rather than reflecting the individual's impaired sensory, manual, or speaking skills (except where those skills are the factors that the examination purports to measure);

(ii) An examination that is designed for individuals with impaired sensory, manual, or speaking skills is offered at equally convenient locations, as often, and in as timely a manner as are other examinations; and

(iii) The examination is administered in facilities that are accessible to individuals with disabilities or alternative accessible arrangements are made.

(2) Required modifications to an examination may include changes in the length of time permitted for completion of the examination and adaptation of the manner in which the examination is given.

(3) A private entity offering an examination covered by this section shall provide appropriate auxiliary aids for persons with impaired sensory, manual, or speaking skills, unless that private entity can demonstrate that offering a particular auxiliary aid would fundamentally alter the measurement of the skills or knowledge the examination is intended to test or would result in an undue burden. Auxiliary aids and services required by this section may include taped examinations, interpreters or other effective methods of making orally delivered materials available to individuals with hearing impairments, Brailled or large print examinations and answer sheets or qualified readers for individuals with visual impairments or learning disabilities, transcribers for individuals with manual impairments, and other similar services and actions.

(4) Alternative accessible arrangements may include, for example, provision of an examination at an individual's home with a proctor if accessible facilities or equipment are unavailable.

Alternative arrangements must provide comparable conditions to those provided for nondisabled individuals.

(c) *Courses.* (1) Any private entity that offers a course covered by this section must make such modifications to that course as are necessary to ensure that the place and manner in which the course is given are accessible to individuals with disabilities.

(2) Required modifications may include changes in the length of time permitted for the completion of the course, substitution of specific requirements, or adaptation of the manner in which the course is conducted or course materials are distributed.

(3) A private entity that offers a course covered by this section shall provide appropriate auxiliary aids and services for persons with impaired sensory, manual, or speaking skills, unless the private entity can demonstrate that offering a particular auxiliary aid or service would fundamentally alter the course or would result in an undue burden. Auxiliary aids and services required by this section may include taped texts, interpreters or other effective methods of making orally delivered materials available to individuals with hearing impairments, Brailled or large print texts or qualified readers for individuals with visual impairments and learning disabilities, classroom equipment adapted for use by individuals with manual impairments, and other similar services and actions.

(4) Courses must be administered in facilities that are accessible to individuals with disabilities or alternative accessible arrangements must be made.

(5) Alternative accessible arrangements may include, for example, provision of the course through videotape, cassettes, or prepared notes. Alternative arrangements must provide comparable conditions to those provided for nondisabled individuals.

§ 36.310 Transportation provided by public accommodations.

(a) *General.* (1) A public accommodation that provides transportation services, but that is not primarily engaged in the business of transporting people, is subject to the general and specific provisions in subparts B, C, and D of this part for its transportation operations, except as provided in this section.

(2) *Examples.* Transportation services subject to this section include, but are not limited to, shuttle services operated between transportation terminals and places of public accommodation, customer shuttle bus services operated by private companies and shopping centers, student transportation systems, and transportation provided within recreational facilities such as stadiums, zoos, amusement parks, and ski resorts.

(b) *Barrier removal.* A public accommodation subject to this section shall remove transportation barriers in existing vehicles and rail passenger cars used for transporting individuals (not including barriers that can only be removed through the retrofitting of vehicles or rail passenger cars by the installation of a hydraulic or other lift) where such removal is readily achievable.

(c) *Requirements for vehicles and systems.* A public accommodation subject to this section shall comply with the requirements pertaining to vehicles and transportation systems in the regulations issued by the Secretary of Transportation pursuant to section 306 of the Act.

§§ 36.311–36.399 [Reserved]

Subpart D—New Construction and Alterations

§ 36.401 New construction.

(a) *General.* (1) Except as provided in paragraphs (b) and (c) of this section, discrimination for purposes of this part includes a failure to design and construct facilities for first occupancy after January 26, 1993, that are readily accessible to and usable by individuals with disabilities.

(2) For purposes of this section, a facility is designed and constructed for first occupancy after January 26, 1993, only—

(i) If the last application for a building permit or permit extension for the facility is certified to be complete, by a State, County, or local government after January 26, 1992 (or, in those jurisdictions where the government does not certify completion of applications,

if the last application for a building permit or permit extension for the facility is received by the State, County, or local government after January 26, 1992); and

(ii) If the first certificate of occupancy for the facility is issued after January 26, 1993.

(b) *Commercial facilities located in private residences.* (1) When a commercial facility is located in a private residence, the portion of the residence used exclusively as a residence is not covered by this subpart, but that portion used exclusively in the operation of the commercial facility or that portion used both for the commercial facility and for residential purposes is covered by the new construction and alterations requirements of this subpart.

(2) The portion of the residence covered under paragraph (b)(1) of this section extends to those elements used to enter the commercial facility, including the homeowner's front sidewalk, if any, the door or entryway, and hallways; and those portions of the residence, interior or exterior, available to or used by employees or visitors of the commercial facility, including restrooms.

(c) *Exception for structural impracticability.* (1) Full compliance with the requirements of this section is not required where an entity can demonstrate that it is structurally impracticable to meet the requirements. Full compliance will be considered structurally impracticable only in those rare circumstances when the unique characteristics of terrain prevent the incorporation of accessibility features.

(2) If full compliance with this section would be structurally impracticable, compliance with this section is required to the extent that it is not structurally impracticable. In that case, any portion of the facility that can be made accessible shall be made accessible to the extent that it is not structurally impracticable.

(3) If providing accessibility in conformance with this section to individuals with certain disabilities (e.g., those who use wheelchairs) would be structurally impracticable, accessibility shall nonetheless be ensured to persons with other types of disabilities (e.g., those who use crutches or who have sight, hearing, or mental impairments) in accordance with this section.

(d) *Elevator exemption.* (1) For purposes of this paragraph (d)—

(i) *Professional office of a health care provider* means a location where a person or entity regulated by a State to provide professional services related to the physical or mental health of an individual makes such services available to the public. The facility housing the ''professional office of a health care provider'' only includes floor levels housing at least one health care provider, or any floor level designed or intended for use by at least one health care provider.

(ii) *Shopping center or shopping mall means*—

(A) A building housing five or more sales or rental establishments; or

(B) A series of buildings on a common site, either under common ownership or common control or developed either as one project or as a series of related projects, housing five or more sales or rental establishments. For purposes of this section, places of public accommodation of the types listed in paragraph (5) of the definition of ''place of public accommodation'' in section § 36.104 are considered sales or rental establishments. The facility housing a ''shopping center or shopping mall'' only includes floor levels housing at least one sales or rental establishment, or any floor level designed or intended for use by at least one sales or rental establishment.

(2) This section does not require the installation of an elevator in a facility that is less than three stories or has less than 3000 square feet per story, except with respect to any facility that houses one or more of the following:

(i) A shopping center or shopping mall, or a professional office of a health care provider.

(ii) A terminal, depot, or other station used for specified public transportation, or an airport passenger terminal. In such a facility, any area housing passenger services, including boarding and debarking, loading and unloading, baggage claim, dining facilities, and other common areas open to the public, must be on an accessible route from an accessible entrance.

(3) The elevator exemption set forth in this paragraph (d) does not obviate or limit, in any way the obligation to comply with the other accessibility requirements established in paragraph (a) of this section. For example, in a facility that houses a shopping center or shopping mall, or a professional office of a health care provider, the floors that are above or below an accessible ground floor and that do not house sales or rental establishments or a professional office of a health care provider, must meet the requirements of this section but for the elevator.

§ 36.402 Alterations.

(a) *General.* (1) Any alteration to a place of public accommodation or a commercial facility, after January 26, 1992, shall be made so as to ensure that, to the maximum extent feasible, the altered portions of the facility are readily accessible to and usable by individuals with disabilities, including individuals who use wheelchairs.

(2) An alteration is deemed to be undertaken after January 26, 1992, if the physical alteration of the property begins after that date.

(b) *Alteration.* For the purposes of this part, an alteration is a change to a place of public accommodation or a commercial facility that affects or could affect the usability of the building or facility or any part thereof.

(1) Alterations include, but are not limited to, remodeling, renovation, rehabilitation, reconstruction, historic restoration, changes or rearrangement in structural parts or elements, and changes or rearrangement in the plan configuration of walls and full-height partitions. Normal maintenance, reroofing, painting or wallpapering, asbestos removal, or changes to mechanical and electrical systems are not alterations unless they affect the usability of the building or facility.

(2) If existing elements, spaces, or common areas are altered, then each such altered element, space, or area shall comply with the applicable provisions of appendix A to this part.

(c) *To the maximum extent feasible.* The phrase ''to the maximum extent feasible,'' as used in this section, applies to the occasional case where the nature of an existing facility makes it virtually impossible to comply fully with applicable accessibility standards through a planned alteration. In these circumstances, the alteration shall provide the maximum physical accessibility feasible. Any altered features of the facility that can be made accessible shall be made accessible. If providing accessibility in conformance with this section to individuals with certain disabilities (e.g., those who use wheelchairs) would not be feasible, the facility shall be made accessible to persons with other types of disabilities (e.g., those who use crutches, those who have impaired vision or hearing, or those who have other impairments).

§ 36.403 Alterations: Path of travel.

(a) *General.* An alteration that affects or could affect the usability of or access to an area of a facility that contains a primary function shall be made so as to ensure that, to the maximum extent feasible, the path of travel to the altered area and the restrooms, telephones, and drinking fountains serving the altered area, are readily accessible to and usable by individuals with disabilities, including individuals who use wheelchairs, unless the cost and scope of such alterations is disproportionate to the cost of the overall alteration.

(b) *Primary function.* A ''primary function'' is a major activity for which the facility is intended. Areas that contain a primary function include, but are not limited to, the customer services lobby of a bank, the dining area of a cafeteria, the meeting rooms in a conference center, as well as offices and other work areas in which the activities of the public accommodation or other private entity using the facility are carried out. Mechanical rooms, boiler rooms, supply storage rooms, employee lounges or locker rooms, janitorial closets, entrances, corridors, and restrooms are not areas containing a primary function.

(c) *Alterations to an area containing a primary function.* (1) Alterations that affect the usability of or access to an area containing a primary function include, but are not limited to—

(i) Remodeling merchandise display areas or employee work areas in a department store;

(ii) Replacing an inaccessible floor surface in the customer service or employee work areas of a bank;

(iii) Redesigning the assembly line area of a factory; or

(iv) Installing a computer center in an accounting firm.

(2) For the purposes of this section, alterations to windows, hardware, controls, electrical outlets, and signage shall not be deemed to be alterations that affect the usability of or access to an area containing a primary function.

(d) *Landlord/tenant:* If a tenant is making alterations as defined in § 36.402 that would trigger the requirements of this section, those alterations by the tenant in areas that only the tenant occupies do not trigger a path of travel obligation upon the landlord with respect to areas of the facility under the landlord's authority, if those areas are not otherwise being altered.

(e) *Path of travel.* (1) A ''path of travel'' includes a continuous, unobstructed way of pedestrian passage by means of which the altered area may be approached, entered, and exited, and which connects the altered area with an exterior approach (including sidewalks, streets, and parking areas), an entrance to the facility, and other parts of the facility.

(2) An accessible path of travel may consist of walks and sidewalks, curb ramps and other interior or exterior pedestrian ramps; clear floor paths through lobbies, corridors, rooms, and other improved areas; parking access aisles; elevators and lifts; or a combination of these elements.

(3) For the purposes of this part, the term ''path of travel'' also includes the restrooms, telephones, and drinking fountains serving the altered area.

(f) *Disproportionality.* (1) Alterations made to provide an accessible path of travel to the altered area will be deemed disproportionate to the overall alteration when the cost exceeds 20% of the cost of the alteration to the primary function area.

(2) Costs that may be counted as expenditures required to provide an accessible path of travel may include:

(i) Costs associated with providing an accessible entrance and an accessible route to the altered area, for example, the cost of widening doorways or installing ramps;

(ii) Costs associated with making restrooms accessible, such as installing grab bars, enlarging toilet stalls, insulating pipes, or installing accessible faucet controls;

(iii) Costs associated with providing accessible telephones, such as relocating the telephone to an accessible height, installing amplification devices, or installing a telecommunications device for deaf persons (TDD);

(iv) Costs associated with relocating an inaccessible drinking fountain.

(g) *Duty to provide accessible features in the event of disproportionality.* (1) When the cost of alterations necessary to make the path of travel to the altered area fully accessible is disproportionate to the cost of the overall alteration, the path of travel shall be made accessible to the extent that it can be made accessible without incurring disproportionate costs.

(2) In choosing which accessible elements to provide, priority should be given to those elements that will provide the greatest access, in the following order:

(i) An accessible entrance;

(ii) An accessible route to the altered area;

(iii) At least one accessible restroom for each sex or a single unisex restroom;

(iv) Accessible telephones;

(v) Accessible drinking fountains; and

(vi) When possible, additional accessible elements such as parking, storage, and alarms.

(h) *Series of smaller alterations.* (1) The obligation to provide an accessible path of travel may not be evaded by performing a series of small alterations to the area served by a single path of travel if those alterations could have been performed as a single undertaking.

(2)(i) If an area containing a primary function has been altered without providing an accessible path of travel to that area, and subsequent alterations of that area, or a different area on the same path of travel, are undertaken within three years of the original alteration, the total cost of alterations to the primary function areas on that

path of travel during the preceding three year period shall be considered in determining whether the cost of making that path of travel accessible is disproportionate.

(ii) Only alterations undertaken after January 26, 1992, shall be considered in determining if the cost of providing an accessible path of travel is disproportionate to the overall cost of the alterations.

§ 36.404 Alterations: Elevator exemption.

(a) This section does not require the installation of an elevator in an altered facility that is less than three stories or has less than 3,000 square feet per story, except with respect to any facility that houses a shopping center, a shopping mall, the professional office of a health care provider, a terminal, depot, or other station used for specified public transportation, or an airport passenger terminal.

(1) For the purposes of this section, *professional office of a health care provider* means a location where a person or entity regulated by a State to provide professional services related to the physical or mental health of an individual makes such services available to the public. The facility that houses a *professional office of a health care provider* only includes floor levels housing by at least one health care provider, or any floor level designed or intended for use by at least one health care provider.

(2) For the purposes of this section, *shopping center or shopping mall* means—

(i) A building housing five or more sales or rental establishments; or

(ii) A series of buildings on a common site, connected by a common pedestrian access route above or below the ground floor, that is either under common ownership or common control or developed either as one project or as a series of related projects, housing five or more sales or rental establishments. For purposes of this section, places of public accommodation of the types listed in paragraph (5) of the definition of *place of public accommodation* in § 36.104 are considered sales or rental establishments. The facility housing a *shopping center or shopping mall* only includes floor levels housing at least one sales or rental establishment, or any floor level designed or intended for use by at least one sales or rental establishment.

(b) The exemption provided in paragraph (a) of this section does not obviate or limit in any way the obligation to comply with the other accessibility requirements established in this subpart. For example, alterations to floors above or below the accessible ground floor must be accessible regardless of whether the altered facility has an elevator.

§ 36.405 Alterations: Historic preservation.

(a) Alterations to buildings or facilities that are eligible for listing in the National Register of Historic Places under the National Historic Preservation Act (16 U.S.C. 470 *et seq.*), or are designated as historic under State or local law, shall comply to the maximum extent feasible with section 4.1.7 of appendix A to this part.

(b) If it is determined under the procedures set out in section 4.1.7 of appendix A that it is not feasible to provide physical access to an historic property that is a place of public accommodation in a manner that will not threaten or destroy the historic significance of the building or facility, alternative methods of access shall be provided pursuant to the requirements of subpart C of this part.

§ 36.406 Standards for new construction and alterations.

(a) New construction and alterations subject to this part shall comply with the standards for accessible design published as appendix A to this part (ADAAG).

(b) The chart in the appendix to this section provides guidance to the user in reading appendix A to this part (ADAAG) together with subparts A through D of this part, when determining requirements for a particular facility.

APPENDIX TO § 36.406

This chart has no effect for purposes of compliance or enforcement. It does not necessarily provide complete or mandatory information.

	Subparts A–D	ADAAG
Application, General.	36.102(b)(3): public accommodations. 36.102(c): commercial facilities. 36.102(e): public entities. 36.103 (other laws) 36.401 ("for first occupancy"). 36.402(a) (alterations).	1, 2, 3, 4.1.1.
Definitions	36.104: commercial facilities, facility, place of public accommodation, private club, public accommodation, public entity, religious entity.	3.5 Definitions, including: addition, alteration, building, element, facility, space, story.
	36.401(d)(1)(ii), 36.404(a)(2): shopping center or shopping mall. 36.401(d)(1)(i), 36.404(a)(1): professional office of a health care provider. 36.402: alteration; usability. 36.402(c): to the maximum extent feasible.	4.1.6(j), technical infeasibility.
New Construction:.	36.401(a) General ..	4.1.2.
General	36.401(b) Commercial facilities in private residences. 36.207 Places of public accommodation in private residences.	4.1.3.
Work Areas	.....	4.1.1(3).
Structural Impracticability.	36.401(c)	4.1.1(5)(a).
Elevator Exemption.	36.401(d)	4.1.3(5).
	36.404	
Other Exceptions.	.....	4.1.1(5), 4.1.3(5) and throughout.
Alterations: General.	36.401(b): commercial facilities in private residences.	
	36.402	4.1.6(1).
Alterations Affecting an Area Containing A Primary Function; Path of Travel; Disproportionality.	36.403	4.1.6(2).
Alterations: Special Technical Provisions.	.....	4.1.6(3).
Additions	36.401–36.405	4.1.5.
Historic Preservation.	36.405	4.1.7.
Technical Provisions.	.....	4.2 through 4.35.
Restaurants and Cafeterias.	.....	5.
Medical Care Facilities.	.....	6.
Business and Mercantile.	.....	7.
Libraries	.....	8.
Transient Lodging (Hotels, Homeless Shelters, Etc.).	.....	9.
Transportation Facilities.	.....	10.

[Order No. 1513–91, 56 FR 35592, July 26, 1991, as amended by Order No. 1836–94, 59 FR 2675, Jan. 18, 1994]

§ 36.407 Temporary suspension of certain detectable warning requirements.

The detectable warning requirements contained in sections 4.7.7, 4.29.5, and 4.29.6 of appendix A to this part are suspended temporarily until July 26, 2001.

[Order No. 2191–98, 63 FR 64837, 64838, Nov. 23, 1998]

§§ 36.408–36.499 [Reserved]

Subpart E—Enforcement

§ 36.501 Private suits.

(a) *General*. Any person who is being subjected to discrimination on the basis of disability in violation of the Act or this part or who has reasonable grounds for believing that such person is about to be subjected to discrimination in violation of section 303 of the Act or subpart D of this part may institute a civil action for preventive relief, including an application for a permanent or temporary injunction, restraining order, or other order. Upon timely application, the court may, in its discretion, permit the Attorney General to intervene in the civil action if the Attorney General or his or her designee certifies that the case is of general public importance. Upon application by the complainant and in such circumstances as the court may deem just, the court may appoint an attorney for such complainant and may authorize the commencement of the civil action without the payment of fees, costs, or security. Nothing in this section shall require a person with a disability to engage in a futile gesture if

the person has actual notice that a person or organization covered by title III of the Act or this part does not intend to comply with its provisions.

(b) *Injunctive relief.* In the case of violations of § 36.304, §§ 36.308, 36.310(b), 36.401, 36.402, 36.403, and 36.405 of this part, injunctive relief shall include an order to alter facilities to make such facilities readily accessible to and usable by individuals with disabilities to the extent required by the Act or this part. Where appropriate, injunctive relief shall also include requiring the provision of an auxiliary aid or service, modification of a policy, or provision of alternative methods, to the extent required by the Act or this part.

§ 36.502 Investigations and compliance reviews.

(a) The Attorney General shall investigate alleged violations of the Act or this part.

(b) Any individual who believes that he or she or a specific class of persons has been subjected to discrimination prohibited by the Act or this part may request the Department to institute an investigation.

(c) Where the Attorney General has reason to believe that there may be a violation of this part, he or she may initiate a compliance review.

§ 36.503 Suit by the Attorney General.

Following a compliance review or investigation under § 36.502, or at any other time in his or her discretion, the Attorney General may commence a civil action in any appropriate United States district court if the Attorney General has reasonable cause to believe that—

(a) Any person or group of persons is engaged in a pattern or practice of discrimination in violation of the Act or this part; or

(b) Any person or group of persons has been discriminated against in violation of the Act or this part and the discrimination raises an issue of general public importance.

§ 36.504 Relief.

(a) *Authority of court.* In a civil action under § 36.503, the court—

(1) May grant any equitable relief that such court considers to be appropriate, including, to the extent required by the Act or this part—

(i) Granting temporary, preliminary, or permanent relief;

(ii) Providing an auxiliary aid or service, modification of policy, practice, or procedure, or alternative method; and

(iii) Making facilities readily accessible to and usable by individuals with disabilities;

(2) May award other relief as the court considers to be appropriate, including monetary damages to persons aggrieved when requested by the Attorney General; and

(3) May, to vindicate the public interest, assess a civil penalty against the entity in an amount

(i) Not exceeding $50,000 for a first violation occurring before September 29, 1999, and not exceeding $55,000 for a first violation occurring on or after September 29, 1999; and

(ii) Not exceeding $100,000 for any subsequent violation occurring before September 29, 1999, and not exceeding $110,000 for any subsequent violation occurring on or after September 29, 1999.

(b) *Single violation.* For purposes of paragraph (a) (3) of this section, in determining whether a first or subsequent violation has occurred, a determination in a single action, by judgment or settlement, that the covered entity has engaged in more than one discriminatory act shall be counted as a single violation.

(c) *Punitive damages.* For purposes of paragraph (a)(2) of this section, the terms ''monetary damages'' and ''such other relief'' do not include punitive damages.

(d) *Judicial consideration.* In a civil action under § 36.503, the court, when considering what amount of civil penalty, if any, is appropriate, shall give consideration to any good faith effort or attempt to comply with this part by the entity. In evaluating good faith, the court shall consider, among other factors it deems relevant, whether the entity could have reasonably anticipated the need for an appropriate type of auxiliary aid needed to accommodate

the unique needs of a particular individual with a disability.

[Order No. 1513–91, 56 FR 35592, July 26, 1991, as amended by Order No. 2249–99, 64 FR 47103, Aug. 30, 1999]

§ 36.505 Attorneys fees.

In any action or administrative proceeding commenced pursuant to the Act or this part, the court or agency, in its discretion, may allow the prevailing party, other than the United States, a reasonable attorney's fee, including litigation expenses, and costs, and the United States shall be liable for the foregoing the same as a private individual.

§ 36.506 Alternative means of dispute resolution.

Where appropriate and to the extent authorized by law, the use of alternative means of dispute resolution, including settlement negotiations, conciliation, facilitation, mediation, fact-finding, minitrials, and arbitration, is encouraged to resolve disputes arising under the Act and this part.

§ 36.507 Effect of unavailability of technical assistance.

A public accommodation or other private entity shall not be excused from compliance with the requirements of this part because of any failure to receive technical assistance, including any failure in the development or dissemination of any technical assistance manual authorized by the Act.

§ 36.508 Effective date.

(a) *General*. Except as otherwise provided in this section and in this part, this part shall become effective on January 26, 1992.

(b) *Civil actions*. Except for any civil action brought for a violation of section 303 of the Act, no civil action shall be brought for any act or omission described in section 302 of the Act that occurs—

(1) Before July 26, 1992, against businesses with 25 or fewer employees and gross receipts of $1,000,000 or less.

(2) Before January 26, 1993, against businesses with 10 or fewer employees and gross receipts of $500,000 or less.

(c) *Transportation services provided by public accommodations*. Newly purchased or leased vehicles required to be accessible by § 36.310 must be readily accessible to and usable by individuals with disabilities, including individuals who use wheelchairs, if the solicitation for the vehicle is made after August 25, 1990.

§§ 36.509–36.599 [Reserved]

Subpart F—Certification of State Laws or Local Building Codes

§ 36.601 Definitions.

Assistant Attorney General means the Assistant Attorney General for Civil Rights or his or her designee.

Certification of equivalency means a final certification that a code meets or exceeds the minimum requirements of title III of the Act for accessibility and usability of facilities covered by that title.

Code means a State law or local building code or similar ordinance, or part thereof, that establishes accessibility requirements.

Model code means a nationally recognized document developed by a private entity for use by State or local jurisdictions in developing codes as defined in this section. A model code is intended for incorporation by reference or adoption in whole or in part, with or without amendment, by State or local jurisdictions.

Preliminary determination of equivalency means a preliminary determination that a code appears to meet or exceed the minimum requirements of title III of the Act for accessibility and usability of facilities covered by that title.

Submitting official means the State or local official who—

(1) Has principal responsibility for administration of a code, or is authorized to submit a code on behalf of a jurisdiction; and

(2) Files a request for certification under this subpart.

§ 36.602 General rule.

On the application of a State or local government, the Assistant Attorney General may certify that a code meets or exceeds the minimum requirements of the Act for the accessibility and

usability of places of public accommodation and commercial facilities under this part by issuing a certification of equivalency. At any enforcement proceeding under title III of the Act, such certification shall be rebuttable evidence that such State law or local ordinance does meet or exceed the minimum requirements of title III.

§ 36.603 Filing a request for certification.

(a) A submitting official may file a request for certification of a code under this subpart.

(b) Before filing a request for certification of a code, the submitting official shall ensure that—

(1) Adequate public notice of intention to file a request for certification, notice of a hearing, and notice of the location at which the request and materials can be inspected is published within the relevant jurisdiction;

(2) Copies of the proposed request and supporting materials are made available for public examination and copying at the office of the State or local agency charged with administration and enforcement of the code; and

(3) The local or State jurisdiction holds a public hearing on the record, in the State or locality, at which the public is invited to comment on the proposed request for certification.

(c) The submitting official shall include the following materials and information in support of the request:

(1) The text of the jurisdiction's code; any standard, regulation, code, or other relevant document incorporated by reference or otherwise referenced in the code; the law creating and empowering the agency; any relevant manuals, guides, or any other interpretive information issued that pertain to the code; and any formal opinions of the State Attorney General or the chief legal officer of the jurisdiction that pertain to the code;

(2) Any model code or statute on which the pertinent code is based, and an explanation of any differences between the model and the pertinent code;

(3) A transcript of the public hearing required by paragraph (b)(3) of this section; and

(4) Any additional information that the submitting official may wish to be considered.

(d) The submitting official shall file the original and one copy of the request and of supporting materials with the Assistant Attorney General. The submitting official shall clearly label the request as a ''request for certification'' of a code. A copy of the request and supporting materials will be available for public examination and copying at the offices of the Assistant Attorney General in Washington, DC. The submitting official shall ensure that copies of the request and supporting materials are available for public examination and copying at the office of the State or local agency charged with administration and enforcement of the code. The submitting official shall ensure that adequate public notice of the request for certification and of the location at which the request and materials can be inspected is published within the relevant jurisdiction.

(e) Upon receipt of a request for certification, the Assistant Attorney General may request further information that he or she considers relevant to the determinations required to be made under this subpart.

(Approved by the Office of Management and Budget under control number 1190–0005)

[56 FR 35592, July 26, 1991, as amended by Order No. 1679–93, 58 FR 17522, Apr. 5, 1993]

§ 36.604 Preliminary determination.

After consultation with the Architectural and Transportation Barriers Compliance Board, the Assistant Attorney General shall make a preliminary determination of equivalency or a preliminary determination to deny certification.

§ 36.605 Procedure following preliminary determination of equivalency.

(a) If the Assistant Attorney General makes a preliminary determination of equivalency under § 36.604, he or she shall inform the submitting official, in writing, of that preliminary determination. The Assistant Attorney General shall also—

(1) Publish a notice in the FEDERAL REGISTER that advises the public of the preliminary determination of equivalency with respect to the particular

code, and invite interested persons and organizations, including individuals with disabilities, during a period of at least 60 days following publication of the notice, to file written comments relevant to whether a final certification of equivalency should be issued;

(2) After considering the information received in response to the notice described in paragraph (a) of this section, and after publishing a separate notice in the FEDERAL REGISTER, hold an informal hearing in Washington, DC at which interested persons, including individuals with disabilities, are provided an opportunity to express their views with respect to the preliminary determination of equivalency; and

(b) The Assistant Attorney General, after consultation with the Architectural and Transportation Barriers Compliance Board, and consideration of the materials and information submitted pursuant to this section and § 36.603, shall issue either a certification of equivalency or a final determination to deny the request for certification. He or she shall publish notice of the certification of equivalency or denial of certification in the FEDERAL REGISTER.

§ 36.606 Procedure following preliminary denial of certification.

(a) If the Assistant Attorney General makes a Preliminary determination to deny certification of a code under § 36.604, he or she shall notify the submitting official of the determination. The notification may include specification of the manner in which the code could be amended in order to qualify for certification.

(b) The Assistant Attorney General shall allow the submitting official not less than 15 days to submit data, views, and arguments in opposition to the preliminary determination to deny certification. If the submitting official does not submit materials, the Assistant Attorney General shall not be required to take any further action. If the submitting official submits materials, the Assistant Attorney General shall evaluate those materials and any other relevant information. After evaluation of any newly submitted materials, the Assistant Attorney General shall make either a final denial of certification or a preliminary determination of equivalency.

§ 36.607 Effect of certification.

(a)(1) A certification shall be considered a certification of equivalency only with respect to those features or elements that are both covered by the certified code and addressed by the standards against which equivalency is measured.

(2) For example, if certain equipment is not covered by the code, the determination of equivalency cannot be used as evidence with respect to the question of whether equipment in a building built according to the code satisfies the Act's requirements with respect to such equipment. By the same token, certification would not be relevant to construction of a facility for children, if the regulations against which equivalency is measured do not address children's facilities.

(b) A certification of equivalency is effective only with respect to the particular edition of the code for which certification is granted. Any amendments or other changes to the code after the date of the certified edition are not considered part of the certification.

(c) A submitting official may reapply for certification of amendments or other changes to a code that has already received certification.

§ 36.608 Guidance concerning model codes.

Upon application by an authorized representative of a private entity responsible for developing a model code, the Assistant Attorney General may review the relevant model code and issue guidance concerning whether and in what respects the model code is consistent with the minimum requirements of the Act for the accessibility and usability of places of public accommodation and commercial facilities under this part.

ADA ACCESSIBILITY GUIDELINES FOR BUILDINGS AND FACILITIES TABLE OF CONTENTS

1. PURPOSE **1**

2. GENERAL **1**

2.1 Provisions for Adults 1
2.2 Equivalent Facilitation 1

3. MISCELLANEOUS INSTRUCTIONS AND DEFINITIONS **1**

3.1 Graphic Conventions 1
3.2 Dimensional Tolerances 2
3.3 Notes 2
3.4 General Terminology 2
3.5 Definitions 2

4. ACCESSIBLE ELEMENTS AND SPACES: SCOPE AND TECHNICAL REQUIREMENTS **5**

4.1 Minimum Requirements 5

4.1.1. Application 5
4.1.2. Accessible Sites and Exterior Facilities: New Construction 5
4.1.3. Accessible Buildings: New Construction 7
4.1.4. (Reserved) 10
4.1.5. Accessible Buildings: Additions 10
4.1.6. Accessible Buildings: Alterations 11
4.1.7. Accessible Buildings: Historic Preservation 13

4.2 Space Allowance and Reach Ranges 14
4.3 Accessible Route 15
4.4 Protruding Objects 21
4.5 Ground and Floor Surfaces 22
4.6 Parking and Passenger Loading Zones 24
4.7 Curb Ramps 26
4.8 Ramps 27
4.9 Stairs 30
4.10 Elevators 30

4.11 Platform Lifts (Wheelchair Lifts) 36
4.12 Windows 36
4.13 Doors 36
4.14 Entrances 40
4.15 Drinking Fountains and Water Coolers 40
4.16 Water Closets 40
4.17 Toilet Stalls 41
4.18 Urinals 44
4.19 Lavatories and Mirrors 44
4.20 Bathtubs 45
4.21 Shower Stalls 45
4.22 Toilet Rooms 45
4.23 Bathrooms, Bathing Facilities, and Shower Rooms 48
4.24 Sinks 49
4.25 Storage 49
4.26 Handrails, Grab Bars, and Tub and Shower Seats 50
4.27 Controls and Operating Mechanisms 51
4.28 Alarms 52
4.29 Detectable Warnings 53
4.30 Signage 53
4.31 Telephones 54
4.32 Fixed or Built-in Seating and Tables 56
4.33 Assembly Areas 56
4.34 Automated Teller Machines 58
4.35 Dressing and Fitting Rooms 58

5. RESTAURANTS AND CAFETERIAS. 59

6. MEDICAL CARE FACILITIES 60

7. BUSINESS AND MERCANTILE 61

8. LIBRARIES 62

9. ACCESSIBLE TRANSIENT LODGING 63

10. TRANSPORTATION FACILITIES 67

APPENDIX A1

1. PURPOSE.

This document sets guidelines for accessibility to places of public accommodation and commercial facilities by individuals with disabilities. These guidelines are to be applied during the design, construction, and alteration of such buildings and facilities to the extent required by regulations issued by Federal agencies, including the Department of Justice, under the Americans with Disabilities Act of 1990.

The technical specifications 4.2 through 4.35, of these guidelines are the same as those of the American National Standard Institute's document A117.1-1980, except as noted in this text by italics. However, sections 4.1.1 through 4.1.7 and sections 5 through 10 are different from ANSI A117.1 in their entirety and are printed in standard type.

The illustrations and text of ANSI A117.1 are reproduced with permission from the American National Standards Institute. Copies of the standard may be purchased from the American National Standards Institute at 1430 Broadway, New York, New York 10018.

2. GENERAL.

2.1 Provisions for Adults. *The specifications in these guidelines are based upon adult dimensions and anthropometrics.*

2.2* Equivalent Facilitation. *Departures from particular technical and scoping requirements of this guideline by the use of other designs and technologies are permitted where the alternative designs and technologies used will provide substantially equivalent or greater access to and usability of the facility.*

3. MISCELLANEOUS INSTRUCTIONS AND DEFINITIONS.

3.1 Graphic Conventions. Graphic conventions are shown in Table 1. Dimensions that are not marked minimum or maximum are absolute, unless otherwise indicated in the text or captions.

Table 1
Graphic Conventions

Convention	Description
36 / 915	Typical dimension line showing U.S. customary units (in inches) above the line and SI units (in millimeters) below
9 / 230	Dimensions for short distances indicated on extended line
9 / 230 36 / 915	Dimension line showing alternate dimensions required
	Direction of approach
max	Maximum
min	Minimum
.....	Boundary of clear floor area
— — — ℄	Centerline

1

3.4 General Terminology

3.2 Dimensional Tolerances. All dimensions are subject to conventional building industry tolerances for field conditions.

3.3 Notes. The text of *these guidelines* does not contain notes or footnotes. Additional information, explanations, and advisory materials are located in the Appendix. Paragraphs marked with an asterisk have related, non-mandatory material in the Appendix. In the Appendix, the corresponding paragraph numbers are preceded by an A.

3.4 General Terminology.

comply with. Meet one or more specifications of *these guidelines*.

if, if ... then. Denotes a specification that applies only when the conditions described are present.

may. Denotes an option or alternative.

shall. Denotes a mandatory specification or requirement.

should. Denotes an advisory specification or recommendation.

3.5 Definitions.

Access Aisle. An accessible pedestrian space between elements, such as parking spaces, seating, and desks, that provides clearances appropriate for use of the elements.

Accessible. Describes a site, building, facility, or portion thereof that complies with *these guidelines*.

Accessible Element. An *element* specified by *these guidelines* (for example, telephone, controls, and the like).

Accessible Route. A continuous unobstructed path connecting all accessible elements and spaces of a building or facility. Interior accessible routes may include corridors, floors, ramps, elevators, lifts, and clear floor space at fixtures. Exterior accessible routes may include parking access aisles, curb ramps, *crosswalks at vehicular ways*, walks, ramps, and lifts.

Accessible Space. *Space that complies with these guidelines.*

Adaptability. The ability of certain building spaces and elements, such as kitchen counters, sinks, and grab bars, to be added or altered so as to accommodate the needs of *individuals with or without disabilities* or to accommodate the needs of persons with different types or degrees of disability.

Addition. *An expansion, extension, or increase in the gross floor area of a building or facility.*

Administrative Authority. A governmental agency that adopts or enforces regulations and *guidelines* for the design, construction, or *alteration* of buildings and facilities.

Alteration. *An alteration is a change to a building or facility made by, on behalf of, or for the use of a public accommodation or commercial facility, that affects or could affect the usability of the building or facility or part thereof. Alterations include, but are not limited to, remodeling, renovation, rehabilitation, reconstruction, historic restoration, changes or rearrangement of the structural parts or elements, and changes or rearrangement in the plan configuration of walls and full-height partitions. Normal maintenance, reroofing, painting or wallpapering, or changes to mechanical and electrical systems are not alterations unless they affect the usability of the building or facility.*

Area of Rescue Assistance. *An area, which has direct access to an exit, where people who are unable to use stairs may remain temporarily in safety to await further instructions or assistance during emergency evacuation.*

Assembly Area. A room or space accommodating a *group of* individuals for recreational, educational, political, social, or amusement purposes, or for the consumption of food and drink.

Automatic Door. A door equipped with a power-operated mechanism and controls that open and close the door automatically upon receipt of a momentary actuating signal. The switch that begins the automatic cycle may be a photoelectric device, floor mat, or manual switch (see power-assisted door).

3.5 Definitions

Building. Any structure used and intended for supporting or sheltering any use or occupancy.

Circulation Path. An exterior or interior way of passage from one place to another for pedestrians, including, but not limited to, walks, hallways, courtyards, stairways, and stair landings.

Clear. Unobstructed.

Clear Floor Space. *The minimum unobstructed floor or ground space required to accommodate a single, stationary wheelchair and occupant.*

Closed Circuit Telephone. *A telephone with dedicated line(s) such as a house phone, courtesy phone or phone that must be used to gain entrance to a facility.*

Common Use. Refers to those interior and exterior rooms, spaces, or elements that are made available for the use of a restricted group of people (for example, *occupants of a homeless shelter*, the occupants of an office building, or the guests of such occupants).

Cross Slope. The slope that is perpendicular to the direction of travel (see running slope).

Curb Ramp. A short ramp cutting through a curb or built up to it.

Detectable Warning. *A standardized surface feature built in or applied to walking surfaces or other elements to warn visually impaired people of hazards on a circulation path.*

Dwelling Unit. A single unit which provides a kitchen or food preparation area, in addition to rooms and spaces for living, bathing, sleeping, and the like. *Dwelling units include a single family home or a townhouse used as a transient group home; an apartment building used as a shelter; guestrooms in a hotel that provide sleeping accommodations and food preparation areas; and other similar facilities used on a transient basis. For purposes of these guidelines, use of the term "Dwelling Unit" does not imply the unit is used as a residence.*

Egress, Means of. *A continuous and unobstructed way of exit travel from any point in a building or facility to a public way. A means of egress comprises vertical and horizontal travel and may include intervening room spaces, doorways, hallways, corridors, passageways, balconies, ramps, stairs, enclosures, lobbies, horizontal exits, courts and yards. An accessible means of egress is one that complies with these guidelines and does not include stairs, steps, or escalators. Areas of rescue assistance or evacuation elevators may be included as part of accessible means of egress.*

Element. *An architectural or mechanical component of a building, facility, space, or site, e.g., telephone, curb ramp, door, drinking fountain, seating, or water closet.*

Entrance. *Any access point to a building or portion of a building or facility used for the purpose of entering. An entrance includes the approach walk, the vertical access leading to the entrance platform, the entrance platform itself, vestibules if provided, the entry door(s) or gate(s), and the hardware of the entry door(s) or gate(s).*

Facility. *All or any portion of buildings, structures, site improvements, complexes, equipment, roads, walks, passageways, parking lots, or other real or personal property located on a site.*

Ground Floor. *Any occupiable floor less than one story above or below grade with direct access to grade. A building or facility always has at least one ground floor and may have more than one ground floor as where a split level entrance has been provided or where a building is built into a hillside.*

Mezzanine or Mezzanine Floor. *That portion of a story which is an intermediate floor level placed within the story and having occupiable space above and below its floor.*

Marked Crossing. A crosswalk or other identified path intended for pedestrian use in crossing a vehicular way.

Multifamily Dwelling. Any building containing more than two dwelling units.

Occupiable. *A room or enclosed space designed for human occupancy in which individuals congregate for amusement, educational or similar purposes, or in which occupants are engaged at labor, and which is equipped with means of egress, light, and ventilation.*

3.5 Definitions

Operable Part. A part of a piece of equipment or appliance used to insert or withdraw objects, or to activate, deactivate, or adjust the equipment or appliance (for example, coin slot, pushbutton, handle).

Path of Travel. *(Reserved).*

Power-assisted Door. A door used *for human passage* with a mechanism that helps to open the door, or relieves the opening resistance of a door, upon the activation of a switch or a continued force applied to the door itself.

Public Use. Describes interior or exterior rooms or spaces that are made available to the general public. Public use may be provided at a building or facility that is privately or publicly owned.

Ramp. A walking surface which has a running slope greater than 1:20.

Running Slope. The slope that is parallel to the direction of travel (see cross slope).

Service Entrance. An entrance intended primarily for delivery of goods or services.

Signage. *Displayed* verbal, symbolic, *tactile,* and pictorial information.

Site. A parcel of land bounded by a property line or a designated portion of a public right-of-way.

Site Improvement. Landscaping, paving for pedestrian and vehicular ways, outdoor lighting, recreational facilities, and the like, added to a site.

Sleeping Accommodations. Rooms in which people sleep; for example, dormitory and hotel or motel guest rooms or suites.

Space. *A definable area, e.g., room, toilet room, hall, assembly area, entrance, storage room, alcove, courtyard, or lobby.*

Story. *That portion of a building included between the upper surface of a floor and upper surface of the floor or roof next above. If such portion of a building does not include occupiable space, it is not considered a story for purposes of these guidelines. There may be more than one floor level within a story as in the case of a mezzanine or mezzanines.*

Structural Frame. The structural frame shall be considered to be the columns and the girders, beams, trusses and spandrels having direct connections to the columns and all other members which are essential to the stability of the building as a whole.

Tactile. Describes an object that can be perceived using the sense of touch.

Text Telephone. *Machinery or equipment that employs interactive graphic (i.e., typed) communications through the transmission of coded signals across the standard telephone network. Text telephones can include, for example, devices known as TDD's (telecommunication display devices or telecommunication devices for deaf persons) or computers.*

Transient Lodging. *A building, facility, or portion thereof, excluding inpatient medical care facilities, that contains one or more dwelling units or sleeping accommodations. Transient lodging may include, but is not limited to, resorts, group homes, hotels, motels, and dormitories.*

Vehicular Way. A route intended for vehicular traffic, such as a street, driveway, or parking lot.

Walk. An exterior pathway with a prepared surface intended for pedestrian use, including general pedestrian areas such as plazas and courts.

NOTE: Sections 4.1.1 through 4.1.7 are different from ANSI A117.1 in their entirety and are printed in standard type (ANSI A117.1 does not include scoping provisions).

4. ACCESSIBLE ELEMENTS AND SPACES: SCOPE AND TECHNICAL REQUIREMENTS.

4.1 Minimum Requirements

4.1.1* Application.

(1) General. All areas of newly designed or newly constructed buildings and facilities required to be accessible by 4.1.2 and 4.1.3 and altered portions of existing buildings and facilities required to be accessible by 4.1.6 shall comply with these guidelines, 4.1 through 4.35, unless otherwise provided in this section or as modified in a special application section.

(2) Application Based on Building Use. Special application sections 5 through 10 provide additional requirements for restaurants and cafeterias, medical care facilities, business and mercantile, libraries, accessible transient lodging, and transportation facilities. When a building or facility contains more than one use covered by a special application section, each portion shall comply with the requirements for that use.

(3)* Areas Used Only by Employees as Work Areas. Areas that are used only as work areas shall be designed and constructed so that individuals with disabilities can approach, enter, and exit the areas. These guidelines do not require that any areas used only as work areas be constructed to permit maneuvering within the work area or be constructed or equipped (i.e., with racks or shelves) to be accessible.

(4) Temporary Structures. These guidelines cover temporary buildings or facilities as well as permanent facilities. Temporary buildings and facilities are not of permanent construction but are extensively used or are essential for public use for a period of time. Examples of temporary buildings or facilities covered by these guidelines include, but are not limited to: reviewing stands, temporary classrooms, bleacher areas, exhibit areas, temporary banking facilities, temporary health screening services, or temporary safe pedestrian passageways around a construction site. Structures, sites and equipment directly associated with the actual processes of construction, such as scaffolding, bridging, materials hoists, or construction trailers are not included.

(5) General Exceptions.

(a) In new construction, a person or entity is not required to meet fully the requirements of these guidelines where that person or entity can demonstrate that it is structurally impracticable to do so. Full compliance will be considered structurally impracticable only in those rare circumstances when the unique characteristics of terrain prevent the incorporation of accessibility features. If full compliance with the requirements of these guidelines is structurally impracticable, a person or entity shall comply with the requirements to the extent it is not structurally impracticable. Any portion of the building or facility which can be made accessible shall comply to the extent that it is not structurally impracticable.

(b) Accessibility is not required to (i) observation galleries used primarily for security purposes; or (ii) in non-occupiable spaces accessed only by ladders, catwalks, crawl spaces, very narrow passageways, or freight (non-passenger) elevators, and frequented only by service personnel for repair purposes; such spaces include, but are not limited to, elevator pits, elevator penthouses, piping or equipment catwalks.

4.1.2 Accessible Sites and Exterior Facilities: New Construction. An accessible site shall meet the following minimum requirements:

(1) At least one accessible route complying with 4.3 shall be provided within the boundary of the site from public transportation stops, accessible parking spaces, passenger loading zones if provided, and public streets or sidewalks, to an accessible building entrance.

(2) At least one accessible route complying with 4.3 shall connect accessible buildings, accessible facilities, accessible elements, and accessible spaces that are on the same site.

(3) All objects that protrude from surfaces or posts into circulation paths shall comply with 4.4.

4.1.2 Accessible Sites and Exterior Facilities: New Construction

(4) Ground surfaces along accessible routes and in accessible spaces shall comply with 4.5.

(5) (a) If parking spaces are provided for self-parking by employees or visitors, or both, then accessible spaces complying with 4.6 shall be provided in each such parking area in conformance with the table below. Spaces required by the table need not be provided in the particular lot. They may be provided in a different location if equivalent or greater accessibility, in terms of distance from an accessible entrance, cost and convenience is ensured.

Total Parking in Lot	Required Minimum Number of Accessible Spaces
1 to 25	1
26 to 50	2
51 to 75	3
76 to 100	4
101 to 150	5
151 to 200	6
201 to 300	7
301 to 400	8
401 to 500	9
501 to 1000	2 percent of total
1001 and over	20 plus 1 for each 100 over 1000

Except as provided in (b), access aisles adjacent to accessible spaces shall be 60 in (1525 mm) wide minimum.

(b) One in every eight accessible spaces, but not less than one, shall be served by an access aisle 96 in (2440 mm) wide minimum and shall be designated "van accessible" as required by 4.6.4. The vertical clearance at such spaces shall comply with 4.6.5. All such spaces may be grouped on one level of a parking structure.

EXCEPTION: Provision of all required parking spaces in conformance with "Universal Parking Design" (see appendix A4.6.3) is permitted.

(c) If passenger loading zones are provided, then at least one passenger loading zone shall comply with 4.6.6.

(d) At facilities providing medical care and other services for persons with mobility impairments, parking spaces complying with 4.6 shall be provided in accordance with 4.1.2(5)(a) except as follows:

(i) Outpatient units and facilities: 10 percent of the total number of parking spaces provided serving each such outpatient unit or facility;

(ii) Units and facilities that specialize in treatment or services for persons with mobility impairments: 20 percent of the total number of parking spaces provided serving each such unit or facility.

(e)*Valet parking: Valet parking facilities shall provide a passenger loading zone complying with 4.6.6 located on an accessible route to the entrance of the facility. Paragraphs 5(a), 5(b), and 5(d) of this section do not apply to valet parking facilities.

(6) If toilet facilities are provided on a site, then each such public or common use toilet facility shall comply with 4.22. If bathing facilities are provided on a site, then each such public or common use bathing facility shall comply with 4.23.

For single user portable toilet or bathing units clustered at a single location, at least 5% but no less than one toilet unit or bathing unit complying with 4.22 or 4.23 shall be installed at each cluster whenever typical inaccessible units are provided. Accessible units shall be identified by the International Symbol of Accessibility.

EXCEPTION: Portable toilet units at construction sites used exclusively by construction personnel are not required to comply with 4.1.2(6).

(7) Building Signage. Signs which designate permanent rooms and spaces shall comply with 4.30.1, 4.30.4, 4.30.5 and 4.30.6. Other signs which provide direction to, or information about, functional spaces of the building shall comply with 4.30.1, 4.30.2, 4.30.3, and 4.30.5. Elements and spaces of accessible facilities which shall be identified by the International Symbol of Accessibility and which shall comply with 4.30.7 are:

(a) Parking spaces designated as reserved for individuals with disabilities;

(b) Accessible passenger loading zones;

(c) Accessible entrances when not all are accessible (inaccessible entrances shall have directional signage to indicate the route to the nearest accessible entrance);

(d) Accessible toilet and bathing facilities when not all are accessible.

4.1.3 Accessible Buildings: New Construction. Accessible buildings and facilities shall meet the following minimum requirements:

(1) At least one accessible route complying with 4.3 shall connect accessible building or facility entrances with all accessible spaces and elements within the building or facility.

(2) All objects that overhang or protrude into circulation paths shall comply with 4.4.

(3) Ground and floor surfaces along accessible routes and in accessible rooms and spaces shall comply with 4.5.

(4) Interior and exterior stairs connecting levels that are not connected by an elevator, ramp, or other accessible means of vertical access shall comply with 4.9.

(5)* One passenger elevator complying with 4.10 shall serve each level, including mezzanines, in all multi-story buildings and facilities unless exempted below. If more than one elevator is provided, each full passenger elevator shall comply with 4.10.

EXCEPTION 1: Elevators are not required in facilities that are less than three stories or that have less than 3000 square feet per story unless the building is a shopping center, a shopping mall, or the professional office of a health care provider, or another type of facility as determined by the Attorney General. The elevator exemption set forth in this paragraph does not obviate or limit in any way the obligation to comply with the other accessibility requirements established in section 4.1.3. For example, floors above or below the accessible ground floor must meet the requirements of this section except for elevator service. If toilet or bathing facilities are provided on a level not served by an elevator, then toilet or bathing facilities must be provided on the accessible ground floor. In new construction if a building or facility is eligible for this exemption but a full passenger elevator is nonetheless planned, that elevator shall meet the requirements of 4.10 and shall serve each level in the building. A full passenger elevator that provides service from a garage to only one level of a building or facility is not required to serve other levels.

EXCEPTION 2: Elevator pits, elevator penthouses, mechanical rooms, piping or equipment catwalks are exempted from this requirement.

EXCEPTION 3: Accessible ramps complying with 4.8 may be used in lieu of an elevator.

EXCEPTION 4: Platform lifts (wheelchair lifts) complying with 4.11 of this guideline and applicable state or local codes may be used in lieu of an elevator only under the following conditions:

(a) To provide an accessible route to a performing area in an assembly occupancy.

(b) To comply with the wheelchair viewing position line-of-sight and dispersion requirements of 4.33.3.

(c) To provide access to incidental occupiable spaces and rooms which are not open to the general public and which house no more than five persons, including but not limited to equipment control rooms and projection booths.

(d) To provide access where existing site constraints or other constraints make use of a ramp or an elevator infeasible.

(6) Windows: (Reserved).

(7) Doors:

(a) At each accessible entrance to a building or facility, at least one door shall comply with 4.13.

(b) Within a building or facility, at least one door at each accessible space shall comply with 4.13.

(c) Each door that is an element of an accessible route shall comply with 4.13.

4.1.3 Accessible Buildings: New Construction

(d) Each door required by 4.3.10, Egress, shall comply with 4.13.

(8) In new construction, at a minimum, the requirements in (a) and (b) below shall be satisfied independently:

(a)(i) At least 50% of all public entrances (excluding those in (b) below) must be accessible. At least one must be a ground floor entrance. Public entrances are any entrances that are not loading or service entrances.

(ii) Accessible entrances must be provided in a number at least equivalent to the number of exits required by the applicable building/fire codes. (This paragraph does not require an increase in the total number of entrances planned for a facility.)

(iii) An accessible entrance must be provided to each tenancy in a facility (for example, individual stores in a strip shopping center).

One entrance may be considered as meeting more than one of the requirements in (a). Where feasible, accessible entrances shall be the entrances used by the majority of people visiting or working in the building.

(b)(i) In addition, if direct access is provided for pedestrians from an enclosed parking garage to the building, at least one direct entrance from the garage to the building must be accessible.

(ii) If access is provided for pedestrians from a pedestrian tunnel or elevated walkway, one entrance to the building from each tunnel or walkway must be accessible.

One entrance may be considered as meeting more than one of the requirements in (b).

Because entrances also serve as emergency exits whose proximity to all parts of buildings and facilities is essential, it is preferable that all entrances be accessible.

(c) If the only entrance to a building, or tenancy in a facility, is a service entrance, that entrance shall be accessible.

(d) Entrances which are not accessible shall have directional signage complying with 4.30.1, 4.30.2, 4.30.3, and 4.30.5, which indicates the location of the nearest accessible entrance.

(9)* In buildings or facilities, or portions of buildings or facilities, required to be accessible, accessible means of egress shall be provided in the same number as required for exits by local building/life safety regulations. Where a required exit from an occupiable level above or below a level of accessible exit discharge is not accessible, an area of rescue assistance shall be provided on each such level (in a number equal to that of inaccessible required exits). Areas of rescue assistance shall comply with 4.3.11. A horizontal exit, meeting the requirements of local building/life safety regulations, shall satisfy the requirement for an area of rescue assistance.

EXCEPTION: Areas of rescue assistance are not required in buildings or facilities having a supervised automatic sprinkler system.

(10)* Drinking Fountains:

(a) Where only one drinking fountain is provided on a floor there shall be a drinking fountain which is accessible to individuals who use wheelchairs in accordance with 4.15 and one accessible to those who have difficulty bending or stooping. (This can be accommodated by the use of a "hi-lo" fountain; by providing one fountain accessible to those who use wheelchairs and one fountain at a standard height convenient for those who have difficulty bending; by providing a fountain accessible under 4.15 and a water cooler; or by such other means as would achieve the required accessibility for each group on each floor.)

(b) Where more than one drinking fountain or water cooler is provided on a floor, 50% of those provided shall comply with 4.15 and shall be on an accessible route.

(11) Toilet Facilities: If toilet rooms are provided, then each public and common use toilet room shall comply with 4.22. Other toilet rooms provided for the use of occupants of specific spaces (i.e., a private toilet room for the occupant of a private office) shall be adaptable. If bathing rooms are provided, then each public and common use bathroom shall comply with 4.23. Accessible toilet rooms and bathing facilities shall be on an accessible route.

4.1.3 Accessible Buildings: New Construction

(12) Storage, Shelving and Display Units:

(a) If fixed or built-in storage facilities such as cabinets, shelves, closets, and drawers are provided in accessible spaces, at least one of each type provided shall contain storage space complying with 4.25. Additional storage may be provided outside of the dimensions required by 4.25.

(b) Shelves or display units allowing self-service by customers in mercantile occupancies shall be located on an accessible route complying with 4.3. Requirements for accessible reach range do not apply.

(13) Controls and operating mechanisms in accessible spaces, along accessible routes, or as parts of accessible elements (for example, light switches and dispenser controls) shall comply with 4.27.

(14) If emergency warning systems are provided, then they shall include both audible alarms and visual alarms complying with 4.28. Sleeping accommodations required to comply with 9.3 shall have an alarm system complying with 4.28. Emergency warning systems in medical care facilities may be modified to suit standard health care alarm design practice.

(15) Detectable warnings shall be provided at locations as specified in 4.29.

(16) Building Signage:

(a) Signs which designate permanent rooms and spaces shall comply with 4.30.1, 4.30.4, 4.30.5 and 4.30.6.

(b) Other signs which provide direction to or information about functional spaces of the building shall comply with 4.30.1, 4.30.2, 4.30.3, and 4.30.5.

EXCEPTION: Building directories, menus, and all other signs which are temporary are not required to comply.

(17) Public Telephones:

(a) If public pay telephones, public closed circuit telephones, or other public telephones are provided, then they shall comply with 4.31.2 through 4.31.8 to the extent required by the following table:

Number of each type of telephone provided on each floor	Number of telephones required to comply with 4.31.2 through 4.31.8[1]
1 or more single unit	1 per floor
1 bank[2]	1 per floor
2 or more banks[2]	1 per bank. Accessible unit may be installed as a single unit in proximity (either visible or with signage) to the bank. At least one public telephone per floor shall meet the requirements for a forward reach telephone[3].

[1] Additional public telephones may be installed at any height. Unless otherwise specified, accessible telephones may be either forward or side reach telephones.

[2] A bank consists of two or more adjacent public telephones, often installed as a unit.

[3] EXCEPTION: For exterior installations only, if dial tone first service is available, then a side reach telephone may be installed instead of the required forward reach telephone (i.e., one telephone in proximity to each bank shall comply with 4.31).

(b)* All telephones required to be accessible and complying with 4.31.2 through 4.31.8 shall be equipped with a volume control. In addition, 25 percent, but never less than one, of all other public telephones provided shall be equipped with a volume control and shall be dispersed among all types of public telephones, including closed circuit telephones, throughout the building or facility. Signage complying with applicable provisions of 4.30.7 shall be provided.

(c) The following shall be provided in accordance with 4.31.9:

(i) if a total number of four or more public pay telephones (including both interior and exterior phones) is provided at a site, and at least one is in an interior location, then at least one interior public text telephone shall be provided.

(ii) if an interior public pay telephone is provided in a stadium or arena, in a convention center, in a hotel with a convention center, or

4.1.3 Accessible Buildings: New Construction

in a covered mall, at least one interior public text telephone shall be provided in the facility.

(iii) if a public pay telephone is located in or adjacent to a hospital emergency room, hospital recovery room, or hospital waiting room, one public text telephone shall be provided at each such location.

(d) Where a bank of telephones in the interior of a building consists of three or more public pay telephones, at least one public pay telephone in each such bank shall be equipped with a shelf and outlet in compliance with 4.31.9(2).

(18) If fixed or built-in seating or tables (including, but not limited to, study carrels and student laboratory stations), are provided in accessible public or common use areas, at least five percent (5%), but not less than one, of the fixed or built-in seating areas or tables shall comply with 4.32. An accessible route shall lead to and through such fixed or built-in seating areas, or tables.

(19)* Assembly areas:

(a) in places of assembly with fixed seating accessible wheelchair locations shall comply with 4.33.2, 4.33.3, and 4.33.4 and shall be provided consistent with the following table:

Capacity of Seating in Assembly Areas	Number of Required Wheelchair Locations
4 to 25	1
26 to 50	2
51 to 300	4
301 to 500	6
over 500	6, plus 1 additional space for each total seating capacity increase of 100

In addition, one percent, but not less than one, of all fixed seats shall be aisle seats with no armrests on the aisle side, or removable or folding armrests on the aisle side. Each such seat shall be identified by a sign or marker. Signage notifying patrons of the availability of such seats shall be posted at the ticket office. Aisle seats are not required to comply with 4.33.4.

(b) This paragraph applies to assembly areas where audible communications are integral to the use of the space (e.g., concert and lecture halls, playhouses and movie theaters, meeting rooms, etc.). Such assembly areas, if (1) they accommodate at least 50 persons, or if they have audio-amplification systems, and (2) they have fixed seating, shall have a permanently installed assistive listening system complying with 4.33. For other assembly areas, a permanently installed assistive listening system, or an adequate number of electrical outlets or other supplementary wiring necessary to support a portable assistive listening system shall be provided. The minimum number of receivers to be provided shall be equal to 4 percent of the total number of seats, but in no case less than two. Signage complying with applicable provisions of 4.30 shall be installed to notify patrons of the availability of a listening system.

(20) Where automated teller machines are provided, each machine shall comply with the requirements of 4.34 except where two or more machines are provided at a location, then only one must comply.

EXCEPTION: Drive-up-only automated teller machines are not required to comply with 4.34.2 and 4.34.3.

(21) Where dressing and fitting rooms are provided for use by the general public, patients, customers or employees, 5 percent, but never less than one, of dressing rooms for each type of use in each cluster of dressing rooms shall be accessible and shall comply with 4.35.

Examples of types of dressing rooms are those serving different genders or distinct and different functions as in different treatment or examination facilities.

4.1.4 (Reserved).

4.1.5 Accessible Buildings: Additions. Each addition to an existing building or facility shall be regarded as an alteration. Each space or element added to the existing building or facility shall comply with the applicable provisions of 4.1.1 to 4.1.3, Minimum Requirements (for New Construction) and the applicable technical specifications of 4.2 through 4.35 and sections 5 through 10. Each addition that

affects or could affect the usability of an area containing a primary function shall comply with 4.1.6(2).

4.1.6 Accessible Buildings: Alterations.

(1) General. Alterations to existing buildings and facilities shall comply with the following:

(a) No alteration shall be undertaken which decreases or has the effect of decreasing accessibility or usability of a building or facility below the requirements for new construction at the time of alteration.

(b) If existing elements, spaces, or common areas are altered, then each such altered element, space, feature, or area shall comply with the applicable provisions of 4.1.1 to 4.1.3 Minimum Requirements (for New Construction). If the applicable provision for new construction requires that an element, space, or common area be on an accessible route, the altered element, space, or common area is not required to be on an accessible route except as provided in 4.1.6(2) (Alterations to an Area Containing a Primary Function.)

(c) If alterations of single elements, when considered together, amount to an alteration of a room or space in a building or facility, the entire space shall be made accessible.

(d) No alteration of an existing element, space, or area of a building or facility shall impose a requirement for greater accessibility than that which would be required for new construction. For example, if the elevators and stairs in a building are being altered and the elevators are, in turn, being made accessible, then no accessibility modifications are required to the stairs connecting levels connected by the elevator. If stair modifications to correct unsafe conditions are required by other codes, the modifications shall be done in compliance with these guidelines unless technically infeasible.

(e) At least one interior public text telephone complying with 4.31.9 shall be provided if:

(i) alterations to existing buildings or facilities with less than four exterior or interior public pay telephones would increase the total number to four or more telephones with at least one in an interior location; or

(ii) alterations to one or more exterior or interior public pay telephones occur in an existing building or facility with four or more public telephones with at least one in an interior location.

(f) If an escalator or stair is planned or installed where none existed previously and major structural modifications are necessary for such installation, then a means of accessible vertical access shall be provided that complies with the applicable provisions of 4.7, 4.8, 4.10, or 4.11.

(g) In alterations, the requirements of 4.1.3(9), 4.3.10 and 4.3.11 do not apply.

(h)*Entrances: If a planned alteration entails alterations to an entrance, and the building has an accessible entrance, the entrance being altered is not required to comply with 4.1.3(8), except to the extent required by 4.1.6(2). If a particular entrance is not made accessible, appropriate accessible signage indicating the location of the nearest accessible entrance(s) shall be installed at or near the inaccessible entrance, such that a person with disabilities will not be required to retrace the approach route from the inaccessible entrance.

(i) If the alteration work is limited solely to the electrical, mechanical, or plumbing system, or to hazardous material abatement, or automatic sprinkler retrofitting, and does not involve the alteration of any elements or spaces required to be accessible under these guidelines, then 4.1.6(2) does not apply.

(j) EXCEPTION: In alteration work, if compliance with 4.1.6 is technically infeasible, the alteration shall provide accessibility to the maximum extent feasible. Any elements or features of the building or facility that are being altered and can be made accessible shall be made accessible within the scope of the alteration.

Technically Infeasible. Means, with respect to an alteration of a building or a facility, that it has little likelihood of being accomplished because existing structural conditions would require removing or altering a load-bearing member which is an essential part of the structural frame; or because other existing physical or site constraints prohibit modification or

4.1.6 Accessible Buildings: Alterations

addition of elements, spaces, or features which are in full and strict compliance with the minimum requirements for new construction and which are necessary to provide accessibility.

(k) EXCEPTION:

(i) These guidelines do not require the installation of an elevator in an altered facility that is less than three stories or has less than 3,000 square feet per story unless the building is a shopping center, a shopping mall, the professional office of a health care provider, or another type of facility as determined by the Attorney General.

(ii) The exemption provided in paragraph (i) does not obviate or limit in any way the obligation to comply with the other accessibility requirements established in these guidelines. For example, alterations to floors above or below the ground floor must be accessible regardless of whether the altered facility has an elevator. If a facility subject to the elevator exemption set forth in paragraph (i) nonetheless has a full passenger elevator, that elevator shall meet, to the maximum extent feasible, the accessibility requirements of these guidelines.

(2) Alterations to an Area Containing a Primary Function: In addition to the requirements of 4.1.6(1), an alteration that affects or could affect the usability of or access to an area containing a primary function shall be made so as to ensure that, to the maximum extent feasible, the path of travel to the altered area and the restrooms, telephones, and drinking fountains serving the altered area, are readily accessible to and usable by individuals with disabilities, unless such alterations are disproportionate to the overall alterations in terms of cost and scope (as determined under criteria established by the Attorney General).

(3) Special Technical Provisions for Alterations to Existing Buildings and Facilities:

(a) Ramps: Curb ramps and interior or exterior ramps to be constructed on sites or in existing buildings or facilities where space limitations prohibit the use of a 1:12 slope or less may have slopes and rises as follows:

(i) A slope between 1:10 and 1:12 is allowed for a maximum rise of 6 inches.

(ii) A slope between 1:8 and 1:10 is allowed for a maximum rise of 3 inches. A slope steeper than 1:8 is not allowed.

(b) Stairs: Full extension of handrails at stairs shall not be required in alterations where such extensions would be hazardous or impossible due to plan configuration.

(c) Elevators:

(i) If safety door edges are provided in existing automatic elevators, automatic door reopening devices may be omitted (see 4.10.6).

(ii) Where existing shaft configuration or technical infeasibility prohibits strict compliance with 4.10.9, the minimum car plan dimensions may be reduced by the minimum amount necessary, but in no case shall the inside car area be smaller than 48 in by 48 in.

(iii) Equivalent facilitation may be provided with an elevator car of different dimensions when usability can be demonstrated and when all other elements required to be accessible comply with the applicable provisions of 4.10. For example, an elevator of 47 in by 69 in (1195 mm by 1755 mm) with a door opening on the narrow dimension, could accommodate the standard wheelchair clearances shown in Figure 4.

(d) Doors:

(i) Where it is technically infeasible to comply with clear opening width requirements of 4.13.5, a projection of 5/8 in maximum will be permitted for the latch side stop.

(ii) If existing thresholds are 3/4 in high or less, and have (or are modified to have) a beveled edge on each side, they may remain.

(e) Toilet Rooms:

(i) Where it is technically infeasible to comply with 4.22 or 4.23, the installation of at least one unisex toilet/bathroom per floor, located in the same area as existing toilet facilities, will be permitted in lieu of modifying existing toilet facilities to be accessible. Each unisex toilet room shall contain one water closet complying with 4.16 and one lavatory complying with 4.19, and the door shall have a privacy latch.

(ii) Where it is technically infeasible to install a required standard stall (Fig. 30(a)), or where other codes prohibit reduction of the fixture count (i.e., removal of a water closet in order to create a double-wide stall), either alternate stall (Fig.30(b)) may be provided in lieu of the standard stall.

(iii) When existing toilet or bathing facilities are being altered and are not made accessible, signage complying with 4.30.1, 4.30.2, 4.30.3, 4.30.5, and 4.30.7 shall be provided indicating the location of the nearest accessible toilet or bathing facility within the facility.

(f) Assembly Areas:

(i) Where it is technically infeasible to disperse accessible seating throughout an altered assembly area, accessible seating areas may be clustered. Each accessible seating area shall have provisions for companion seating and shall be located on an accessible route that also serves as a means of emergency egress.

(ii) Where it is technically infeasible to alter all performing areas to be on an accessible route, at least one of each type of performing area shall be made accessible.

(g) Platform Lifts (Wheelchair Lifts): In alterations, platform lifts (wheelchair lifts) complying with 4.11 and applicable state or local codes may be used as part of an accessible route. The use of lifts is not limited to the four conditions in exception 4 of 4.1.3(5).

(h) Dressing Rooms: In alterations where technical infeasibility can be demonstrated, one dressing room for each sex on each level shall be made accessible. Where only unisex dressing rooms are provided, accessible unisex dressing rooms may be used to fulfill this requirement.

4.1.7 Accessible Buildings: Historic Preservation.

(1) Applicability:

(a) General Rule. Alterations to a qualified historic building or facility shall comply with 4.1.6 Accessible Buildings: Alterations, the applicable technical specifications of 4.2 through 4.35 and the applicable special application sections 5 through 10 unless it is determined in accordance with the procedures in 4.1.7(2) that compliance with the requirements for accessible routes (exterior and interior), ramps, entrances, or toilets would threaten or destroy the historic significance of the building or facility in which case the alternative requirements in 4.1.7(3) may be used for the feature.

EXCEPTION: (Reserved).

(b) Definition. A qualified historic building or facility is a building or facility that is:

(i) Listed in or eligible for listing in the National Register of Historic Places; or

(ii) Designated as historic under an appropriate State or local law.

(2) Procedures:

(a) Alterations to Qualified Historic Buildings and Facilities Subject to Section 106 of the National Historic Preservation Act:

(i) Section 106 Process. Section 106 of the National Historic Preservation Act (16 U.S.C. 470 f) requires that a Federal agency with jurisdiction over a Federal, federally assisted, or federally licensed undertaking consider the effects of the agency's undertaking on buildings and facilities listed in or eligible for listing in the National Register of Historic Places and give the Advisory Council on Historic Preservation a reasonable opportunity to comment on the undertaking prior to approval of the undertaking.

(ii) ADA Application. Where alterations are undertaken to a qualified historic building or facility that is subject to section 106 of the National Historic Preservation Act, the Federal agency with jurisdiction over the undertaking shall follow the section 106 process. If the State Historic Preservation Officer or Advisory Council on Historic Preservation agrees that compliance with the requirements for accessible routes (exterior and interior), ramps, entrances, or toilets would threaten or destroy the historic significance of the building or facility, the alternative requirements in 4.1.7(3) may be used for the feature.

4.2 Space Allowance and Reach Ranges

(b) Alterations to Qualified Historic Buildings and Facilities Not Subject to Section 106 of the National Historic Preservation Act. Where alterations are undertaken to a qualified historic building or facility that is not subject to section 106 of the National Historic Preservation Act, if the entity undertaking the alterations believes that compliance with the requirements for accessible routes (exterior and interior), ramps, entrances, or toilets would threaten or destroy the historic significance of the building or facility and that the alternative requirements in 4.1.7(3) should be used for the feature, the entity should consult with the State Historic Preservation Officer. If the State Historic Preservation Officer agrees that compliance with the accessibility requirements for accessible routes (exterior and interior), ramps, entrances or toilets would threaten or destroy the historical significance of the building or facility, the alternative requirements in 4.1.7(3) may be used.

(c) Consultation With Interested Persons. Interested persons should be invited to participate in the consultation process, including State or local accessibility officials, individuals with disabilities, and organizations representing individuals with disabilities.

(d) Certified Local Government Historic Preservation Programs. Where the State Historic Preservation Officer has delegated the consultation responsibility for purposes of this section to a local government historic preservation program that has been certified in accordance with section 101(c) of the National Historic Preservation Act of 1966 (16 U.S.C. 470a (c)) and implementing regulations (36 CFR 61.5), the responsibility may be carried out by the appropriate local government body or official.

(3) Historic Preservation: Minimum Requirements:

(a) At least one accessible route complying with 4.3 from a site access point to an accessible entrance shall be provided.

EXCEPTION: A ramp with a slope no greater than 1:6 for a run not to exceed 2 ft (610 mm) may be used as part of an accessible route to an entrance.

(b) At least one accessible entrance complying with 4.14 which is used by the public shall be provided.

EXCEPTION: If it is determined that no entrance used by the public can comply with 4.14, then access at any entrance not used by the general public but open (unlocked) with directional signage at the primary entrance may be used. The accessible entrance shall also have a notification system. Where security is a problem, remote monitoring may be used.

(c) If toilets are provided, then at least one toilet facility complying with 4.22 and 4.1.6 shall be provided along an accessible route that complies with 4.3. Such toilet facility may be unisex in design.

(d) Accessible routes from an accessible entrance to all publicly used spaces on at least the level of the accessible entrance shall be provided. Access shall be provided to all levels of a building or facility in compliance with 4.1 whenever practical.

(e) Displays and written information, documents, etc., should be located where they can be seen by a seated person. Exhibits and signage displayed horizontally (e.g., open books), should be no higher than 44 in (1120 mm) above the floor surface.

NOTE: The technical provisions of sections 4.2 through 4.35 are the same as those of the American National Standard Institute's document A117.1-1980, except as noted in the text.

4.2 Space Allowance and Reach Ranges.

4.2.1* Wheelchair Passage Width. The minimum clear width for single wheelchair passage shall be 32 in (815 mm) at a point and 36 in (915 mm) continuously (see Fig. 1 and 24(e)).

4.2.2 Width for Wheelchair Passing. The minimum width for two wheelchairs to pass is 60 in (1525 mm) (see Fig. 2).

4.2.3* Wheelchair Turning Space. The space required for a wheelchair to make a 180-degree turn is a clear space of 60 in (1525 mm)

4.2.4* Clear Floor or Ground Space for Wheelchairs

diameter (see Fig. 3(a)) or a T-shaped space (see Fig. 3(b)).

4.2.4* Clear Floor or Ground Space for Wheelchairs.

4.2.4.1 Size and Approach. The minimum clear floor or ground space required to accommodate a single, stationary wheelchair and occupant is 30 in by 48 in (760 mm by 1220 mm) (see Fig. 4(a)). The minimum clear floor or ground space for wheelchairs may be positioned for forward or parallel approach to an object (see Fig. 4(b) and (c)). Clear floor or ground space for wheelchairs may be part of the knee space required under some objects.

4.2.4.2 Relationship of Maneuvering Clearance to Wheelchair Spaces. One full unobstructed side of the clear floor or ground space for a wheelchair shall adjoin or overlap an accessible route or adjoin another wheelchair clear floor space. If a clear floor space is located in an alcove or otherwise confined on all or part of three sides, additional maneuvering clearances shall be provided as shown in Fig. 4(d) and (e).

4.2.4.3 Surfaces for Wheelchair Spaces. Clear floor or ground spaces for wheelchairs shall comply with 4.5.

4.2.5* Forward Reach. If the clear floor space only allows forward approach to an object, the maximum high forward reach allowed shall be 48 in (1220 mm) (see Fig. 5(a)). *The minimum low forward reach is 15 in (380 mm).* If the high forward reach is over an obstruction, reach and clearances shall be as shown in Fig. 5(b).

4.2.6* Side Reach. If the clear floor space allows parallel approach by a person in a wheelchair, the maximum high side reach allowed shall be 54 in (1370 mm) and the low side reach shall be no less than 9 in (230 mm) above the floor (Fig. 6(a) and (b)). If the side reach is over an obstruction, the reach and clearances shall be as shown in Fig 6(c).

4.3 Accessible Route.

4.3.1* General. All walks, halls, corridors, aisles, *skywalks, tunnels,* and other spaces

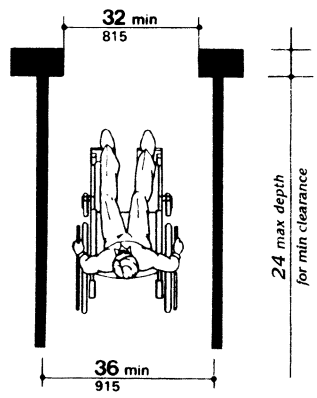

Fig. 1
Minimum Clear Width
for Single Wheelchair

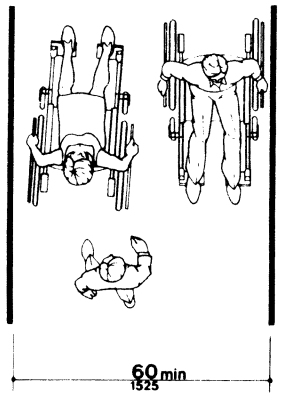

Fig. 2
Minimum Clear Width
for Two Wheelchairs

4.3 Accesssible Route

that are part of an accessible route shall comply with 4.3.

4.3.2 Location.

(1) At least one accessible route *within the boundary of the site* shall be provided from public transportation stops, accessible parking, and accessible passenger loading zones, and public streets or sidewalks to the accessible building entrance they serve. *The accessible route shall, to the maximum extent feasible, coincide with the route for the general public.*

(2) At least one accessible route shall connect accessible buildings, facilities, elements, and spaces that are on the same site.

(3) At least one accessible route shall connect accessible building or facility entrances with all accessible spaces and elements and with all accessible dwelling units within the building or facility.

(4) An accessible route shall connect at least one accessible entrance of each accessible dwelling unit with those exterior and interior spaces and facilities that serve the accessible dwelling unit.

4.3.3 Width. The minimum clear width of an accessible route shall be 36 in (915 mm) except at doors (see 4.13.5 and 4.13.6). If a person in a wheelchair must make a turn around an obstruction, the minimum clear width of the accessible route shall be as shown in Fig. 7(a) and (b).

4.3.4 Passing Space. If an accessible route has less than 60 in (1525 mm) clear width, then passing spaces at least 60 in by 60 in (1525 mm by 1525 mm) shall be located at reasonable intervals not to exceed 200 ft (61 m). A T-intersection of two corridors or walks is an acceptable passing place.

4.3.5 Head Room. Accessible routes shall comply with 4.4.2.

4.3.6 Surface Textures. The surface of an accessible route shall comply with 4.5.

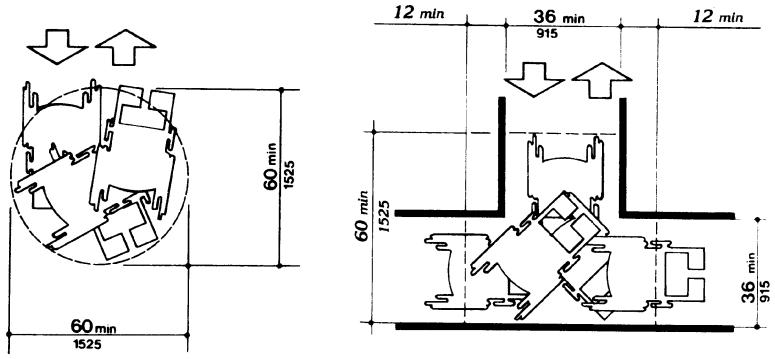

(a)
60-in (1525-mm)-Diameter Space

(b)
T-Shaped Space for 180° Turns

Fig. 3
Wheelchair Turning Space

4.3 Accessible Route

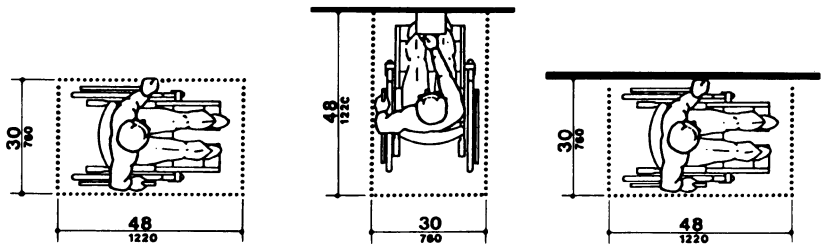

(a)
Clear Floor Space

(b)
Forward Approach

(c)
Parallel Approach

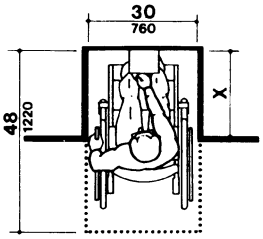

NOTE: x ≤ 24 in (610 mm).

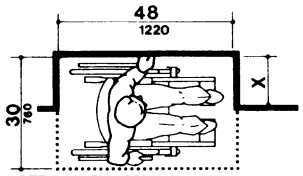

NOTE: x ≤ 15 in (380 mm).

(d)
Clear Floor Space in Alcoves

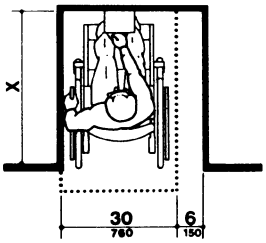

NOTE: If x > 24 in (610 mm), then an additional maneuvering clearance of 6 in (150 mm) shall be provided as shown.

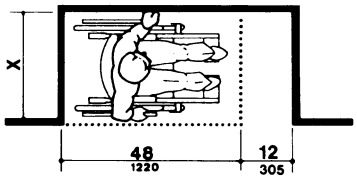

NOTE: If x > 15 in (380 mm), then an additional maneuvering clearance of 12 in (305 mm) shall be provided as shown.

(e)
Additional Maneuvering Clearances for Alcoves

Fig. 4
Minimum Clear Floor Space for Wheelchairs

17

4.3 Accessible Route

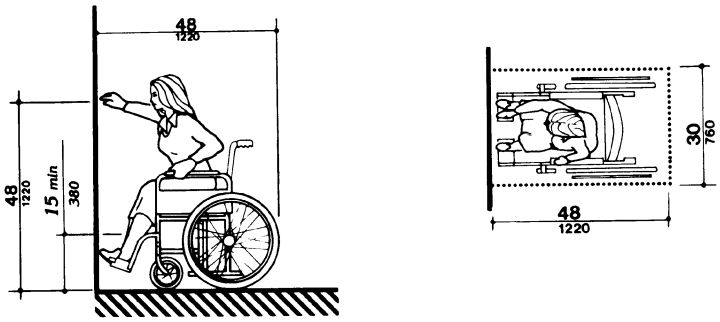

(a)
High Forward Reach Limit

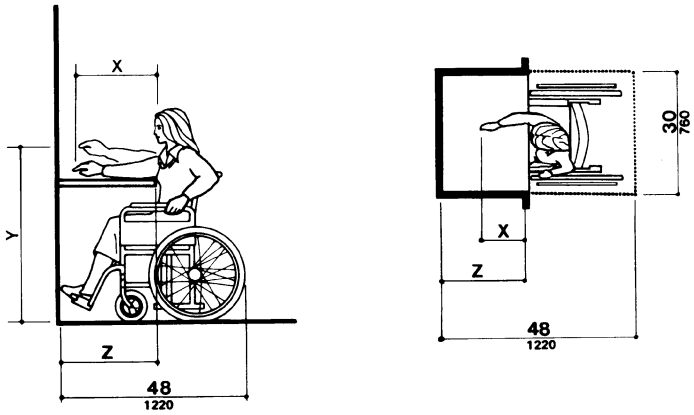

NOTE: x shall be ≤ 25 in (635 mm); z shall be ≥ x. When x < 20 in (510 mm), then y shall be 48 in (1220 mm) maximum. When x is 20 to 25 in (510 to 635 mm), then y shall be 44 in (1120 mm) maximum.

(b)
Maximum Forward Reach over an Obstruction

Fig. 5
Forward Reach

4.3.7 Slope

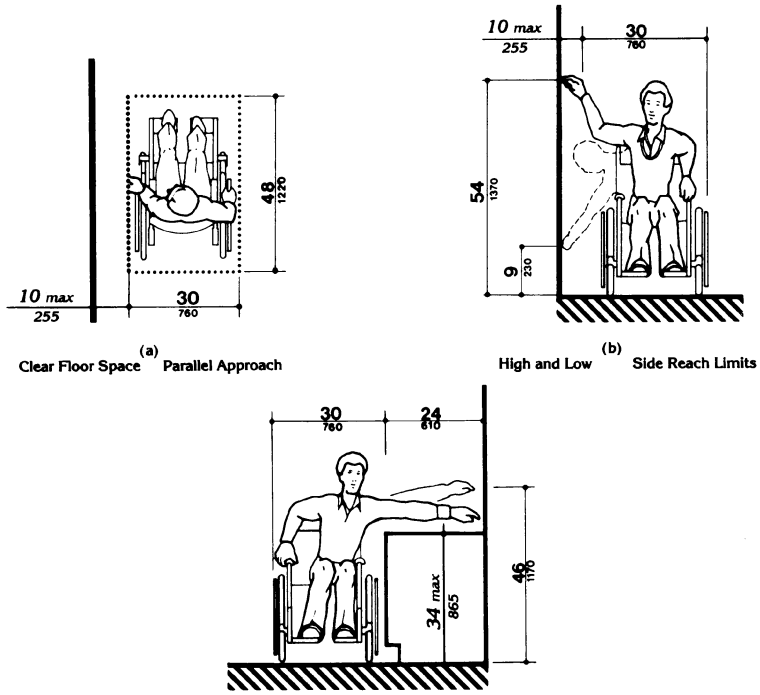

Fig. 6
Side Reach

4.3.7 Slope. An accessible route with a running slope greater than 1:20 is a ramp and shall comply with 4.8. Nowhere shall the cross slope of an accessible route exceed 1:50.

4.3.8 Changes in Levels. Changes in levels along an accessible route shall comply with 4.5.2. If an accessible route has changes in level greater than 1/2 in (13 mm), then a curb ramp, ramp, elevator, or platform lift *(as permitted in 4.1.3 and 4.1.6)* shall be provided that complies with 4.7, 4.8, 4.10, or 4.11, respectively. An accessible route does not include stairs, steps, or escalators. See definition of "egress, means of" in 3.5.

4.3.9 Doors. Doors along an accessible route shall comply with 4.13.

4.3.10* Egress

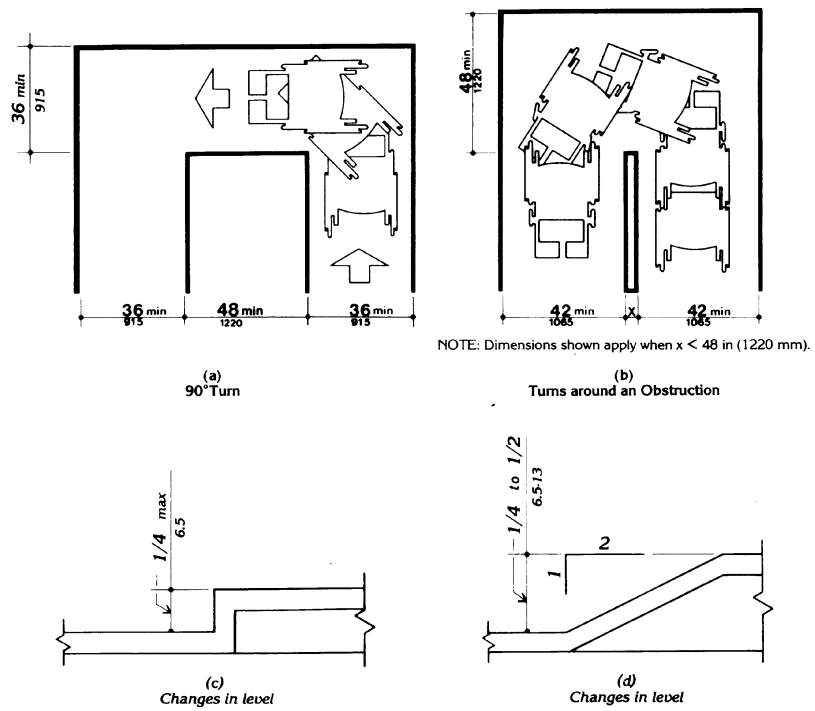

Fig. 7
Accessible Route

4.3.10* Egress. Accessible routes serving any accessible space or element shall also serve as a means of egress for emergencies or connect to an accessible area of *rescue assistance.*

4.3.11 Areas of Rescue Assistance.

4.3.11.1 Location and Construction. *An area of rescue assistance shall be one of the following:*

(1) A portion of a stairway landing within a smokeproof enclosure (complying with local requirements).

(2) A portion of an exterior exit balcony located immediately adjacent to an exit stairway when the balcony complies with local requirements for exterior exit balconies. Openings to the interior of the building located within 20 feet (6 m) of the

area of rescue assistance shall be protected with fire assemblies having a three-fourths hour fire protection rating.

(3) A portion of a one-hour fire-resistive corridor (complying with local requirements for fire-resistive construction and for openings) located immediately adjacent to an exit enclosure.

(4) A vestibule located immediately adjacent to an exit enclosure and constructed to the same fire-resistive standards as required for corridors and openings.

(5) A portion of a stairway landing within an exit enclosure which is vented to the exterior and is separated from the interior of the building with not less than one-hour fire-resistive doors.

(6) When approved by the appropriate local authority, an area or a room which is separated from other portions of the building by a smoke barrier. Smoke barriers shall have a fire-resistive rating of not less than one hour and shall completely enclose the area or room. Doors in the smoke barrier shall be tight-fitting smoke- and draft-control assemblies having a fire-protection rating of not less than 20 minutes and shall be self-closing or automatic closing. The area or room shall be provided with an exit directly to an exit enclosure. Where the room or area exits into an exit enclosure which is required to be of more than one-hour fire-resistive construction, the room or area shall have the same fire-resistive construction, including the same opening protection, as required for the adjacent exit enclosure.

(7) An elevator lobby when elevator shafts and adjacent lobbies are pressurized as required for smokeproof enclosures by local regulations and when complying with requirements herein for size, communication, and signage. Such pressurization system shall be activated by smoke detectors on each floor located in a manner approved by the appropriate local authority. Pressurization equipment and its duct work within the building shall be separated from other portions of the building by a minimum two-hour fire-resistive construction.

4.3.11.2 Size. *Each area of rescue assistance shall provide at least two accessible areas each being not less than 30 inches by 48 inches (760 mm by 1220 mm). The area of rescue assistance shall not encroach on any required exit width. The total number of such 30-inch by 48-inch (760 mm by 1220 mm) areas per story shall be not less than one for every 200 persons of calculated occupant load served by the area of rescue assistance.*

EXCEPTION: The appropriate local authority may reduce the minimum number of 30-inch by 48-inch (760 mm by 1220 mm) areas to one for each area of rescue assistance on floors where the occupant load is less than 200.

4.3.11.3* Stairway Width. *Each stairway adjacent to an area of rescue assistance shall have a minimum clear width of 48 inches between handrails.*

4.3.11.4* Two-way Communication. *A method of two-way communication, with both visible and audible signals, shall be provided between each area of rescue assistance and the primary entry. The fire department or appropriate local authority may approve a location other than the primary entry.*

4.3.11.5 Identification. *Each area of rescue assistance shall be identified by a sign which states "AREA OF RESCUE ASSISTANCE" and displays the international symbol of accessibility. The sign shall be illuminated when exit sign illumination is required. Signage shall also be installed at all inaccessible exits and where otherwise necessary to clearly indicate the direction to areas of rescue assistance. In each area of rescue assistance, instructions on the use of the area under emergency conditions shall be posted adjoining the two-way communication system.*

4.4 Protruding Objects.

4.4.1* General. Objects projecting from walls (for example, telephones) with their leading edges between 27 in and 80 in (685 mm and 2030 mm) above the finished floor shall protrude no more than 4 in (100 mm) into walks, halls, corridors, passageways, or aisles (see Fig. 8(a)). Objects mounted with their leading edges at or below 27 in (685 mm) above the finished floor may protrude any amount (see Fig. 8(a) and (b)). Free-standing objects mounted on posts or pylons may overhang 12 in (305 mm) maximum from 27 in to 80 in (685 mm to 2030 mm) above the ground or

4.4 Protruding Objects

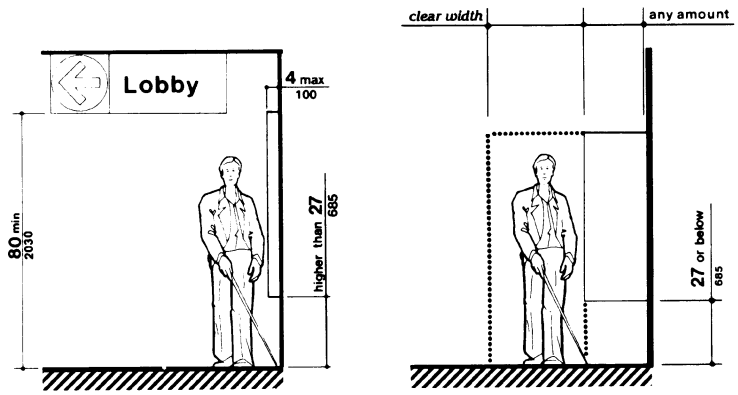

Fig. 8 (a)
Walking Parallel to a Wall

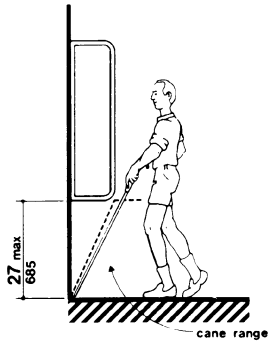

Fig. 8 (b)
Walking Perpendicular to a Wall

Fig. 8
Protruding Objects

finished floor (see Fig. 8(c) and (d)). Protruding objects shall not reduce the clear width of an accessible route or maneuvering space (see Fig. 8(e)).

4.4.2 Head Room. Walks, halls, corridors, passageways, aisles, or other circulation spaces shall have 80 in (2030 mm) minimum clear head room (see Fig. 8(a)). *If vertical clearance of an area adjoining an accessible route is reduced to less than 80 in (nominal dimension), a barrier to warn blind or visually-impaired persons shall be provided (see Fig. 8(c-1)).*

4.5 Ground and Floor Surfaces.

4.5.1* General. Ground and floor surfaces along accessible routes and in accessible rooms and spaces including floors, walks, ramps, stairs, and curb ramps, shall be stable, firm, slip-resistant, and shall comply with 4.5.

4.5.2 Changes in Level. Changes in level up to 1/4 in (6 mm) may be vertical and without edge treatment *(see Fig. 7(c))*. Changes in level between 1/4 in and 1/2 in (6 mm and 13 mm)

4.4 Protruding Objects

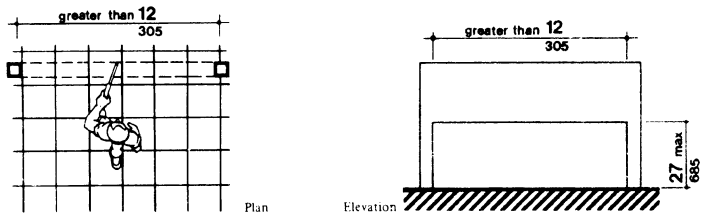

Fig. 8 (c) Free-Standing Overhanging Objects

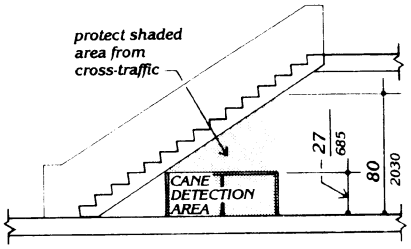

Fig. 8 (c-1) Overhead Hazards

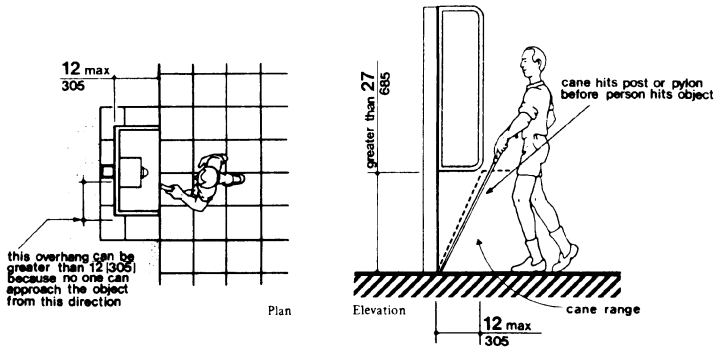

Fig. 8 (d)
Objects Mounted on Posts or Pylons

Fig. 8
Protruding Objects *(Continued)*

4.5 Ground and Floor Surfaces

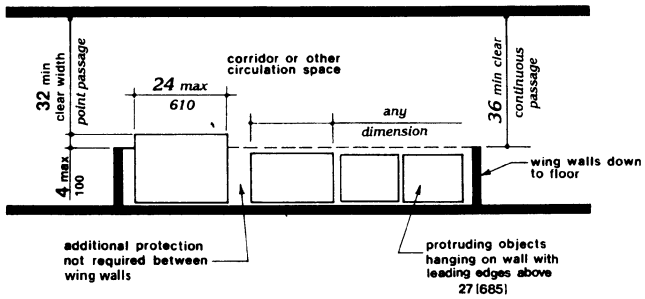

Fig. 8 (e)
Example of Protection around Wall-Mounted Objects and Measurements of Clear Widths

Fig. 8
Protruding Objects *(Continued)*

shall be beveled with a slope no greater than 1:2 *(see Fig. 7(d))*. Changes in level greater than 1/2 in (13 mm) shall be accomplished by means of a ramp that complies with 4.7 or 4.8.

4.5.3* Carpet. If carpet or carpet tile is used on a ground or floor surface, then it shall be securely attached; have a firm cushion, pad, or backing, or no cushion or pad; and have a level loop, textured loop, level cut pile, or level cut/uncut pile texture. The maximum pile *thickness* shall be 1/2 in (13 mm) (see Fig. 8(f)). Exposed edges of carpet shall be fastened to floor surfaces and have trim along the entire length of the exposed edge. Carpet edge trim shall comply with 4.5.2.

4.5.4 Gratings. If gratings are located in walking surfaces, then they shall have spaces no greater than 1/2 in (13 mm) wide in one direction *(see Fig. 8(g))*. If gratings have elongated openings, then they shall be placed so that the long dimension is perpendicular to the dominant direction of travel *(see Fig. 8(h))*.

4.6 Parking and Passenger Loading Zones.

4.6.1 Minimum Number. *Parking spaces required to be accessible by 4.1 shall comply with 4.6.2 through 4.6.5. Passenger loading zones required to be accessible by 4.1 shall comply with 4.6.5 and 4.6.6.*

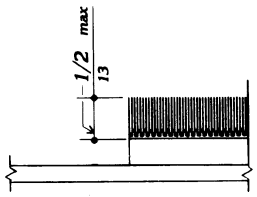

Fig. 8 (f)
Carpet Pile Thickness

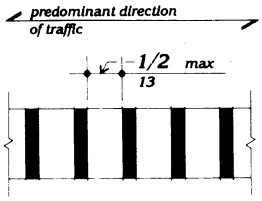

Fig. 8 (g)
Gratings

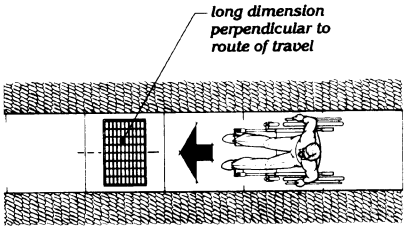

Fig. 8 (h)
Grating Orientation

4.6.2 Location. *Accessible parking spaces serving* a particular building shall be located on the shortest accessible route of travel *from adjacent parking* to an accessible entrance. *In parking facilities* that do not serve a particular building, *accessible parking* shall be located on the shortest accessible route *of travel* to an accessible pedestrian entrance of the parking facility. *In buildings with multiple accessible entrances with adjacent parking, accessible parking spaces shall be dispersed and located closest to the accessible entrances.*

4.6.3* Parking Spaces. *Accessible* parking spaces shall be at least 96 in (2440 mm) wide. Parking access aisles shall be part of an accessible route to the building or facility entrance and shall comply with 4.3. Two accessible parking spaces may share a common access aisle (see Fig. 9). Parked vehicle overhangs shall not reduce the clear width of an accessible route. *Parking spaces and access aisles shall be level with surface slopes not exceeding 1:50 (2%) in all directions.*

4.6.4* Signage. Accessible parking spaces shall be designated as reserved by a sign showing the symbol of accessibility (see 4.30.7). *Spaces complying with 4.1.2(5)(b) shall have an additional sign "Van-Accessible" mounted below the symbol of accessibility.* Such signs shall *be located so they cannot* be obscured by a vehicle parked in the space.

4.6.5* *Vertical Clearance.* *Provide minimum vertical clearance of 114 in (2895 mm) at accessible passenger loading zones and along at least one vehicle access route to such areas from site entrance(s) and exit(s). At parking spaces complying with 4.1.2(5)(b), provide minimum vertical clearance of 98 in (2490 mm) at the parking space and along at least one vehicle access route to such spaces from site entrance(s) and exit(s).*

4.6.6 Passenger Loading Zones. Passenger loading zones shall provide an access aisle at least 60 in *(1525 mm)* wide and 20 ft *(240 in) (6100 mm)* long adjacent and parallel to the vehicle pull-up space (see Fig. 10). If there are curbs between the access aisle and the vehicle pull-up space, then a curb ramp complying with 4.7 shall be provided. *Vehicle standing spaces and access aisles shall be level with*

4.7 Curb Ramps

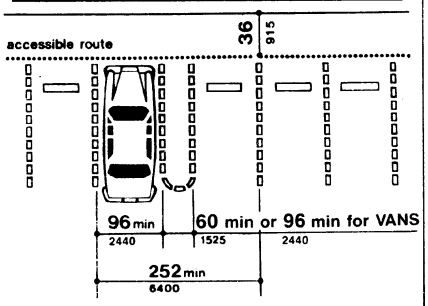

Fig. 9
Dimensions of Parking Spaces

surface slopes not exceeding 1:50 (2%) in all directions.

4.7 Curb Ramps.

4.7.1 Location. Curb ramps complying with 4.7 shall be provided wherever an accessible route crosses a curb.

4.7.2 Slope. Slopes of curb ramps shall comply with 4.8.2. The slope shall be measured as shown in Fig. 11. *Transitions from ramps to walks, gutters, or streets shall be flush and free of abrupt changes. Maximum slopes of adjoining gutters, road surface immediately adjacent to the curb ramp, or accessible route shall not exceed 1:20.*

4.7.3 Width. The minimum width of a curb ramp shall be 36 in (915 mm), exclusive of flared sides.

4.7.4 Surface. Surfaces of curb ramps shall comply with 4.5.

4.7.5 Sides of Curb Ramps. If a curb ramp is located where pedestrians must walk across the ramp, *or where it is not protected by handrails or guardrails,* it shall have flared sides; the maximum slope of the flare shall be 1:10 (see Fig. 12(a)). Curb ramps with returned curbs may be used where pedestrians would not normally walk across the ramp (see Fig. 12(b)).

4.7.6 Built-up Curb Ramps. Built-up curb ramps shall be located so that they do not project into vehicular traffic lanes (see Fig. 13).

4.7.7 *Detectable Warnings.* A curb ramp shall have a *detectable* warning complying with 4.29.2. *The detectable warning shall extend* the full width and depth of the curb ramp.

4.7.8 Obstructions. Curb ramps shall be located or protected to prevent their obstruction by parked vehicles.

4.7.9 Location at Marked Crossings. Curb ramps at marked crossings shall be wholly contained within the markings, excluding any flared sides (see Fig. 15).

4.7.10 Diagonal Curb Ramps. If diagonal (or corner type) curb ramps have returned curbs or other well-defined edges, such edges shall be parallel to the direction of pedestrian flow. The bottom of diagonal curb ramps shall have 48 in (1220 mm) minimum clear space as shown in Fig. 15(c) and (d). If diagonal curb ramps are provided at marked crossings, the 48 in (1220 mm) clear space shall be within the markings (see Fig. 15(c) and (d)). If diagonal curb ramps have flared sides, they shall also have at least a 24 in (610 mm) long segment of straight curb located on each side of the curb ramp and within the marked crossing (see Fig. 15(c)).

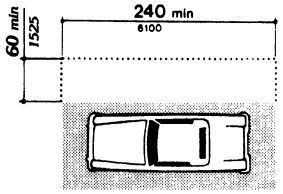

Fig. 10
Access Aisle at Passenger Loading Zones

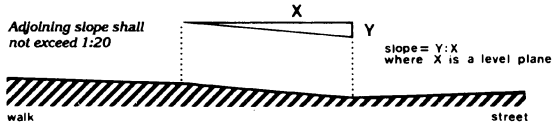

Fig. 11
Measurement of Curb Ramp Slopes

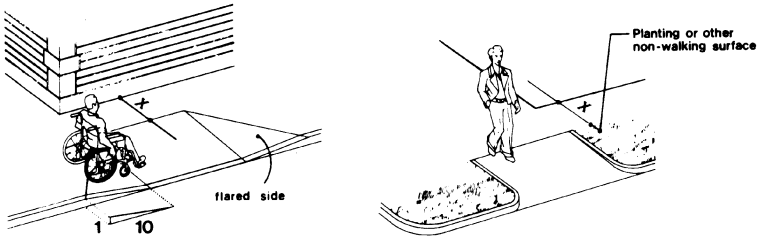

(a)
Flared Sides

(b)
Returned Curb

If X is less than 48 in, then the slope of the flared side shall not exceed 1:12.

Fig. 12
Sides of Curb Ramps

4.7.11 Islands. Any raised islands in crossings shall be cut through level with the street or have curb ramps at both sides and a level area at least 48 in (1220 mm) long between the curb ramps in the part of the island intersected by the crossings (see Fig. 15(a) and (b)).

4.8 Ramps.

4.8.1* General. Any part of an accessible route with a slope greater than 1:20 shall be considered a ramp and shall comply with 4.8.

4.8.2* Slope and Rise. The least possible slope shall be used for any ramp. The maximum slope of a ramp in new construction shall be 1:12. The maximum rise for any run shall be 30 in (760 mm) (see Fig. 16). Curb ramps and ramps to be constructed on existing sites or in existing buildings or facilities may have slopes and rises as *allowed in 4.1.6(3)(a)* if space limitations prohibit the use of a 1:12 slope or less.

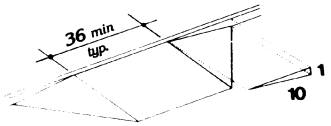

Fig. 13
Built-Up Curb Ramp

4.8 Ramps

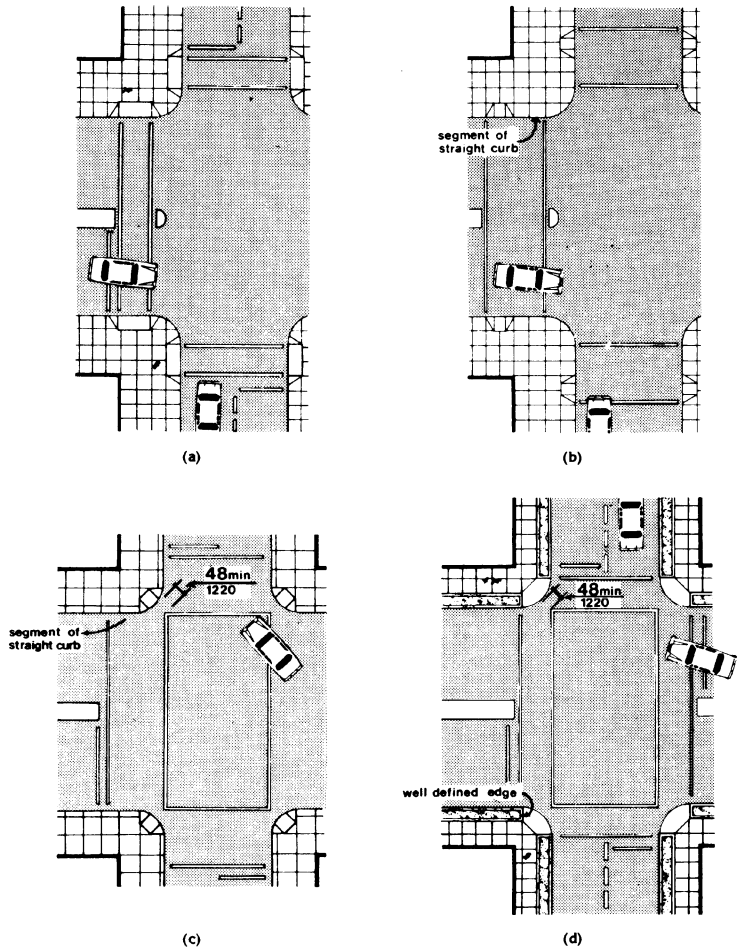

Fig. 15
Curb Ramps at Marked Crossings

28

4.8 Ramps

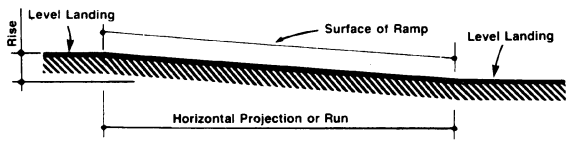

	Maximum Rise		Maximum Horizontal Projection	
Slope	in	mm	ft	m
1:12 to < 1:16	30	760	30	9
1:16 to < 1:20	30	760	40	12

Fig. 16
Components of a Single Ramp Run and Sample Ramp Dimensions

4.8.3 Clear Width. The minimum clear width of a ramp shall be 36 in (915 mm).

4.8.4* Landings. Ramps shall have level landings at bottom and top of *each ramp and* each *ramp* run. Landings shall have the following features:

(1) The landing shall be at least as wide as the ramp run leading to it.

(2) The landing length shall be a minimum of 60 in (1525 mm) clear.

(3) If ramps change direction at landings, the minimum landing size shall be 60 in by 60 in (1525 mm by 1525 mm).

(4) If a doorway is located at a landing, then the area in front of the doorway shall comply with 4.13.6.

4.8.5* Handrails. If a ramp run has a rise greater than 6 in (150 mm) or a horizontal projection greater than 72 in (1830 mm), then it shall have handrails on both sides. Handrails are not required on curb ramps *or adjacent to seating in assembly areas*. Handrails shall comply with 4.26 and shall have the following features:

(1) Handrails shall be provided along both sides of ramp segments. The inside handrail on switchback or dogleg ramps shall always be continuous.

(2) If handrails are not continuous, they shall extend at least 12 in (305 mm) beyond the top and bottom of the ramp segment and shall be parallel with the floor or ground surface (see Fig. 17).

(3) The clear space between the handrail and the wall shall be 1 - 1/2 in (38 mm).

(4) Gripping surfaces shall be continuous.

(5) Top of handrail gripping surfaces shall be mounted between 34 in and 38 in (865 mm and 965 mm) above ramp surfaces.

(6) Ends of handrails shall be either rounded or returned smoothly to floor, wall, or post.

(7) Handrails shall not rotate within their fittings.

4.8.6 Cross Slope and Surfaces. The cross slope of ramp surfaces shall be no greater than 1:50. Ramp surfaces shall comply with 4.5.

4.8.7 Edge Protection. Ramps and landings with drop-offs shall have curbs, walls, railings, or projecting surfaces that prevent people from slipping off the ramp. Curbs shall be a minimum of 2 in (50 mm) high (see Fig. 17).

4.8.8 Outdoor Conditions. Outdoor ramps and their approaches shall be designed so that water will not accumulate on walking surfaces.

4.9 Stairs.

4.9.1* Minimum Number. *Stairs required to be accessible by 4.1 shall comply with 4.9.*

4.9.2 Treads and Risers. On any given flight of stairs, all steps shall have uniform riser heights and uniform tread widths. Stair treads shall be no less than 11 in (280 mm) wide, measured from riser to riser (see Fig. 18(a)). *Open risers are not permitted.*

4.9.3 Nosings. The undersides of nosings shall not be abrupt. The radius of curvature at the leading edge of the tread shall be no greater than 1/2 in (13 mm). Risers shall be sloped or the underside of the nosing shall have an angle not less than 60 degrees from the horizontal. Nosings shall project no more than 1-1/2 in (38 mm) (see Fig. 18).

4.9.4 Handrails. Stairways shall have handrails at both sides of all stairs. Handrails shall comply with 4.26 and shall have the following features:

(1) Handrails shall be continuous along both sides of stairs. The inside handrail on switchback or dogleg stairs shall always be continuous (see Fig. 19(a) and (b)).

(2) If handrails are not continuous, they shall extend at least 12 in (305 mm) beyond the top riser and at least 12 in (305 mm) plus the width of one tread beyond the bottom riser. At the top, the extension shall be parallel with the floor or ground surface. At the bottom, the handrail shall continue to slope for a distance of the width of one tread from the bottom riser; the remainder of the extension shall be horizontal (see Fig. 19(c) and (d)). Handrail extensions shall comply with 4.4.

(3) The clear space between handrails and wall shall be 1-1/2 in (38 mm).

(4) Gripping surfaces shall be uninterrupted by newel posts, other construction elements, or obstructions.

(5) Top of handrail gripping surface shall be mounted between 34 in and 38 in (865 mm and 965 mm) above stair nosings.

(6) Ends of handrails shall be either rounded or returned smoothly to floor, wall or post.

(7) Handrails shall not rotate within their fittings.

4.9.5 *Detectable* Warnings at Stairs. *(Reserved).*

4.9.6 Outdoor Conditions. Outdoor stairs and their approaches shall be designed so that water will not accumulate on walking surfaces.

4.10 Elevators.

4.10.1 General. *Accessible* elevators shall be on an accessible route and shall comply with 4.10 and with the *ASME A17.1-1990*, Safety Code for Elevators and Escalators. *Freight elevators shall not be considered as meeting the requirements of this section unless the only elevators provided are used as combination passenger and freight elevators for the public and employees.*

4.10.2 Automatic Operation. Elevator operation shall be automatic. Each car shall be equipped with a self-leveling feature that will automatically bring the car to floor landings within a tolerance of 1/2 in (13 mm) under rated loading to zero loading conditions. This self-leveling feature shall be automatic and independent of the operating device and shall correct the overtravel or undertravel.

4.10.3 Hall Call Buttons. Call buttons in elevator lobbies and halls shall be centered at 42 in (1065 mm) above the floor. Such call buttons shall have visual signals to indicate when each call is registered and when each call is answered. Call buttons shall be a minimum of 3/4 in (19 mm) in the smallest dimension. The button designating the up direction shall be on top. (See Fig. 20.) *Buttons shall be raised or flush. Objects mounted beneath hall call buttons shall not project into the elevator lobby more than 4 in (100 mm).*

4.10 Elevators

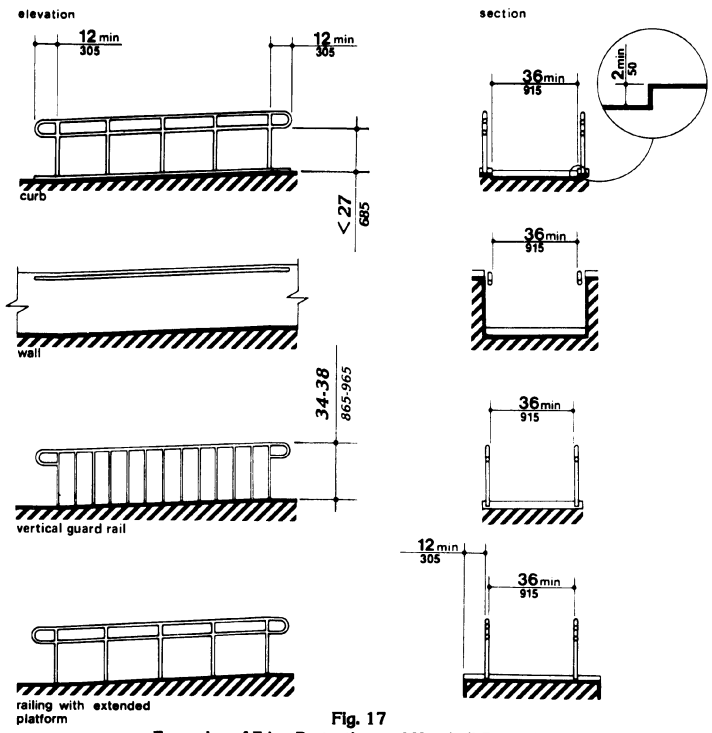

Fig. 17
Examples of Edge Protection and Handrail Extensions

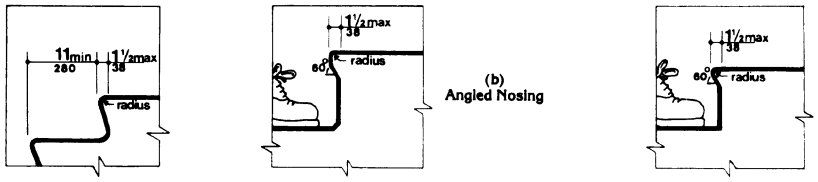

(a)
Flush Riser

(b)
Angled Nosing

(c)
Rounded Nosing

Fig. 18
Usable Tread Width and Examples of Acceptable Nosings

31

4.10 Elevators

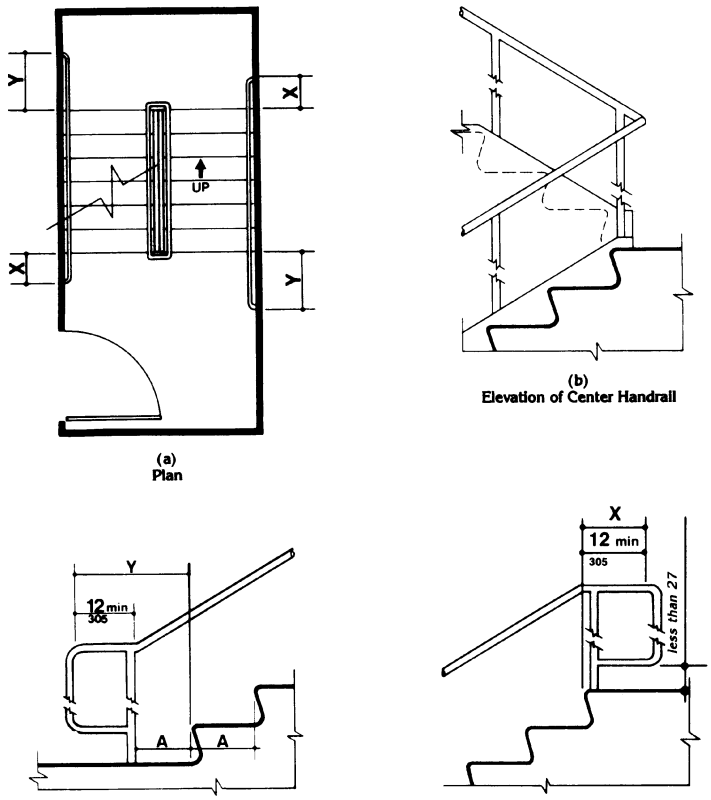

NOTE:

X is the 12 in minimum handrail extension required at each top riser.

Y is the minimum handrail extension of 12 in plus the width of one tread that is required at each bottom riser.

Fig. 19
Stair Handrails

4.10 Elevators

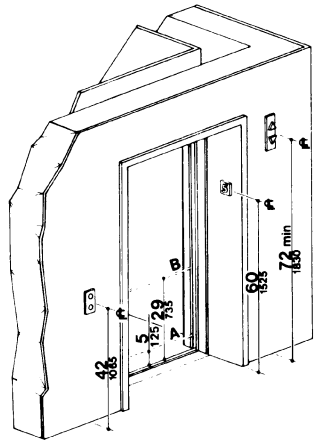

NOTE: The automatic door reopening device is activated if an object passes through either line A or line B. Line A and line B represent the vertical locations of the door reopening device not requiring contact.

Fig. 20
Hoistway and Elevator Entrances

4.10.4 Hall Lanterns. A visible and audible signal shall be provided at each hoistway entrance to indicate which car is answering a call. Audible signals shall sound once for the up direction and twice for the down direction or shall have verbal annunciators that say "up" or "down." Visible signals shall have the following features:

(1) Hall lantern fixtures shall be mounted so that their centerline is at least 72 in (1830 mm) above the lobby floor. (See Fig. 20.)

(2) Visual elements shall be at least 2-1/2 in (64 mm) in the smallest dimension.

(3) Signals shall be visible from the vicinity of the hall call button (see Fig. 20). In-car lanterns located in cars, visible from the vicinity of hall call buttons, and conforming to the above requirements, shall be acceptable.

4.10.5 *Raised and Braille* Characters on Hoistway Entrances. All elevator hoistway entrances shall have *raised and Braille* floor designations provided on both jambs. The centerline of the characters shall be 60 in (1525 mm) *above finish* floor. Such characters shall be 2 in (50 mm) high and shall comply with 4.30.4. Permanently applied plates are acceptable if they are permanently fixed to the jambs. (See Fig. 20).

4.10.6* Door Protective and Reopening Device. Elevator doors shall open and close automatically. They shall be provided with a reopening device that will stop and reopen a car door and hoistway door automatically if the door becomes obstructed by an object or person. The device shall be capable of completing these operations without requiring contact for an obstruction passing through the opening at heights of 5 in and 29 in (125 mm and 735 mm) above finish floor (see Fig. 20). Door reopening devices shall remain effective for at least 20 seconds. After such an interval, doors may close in accordance with the requirements of *ASME A17.1-1990.*

4.10.7* Door and Signal Timing for Hall Calls. The minimum acceptable time from notification that a car is answering a call until the doors of that car start to close shall be calculated from the following equation:

$$T = D/(1.5\ ft/s) \text{ or } T = D/(445\ mm/s)$$

where T total time in seconds and D distance (in feet or millimeters) from a point in the lobby or corridor 60 in (1525 mm) directly in front of the farthest call button controlling that car to the centerline of its hoistway door (see Fig. 21). For cars with in-car lanterns, T begins when the lantern is visible from the vicinity of hall call buttons and an audible signal is sounded. *The minimum acceptable notification time shall be 5 seconds.*

4.10.8 Door Delay for Car Calls. The minimum time for elevator doors to remain fully open in response to a car call shall be 3 seconds.

4.10.9 Floor Plan of Elevator Cars. The floor area of elevator cars shall provide space for wheelchair users to enter the car, maneuver

4.10.12 Car Controls

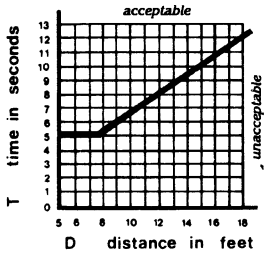

Fig. 21
Graph of Timing Equation

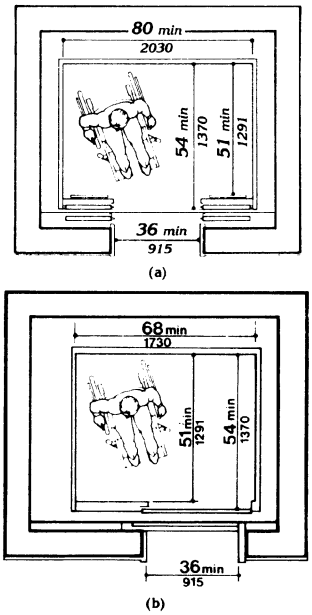

Fig. 22
Minimum Dimensions of Elevator Cars

within reach of controls, and exit from the car. Acceptable door opening and inside dimensions shall be as shown in Fig. 22. The clearance between the car platform sill and the edge of any hoistway landing shall be no greater than 1-1/4 in (32 mm).

4.10.10 Floor Surfaces. Floor surfaces shall comply with 4.5.

4.10.11 Illumination Levels. The level of illumination at the car controls, platform, and car threshold and landing sill shall be at least 5 footcandles (53.8 lux).

4.10.12* Car Controls. Elevator control panels shall have the following features:

(1) Buttons. All control buttons shall be at least 3/4 in (19 mm) in their smallest dimension. They *shall* be *raised* or flush.

(2) Tactile, *Braille*, and Visual Control Indicators. All control buttons shall be designated by *Braille and by raised* standard alphabet characters for letters, arabic characters for numerals, or standard symbols as shown in Fig. 23(a), and as required in *ASME A17.1-1990. Raised and Braille* characters and symbols shall comply with 4.30. The call button for the main entry floor shall be designated by a *raised* star at the left of the floor designation (see Fig. 23(a)). All raised designations for control buttons shall be placed immediately to the left of the button to which they apply. Applied plates, permanently attached, are an acceptable means to provide raised control designations. Floor buttons shall be provided with visual indicators to show when each call is registered. The visual indicators shall be extinguished when each call is answered.

(3) Height. All floor buttons shall be no higher than 54 in (1370 mm) above the *finish* floor *for side approach and 48 in (1220 mm) for front approach.* Emergency controls, including the emergency alarm and emergency stop, shall be grouped at the bottom of the panel and shall have their centerlines no less than 35 in (890 mm) above the finish floor (see Fig. 23(a) and (b)).

4.10.13* Car Position Indicators

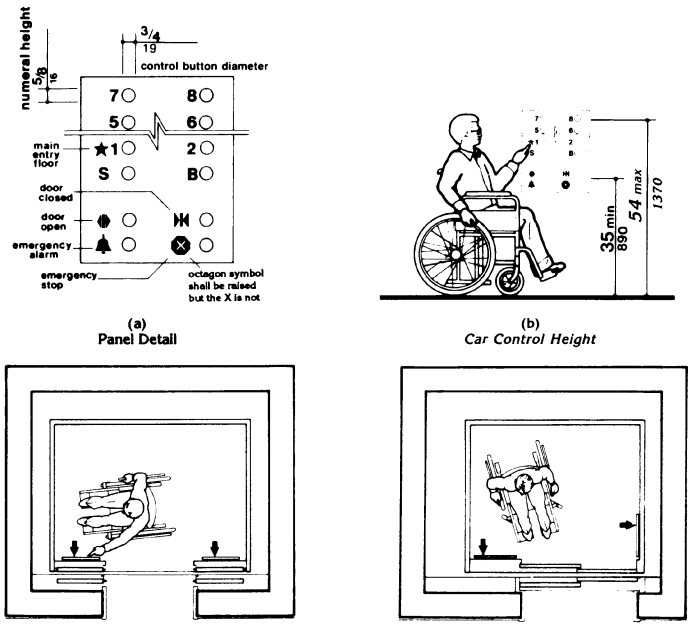

(a)
Panel Detail

(b)
Car Control Height

(c)
Alternate Locations of Panel with Center Opening Door

(d)
Alternate Locations of Panel with Side Opening Door

Fig. 23
Car Controls

(4) Location. Controls shall be located on a front wall if cars have center opening doors, and at the side wall or at the front wall next to the door if cars have side opening doors (see Fig. 23(c) and (d)).

4.10.13* Car Position Indicators. In elevator cars, a visual car position indicator shall be provided above the car control panel or over the door to show the position of the elevator in the hoistway. As the car passes or stops at a floor served by the elevators, the corresponding numerals shall illuminate, and an audible signal shall sound. Numerals shall be a minimum of 1/2 in (13 mm) high. The audible signal shall be no less than 20 decibels with a frequency no higher than 1500 Hz. An automatic verbal announcement of the floor number at which a car stops or which a car passes may be substituted for the audible signal.

4.10.14* Emergency Communications. If provided, emergency two-way communication systems between the elevator and a point outside the hoistway shall comply with *ASME*

4.11 Platform Lifts *(Wheelchair Lifts)*

A17.1-1990. The highest operable part of a two-way communication system shall be a maximum of *48 in (1220 mm)* from the floor of the car. It shall be identified by a raised symbol and lettering complying with 4.30 and located adjacent to the device. If the system uses a handset then the length of the cord from the panel to the handset shall be at least 29 in (735 mm). *If the system is located in a closed compartment the compartment door hardware shall conform to 4.27, Controls and Operating Mechanisms. The emergency intercommunication system shall not require voice communication.*

4.11 Platform Lifts *(Wheelchair Lifts).*

4.11.1 Location. *Platform lifts (wheelchair lifts) permitted by 4.1 shall comply with the requirements of 4.11.*

4.11.2* Other Requirements. If platform lifts *(wheelchair lifts)* are used, they shall comply with 4.2.4, 4.5, 4.27, and *ASME A17.1 Safety Code for Elevators and Escalators, Section XX, 1990.*

4.11.3 Entrance. *If platform lifts are used then they shall facilitate unassisted entry, operation, and exit from the lift in compliance with 4.11.2.*

4.12 Windows.

4.12.1* General. *(Reserved).*

4.12.2* Window Hardware. *(Reserved).*

4.13 Doors.

4.13.1 General. *Doors required to be accessible by 4.1* shall comply with the requirements of 4.13.

4.13.2 Revolving Doors and Turnstiles. Revolving doors or turnstiles shall not be the only means of passage at an accessible entrance or along an accessible route. *An accessible gate or door shall be provided adjacent to the turnstile or revolving door and shall be so designed as to facilitate the same use pattern.*

4.13.3 Gates. Gates, including ticket gates, shall meet all applicable specifications of 4.13.

4.13.4 Double-Leaf Doorways. If doorways have two *independently operated* door leaves, then at least one leaf shall meet the specifications in 4.13.5 and 4.13.6. That leaf shall be an active leaf.

4.13.5 Clear Width. Doorways shall have a minimum clear opening of 32 in (815 mm) with the door open 90 degrees, measured between the face of the door and the *opposite* stop (see Fig. 24(a), (b), (c), and (d)). Openings more than 24 in (610 mm) in depth shall comply with 4.2.1 and 4.3.3 (see Fig. 24(e)).

EXCEPTION: Doors not requiring full user passage, such as shallow closets, may have the clear opening reduced to 20 in (510 mm) minimum.

4.13.6 Maneuvering Clearances at Doors. Minimum maneuvering clearances at doors that are not automatic or power-assisted shall be as shown in Fig. 25. The floor or ground area within the required clearances shall be level and clear.

EXCEPTION: Entry doors to acute care hospital bedrooms for in-patients shall be exempted from the requirement for space at the latch side of the door (see dimension "x" in Fig. 25) if the door is at least 44 in (1120 mm) wide.

4.13.7 Two Doors in Series. The minimum space between two hinged or pivoted doors in series shall be 48 in (1220 mm) plus the width of any door swinging into the space. Doors in series shall swing either in the same direction or away from the space between the doors (see Fig. 26).

4.13.8* Thresholds at Doorways. Thresholds at doorways shall not exceed 3/4 in (19 mm) in height for exterior sliding doors or 1/2 in (13 mm) for other types of doors. Raised thresholds and floor level changes at accessible doorways shall be beveled with a slope no greater than 1:2 (see 4.5.2).

4.13.9* Door Hardware. Handles, pulls, latches, locks, and other operating devices on accessible doors shall have a shape that is easy

4.13 Doors

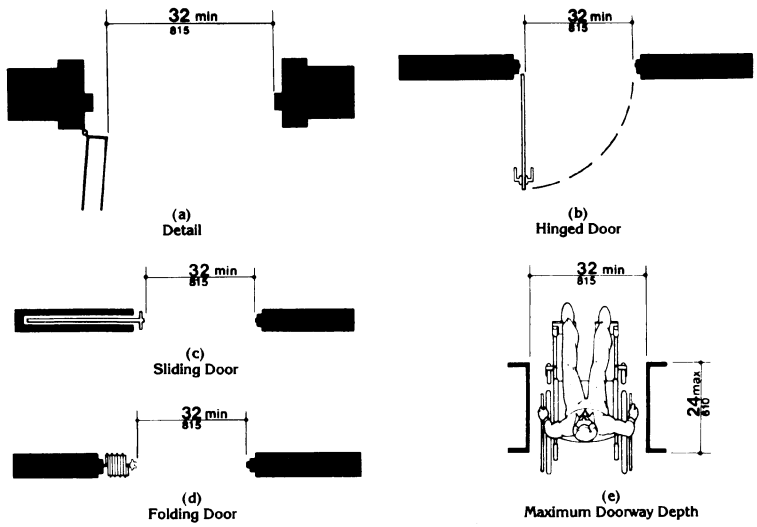

Fig. 24
Clear Doorway Width and Depth

to grasp with one hand and does not require tight grasping, tight pinching, or twisting of the wrist to operate. Lever-operated mechanisms, push-type mechanisms, and U-shaped handles are acceptable designs. When sliding doors are fully open, operating hardware shall be exposed and usable from both sides. *Hardware required for accessible door passage shall be mounted no higher than 48 in (1220 mm) above finished floor.*

4.13.10* Door Closers. If a door has a closer, then the sweep period of the closer shall be adjusted so that from an open position of 70 degrees, the door will take at least 3 seconds to move to a point 3 in (75 mm) from the latch, measured to the leading edge of the door.

4.13.11* Door Opening Force. The maximum force for pushing or pulling open a door shall be as follows:

(1) Fire doors shall have the minimum opening force allowable by the appropriate administrative authority.

(2) Other doors.

(a) exterior hinged doors: *(Reserved).*

(b) interior hinged doors: 5 lbf (22.2N)

(c) sliding or folding doors: 5 lbf (22.2N)

These forces do not apply to the force required to retract latch bolts or disengage other devices that may hold the door in a closed position.

4.13 Doors

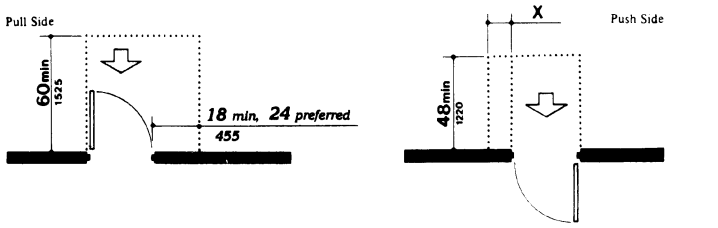

NOTE: x = 12 in (305 mm) if door has both a closer and latch.

(a)
Front Approaches — Swinging Doors

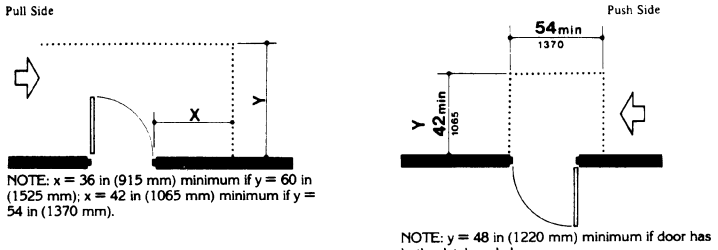

NOTE: x = 36 in (915 mm) minimum if y = 60 in (1525 mm); x = 42 in (1065 mm) minimum if y = 54 in (1370 mm).

NOTE: y = 48 in (1220 mm) minimum if door has both a latch and closer.

(b)
Hinge Side Approaches — Swinging Doors

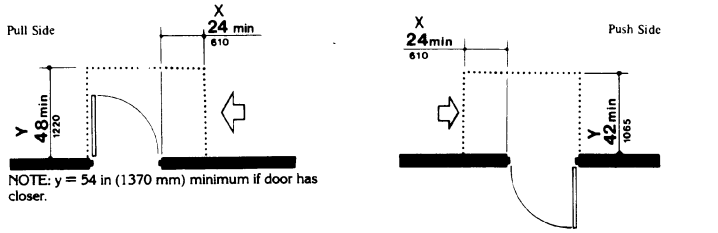

NOTE: y = 54 in (1370 mm) minimum if door has closer.

NOTE: y = 48 in (1220 mm) minimum if door has closer.

(c)
Latch Side Approaches — Swinging Doors

NOTE: All doors in alcoves shall comply with the clearances for front approaches.

Fig. 25
Maneuvering Clearances at Doors

4.13 Doors

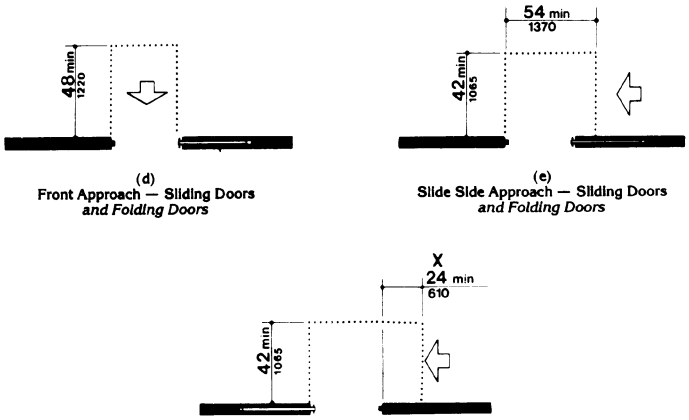

(d)
Front Approach — Sliding Doors *and Folding Doors*

(e)
Slide Side Approach — Sliding Doors *and Folding Doors*

(f)
Latch Side Approach — Sliding Doors *and Folding Doors*

NOTE: All doors in alcoves shall comply with the clearances for front approaches.

Fig. 25
Maneuvering Clearances at Doors *(Continued)*

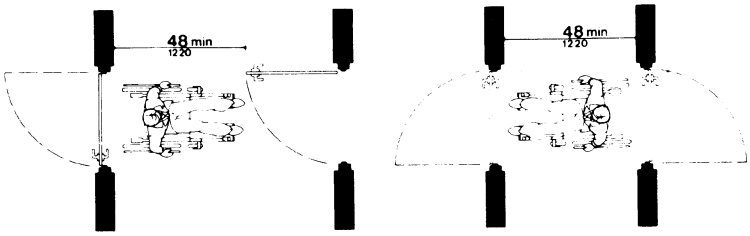

Fig. 26
Two Hinged Doors in Series

4.13.12* Automatic Doors and Power-Assisted Doors. If an automatic door is used, then it shall comply with *ANSI/BHMA A156.10-1985*. Slowly opening, low-powered, automatic doors shall *comply with ANSI A156.19-1984*. Such doors shall not open to back check faster than 3 seconds and shall require no more than 15 lbf (66.6N) to stop door movement. If a power-assisted door is used, its door-opening force shall comply with 4.13.11 and its closing shall conform to the requirements in *ANSI A156.19-1984*.

4.14 Entrances.

4.14.1 Minimum Number. *Entrances required to be accessible by 4.1* shall be part of an accessible route complying with 4.3. Such entrances shall be connected by an accessible route to public transportation stops, to accessible parking and passenger loading zones, and to public streets or sidewalks if available (see 4.3.2(1)). They shall also be connected by an accessible route to all accessible spaces or elements within the building or facility.

4.14.2 Service Entrances. A service entrance shall not be the sole accessible entrance unless it is the only entrance to a building or facility (for example, in a factory or garage).

4.15 Drinking Fountains and Water Coolers.

4.15.1 Minimum Number. *Drinking fountains or water coolers required to be accessible by 4.1* shall comply with 4.15.

4.15.2* Spout Height. Spouts shall be no higher than 36 in (915 mm), measured from the floor or ground surfaces to the spout outlet (see Fig. 27(a)).

4.15.3 Spout Location. The spouts of drinking fountains and water coolers shall be at the front of the unit and shall direct the water flow in a trajectory that is parallel or nearly parallel to the front of the unit. The spout shall provide a flow of water at least 4 in (100 mm) high so as to allow the insertion of a cup or glass under the flow of water. *On an accessible drinking fountain with a round or oval bowl, the spout must be positioned so the flow of water is within 3 in (75 mm) of the front edge of the fountain.*

4.15.4 Controls. Controls shall comply with 4.27.4. *Unit controls shall be front mounted or side mounted near the front edge.*

4.15.5 Clearances.

(1) Wall- and post-mounted cantilevered units shall have a clear knee space between the bottom of the apron and the floor or ground at least 27 in (685 mm) high, 30 in (760 mm) wide, and 17 in to 19 in (430 mm to 485 mm) deep (see Fig. 27(a) and (b)). Such units shall also have a minimum clear floor space 30 in by 48 in (760 mm by 1220 mm) to allow a person in a wheelchair to approach the unit facing forward.

(2) Free-standing or built-in units not having a clear space under them shall have a clear floor space at least 30 in by 48 in (760 mm by 1220 mm) that allows a person in a wheelchair to make a parallel approach to the unit (see Fig. 27(c) and (d)). This clear floor space shall comply with 4.2.4.

4.16 Water Closets.

4.16.1 General. Accessible water closets shall comply with 4.16.

4.16.2 Clear Floor Space. Clear floor space for water closets not in stalls shall comply with Fig. 28. Clear floor space may be arranged to allow either a left-handed or right-handed approach.

4.16.3* Height. The height of water closets shall be 17 in to 19 in (430 mm to 485 mm), measured to the top of the toilet seat (see Fig. 29(b)). *Seats shall not be sprung to return to a lifted position.*

4.16.4* Grab Bars. Grab bars for water closets not located in stalls shall comply with 4.26 and Fig. 29. *The grab bar behind the water closet shall be 36 in (915 mm) minimum.*

4.16.5* Flush Controls. Flush controls shall be hand operated *or automatic* and shall comply with 4.27.4. Controls for flush valves

shall be mounted on the wide side of toilet areas no more than 44 in (1120 mm) above the floor.

4.16.6 Dispensers. Toilet paper dispensers shall be installed within reach, as shown in Fig. 29(b). *Dispensers that control delivery, or that do not permit continuous paper flow, shall not be used.*

4.17 Toilet Stalls.

4.17.1 Location. Accessible toilet stalls shall be on an accessible route and shall meet the requirements of 4.17.

4.17.2 Water Closets. Water closets in accessible stalls shall comply with 4.16.

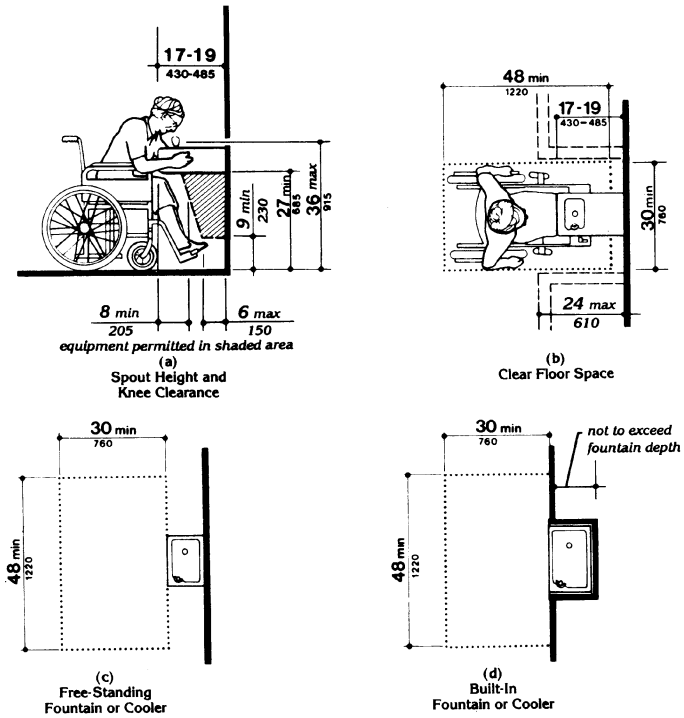

Fig. 27
Drinking Fountains and Water Coolers

4.17 Toilet Stalls

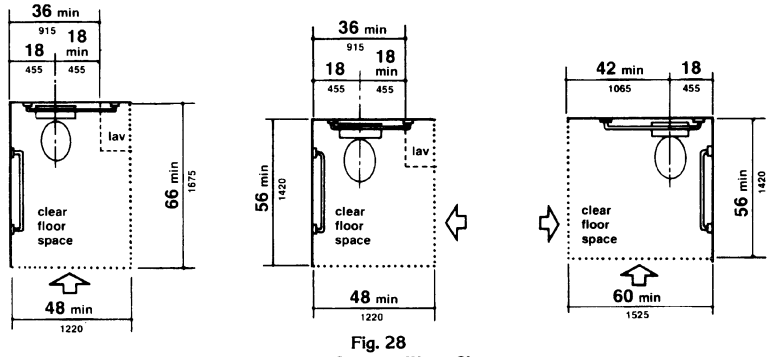

Fig. 28
Clear Floor Space at Water Closets

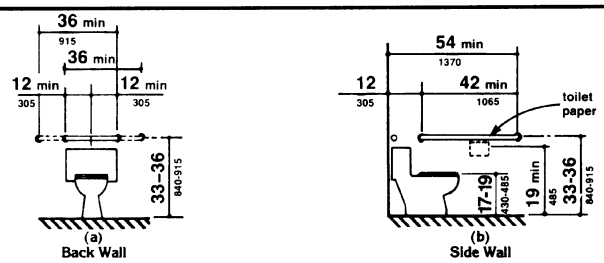

Fig. 29
Grab Bars at Water Closets

4.17.3* Size and Arrangement. The size and arrangement of the standard toilet stall shall comply with Fig. 30(a), *Standard Stall.* Standard toilet stalls with a minimum depth of 56 in (1420 mm) (see Fig. 30(a)) shall have wall-mounted water closets. If the depth of a standard toilet stall is increased at least 3 in (75 mm), then a floor-mounted water closet may be used. Arrangements shown for standard toilet stalls may be reversed to allow either a left- or right-hand approach. Additional stalls shall be provided in conformance with 4.22.4.

EXCEPTION: In instances of alteration work where provision of a standard stall (Fig. 30(a)) is technically infeasible or where plumbing code requirements prevent combining existing stalls to provide space, either alternate stall (Fig. 30(b)) may be provided in lieu of the standard stall.

4.17.4 Toe Clearances. In standard stalls, the front partition and at least one side partition shall provide a toe clearance of at least 9 in (230 mm) above the floor. If the depth of the stall is greater than 60 in (1525 mm), then the toe clearance is not required.

4.17.5* Doors. Toilet stall doors, *including door hardware,* shall comply with 4.13. *If toilet stall approach is from the latch side of the stall door, clearance between the door side of the*

4.17 Toilet Stalls

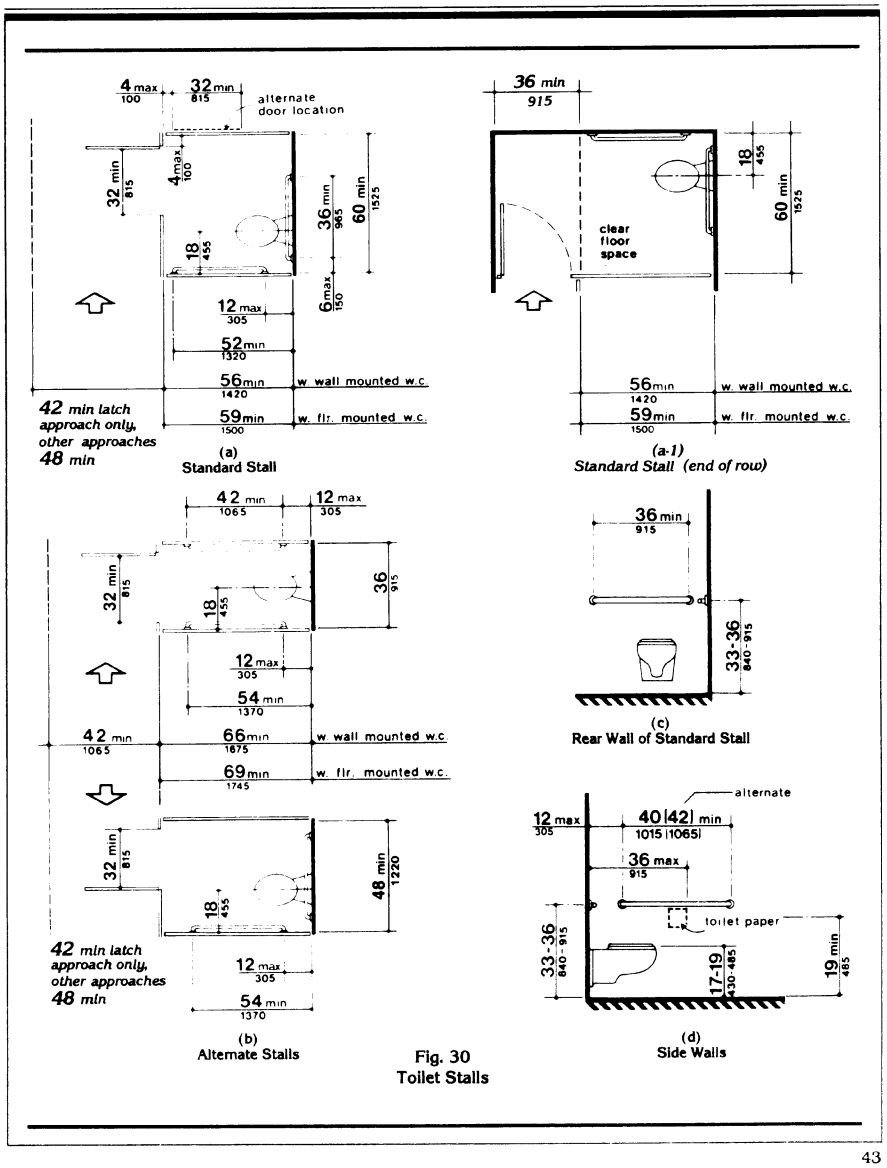

Fig. 30
Toilet Stalls

43

4.19 Lavatories and Mirrors

stall and any obstruction may be reduced to a minimum of 42 in (1065 mm) (Fig. 30).

4.17.6 Grab Bars. Grab bars complying with the length and positioning shown in Fig. 30(a), (b), (c), and (d) shall be provided. Grab bars may be mounted with any desired method as long as they have a gripping surface at the locations shown and do not obstruct the required clear floor area. Grab bars shall comply with 4.26.

4.18 Urinals.

4.18.1 General. Accessible urinals shall comply with 4.18.

4.18.2 Height. Urinals shall be stall-type or wall-hung with an elongated rim at a maximum of 17 in (430 mm) above the finish floor.

4.18.3 Clear Floor Space. A clear floor space 30 in by 48 in (760 mm by 1220 mm) shall be provided in front of urinals to allow forward approach. This clear space shall adjoin or overlap an accessible route and shall comply with 4.2.4. *Urinal shields that do not extend beyond the front edge of the urinal rim may be provided with 29 in (735 mm) clearance between them.*

4.18.4 Flush Controls. Flush controls shall be hand operated or automatic, and shall comply with 4.27.4, and shall be mounted no more than 44 in (1120 mm) above the finish floor.

4.19 Lavatories and Mirrors.

4.19.1 General. The requirements of 4.19 shall apply to lavatory fixtures, vanities, and built-in lavatories.

4.19.2 Height and Clearances. Lavatories shall be mounted with *the rim or counter surface no higher than 34 in (865 mm) above the finish floor.* Provide a clearance of at least 29 in (735 mm) above the finish floor to the bottom of the apron. Knee and toe clearance shall comply with Fig. 31.

4.19.3 Clear Floor Space. A clear floor space 30 in by 48 in (760 mm by 1220 mm) complying with 4.2.4 shall be provided in front of a lavatory to allow forward approach. Such clear floor space shall adjoin or overlap an accessible route and shall extend a maximum of 19 in (485 mm) underneath the lavatory (see Fig. 32).

4.19.4 Exposed Pipes and Surfaces. Hot water and drain pipes under lavatories shall be insulated or otherwise *configured to protect against contact.* There shall be no sharp or abrasive surfaces under lavatories.

4.19.5 Faucets. Faucets shall comply with 4.27.4. Lever-operated, push-type, and electronically controlled mechanisms are examples of acceptable designs. *If* self-closing valves are

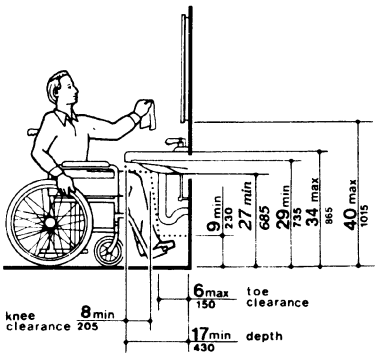

Fig. 31
Lavatory Clearances

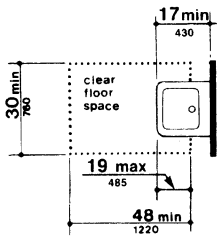

Fig. 32
Clear Floor Space at Lavatories

used the faucet *shall remain* open for at least 10 seconds.

4.19.6* Mirrors. Mirrors shall be mounted with the bottom edge *of the reflecting surface* no higher than 40 in (1015 mm) *above the finish* floor (see Fig. 31).

4.20 Bathtubs.

4.20.1 General. Accessible bathtubs shall comply with 4.20.

4.20.2 Floor Space. Clear floor space in front of bathtubs shall be as shown in Fig. 33.

4.20.3 Seat. An in-tub seat or a seat at the head end of the tub shall be provided as shown in Fig. 33 and 34. The structural strength of seats and their attachments shall comply with 4.26.3. Seats shall be mounted securely and shall not slip during use.

4.20.4 Grab Bars. Grab bars complying with 4.26 shall be provided as shown in Fig. 33 and 34.

4.20.5 Controls. Faucets and other controls complying with 4.27.4 shall be located as shown in Fig. 34.

4.20.6 Shower Unit. A shower spray unit with a hose at least 60 in (1525 mm) long that can be used *both* as a fixed shower head *and* as a hand-held shower shall be provided.

4.20.7 Bathtub Enclosures. If provided, enclosures for bathtubs shall not obstruct controls or transfer from wheelchairs onto bathtub seats or into tubs. Enclosures on bathtubs shall not have tracks mounted on their rims.

4.21 Shower Stalls.

4.21.1* General. Accessible shower stalls shall comply with 4.21.

4.21.2 Size and Clearances. Except as specified in 9.1.2, shower stall size and clear floor space shall comply with Fig. 35(a) or (b). The shower stall in Fig. 35(a) shall be 36 in by 36 in (915 mm by 915 mm). Shower stalls required by 9.1.2 shall comply with Fig. 57(a) or (b). The shower stall in Fig. 35(b) will fit into the space required for a bathtub.

4.21.3 Seat. A seat shall be provided in shower stalls 36 in by 36 in (915 mm by 915 mm) and shall be as shown in Fig. 36. The seat shall be mounted 17 in to 19 in (430 mm to 485 mm) from the bathroom floor and shall extend the full depth of the stall. In a 36 in by 36 in (915 mm by 915 mm) shower stall, the seat shall be on the wall opposite the controls. *Where a fixed seat is provided in a 30 in by 60 in minimum (760 mm by 1525 mm) shower stall, it shall be a folding type and shall be mounted on the wall adjacent to the controls as shown in Fig. 57.* The structural strength of seats and their attachments shall comply with 4.26.3.

4.21.4 Grab Bars. Grab bars complying with 4.26 shall be provided as shown in Fig. 37.

4.21.5 Controls. Faucets and other controls complying with 4.27.4 shall be located as shown in Fig. 37. In shower stalls 36 in by 36 in (915 mm by 915 mm), all controls, faucets, and the shower unit shall be mounted on the side wall opposite the seat.

4.21.6 Shower Unit. A shower spray unit with a hose at least 60 in (1525 mm) long that can be used *both* as a fixed shower head *and* as a hand-held shower shall be provided.

EXCEPTION: In unmonitored facilities where vandalism is a consideration, a fixed shower head mounted at 48 in (1220 mm) above the shower floor may be used in lieu of a hand-held shower head.

4.21.7 Curbs. If provided, curbs in shower stalls 36 in by 36 in (915 mm by 915 mm) shall be no higher than *1/2 in (13 mm)*. Shower stalls that are 30 in by 60 in (760 mm by 1525 mm) minimum shall not have curbs.

4.21.8 Shower Enclosures. If provided, enclosures for shower stalls shall not obstruct controls or obstruct transfer from wheelchairs onto shower seats.

4.22 Toilet Rooms.

4.22.1 Minimum Number. *Toilet facilities required to be accessible by 4.1 shall comply*

4.21 Shower Stalls

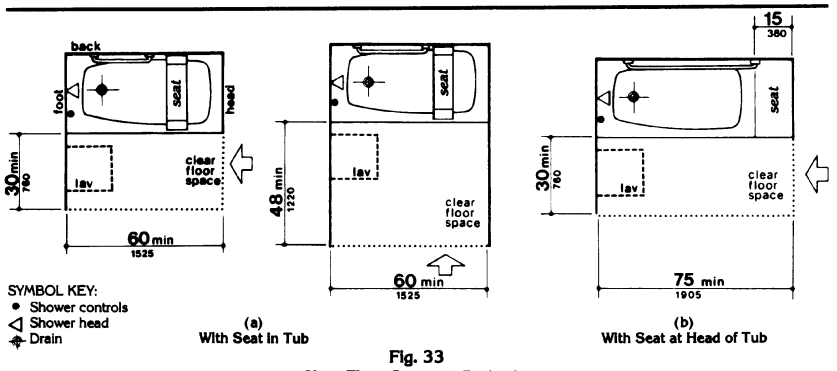

(a)
With Seat in Tub

(b)
With Seat at Head of Tub

Fig. 33
Clear Floor Space at Bathtubs

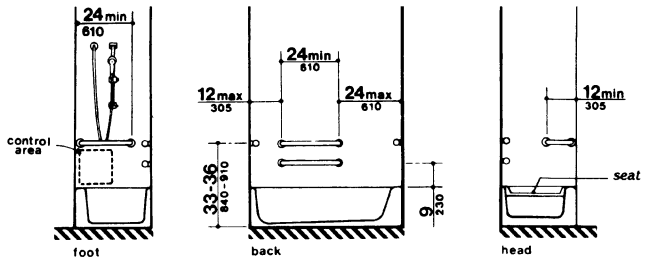

(a)
With Seat in Tub

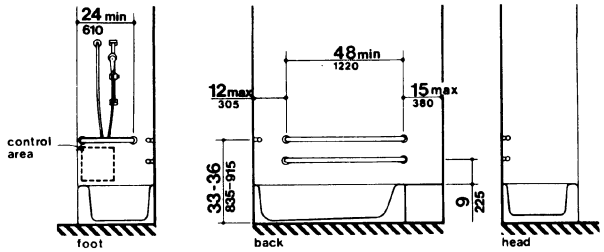

(b)
With Seat at Head of Tub

Fig. 34
Grab Bars at Bathtubs

4.22 Toilet Rooms

with 4.22. Accessible toilet rooms shall be on an accessible route.

4.22.2 Doors. All doors to accessible toilet rooms shall comply with 4.13. Doors shall not swing into the clear floor space required for any fixture.

4.22.3* Clear Floor Space. The accessible fixtures and controls required in 4.22.4, 4.22.5, 4.22.6, and 4.22.7 shall be on an accessible route. An unobstructed turning space complying with 4.2.3 shall be provided within an accessible toilet room. The clear floor space at fixtures and controls, the accessible route, and the turning space may overlap.

4.22.4 Water Closets. If toilet stalls are provided, then at least one shall be a standard toilet stall complying with 4.17; *where 6 or more stalls are provided, in addition to the stall complying with 4.17.3, at least one stall 36 in (915 mm) wide with an outward swinging, self-closing door and parallel grab bars complying with Fig. 30(d) and 4.26 shall be provided. Water closets in such stalls* shall comply with 4.16. If water closets are not in stalls, then at least one shall comply with 4.16.

4.22.5 Urinals. If urinals are provided, *then* at least one shall comply with 4.18.

4.22.6 Lavatories and Mirrors. If lavatories and mirrors are provided, *then* at least one of each shall comply with 4.19.

4.22.7 Controls and Dispensers. If controls, dispensers, receptacles, or other

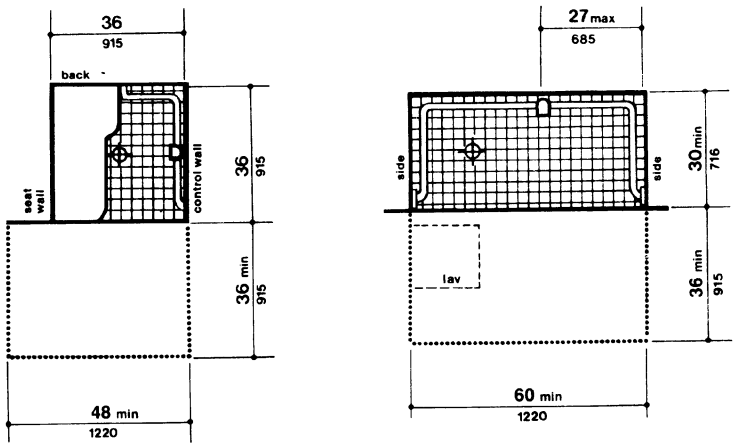

(a)
36-in by 36-in
(915-mm by 915-mm) Stall

(b)
30-in by 60-in
(760-mm by 1525-mm) Stall

Fig. 35
Shower Size and Clearances

4.23 Bathrooms, Bathing Facilities, and Shower Rooms

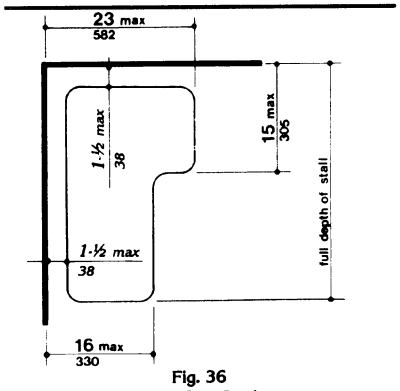

Fig. 36
Shower Seat Design

equipment are provided, *then* at least one of each shall be on an accessible route and shall comply with 4.27.

4.23 Bathrooms, Bathing Facilities, and Shower Rooms.

4.23.1 Minimum Number. Bathrooms, bathing facilities, or shower rooms *required to be accessible by 4.1* shall comply with 4.23 and shall be on an accessible route.

4.23.2 Doors. Doors to accessible bathrooms shall comply with 4.13. Doors shall not swing into the floor space required for any fixture.

4.23.3* Clear Floor Space. The accessible fixtures and controls required in 4.23.4, 4.23.5, 4.23.6, 4.23.7, 4.23.8, and 4.23.9 shall be on an accessible route. An unobstructed turning

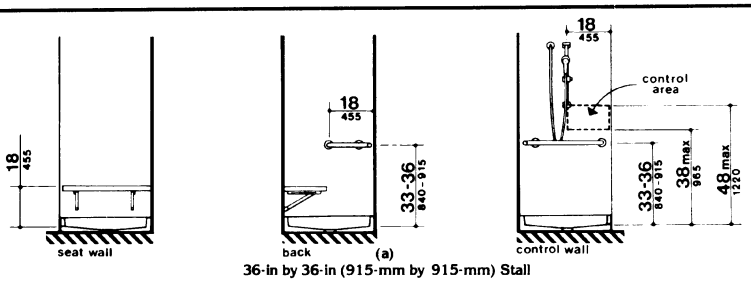

(a)
36-in by 36-in (915-mm by 915-mm) Stall

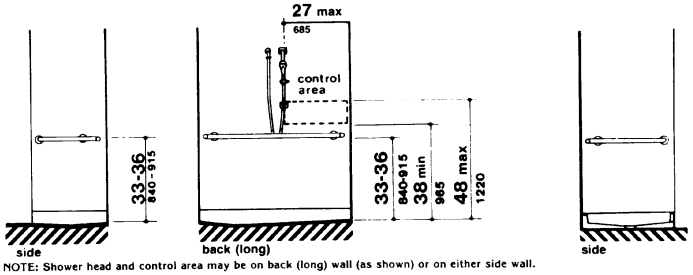

NOTE: Shower head and control area may be on back (long) wall (as shown) or on either side wall.

(b)
30-in by 60-in (760-mm by 1525-mm) Stall

Fig. 37
Grab Bars at Shower Stalls

48

space complying with 4.2.3 shall be provided within an accessible bathroom. The clear floor spaces at fixtures and controls, the accessible route, and the turning space may overlap.

4.23.4 Water Closets. If toilet stalls are provided, then at least one shall be a standard toilet stall complying with 4.17; *where 6 or more stalls are provided, in addition to the stall complying with 4.17.3, at least one stall 36 in (915 mm) wide with an outward swinging, self-closing door and parallel grab bars complying with Fig. 30(d) and 4.26 shall be provided. Water closets in such stalls* shall comply with 4.16. If water closets are not in stalls, then at least one shall comply with 4.16.

4.23.5 Urinals. If urinals are provided, then at least one shall comply with 4.18.

4.23.6 Lavatories and Mirrors. If lavatories and mirrors are provided, then at least one of each shall comply with 4.19.

4.23.7 Controls and Dispensers. If controls, dispensers, receptacles, or other equipment *are* provided, *then* at least one of each shall be on an accessible route and shall comply with 4.27.

4.23.8 Bathing and Shower Facilities. If tubs or showers are provided, then at least one accessible tub that complies with 4.20 or at least one accessible shower that complies with 4.21 shall be provided.

4.23.9* Medicine Cabinets. If medicine cabinets are provided, at least one shall be located with a usable shelf no higher than 44 in (1120 mm) above the floor space. The floor space shall comply with 4.2.4.

4.24 Sinks.

4.24.1 General. Sinks *required to be accessible by 4.1* shall comply with 4.24.

4.24.2 Height. Sinks shall be mounted with the counter or rim no higher than 34 in (865 mm) *above the finish* floor.

4.24.3 Knee Clearance. Knee clearance that is at least 27 in (685 mm) high, 30 in (760 mm) wide, and 19 in (485 mm) deep shall be provided underneath sinks.

4.24.4 Depth. Each sink shall be a maximum of 6-1/2 in (165 mm) deep.

4.24.5 Clear Floor Space. A clear floor space at least 30 in by 48 in (760 mm by 1220 mm) complying with 4.2.4 shall be provided in front of a sink to allow forward approach. The clear floor space shall be on an accessible route and shall extend a maximum of 19 in (485 mm) underneath the sink (see Fig. 32).

4.24.6 Exposed Pipes and Surfaces. Hot water and drain pipes exposed under sinks shall be insulated or otherwise *configured so as to protect against contact.* There shall be no sharp or abrasive surfaces under sinks.

4.24.7 Faucets. Faucets shall comply with 4.27.4. Lever-operated, push-type, touch-type, or electronically controlled mechanisms are acceptable designs.

4.25 Storage.

4.25.1 General. *Fixed* storage facilities such as cabinets, shelves, closets, and drawers *required to be accessible by 4.1* shall comply with 4.25.

4.25.2 Clear Floor Space. A clear floor space at least 30 in by 48 in (760 mm by 1220 mm) complying with 4.2.4 that allows either a forward or parallel approach by a person using a wheelchair shall be provided at accessible storage facilities.

4.25.3 Height. Accessible storage spaces shall be within at least one of the reach ranges specified in 4.2.5 and 4.2.6 *(see Fig. 5 and Fig. 6).* Clothes rods or shelves shall be a maximum of 54 in (1370 mm) *above the finish* floor *for a side approach. Where the distance from the wheelchair to the clothes rod or shelf exceeds 10 in (255 mm) (as in closets without accessible doors) the height and depth to the rod or shelf shall comply with Fig. 38(a) and Fig. 38(b).*

4.25.4 Hardware. Hardware for accessible storage facilities shall comply with 4.27.4. Touch latches and U-shaped pulls are acceptable.

4.26 Handrails, Grab Bars, and Tub and Shower Seats

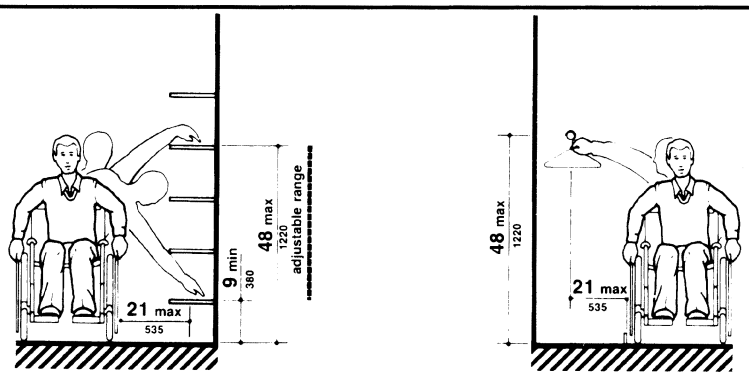

(a) Shelves (b) Closets

Fig. 38
Storage Shelves and Closets

4.26 Handrails, Grab Bars, and Tub and Shower Seats.

4.26.1* General. All handrails, grab bars, and tub and shower seats *required to be accessible by 4.1, 4.8, 4.9, 4.16, 4.17, 4.20 or 4.21* shall comply with 4.26.

4.26.2* Size and Spacing of Grab Bars and Handrails. The diameter or width of the gripping surfaces of a handrail or grab bar shall be 1-1/4 in to 1-1/2 in (32 mm to 38 mm), or the shape shall provide an equivalent gripping surface. If handrails or grab bars are mounted adjacent to a wall, the space between the wall and the grab bar shall be 1-1/2 in (38 mm) (see Fig. 39(a), (b), (c), and *(e)*). Handrails may be located in a recess if the recess is a maximum of 3 in (75 mm) deep and extends at least 18 in (455 mm) above the top of the rail (see Fig. 39(d)).

4.26.3 Structural Strength. The structural strength of grab bars, tub and shower seats, fasteners, and mounting devices shall meet the following specification:

(1) Bending stress in a grab bar or seat induced by the maximum bending moment from the application of 250 lbf (1112N) shall be less than the allowable stress for the material of the grab bar or seat.

(2) Shear stress induced in a grab bar or seat by the application of 250 lbf (1112N) shall be less than the allowable shear stress for the material of the grab bar or seat. If the connection between the grab bar or seat and its mounting bracket or other support is considered to be fully restrained, then direct and torsional shear stresses shall be totaled for the combined shear stress, which shall not exceed the allowable shear stress.

(3) Shear force induced in a fastener or mounting device from the application of 250 lbf (1112N) shall be less than the allowable lateral load of either the fastener or mounting device or the supporting structure, whichever is the smaller allowable load.

(4) Tensile force induced in a fastener by a direct tension force of 250 lbf (1112N) plus the maximum moment from the application of 250 lbf (1112N) shall be less than the allowable withdrawal load between the fastener and the supporting structure.

(5) Grab bars shall not rotate within their fittings.

4.26 Handrails, Grab Bars, and Tub and Shower Seats

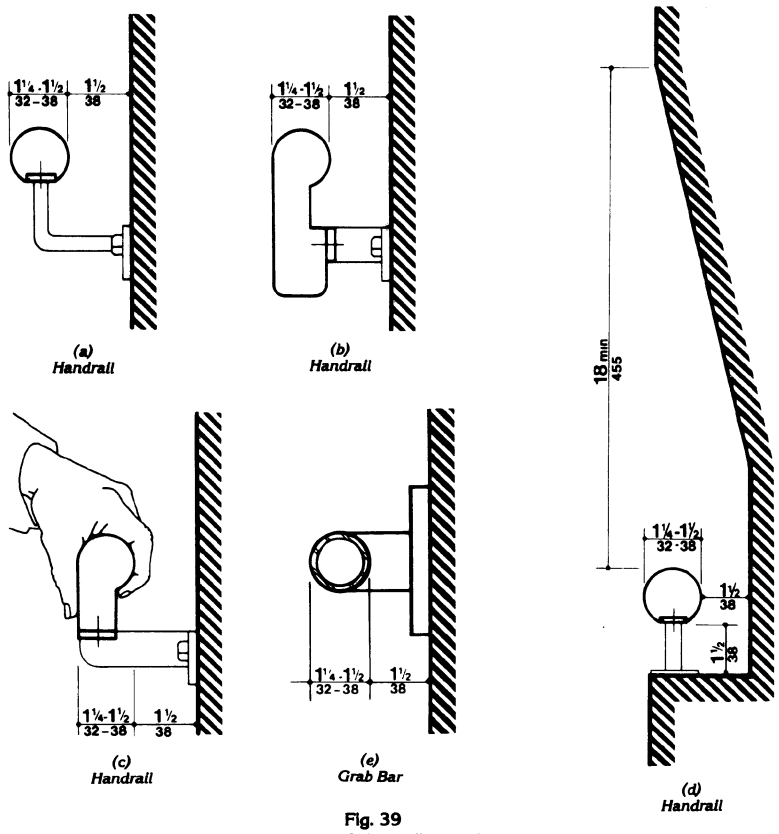

Fig. 39
Size and Spacing of Handrails and Grab Bars

4.26.4 Eliminating Hazards. A handrail or grab bar and any wall or other surface adjacent to it shall be free of any sharp or abrasive elements. Edges shall have a minimum radius of 1/8 in (3.2 mm).

4.27 Controls and Operating Mechanisms.

4.27.1 General. Controls and operating mechanisms *required to be accessible by 4.1* shall comply with 4.27.

4.28 Alarms

4.27.2 Clear Floor Space. Clear floor space complying with 4.2.4 that allows a forward or a parallel approach by a person using a wheelchair shall be provided at controls, dispensers, receptacles, and other operable equipment.

4.27.3* Height. The highest operable part of controls, dispensers, receptacles, and other operable equipment shall be placed within at least one of the reach ranges specified in 4.2.5 and 4.2.6. Electrical and communications system receptacles on walls shall be mounted no less than 15 in (380 mm) above the floor.

EXCEPTION: These requirements do not apply where the use of special equipment dictates otherwise or where electrical and communications systems receptacles are not normally intended for use by building occupants.

4.27.4 Operation. Controls and operating mechanisms shall be operable with one hand and shall not require tight grasping, pinching, or twisting of the wrist. The force required to activate controls shall be no greater than 5 lbf (22.2 N).

4.28 Alarms.

4.28.1 General. *Alarm systems required to be accessible by 4.1 shall comply with 4.28. At a minimum, visual signal appliances shall be provided in buildings and facilities in each of the following areas: restrooms and any other general usage areas (e.g., meeting rooms), hallways, lobbies, and any other area for common use.*

4.28.2* Audible Alarms. If provided, audible emergency alarms shall produce a sound that exceeds the prevailing equivalent sound level in the room or space by at least 15 *dbA* or exceeds any maximum sound level with a duration of 60 seconds by 5 *dbA*, whichever is louder. Sound levels for alarm signals shall not exceed 120 *dbA*.

4.28.3* Visual Alarms. *Visual alarm signal appliances shall be integrated into the building or facility alarm system. If single station audible alarms are provided then single station visual alarm signals shall be provided. Visual alarm signals shall have the following minimum photometric and location features:*

(1) The lamp shall be a xenon strobe type or equivalent.

(2) The color shall be clear or nominal white (i.e., unfiltered or clear filtered white light).

(3) The maximum pulse duration shall be two-tenths of one second (0.2 sec) with a maximum duty cycle of 40 percent. The pulse duration is defined as the time interval between initial and final points of 10 percent of maximum signal.

(4) The intensity shall be a minimum of 75 candela.

(5) The flash rate shall be a minimum of 1 Hz and a maximum of 3 Hz.

(6) The appliance shall be placed 80 in (2030 mm) above the highest floor level within the space or 6 in (152 mm) below the ceiling, whichever is lower.

(7) In general, no place in any room or space required to have a visual signal appliance shall be more than 50 ft (15 m) from the signal (in the horizontal plane). In large rooms and spaces exceeding 100 ft (30 m) across, without obstructions 6 ft (2 m) above the finish floor, such as auditoriums, devices may be placed around the perimeter, spaced a maximum 100 ft (30 m) apart, in lieu of suspending appliances from the ceiling.

(8) No place in common corridors or hallways in which visual alarm signalling appliances are required shall be more than 50 ft (15 m) from the signal.

4.28.4* Auxiliary Alarms. *Units and* sleeping accommodations shall have a visual alarm connected to the building emergency alarm system or shall have a standard 110-volt electrical receptacle into which such an alarm can be connected *and a means by which a signal from the building emergency alarm system can trigger such an auxiliary alarm. When visual alarms are in place the signal shall be visible in all areas of the unit or room.* Instructions for use of the auxiliary alarm or receptacle shall be provided.

4.29 *Detectable* Warnings.

4.29.1 General. *Detectable* warnings *required by 4.1 and 4.7* shall comply with 4.29.

4.29.2* *Detectable* Warnings on Walking Surfaces. *Detectable* warnings shall consist of *raised truncated domes with a diameter of nominal 0.9 in (23 mm), a height of nominal 0.2 in (5 mm) and a center-to-center spacing of nominal 2.35 in (60 mm) and* shall contrast *visually* with *adjoining surfaces, either light-on-dark, or dark-on-light.*

The material used to provide contrast shall be an integral part of the walking surface. Detectable warnings used on interior surfaces shall differ from adjoining walking surfaces in resiliency or sound-on-cane contact.

4.29.3 *Detectable* Warnings on Doors To Hazardous Areas. *(Reserved).*

4.29.4 *Detectable* Warnings at Stairs. *(Reserved).*

4.29.5 *Detectable* Warnings at Hazardous Vehicular Areas. If a walk crosses or adjoins a vehicular way, *and the walking surfaces are not separated by* curbs, railings, or other elements *between the pedestrian areas and vehicular areas*, the boundary between the areas shall be defined by a continuous *detectable* warning *which is* 36 in (915 mm) wide, complying with 4.29.2.

4.29.6 *Detectable* Warnings at Reflecting Pools. The edges of reflecting pools shall be protected by railings, walls, curbs, or *detectable* warnings complying with 4.29.2.

4.29.7 Standardization. *(Reserved).*

4.30 Signage.

4.30.1* General. Signage *required to be accessible by 4.1 shall comply with the applicable provisions of 4.30.*

4.30.2* Character Proportion. Letters and numbers on signs shall have a width-to-height ratio between 3:5 and 1:1 and a stroke-width-to-height ratio between 1:5 and 1:10.

4.30.3 *Character Height.* *Characters and numbers on signs shall be sized according to the viewing distance from which they are to be read. The minimum height is measured using an upper case X. Lower case characters are permitted.*

Height Above Finished Floor	*Minimum Character Height*
Suspended or Projected Overhead in compliance with 4.4.2	*3 in. (75 mm) minimum*

4.30.4* Raised *and Brailled* Characters *and Pictorial Symbol Signs (Pictograms).* Letters and numerals shall be raised 1/32 in, *upper case*, sans serif *or simple serif type and shall be accompanied with Grade 2 Braille.* Raised characters shall be at least 5/8 in (16 mm) high, but no higher than 2 in (50 mm). *Pictograms shall be accompanied by the equivalent verbal description placed directly below the pictogram. The border dimension of the pictogram shall be 6 in (152 mm) minimum in height.*

4.30.5* *Finish and Contrast.* *The characters and background of signs shall be eggshell, matte, or other non-glare finish.* Characters and symbols shall contrast with their background — either light characters on a dark background or dark characters on a light background.

4.30.6 *Mounting Location and Height.* *Where permanent identification is provided for rooms and spaces, signs shall be installed on the wall adjacent to the latch side of the door. Where there is no wall space to the latch side of the door, including at double leaf doors, signs shall be placed on the nearest adjacent wall. Mounting height shall be 60 in (1525 mm) above the finish floor to the centerline of the sign. Mounting location for such signage shall be so that a person may approach within 3 in (76 mm) of signage without encountering protruding objects or standing within the swing of a door.*

4.30.7* Symbols of Accessibility.

(1) Facilities and elements required to be identified as accessible by 4.1 shall use the international symbol of accessibility. The

4.30 Signage

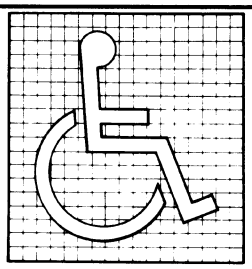

(a)
Proportions
International Symbol of Accessibility

(b)
Display Conditions
International Symbol of Accessibility

(c)
International TDD Symbol

(d)
International Symbol of Access for Hearing Loss

Fig. 43
International Symbols

symbol shall be displayed as shown in Fig. 43*(a) and (b)*.

(2) Volume Control Telephones. Telephones required to have a volume control by 4.1.3(17)(b) shall be identified by a sign containing a depiction of a telephone handset with radiating sound waves.

(3) Text Telephones. Text telephones required by 4.1.3 (17)(c) shall be identified by the international TDD symbol (Fig 43(c)). In addition, if a facility has a public text telephone, directional signage indicating the location of the nearest text telephone shall be placed adjacent to all banks of telephones which do not contain a text telephone. Such directional signage shall include the international TDD symbol. If a facility has no banks of telephones, the directional signage shall be provided at the entrance (e.g., in a building directory).

(4) Assistive Listening Systems. In assembly areas where permanently installed assistive listening systems are required by 4.1.3(19)(b) the availability of such systems shall be identified with signage that includes the international symbol of access for hearing loss (Fig 43(d)).

4.30.8* Illumination Levels. *(Reserved).*

4.31 Telephones.

4.31.1 General. Public telephones *required to be accessible by 4.1* shall comply with 4.31.

4.31.2 Clear Floor or Ground Space. A clear floor or ground space at least 30 in by 48 in (760 mm by 1220 mm) that allows either a forward or parallel approach by a person using a wheelchair shall be provided at telephones (see Fig. 44). The clear floor or ground space shall comply with 4.2.4. Bases, enclosures, and fixed seats shall not impede approaches to telephones by people who use wheelchairs.

4.31.3* Mounting Height. The highest operable part of the telephone shall be within the reach ranges specified in 4.2.5 or 4.2.6.

4.31.4 ***Protruding Objects.*** *Telephones shall comply with 4.4.*

4.31 Telephones

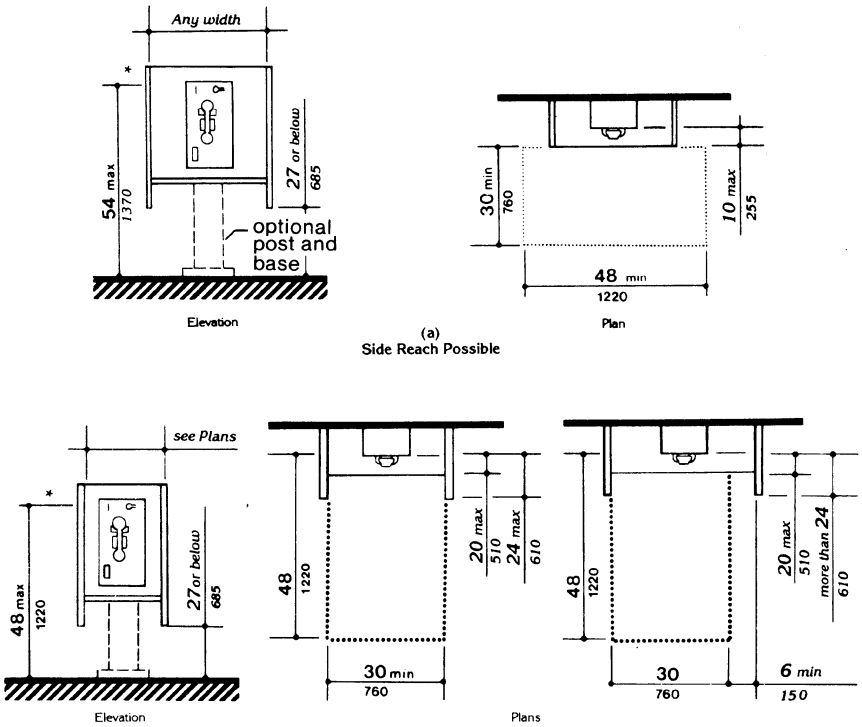

*Height to highest operable parts which are essential to basic operation of telephone.

Fig. 44
Mounting Heights and Clearances for Telephones

4.31.5 *Hearing Aid Compatible and Volume Control Telephones Required by 4.1.*

(1) Telephones shall be hearing aid compatible.

(2) Volume controls, *capable of a minimum of 12 dbA and a maximum of 18 dbA above normal, shall be provided in accordance with 4.1.3. If an automatic reset is provided then 18 dbA may be exceeded.*

4.31.6 Controls. Telephones shall have pushbutton controls where service for such equipment is available.

55

4.31.7 Telephone Books. Telephone books, if provided, shall be located *in a position that complies with the reach ranges specified in 4.2.5 and 4.2.6.*

4.31.8 Cord Length. The cord from the telephone to the handset shall be at least 29 in (735 mm) long.

4.31.9* Text Telephones Required by 4.1.

(1) Text telephones used with a pay telephone shall be permanently affixed within, or adjacent to, the telephone enclosure. If an acoustic coupler is used, the telephone cord shall be sufficiently long to allow connection of the text telephone and the telephone receiver.

(2) Pay telephones designed to accommodate a portable text telephone shall be equipped with a shelf and an electrical outlet within or adjacent to the telephone enclosure. The telephone handset shall be capable of being placed flush on the surface of the shelf. The shelf shall be capable of accommodating a text telephone and shall have 6 in (152 mm) minimum vertical clearance in the area where the text telephone is to be placed.

(3) Equivalent facilitation may be provided. For example, a portable text telephone may be made available in a hotel at the registration desk if it is available on a 24-hour basis for use with nearby public pay telephones. In this instance, at least one pay telephone shall comply with paragraph 2 of this section. In addition, if an acoustic coupler is used, the telephone handset cord shall be sufficiently long so as to allow connection of the text telephone and the telephone receiver. Directional signage shall be provided and shall comply with 4.30.7.

4.32 *Fixed or Built-in* Seating and Tables.

4.32.1 Minimum Number. Fixed or built-in seating or tables *required to be accessible by 4.1* shall comply with 4.32.

4.32.2 Seating. If seating spaces for people in wheelchairs are provided at *fixed* tables or counters, clear floor space complying with 4.2.4 shall be provided. Such clear floor space shall not overlap knee space by more than 19 in (485 mm) (see Fig. 45).

4.32.3 Knee Clearances. If seating for people in wheelchairs is provided at tables *or* counters, knee spaces at least 27 in (685 mm) high, 30 in (760 mm) wide, and 19 in (485 mm) deep shall be provided (see Fig. 45).

4.32.4* Height of Tables or Counters. The tops of *accessible* tables and *counters* shall be from 28 in to 34 in (710 mm to 865 mm) *above the finish* floor or ground.

4.33 Assembly Areas.

4.33.1 Minimum Number. Assembly *and associated* areas *required to be accessible by 4.1 shall comply with 4.33.*

4.33.2* Size of Wheelchair Locations. Each wheelchair location shall provide minimum clear ground or floor spaces as shown in Fig. 46.

4.33.3* Placement of Wheelchair Locations. Wheelchair areas shall be an integral part of any fixed seating plan and shall be *provided so as to provide people with physical disabilities a choice of admission prices and lines of sight comparable to those for members of the general public.* They shall adjoin an accessible route that also serves as a means of egress in case of emergency. *At least one companion fixed seat shall be provided next to each wheelchair seating area. When the seating capacity exceeds 300, wheelchair spaces shall be provided in more than one location. Readily removable seats may be installed in wheelchair spaces when the spaces are not required to accommodate wheelchair users.*

EXCEPTION: Accessible viewing positions may be clustered for bleachers, balconies, and other areas having sight lines that require slopes of greater than 5 percent. Equivalent accessible viewing positions may be located on levels having accessible egress.

4.33.4 Surfaces. The ground or floor at wheelchair locations shall be level and shall comply with 4.5.

4.33 Assembly Areas

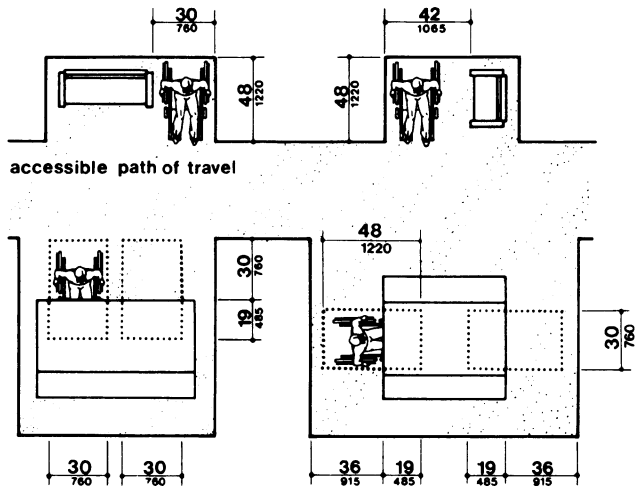

Fig. 45
Minimum Clearances for Seating and Tables

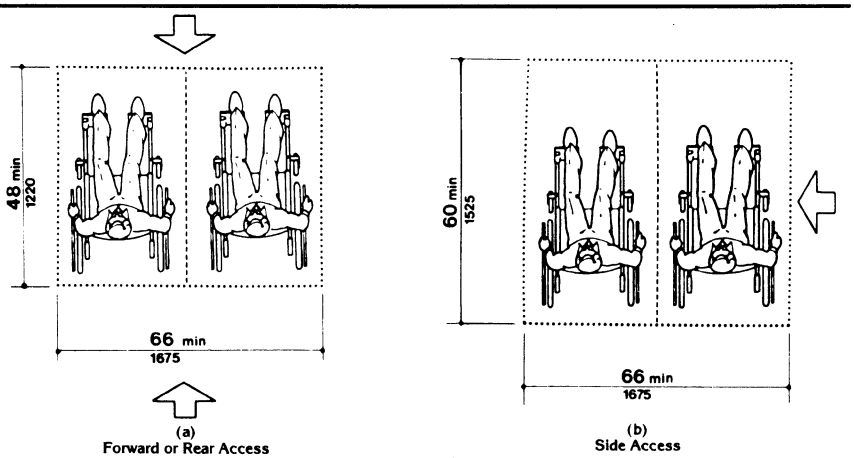

Fig. 46
Space Requirements for Wheelchair
Seating Spaces in Series

57

4.33.5 Access to Performing Areas

4.33.5 Access to Performing Areas. An accessible route shall connect wheelchair seating locations with performing areas, including stages, arena floors, dressing rooms, locker rooms, and other spaces used by performers.

4.33.6* Placement of Listening Systems. If the listening system provided serves individual fixed seats, then such seats shall be located within a 50 ft (15 m) viewing distance of the stage or playing area and shall have a complete view of the stage or playing area.

4.33.7* Types of Listening Systems. *Assistive listening systems (ALS) are intended to augment standard public address and audio systems by providing signals which can be received directly by persons with special receivers or their own hearing aids and which eliminate or filter background noise. The type of assistive listening system appropriate for a particular application depends on the characteristics of the setting, the nature of the program, and the intended audience. Magnetic induction loops, infra-red and radio frequency systems are types of listening systems which are appropriate for various applications.*

4.34 Automated Teller Machines.

4.34.1 General. *Each automated teller machine required to be accessible by 4.1.3 shall be on an accessible route and shall comply with 4.34.*

4.34.2 Clear Floor Space. *The automated teller machine shall be located so that clear floor space complying with 4.2.4 is provided to allow a person using a wheelchair to make a forward approach, a parallel approach, or both, to the machine.*

4.34.3 Reach Ranges.

(1) Forward Approach Only. If only a forward approach is possible, operable parts of all controls shall be placed within the forward reach range specified in 4.2.5.

(2) Parallel Approach Only. If only a parallel approach is possible, operable parts of controls shall be placed as follows:

(a) Reach Depth Not More Than 10 in (255 mm). Where the reach depth to the operable parts of all controls as measured from the vertical plane perpendicular to the edge of the unobstructed clear floor space at the farthest protrusion of the automated teller machine or surround is not more than 10 in (255 mm), the maximum height above the finished floor or grade shall be 54 in (1370 mm).

(b) Reach Depth More Than 10 in (255 mm). Where the reach depth to the operable parts of any control as measured from the vertical plane perpendicular to the edge of the unobstructed clear floor space at the farthest protrusion of the automated teller machine or surround is more than 10 in (255 mm), the maximum height above the finished floor or grade shall be as follows:

Reach Depth		***Maximum Height***	
In	*Mm*	*In*	*Mm*
10	*255*	*54*	*1370*
11	*280*	*53½*	*1360*
12	*305*	*53*	*1345*
13	*330*	*52½*	*1335*
14	*355*	*51½*	*1310*
15	*380*	*51*	*1295*
16	*405*	*50½*	*1285*
17	*430*	*50*	*1270*
18	*455*	*49½*	*1255*
19	*485*	*49*	*1245*
20	*510*	*48½*	*1230*
21	*535*	*47½*	*1205*
22	*560*	*47*	*1195*
23	*585*	*46½*	*1180*
24	*610*	*46*	*1170*

(3) Forward and Parallel Approach. If both a forward and parallel approach are possible, operable parts of controls shall be placed within at least one of the reach ranges in paragraphs (1) or (2) of this section.

(4) Bins. Where bins are provided for envelopes, waste paper, or other purposes, at least one of each type provided shall comply with the applicable reach ranges in paragraph (1), (2), or (3) of this section.

EXCEPTION: Where a function can be performed in a substantially equivalent manner by using an alternate control, only one of the controls needed to perform that function is required to comply with this section. If the controls are identified by tactile markings, such markings shall be provided on both controls.

4.34.4 Controls. *Controls for user activation shall comply with 4.27.4.*

4.34.5 Equipment for Persons with Vision Impairments. *Instructions and all information for use shall be made accessible to and independently usable by persons with vision impairments.*

4.35 Dressing and Fitting Rooms.

4.35.1 General. *Dressing and fitting rooms required to be accessible by 4.1 shall comply with 4.35 and shall be on an accessible route.*

4.35.2 Clear Floor Space. *A clear floor space allowing a person using a wheelchair to make a 180-degree turn shall be provided in every accessible dressing room entered through a swinging or sliding door. No door shall swing into any part of the turning space. Turning space shall not be required in a private dressing room entered through a curtained opening at least 32 in (815 mm) wide if clear floor space complying with section 4.2 renders the dressing room usable by a person using a wheelchair.*

4.35.3 Doors. *All doors to accessible dressing rooms shall be in compliance with section 4.13.*

4.35.4 Bench. *Every accessible dressing room shall have a 24 in by 48 in (610 mm by 1220 mm) bench fixed to the wall along the longer dimension. The bench shall be mounted 17 in to 19 in (430 mm to 485 mm) above the finish floor. Clear floor space shall be provided alongside the bench to allow a person using a wheelchair to make a parallel transfer onto the bench. The structural strength of the bench and attachments shall comply with 4.26.3. Where installed in conjunction with showers, swimming pools, or other wet locations, water shall not accumulate upon the surface of the bench and the bench shall have a slip-resistant surface.*

4.35.5 Mirror. *Where mirrors are provided in dressing rooms of the same use, then in an accessible dressing room, a full-length mirror, measuring at least 18 in wide by 54 in high (460 mm by 1370 mm), shall be mounted in a position affording a view to a person on the bench as well as to a person in a standing position.*

NOTE: Sections 4.1.1 through 4.1.7 and sections 5 through 10 are different from ANSI A117.1 in their entirety and are printed in standard type.

5. RESTAURANTS AND CAFETERIAS.

5.1* General. Except as specified or modified in this section, restaurants and cafeterias shall comply with the requirements of 4.1 to 4.35. Where fixed tables (or dining counters where food is consumed but there is no service) are provided, at least 5 percent, but not less than one, of the fixed tables (or a portion of the dining counter) shall be accessible and shall comply with 4.32 as required in 4.1.3(18). In establishments where separate areas are designated for smoking and non-smoking patrons, the required number of accessible fixed tables (or counters) shall be proportionally distributed between the smoking and non-smoking areas. In new construction, and where practicable in alterations, accessible fixed tables (or counters) shall be distributed throughout the space or facility.

5.2 Counters and Bars. Where food or drink is served at counters exceeding 34 in (865 mm) in height for consumption by customers seated on stools or standing at the counter, a portion of the main counter which is 60 in (1525 mm) in length minimum shall be provided in compliance with 4.32 or service shall be available at accessible tables within the same area.

5.3 Access Aisles. All accessible fixed tables shall be accessible by means of an access aisle at least 36 in (915 mm) clear between parallel edges of tables or between a wall and the table edges.

5.4 Dining Areas. In new construction, all dining areas, including raised or sunken dining areas, loggias, and outdoor seating areas, shall be accessible. In non-elevator buildings, an accessible means of vertical access to the mezzanine is not required under the following conditions: 1) the area of mezzanine seating measures no more than 33 percent of the area of the total accessible seating area; 2) the same services and decor are provided in an accessible space usable by the general public; and, 3) the accessible areas are not restricted to use by people with disabilities. In alterations, accessibility to raised or sunken dining areas, or to all parts of outdoor seating areas is not required provided that the same services and decor are provided in an accessible space usable by the general public and are not restricted to use by people with disabilities.

5.5 Food Service Lines. Food service lines shall have a minimum clear width of 36 in (915 mm), with a preferred clear width of 42 in (1065 mm) to allow passage around a person using a wheelchair. Tray slides shall be mounted no higher than 34 in (865 mm) above the floor (see Fig. 53). If self-service shelves

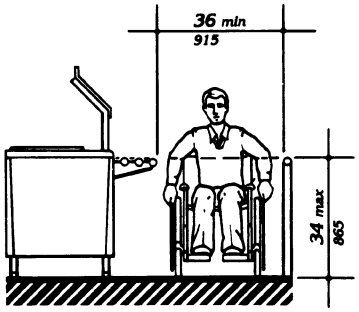

Fig. 53
Food Service Lines

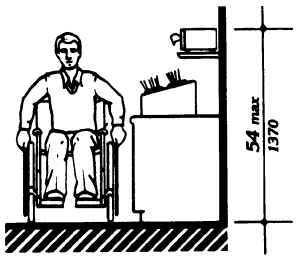

Fig. 54
Tableware Areas

6.0 Medical Care Facilities

are provided, at least 50 percent of each type must be within reach ranges specified in 4.2.5 and 4.2.6.

5.6 Tableware and Condiment Areas. Self-service shelves and dispensing devices for tableware, dishware, condiments, food and beverages shall be installed to comply with 4.2 (see Fig. 54).

5.7 Raised Platforms. In banquet rooms or spaces where a head table or speaker's lectern is located on a raised platform, the platform shall be accessible in compliance with 4.8 or 4.11. Open edges of a raised platform shall be protected by placement of tables or by a curb.

5.8 Vending Machines and Other Equipment. Spaces for vending machines and other equipment shall comply with 4.2 and shall be located on an accessible route.

5.9 Quiet Areas. (Reserved).

6. MEDICAL CARE FACILITIES.

6.1 General. Medical care facilities included in this section are those in which people receive physical or medical treatment or care and where persons may need assistance in responding to an emergency and where the period of stay may exceed twenty-four hours. In addition to the requirements of 4.1 through 4.35, medical care facilities and buildings shall comply with 6.

(1) Hospitals - general purpose hospitals, psychiatric facilities, detoxification facilities — At least 10 percent of patient bedrooms and toilets, and all public use and common use areas are required to be designed and constructed to be accessible.

(2) Hospitals and rehabilitation facilities that specialize in treating conditions that affect mobility, or units within either that specialize in treating conditions that affect mobility — All patient bedrooms and toilets, and all public use and common use areas are required to be designed and constructed to be accessible.

(3) Long term care facilities, nursing homes — At least 50 percent of patient bedrooms and toilets, and all public use and common use areas are required to be designed and constructed to be accessible.

(4) Alterations to patient bedrooms.

(a) When patient bedrooms are being added or altered as part of a planned renovation of an entire wing, a department, or other discrete area of an existing medical facility, a percentage of the patient bedrooms that are being added or altered shall comply with 6.3. The percentage of accessible rooms provided shall be consistent with the percentage of rooms required to be accessible by the applicable requirements of 6.1(1), 6.1(2), or 6.1(3), until the number of accessible patient bedrooms in the facility equals the overall number that would be required if the facility were newly constructed. (For example, if 20 patient bedrooms are being altered in the obstetrics department of a hospital, 2 of the altered rooms must be made accessible. If, within the same hospital, 20 patient bedrooms are being altered in a unit that specializes in treating mobility impairments, all of the altered rooms must be made accessible.) Where toilet/bath rooms are part of patient bedrooms which are added or altered and required to be accessible, each such patient toilet/bathroom shall comply with 6.4.

(b) When patient bedrooms are being added or altered individually, and not as part of an alteration of the entire area, the altered patient bedrooms shall comply with 6.3, unless either: a) the number of accessible rooms provided in the department or area containing the altered patient bedroom equals the number of accessible patient bedrooms that would be required if the percentage requirements of 6.1(1), 6.1(2), or 6.1(3) were applied to that department or area; or b) the number of accessible patient bedrooms in the facility equals the overall number that would be required if the facility were newly constructed. Where toilet/bathrooms are part of patient bedrooms which are added or altered and required to be accessible, each such toilet/bathroom shall comply with 6.4.

6.2 Entrances. At least one accessible entrance that complies with 4.14 shall be protected from the weather by canopy or roof overhang. Such entrances shall incorporate a passenger loading zone that complies with 4.6.6.

6.3 Patient Bedrooms. Provide accessible patient bedrooms in compliance with 4.1 through 4.35. Accessible patient bedrooms shall comply with the following:

(1) Each bedroom shall have a door that complies with 4.13.

EXCEPTION: Entry doors to acute care hospital bedrooms for in-patients shall be exempted from the requirement in 4.13.6 for maneuvering space at the latch side of the door if the door is at least 44 in (1120 mm) wide.

(2) Each bedroom shall have adequate space to provide a maneuvering space that complies with 4.2.3. In rooms with 2 beds, it is preferable that this space be located between beds.

(3) Each bedroom shall have adequate space to provide a minimum clear floor space of 36 in (915 mm) along each side of the bed and to provide an accessible route complying with 4.3.3 to each side of each bed.

6.4 Patient Toilet Rooms. Where toilet/bath rooms are provided as a part of a patient bedroom, each patient bedroom that is required to be accessible shall have an accessible toilet/bath room that complies with 4.22 or 4.23 and shall be on an accessible route.

7. BUSINESS AND MERCANTILE.

7.1 General. In addition to the requirements of 4.1 to 4.35, the design of all areas used for business transactions with the public shall comply with 7.

7.2 Sales and Service Counters, Teller Windows, Information Counters.

(1) In department stores and miscellaneous retail stores where counters have cash registers and are provided for sales or distribution of goods or services to the public, at least one of each type shall have a portion of the counter which is at least 36 in (915 mm) in length with a maximum height of 36 in (915 mm) above the finish floor. It shall be on an accessible route complying with 4.3. The accessible counters must be dispersed throughout the building or facility. In alterations where it is technically infeasible to provide an accessible counter, an auxiliary counter meeting these requirements may be provided.

(2) At ticketing counters, teller stations in a bank, registration counters in hotels and motels, box office ticket counters, and other counters that may not have a cash register but at which goods or services are sold or distributed, either:

(i) a portion of the main counter which is a minimum of 36 in (915 mm) in length shall be provided with a maximum height of 36 in (915 mm); or

(ii) an auxiliary counter with a maximum height of 36 in (915 mm) in close proximity to the main counter shall be provided; or

(iii) equivalent facilitation shall be provided (e.g., at a hotel registration counter, equivalent facilitation might consist of: (1) provision of a folding shelf attached to the main counter on which an individual with disabilities can write, and (2) use of the space on the side of the counter or at the concierge desk, for handing materials back and forth).

All accessible sales and service counters shall be on an accessible route complying with 4.3.

(3)* Assistive Listening Devices. (Reserved)

7.3* Check-out Aisles.

(1) In new construction, accessible check-out aisles shall be provided in conformance with the table below:

Total Check-out Aisles of Each Design	Minimum Number of Accessible Check-out Aisles (of each design)
1 - 4	1
5 - 8	2
9 - 15	3
over 15	3, plus 20% of additional aisles

EXCEPTION: In new construction, where the selling space is under 5000 square feet, only one check-out aisle is required to be accessible.

EXCEPTION: In alterations, at least one check-out aisle shall be accessible in facilities under 5000 square feet of selling space. In facilities of 5000 or more square feet of selling space, at least one of each design of check-out aisle shall be made accessible when altered until the number of accessible check-out aisles of each design equals the number required in new construction.

Examples of check-out aisles of different "design" include those which are specifically designed to serve different functions. Different "design" includes but is not limited to the following features - length of belt or no belt; or permanent signage designating the aisle as an express lane.

(2) Clear aisle width for accessible check-out aisles shall comply with 4.2.1 and maximum adjoining counter height shall not exceed 38 in (965 mm) above the finish floor. The top of the lip shall not exceed 40 in (1015 mm) above the finish floor.

(3) Signage identifying accessible check-out aisles shall comply with 4.30.7 and shall be mounted above the check-out aisle in the same location where the check-out number or type of check-out is displayed.

7.4 Security Bollards. Any device used to prevent the removal of shopping carts from store premises shall not prevent access or egress to people in wheelchairs. An alternate entry that is equally convenient to that provided for the ambulatory population is acceptable.

8. LIBRARIES.

8.1 General. In addition to the requirements of 4.1 to 4.35, the design of all public areas of a library shall comply with 8, including reading and study areas, stacks, reference rooms, reserve areas, and special facilities or collections.

8.2 Reading and Study Areas. At least 5 percent or a minimum of one of each element of fixed seating, tables, or study carrels shall comply with 4.2 and 4.32. Clearances between fixed accessible tables and between study carrels shall comply with 4.3.

8.3 Check-Out Areas. At least one lane at each check-out area shall comply with 7.2(1). Any traffic control or book security gates or turnstiles shall comply with 4.13.

8.4 Card Catalogs and Magazine Displays. Minimum clear aisle space at card catalogs and magazine displays shall comply with Fig. 55. Maximum reach height shall comply with 4.2, with a height of 48 in (1220 mm) preferred irrespective of approach allowed.

8.5 Stacks. Minimum clear aisle width between stacks shall comply with 4.3, with a minimum clear aisle width of 42 in (1065 mm) preferred where possible. Shelf height in stack areas is unrestricted (see Fig. 56).

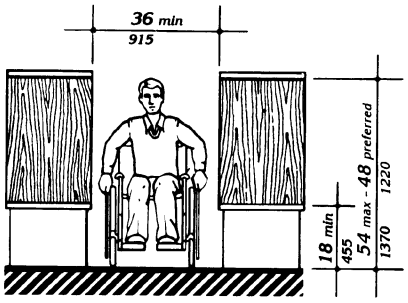

Fig. 55
Card Catalog

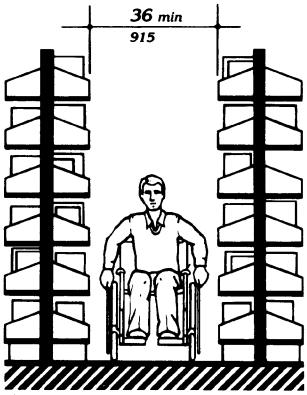

Fig. 56
Stacks

9. ACCESSIBLE TRANSIENT LODGING.

(1) Except as specified in the special technical provisions of this section, accessible transient lodging shall comply with the applicable requirements of 4.1 through 4.35. Transient lodging includes facilities or portions thereof used for sleeping accommodations, when not classed as a medical care facility.

9.1 Hotels, Motels, Inns, Boarding Houses, Dormitories, Resorts and Other Similar Places of Transient Lodging.

9.1.1 General. All public use and common use areas are required to be designed and constructed to comply with section 4 (Accessible Elements and Spaces: Scope and Technical Requirements).

EXCEPTION: Sections 9.1 through 9.4 do not apply to an establishment located within a building that contains not more than five rooms for rent or hire and that is actually occupied by the proprietor of such establishment as the residence of such proprietor.

9.1.2 Accessible Units, Sleeping Rooms, and Suites. Accessible sleeping rooms or suites that comply with the requirements of 9.2 (Requirements for Accessible Units, Sleeping Rooms, and Suites) shall be provided in conformance with the table below. In addition, in hotels, of 50 or more sleeping rooms or suites, additional accessible sleeping rooms or suites that include a roll-in shower shall also be provided in conformance with the table below. Such accommodations shall comply with the requirements of 9.2, 4.21, and Figure 57(a) or (b).

9.1.3 Sleeping Accommodations for Persons with Hearing Impairments

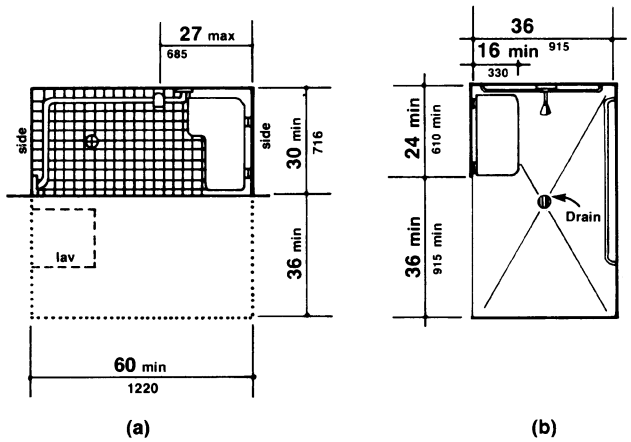

Fig. 57
Roll-in Shower with Folding Seat

Number of Rooms	Accessible Rooms	Rooms with Roll-in Showers
1 to 25	1	
26 to 50	2	
51 to 75	3	1
76 to 100	4	1
101 to 150	5	2
151 to 200	6	2
201 to 300	7	3
301 to 400	8	4
401 to 500	9	4 plus one for each additional 100 over 400
501 to 1000	2% of total	
1001 and over	20 plus 1 for each 100 over 1000	

9.1.3 Sleeping Accommodations for Persons with Hearing Impairments. In addition to those accessible sleeping rooms and suites required by 9.1.2, sleeping rooms and suites that comply with 9.3 (Visual Alarms, Notification Devices, and Telephones) shall be provided in conformance with the following table:

Number of Elements	Accessible Elements
1 to 25	1
26 to 50	2
51 to 75	3
76 to 100	4
101 to 150	5
151 to 200	6
201 to 300	7
301 to 400	8
401 to 500	9
501 to 1000	2% of total
1001 and over	20 plus 1 for each 100 over 1000

9.1.4 Classes of Sleeping Accommodations.

(1) In order to provide persons with disabilities a range of options equivalent to those available to other persons served by the facility, sleeping rooms and suites required to be accessible by 9.1.2 shall be dispersed among the various classes of sleeping accommodations available to patrons of the place of transient lodging. Factors to be considered include room size, cost, amenities provided, and the number of beds provided.

(2) Equivalent Facilitation. For purposes of this section, it shall be deemed equivalent facilitation if the operator of a facility elects to limit construction of accessible rooms to those intended for multiple occupancy, provided that such rooms are made available at the cost of a single-occupancy room to an individual with disabilities who requests a single-occupancy room.

9.1.5. Alterations to Accessible Units, Sleeping Rooms, and Suites. When sleeping rooms are being altered in an existing facility, or portion thereof, subject to the requirements of this section, at least one sleeping room or suite that complies with the requirements of 9.2 (Requirements for Accessible Units, Sleeping Rooms, and Suites) shall be provided for each 25 sleeping rooms, or fraction thereof, of rooms being altered until the number of such rooms provided equals the number required to be accessible with 9.1.2. In addition, at least one sleeping room or suite that complies with the requirements of 9.3 (Visual Alarms, Notification Devices, and Telephones) shall be provided for each 25 sleeping rooms, or fraction thereof, of rooms being altered until the number of such rooms equals the number required to be accessible by 9.1.3.

9.2 Requirements for Accessible Units, Sleeping Rooms and Suites.

9.2.1 General. Units, sleeping rooms, and suites required to be accessible by 9.1 shall comply with 9.2.

9.2.2 Minimum Requirements. An accessible unit, sleeping room or suite shall be on an accessible route complying with 4.3 and have the following accessible elements and spaces.

(1) Accessible sleeping rooms shall have a 36 in (915 mm) clear width maneuvering space located along both sides of a bed, except that where two beds are provided, this requirement can be met by providing a 36 in (915 mm) wide maneuvering space located between the two beds.

(2) An accessible route complying with 4.3 shall connect all accessible spaces and elements, including telephones, within the unit, sleeping room, or suite. This is not intended to require an elevator in multi-story units as long as the spaces identified in 9.2.2(6) and (7) are on accessible levels and the accessible sleeping area is suitable for dual occupancy.

(3) Doors and doorways designed to allow passage into and within all sleeping rooms, suites or other covered units shall comply with 4.13.

(4) If fixed or built-in storage facilities such as cabinets, shelves, closets, and drawers are provided in accessible spaces, at least one of each type provided shall contain storage space complying with 4.25. Additional storage may be provided outside of the dimensions required by 4.25.

(5) All controls in accessible units, sleeping rooms, and suites shall comply with 4.27.

(6) Where provided as part of an accessible unit, sleeping room, or suite, the following spaces shall be accessible and shall be on an accessible route:

(a) the living area.

(b) the dining area.

(c) at least one sleeping area.

(d) patios, terraces, or balconies.

EXCEPTION: The requirements of 4.13.8 and 4.3.8 do not apply where it is necessary to utilize a higher door threshold or a change in level to protect the integrity of the unit from wind/water damage. Where this exception results in patios, terraces or balconies that are not at an accessible level, equivalent facilitation

shall be provided. (E.g., equivalent facilitation at a hotel patio or balcony might consist of providing raised decking or a ramp to provide accessibility.)

(e) at least one full bathroom (i.e., one with a water closet, a lavatory, and a bathtub or shower).

(f) if only half baths are provided, at least one half bath.

(g) carports, garages or parking spaces.

(7) Kitchens, Kitchenettes, or Wet Bars. When provided as accessory to a sleeping room or suite, kitchens, kitchenettes, wet bars, or similar amenities shall be accessible. Clear floor space for a front or parallel approach to cabinets, counters, sinks, and appliances shall be provided to comply with 4.2.4. Countertops and sinks shall be mounted at a maximum height of 34 in (865 mm) above the floor. At least fifty percent of shelf space in cabinets or refrigerator/freezers shall be within the reach ranges of 4.2.5 or 4.2.6 and space shall be designed to allow for the operation of cabinet and/or appliance doors so that all cabinets and appliances are accessible and usable. Controls and operating mechanisms shall comply with 4.27.

(8) Sleeping room accommodations for persons with hearing impairments required by 9.1 and complying with 9.3 shall be provided in the accessible sleeping room or suite.

9.3 Visual Alarms, Notification Devices and Telephones.

9.3.1 General. In sleeping rooms required to comply with this section, auxiliary visual alarms shall be provided and shall comply with 4.28.4. Visual notification devices shall also be provided in units, sleeping rooms and suites to alert room occupants of incoming telephone calls and a door knock or bell. Notification devices shall not be connected to auxiliary visual alarm signal appliances. Permanently installed telephones shall have volume controls complying with 4.31.5; an accessible electrical outlet within 4 ft (1220 mm) of a telephone connection shall be provided to facilitate the use of a text telephone.

9.3.2 Equivalent Facilitation. For purposes of this section, equivalent facilitation shall include the installation of electrical outlets (including outlets connected to a facility's central alarm system) and telephone wiring in sleeping rooms and suites to enable persons with hearing impairments to utilize portable visual alarms and communication devices provided by the operator of the facility.

9.4 Other Sleeping Rooms and Suites.

Doors and doorways designed to allow passage into and within all sleeping units or other covered units shall comply with 4.13.5.

9.5 Transient Lodging in Homeless Shelters, Halfway Houses, Transient Group Homes, and Other Social Service Establishments.

9.5.1 New Construction. In new construction all public use and common use areas are required to be designed and constructed to comply with section 4. At least one of each type of amenity (such as washers, dryers and similar equipment installed for the use of occupants) in each common area shall be accessible and shall be located on an accessible route to any accessible unit or sleeping accommodation.

EXCEPTION: Where elevators are not provided as allowed in 4.1.3(5), accessible amenities are not required on inaccessible floors as long as one of each type is provided in common areas on accessible floors.

9.5.2 Alterations.

(1) Social service establishments which are not homeless shelters:

(a) The provisions of 9.5.3 and 9.1.5 shall apply to sleeping rooms and beds.

(b) Alteration of other areas shall be consistent with the new construction provisions of 9.5.1.

(2) Homeless shelters. If the following elements are altered, the following requirements apply:

(a) at least one public entrance shall allow a person with mobility impairments to approach, enter and exit including a minimum clear door width of 32 in (815 mm).

(b) sleeping space for homeless persons as provided in the scoping provisions of 9.1.2 shall include doors to the sleeping area with a minimum clear width of 32 in (815 mm) and maneuvering space around the beds for persons with mobility impairments complying with 9.2.2(1).

(c) at least one toilet room for each gender or one unisex toilet room shall have a minimum clear door width of 32 in (815 mm), minimum turning space complying with 4.2.3, one water closet complying with 4.16, one lavatory complying with 4.19 and the door shall have a privacy latch; and, if provided, at least one tub or shower shall comply with 4.20 or 4.21, respectively.

(d) at least one common area which a person with mobility impairments can approach, enter and exit including a minimum clear door width of 32 in (815 mm).

(e) at least one route connecting elements (a), (b), (c) and (d) which a person with mobility impairments can use including minimum clear width of 36 in (915 mm), passing space complying with 4.3.4, turning space complying with 4.2.3 and changes in levels complying with 4.3.8.

(f) homeless shelters can comply with the provisions of (a)-(e) by providing the above elements on one accessible floor.

9.5.3. Accessible Sleeping Accommodations in New Construction. Accessible sleeping rooms shall be provided in conformance with the table in 9.1.2 and shall comply with 9.2 Accessible Units, Sleeping Rooms and Suites (where the items are provided). Additional sleeping rooms that comply with 9.3 Sleeping Accommodations for Persons with Hearing Impairments shall be provided in conformance with the table provided in 9.1.3.

In facilities with multi-bed rooms or spaces, a percentage of the beds equal to the table provided in 9.1.2 shall comply with 9.2.2(1).

10. TRANSPORTATION FACILITIES.

10.1 General. Every station, bus stop, bus stop pad, terminal, building or other transportation facility, shall comply with the applicable provisions of 4.1 through 4.35, sections 5 through 9, and the applicable provisions of this section. The exceptions for elevators in 4.1.3(5), exception 1 and 4.1.6(1)(k) do not apply to a terminal, depot, or other station used for specified public transportation, or an airport passenger terminal, or facilities subject to Title II.

10.2 Bus Stops and Terminals.

10.2.1 New Construction.

(1) Where new bus stop pads are constructed at bus stops, bays or other areas where a lift or ramp is to be deployed, they shall have a firm, stable surface; a minimum clear length of 96 inches (measured from the curb or vehicle roadway edge) and a minimum clear width of 60 inches (measured parallel to the vehicle roadway) to the maximum extent allowed by legal or site constraints; and shall be connected to streets, sidewalks or pedestrian paths by an accessible route complying with 4.3 and 4.4. The slope of the pad parallel to the roadway shall, to the extent practicable, be the same as the roadway. For water drainage, a maximum slope of 1:50 (2%) perpendicular to the roadway is allowed.

(2) Where provided, new or replaced bus shelters shall be installed or positioned so as to permit a wheelchair or mobility aid user to enter from the public way and to reach a location, having a minimum clear floor area of 30 inches by 48 inches, entirely within the perimeter of the shelter. Such shelters shall be connected by an accessible route to the boarding area provided under paragraph (1) of this section.

(3) Where provided, all new bus route identification signs shall comply with 4.30.5. In addition, to the maximum extent practicable, all new bus route identification signs shall comply with 4.30.2 and 4.30.3. Signs

10.3 Fixed Facilities and Stations

that are sized to the maximum dimensions permitted under legitimate local, state or federal regulations or ordinances shall be considered in compliance with 4.30.2 and 4.30.3 for purposes of this section.

EXCEPTION: Bus schedules, timetables, or maps that are posted at the bus stop or bus bay are not required to comply with this provision.

10.2.2 Bus Stop Siting and Alterations.

(1) Bus stop sites shall be chosen such that, to the maximum extent practicable, the areas where lifts or ramps are to be deployed comply with section 10.2.1(1) and (2).

(2) When new bus route identification signs are installed or old signs are replaced, they shall comply with the requirements of 10.2.1(3).

10.3 Fixed Facilities and Stations.

10.3.1 New Construction. New stations in rapid rail, light rail, commuter rail, intercity bus, intercity rail, high speed rail, and other fixed guideway systems (e.g., automated guideway transit, monorails, etc.) shall comply with the following provisions, as applicable:

(1) Elements such as ramps, elevators or other circulation devices, fare vending or other ticketing areas, and fare collection areas shall be placed to minimize the distance which wheelchair users and other persons who cannot negotiate steps may have to travel compared to the general public. The circulation path, including an accessible entrance and an accessible route, for persons with disabilities shall, to the maximum extent practicable, coincide with the circulation path for the general public. Where the circulation path is different, signage complying with 4.30.1, 4.30.2, 4.30.3, 4.30.5, and 4.30.7(1) shall be provided to indicate direction to and identify the accessible entrance and accessible route.

(2) In lieu of compliance with 4.1.3(8), at least one entrance to each station shall comply with 4.14, Entrances. If different entrances to a station serve different transportation fixed routes or groups of fixed routes, at least one entrance serving each group or route shall comply with 4.14, Entrances. All accessible entrances shall, to the maximum extent practicable, coincide with those used by the majority of the general public.

(3) Direct connections to commercial, retail, or residential facilities shall have an accessible route complying with 4.3 from the point of connection to boarding platforms and all transportation system elements used by the public. Any elements provided to facilitate future direct connections shall be on an accessible route connecting boarding platforms and all transportation system elements used by the public.

(4) Where signs are provided at entrances to stations identifying the station or the entrance, or both, at least one sign at each entrance shall comply with 4.30.4 and 4.30.6. Such signs shall be placed in uniform locations at entrances within the transit system to the maximum extent practicable.

EXCEPTION: Where the station has no defined entrance, but signage is provided, then the accessible signage shall be placed in a central location.

(5) Stations covered by this section shall have identification signs complying with 4.30.1, 4.30.2, 4.30.3, and 4.30.5. Signs shall be placed at frequent intervals and shall be clearly visible from within the vehicle on both sides when not obstructed by another train. When station identification signs are placed close to vehicle windows (i.e., on the side opposite from boarding) each shall have the top of the highest letter or symbol below the top of the vehicle window and the bottom of the lowest letter or symbol above the horizontal mid-line of the vehicle window.

(6) Lists of stations, routes, or destinations served by the station and located on boarding areas, platforms, or mezzanines shall comply with 4.30.1, 4.30.2, 4.30.3, and 4.30.5. A minimum of one sign identifying the specific station and complying with 4.30.4 and 4.30.6 shall be provided on each platform or boarding area. All signs referenced in this paragraph shall, to the maximum extent practicable, be placed in uniform locations within the transit system.

10.3 Fixed Facilities and Stations

(7)* Automatic fare vending, collection and adjustment (e.g., add-fare) systems shall comply with 4.34.2, 4.34.3, 4.34.4, and 4.34.5. At each accessible entrance such devices shall be located on an accessible route. If self-service fare collection devices are provided for the use of the general public, at least one accessible device for entering, and at least one for exiting, unless one device serves both functions, shall be provided at each accessible point of entry or exit. Accessible fare collection devices shall have a minimum clear opening width of 32 inches; shall permit passage of a wheelchair; and, where provided, coin or card slots and controls necessary for operation shall comply with 4.27. Gates which must be pushed open by wheelchair or mobility aid users shall have a smooth continuous surface extending from 2 inches above the floor to 27 inches above the floor and shall comply with 4.13. Where the circulation path does not coincide with that used by the general public, accessible fare collection systems shall be located at or adjacent to the accessible point of entry or exit.

(8) Platform edges bordering a drop-off and not protected by platform screens or guard rails shall have a detectable warning. Such detectable warnings shall comply with 4.29.2 and shall be 24 inches wide running the full length of the platform drop-off.

(9) In stations covered by this section, rail-to-platform height in new stations shall be coordinated with the floor height of new vehicles so that the vertical difference, measured when the vehicle is at rest, is within plus or minus 5/8 inch under normal passenger load conditions. For rapid rail, light rail, commuter rail, high speed rail, and intercity rail systems in new stations, the horizontal gap, measured when the new vehicle is at rest, shall be no greater than 3 inches. For slow moving automated guideway "people mover" transit systems, the horizontal gap in new stations shall be no greater than 1 inch.

EXCEPTION 1: Existing vehicles operating in new stations may have a vertical difference with respect to the new platform within plus or minus 1-1/2 inches.

EXCEPTION 2: In light rail, commuter rail and intercity rail systems where it is not operationally or structurally feasible to meet the horizontal gap or vertical difference requirements, mini-high platforms, car-borne or platform-mounted lifts, ramps or bridge plates, or similar manually deployed devices, meeting the applicable requirements of 36 CFR part 1192, or 49 CFR part 38 shall suffice.

(10) Stations shall not be designed or constructed so as to require persons with disabilities to board or alight from a vehicle at a location other than one used by the general public.

(11) Illumination levels in the areas where signage is located shall be uniform and shall minimize glare on signs. Lighting along circulation routes shall be of a type and configuration to provide uniform illumination.

(12) Text Telephones: The following shall be provided in accordance with 4.31.9:

(a) If an interior public pay telephone is provided in a transit facility (as defined by the Department of Transportation) at least one interior public text telephone shall be provided in the station.

(b) Where four or more public pay telephones serve a particular entrance to a rail station and at least one is in an interior location, at least one interior public text telephone shall be provided to serve that entrance. Compliance with this section constitutes compliance with section 4.1.3(17)(c).

(13) Where it is necessary to cross tracks to reach boarding platforms, the route surface shall be level and flush with the rail top at the outer edge and between the rails, except for a maximum 2-1/2 inch gap on the inner edge of each rail to permit passage of wheel flanges. Such crossings shall comply with 4.29.5. Where gap reduction is not practicable, an above-grade or below-grade accessible route shall be provided.

(14) Where public address systems are provided to convey information to the public in terminals, stations, or other fixed facilities, a means of conveying the same or equivalent information to persons with hearing loss or who are deaf shall be provided.

10.3.2 Existing Facilities: Key Stations.

(15) Where clocks are provided for use by the general public, the clock face shall be uncluttered so that its elements are clearly visible. Hands, numerals, and/or digits shall contrast with the background either light-on-dark or dark-on-light. Where clocks are mounted overhead, numerals and/or digits shall comply with 4.30.3. Clocks shall be placed in uniform locations throughout the facility and system to the maximum extent practicable.

(16) Where provided in below grade stations, escalators shall have a minimum clear width of 32 inches. At the top and bottom of each escalator run, at least two contiguous treads shall be level beyond the comb plate before the risers begin to form. All escalator treads shall be marked by a strip of clearly contrasting color, 2 inches in width, placed parallel to and on the nose of each step. The strip shall be of a material that is at least as slip resistant as the remainder of the tread. The edge of the tread shall be apparent from both ascending and descending directions.

(17) Where provided, elevators shall be glazed or have transparent panels to allow an unobstructed view both in to and out of the car. Elevators shall comply with 4.10.

EXCEPTION: Elevator cars with a clear floor area in which a 60 inch diameter circle can be inscribed may be substituted for the minimum car dimensions of 4.10, Fig. 22.

(18) Where provided, ticketing areas shall permit persons with disabilities to obtain a ticket and check baggage and shall comply with 7.2.

(19) Where provided, baggage check-in and retrieval systems shall be on an accessible route complying with 4.3, and shall have space immediately adjacent complying with 4.2. If unattended security barriers are provided, at least one gate shall comply with 4.13. Gates which must be pushed open by wheelchair or mobility aid users shall have a smooth continuous surface extending from 2 inches above the floor to 27 inches above the floor.

10.3.2 Existing Facilities: Key Stations.

(1) Rapid, light and commuter rail key stations, as defined under criteria established by the Department of Transportation in subpart C of 49 CFR part 37 and existing intercity rail stations shall provide at least one accessible route from an accessible entrance to those areas necessary for use of the transportation system.

(2) The accessible route required by 10.3.2(1) shall include the features specified in 10.3.1 (1), (4)-(9), (11)-(15), and (17)-(19).

(3) Where technical infeasibility in existing stations requires the accessible route to lead from the public way to a paid area of the transit system, an accessible fare collection system, complying with 10.3.1(7), shall be provided along such accessible route.

(4) In light rail, rapid rail and commuter rail key stations, the platform or a portion thereof and the vehicle floor shall be coordinated so that the vertical difference, measured when the vehicle is at rest, is within plus or minus 1-1/2 inches under all normal passenger load conditions, and the horizontal gap, measured when the vehicle is at rest, is no greater than 3 inches for at least one door of each vehicle or car required to be accessible by 49 CFR part 37.

EXCEPTION 1: Existing vehicles retrofitted to meet the requirements of 49 CFR 37.93 (one-car-per-train rule) shall be coordinated with the platform such that, for at least one door, the vertical difference between the vehicle floor and the platform, measured when the vehicle is at rest with 50% normal passenger capacity, is within plus or minus 2 inches and the horizontal gap is no greater than 4 inches.

EXCEPTION 2: Where it is not structurally or operationally feasible to meet the horizontal gap or vertical difference requirements, mini-high platforms, car-borne or platform mounted lifts, ramps or bridge plates, or similar manually deployed devices, meeting the applicable requirements of 36 CFR part 1192, or 49 CFR part 38, shall suffice.

(5) New direct connections to commercial, retail, or residential facilities shall, to the maximum extent feasible, have an accessible route complying with 4.3 from the point of connection to boarding platforms and all transportation system elements used by the public. Any elements provided to facilitate future direct connections shall be on an accessible route connecting boarding platforms and all transportation system elements used by the public.

10.3.3 Existing Facilities: Alterations.

(1) For the purpose of complying with 4.1.6(2) Alterations to an Area Containing a Primary Function, an area of primary function shall be as defined by applicable provisions of 49 CFR 37.43(c) (Department of Transportation's ADA Rule) or 28 CFR 36.403 (Department of Justice's ADA Rule).

10.4. Airports.

10.4.1 New Construction.

(1) Elements such as ramps, elevators or other vertical circulation devices, ticketing areas, security checkpoints, or passenger waiting areas shall be placed to minimize the distance which wheelchair users and other persons who cannot negotiate steps may have to travel compared to the general public.

(2) The circulation path, including an accessible entrance and an accessible route, for persons with disabilities shall, to the maximum extent practicable, coincide with the circulation path for the general public. Where the circulation path is different, directional signage complying with 4.30.1, 4.30.2, 4.30.3 and 4.30.5 shall be provided which indicates the location of the nearest accessible entrance and its accessible route.

(3) Ticketing areas shall permit persons with disabilities to obtain a ticket and check baggage and shall comply with 7.2.

(4) Where public pay telephones are provided, and at least one is at an interior location, a public text telephone shall be provided in compliance with 4.31.9. Additionally, if four or more public pay telephones are located in any of the following locations, at least one public text telephone shall also be provided in that location:

(a) a main terminal outside the security areas;
(b) a concourse within the security areas; or
(c) a baggage claim area in a terminal.

Compliance with this section constitutes compliance with section 4.1.3(17)(c).

(5) Baggage check-in and retrieval systems shall be on an accessible route complying with 4.3, and shall have space immediately adjacent complying with 4.2.4. If unattended security barriers are provided, at least one gate shall comply with 4.13. Gates which must be pushed open by wheelchair or mobility aid users shall have a smooth continuous surface extending from 2 inches above the floor to 27 inches above the floor.

(6) Terminal information systems which broadcast information to the general public through a public address system shall provide a means to provide the same or equivalent information to persons with a hearing loss or who are deaf. Such methods may include, but are not limited to, visual paging systems using video monitors and computer technology. For persons with certain types of hearing loss such methods may include, but are not limited to, an assistive listening system complying with 4.33.7.

(7) Where clocks are provided for use by the general public the clock face shall be uncluttered so that its elements are clearly visible. Hands, numerals, and/or digits shall contrast with their background either light-on-dark or dark-on-light. Where clocks are mounted overhead, numerals and/or digits shall comply with 4.30.3. Clocks shall be placed in uniform locations throughout the facility to the maximum extent practicable.

(8) Security Systems. [Reserved]

10.5 Boat and Ferry Docks.

[Reserved]

APPENDIX

This appendix contains *materials of an advisory nature* and provides additional information that should help the reader to understand the minimum requirements of the *guidelines* or to design buildings or facilities for greater accessibility. The paragraph numbers correspond to the sections or paragraphs of the *guideline* to which the material relates and are therefore not consecutive (for example, A4.2.1 contains additional information relevant to 4.2.1). Sections *of the guidelines* for which additional material appears in this appendix have been indicated by an asterisk. *Nothing in this appendix shall in any way obviate any obligation to comply with the requirements of the guidelines itself.*

A2.2 Equivalent Facilitation. *Specific examples of equivalent facilitation are found in the following sections:*

4.1.6(3)(c)	*Elevators in Alterations*
4.31.9	*Text Telephones*
7.2	*Sales and Service Counters, Teller Windows, Information Counters*
9.1.4	*Classes of Sleeping Accommodations*
9.2.2(6)(d)	*Requirements for Accessible Units, Sleeping Rooms, and Suites*

A4.1.1 Application.

A4.1.1(3) Areas Used Only by Employees as Work Areas. *Where there are a series of individual work stations of the same type (e.g., laboratories, service counters, ticket booths), 5%, but not less than one, of each type of work station should be constructed so that an individual with disabilities can maneuver within the work stations. Rooms housing individual offices in a typical office building must meet the requirements of the guidelines concerning doors, accessible routes, etc. but do not need to allow for maneuvering space around individual desks. Modifications required to permit maneuvering within the work area may be accomplished as a reasonable accommodation to individual employees with disabilities under Title I of the ADA. Consideration should also be given to placing shelves in employee work areas at a convenient height for accessibility or installing commercially available shelving that is adjustable so that reasonable accommodations can be made in the future.*

If work stations are made accessible they should comply with the applicable provisions of 4.2 through 4.35.

A4.1.2 Accessible Sites and Exterior Facilities: New Construction.

A4.1.2(5)(e) Valet Parking. *Valet parking is not always usable by individuals with disabilities. For instance, an individual may use a type of vehicle controls that render the regular controls inoperable or the driver's seat in a van may be removed. In these situations, another person cannot park the vehicle. It is recommended that some self-parking spaces be provided at valet parking facilities for individuals whose vehicles cannot be parked by another person and that such spaces be located on an accessible route to the entrance of the facility.*

A4.1.3 Accessible Buildings: New Construction.

A4.1.3(5) *Only full passenger elevators are covered by the accessibility provisions of 4.10. Materials and equipment hoists, freight elevators not intended for passenger use, dumbwaiters, and construction elevators are not covered by these guidelines. If a building is exempt from the elevator requirement, it is not necessary to provide a platform lift or other means of vertical access in lieu of an elevator.*

Under Exception 4, platform lifts are allowed where existing conditions make it impractical to install a ramp or elevator. Such conditions generally occur where it is essential to provide access to small raised or lowered areas where space may not be available for a ramp. Examples include, but are not limited to, raised pharmacy platforms, commercial offices raised above a sales floor, or radio and news booths.

A4.1.3(9) *Supervised automatic sprinkler systems have built in signals for monitoring features of the system such as the opening and closing of water control valves, the power supplies for needed pumps, water tank levels, and for indicating conditions that will impair the satisfactory operation of the sprinkler system.*

A4.2 Space Allowances and Reach Ranges

Because of these monitoring features, supervised automatic sprinkler systems have a high level of satisfactory performance and response to fire conditions.

A4.1.3(10) *If an odd number of drinking fountains is provided on a floor, the requirement in 4.1.3(10)(b) may be met by rounding down the odd number to an even number and calculating 50% of the even number. When more than one drinking fountain on a floor is required to comply with 4.15, those fountains should be dispersed to allow wheelchair users convenient access. For example, in a large facility such as a convention center that has water fountains at several locations on a floor, the accessible water fountains should be located so that wheelchair users do not have to travel a greater distance than other people to use a drinking fountain.*

A4.1.3(17)(b) *In addition to the requirements of section 4.1.3(17)(b), the installation of additional volume controls is encouraged. Volume controls may be installed on any telephone.*

A4.1.3(19)(a) *Readily removable or folding seating units may be installed in lieu of providing an open space for wheelchair users. Folding seating units are usually two fixed seats that can be easily folded into a fixed center bar to allow for one or two open spaces for wheelchair users when necessary. These units are more easily adapted than removable seats which generally require the seat to be removed in advance by the facility management.*

Either a sign or a marker placed on seating with removable or folding arm rests is required by this section. Consideration should be given for ensuring identification of such seats in a darkened theater. For example, a marker which contrasts (light on dark or dark on light) and which also reflects light could be placed on the side of such seating so as to be visible in a lighted auditorium and also to reflect light from a flashlight.

A4.1.6 Accessible Buildings: Alterations.

A4.1.6(1)(h) *When an entrance is being altered, it is preferable that those entrances being altered be made accessible to the extent feasible.*

A4.2 Space Allowances and Reach Ranges.

A4.2.1 Wheelchair Passage Width.

(1) Space Requirements for Wheelchairs. Many persons who use wheelchairs need a 30 in (760 mm) clear opening width for doorways, gates, and the like, when the latter are entered head-on. If the *person* is unfamiliar with a building, if competing traffic is heavy, if sudden or frequent movements are needed, or if the wheelchair must be turned at an opening, then greater clear widths are needed. For most situations, the addition of an inch of leeway on either side is sufficient. Thus, a minimum clear width of 32 in (815 mm) will provide adequate clearance. However, when an opening or a restriction in a passageway is more than 24 in (610 mm) long, it is essentially a passageway and must be at least 36 in (915 mm) wide.

(2) Space Requirements for Use of Walking Aids. Although people who use walking aids can maneuver through clear width openings of 32 in (815 mm), they need 36 in (915 mm) wide passageways and walks for comfortable gaits. Crutch tips, often extending down at a wide angle, are a hazard in narrow passageways where they might not be seen by other pedestrians. Thus, the 36 in (915 mm) width provides a safety allowance both for the person *with a disability* and for others.

(3) Space Requirements for Passing. Able-bodied *persons* in winter clothing, walking

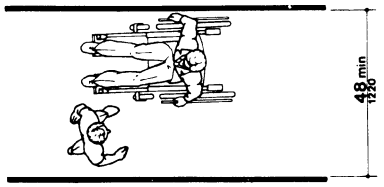

Fig. A1
Minimum Passage Width for One Wheelchair and One Ambulatory Person

A4.2 Space Allowances and Reach Ranges

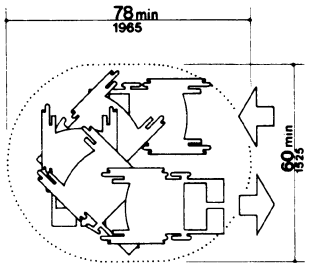

Fig. A2
Space Needed for Smooth U-Turn in a Wheelchair

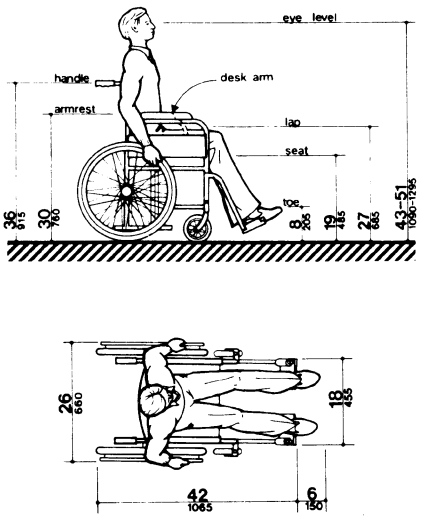

NOTE: Footrests may extend further for tall people

Fig. A3
Dimensions of Adult-Sized Wheelchairs

straight ahead with arms swinging, need 32 in (815 mm) of width, which includes 2 in (50 mm) on either side for sway, and another 1 in (25 mm) tolerance on either side for clearing nearby objects or other pedestrians. Almost all wheelchair users and those who use walking aids can also manage within this 32 in (815 mm) width for short distances. Thus, two streams of traffic can pass in 64 in (1625 mm) in a comfortable flow. Sixty inches (1525 mm) provides a minimum width for a somewhat more restricted flow. If the clear width is less than 60 in (1525 mm), two wheelchair users will not be able to pass but will have to seek a wider place for passing. Forty-eight inches (1220 mm) is the minimum width needed for an ambulatory person to pass a nonambulatory or semi-ambulatory person. Within this 48 in (1220 mm) width, the ambulatory person will have to twist to pass a wheelchair user, a person with a *service animal*, or a

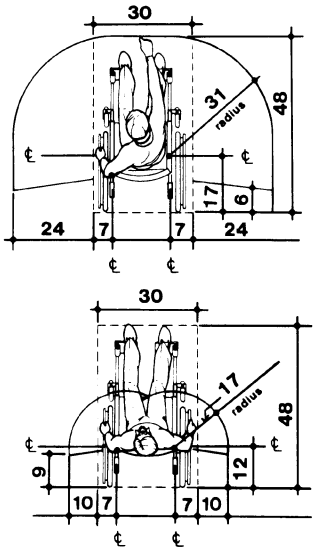

Fig. A3 (a)

A3

A4.3 Accessible Route

semi-ambulatory person. There will be little leeway for swaying or missteps (see Fig. A1).

A4.2.3 Wheelchair Turning Space. *These guidelines specify* a minimum space of 60 in (1525 mm) diameter *or a 60 in by 60 in (1525 mm by 1525 mm) T-shaped space* for a pivoting 180-degree turn of a wheelchair. This space is usually satisfactory for turning around, but many people will not be able to turn without repeated tries and bumping into surrounding objects. The space shown in Fig. A2 will allow most wheelchair users to complete U-turns without difficulty.

A4.2.4 Clear Floor or Ground Space for Wheelchairs. The wheelchair and user shown in Fig. A3 represent typical dimensions for a large adult male. The space requirements in this *guideline* are based upon maneuvering clearances that will accommodate most wheelchairs. Fig. A3 provides a uniform reference for design not covered by this *guideline.*

A4.2.5 & A4.2.6 Reach. *Reach ranges for persons seated in wheelchairs may be further clarified by Fig. A3(a). These drawings approximate in the plan view the information shown in Fig. 4, 5, and 6.*

A4.3 Accessible Route.

A4.3.1 General.

(1) Travel Distances. Many people with mobility impairments can move at only very slow speeds; for many, traveling 200 ft (61 m) could take about 2 minutes. This assumes a rate of about 1.5 ft/s (455 mm/s) on level ground. It also assumes that the traveler would move continuously. However, on trips over 100 ft (30 m), disabled people are apt to rest frequently, which substantially increases their trip times. Resting periods of 2 minutes for every 100 ft (30 m) can be used to estimate travel times for people with severely limited stamina. In inclement weather, slow progress and resting can greatly increase a disabled person's exposure to the elements.

(2) Sites. Level, indirect routes or those with running slopes lower than 1:20 can sometimes provide more convenience than direct routes with maximum allowable slopes or with ramps.

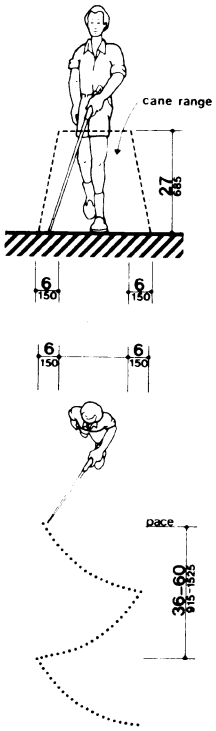

Fig. A4
Cane Technique

A4.3.10 Egress. Because people with disabilities may visit, be employed or be a resident in any building, emergency management plans with specific provisions to ensure their safe evacuation also play an essential role in fire safety and life safety.

A4.3.11.3 Stairway Width. *A 48 inch (1220 mm) wide exit stairway is needed to allow assisted evacuation (e.g., carrying a person in a wheelchair) without encroaching on the exit path for ambulatory persons.*

A4.3.11.4 Two-way Communication. *It is essential that emergency communication not be dependent on voice communications alone because the safety of people with hearing or speech impairments could be jeopardized. The visible signal requirement could be satisfied with something as simple as a button in the area of rescue assistance that lights, indicating that help is on the way, when the message is answered at the point of entry.*

A4.4 Protruding Objects.

A4.4.1 General. *Service animals* are trained to recognize and avoid hazards. However, most people with severe impairments of vision use the long cane as an aid to mobility. The two principal cane techniques are the touch technique, where the cane arcs from side to side and touches points outside both shoulders; and the diagonal technique, where the cane is held in a stationary position diagonally across the body with the cane tip touching or just above the ground at a point outside one shoulder and the handle or grip extending to a point outside the other shoulder. The touch technique is used primarily in uncontrolled areas, while the diagonal technique is used primarily in certain limited, controlled, and familiar environments. Cane users are often trained to use both techniques.

Potential hazardous objects are noticed only if they fall within the detection range of canes (see Fig. A4). Visually impaired people walking toward an object can detect an overhang if its lowest surface is not higher than 27 in (685 mm). When walking alongside *protruding* objects, they cannot detect overhangs. Since proper cane and *service animal* techniques keep people away from the edge of a path or from walls, a slight overhang of no more than 4 in (100 mm) is not hazardous.

A4.5 Ground and Floor Surfaces.

A4.5.1 General. *People who have difficulty walking or* maintaining balance *or who use crutches, canes, or walkers,* and those with restricted gaits are particularly sensitive to slipping and tripping hazards. For such people, a stable and regular surface is necessary for safe walking, particularly on stairs. Wheelchairs can be propelled most easily on surfaces that are hard, stable, and regular. Soft loose surfaces such as shag carpet, loose sand or gravel, wet clay, and irregular surfaces such as cobblestones can significantly impede wheelchair movement.

Slip resistance is based on the frictional force necessary to keep a shoe heel or crutch tip from slipping on a walking surface under conditions likely to be found on the surface. *While the dynamic coefficient of friction during walking varies in a complex and non-uniform way, the static coefficient of friction, which can be measured in several ways, provides a close approximation of the slip resistance of a surface. Contrary to popular belief, some slippage is necessary to walking, especially for persons with restricted gaits; a truly "non-slip" surface could not be negotiated.*

The Occupational Safety and Health Administration recommends that walking surfaces have a static coefficient of friction of 0.5. A research project sponsored by the Architectural and Transportation Barriers Compliance Board (Access Board) conducted tests with persons with disabilities and concluded that a higher coefficient of friction was needed by such persons. A static coefficient of friction of 0.6 is recommended for accessible routes and 0.8 for ramps.

It is recognized that the coefficient of friction varies considerably due to the presence of contaminants, water, floor finishes, and other factors not under the control of the designer or builder and not subject to design and construction guidelines and that compliance would be difficult to measure on the building site. Nevertheless, many common building materials suitable for flooring are now labeled with information on the static coefficient of friction. While it may not be possible to compare one product directly with another, or to guarantee a constant measure, builders and designers are encouraged to specify materials with appropriate values. As more products include information on slip resistance, improved uniformity in measurement and specification is likely. The Access Board's advisory guidelines on Slip Resistant Surfaces provides additional information on this subject.

Cross slopes on walks and ground or floor surfaces can cause considerable difficulty in propelling a wheelchair in a straight line.

A4.6 Parking and Passenger Loading Zones

A4.5.3 Carpet. Much more needs to be done in developing both quantitative and qualitative criteria for carpeting *(i.e., problems associated with texture and weave need to be studied).* However, certain functional characteristics are well established. When both carpet and padding are used, it is desirable to have minimum movement (preferably none) between the floor and the pad and the pad and the carpet which would allow the carpet to hump or warp. In heavily trafficked areas, a thick, soft (plush) pad or cushion, particularly in combination with long carpet pile, makes it difficult for individuals in wheelchairs and those with other ambulatory disabilities to get about. Firm carpeting can be achieved through proper selection and combination of pad and carpet, sometimes with the elimination of the pad or cushion, and with proper installation. *Carpeting designed with a weave that causes a zig-zag effect when wheeled across is strongly discouraged.*

A4.6 Parking and Passenger Loading Zones.

A4.6.3 Parking Spaces. *The increasing use of vans with side-mounted lifts or ramps by persons with disabilities has necessitated some revisions in specifications for parking spaces and adjacent access aisles. The typical accessible parking space is 96 in (2440 mm) wide with an adjacent 60 in (1525 mm) access aisle. However, this aisle does not permit lifts or ramps to be deployed and still leave room for a person using a wheelchair or other mobility aid to exit the lift platform or ramp. In tests conducted with actual lift/van/wheelchair combinations, (under a Board-sponsored Accessible Parking and Loading Zones Project) researchers found that a space and aisle totaling almost 204 in (5180 mm) wide was needed to deploy a lift and exit conveniently. The "van accessible" parking space required by these guidelines provides a 96 in (2440 mm) wide space with a 96 in (2440 mm) adjacent access aisle which is just wide enough to maneuver and exit from a side mounted lift. If a 96 in (2440 mm) access aisle is placed between two spaces, two "van accessible" spaces are created. Alternatively, if the wide access aisle is provided at the end of a row (an area often unused), it may be possible to provide the wide access aisle without additional space (see Fig. A5(a)).*

A sign is needed to alert van users to the presence of the wider aisle, but the space is not intended to be restricted only to vans.

"Universal" Parking Space Design. An alternative to the provision of a percentage of spaces with a wide aisle, and the associated need to include additional signage, is the use of what has been called the "universal" parking space design. Under this design, all accessible spaces are 132 in (3350 mm) wide with a 60 in (1525 mm) access aisle (see Fig. A5(b)). One

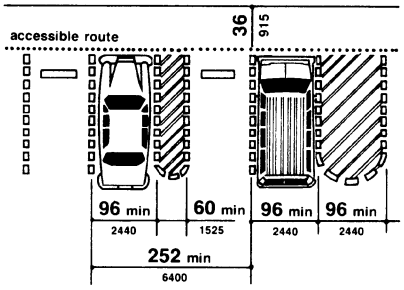

(a)
Van Accessible Space at End Row

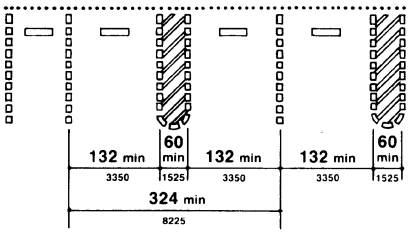

(b)
Universal Parking Space Design

Fig. A5
Parking Space Alternatives

advantage to this design is that no additional signage is needed because all spaces can accommodate a van with a side-mounted lift or ramp. Also, there is no competition between cars and vans for spaces since all spaces can accommodate either. Furthermore, the wider space permits vehicles to park to one side or the other within the 132 in (3350 mm) space to allow persons to exit and enter the vehicle on either the driver or passenger side, although, in some cases, this would require exiting or entering without a marked access aisle.

An essential consideration for any design is having the access aisle level with the parking space. Since a person with a disability, using a lift or ramp, must maneuver within the access aisle, the aisle cannot include a ramp or sloped area. The access aisle must be connected to an accessible route to the appropriate accessible entrance of a building or facility. The parking access aisle must either blend with the accessible route or have a curb ramp complying with 4.7. Such a curb ramp opening must be located within the access aisle boundaries, not within the parking space boundaries. Unfortunately, many facilities are designed with a ramp that is blocked when any vehicle parks in the accessible space. Also, the required dimensions of the access aisle cannot be restricted by planters, curbs or wheel stops.

A4.6.4 Signage. Signs designating parking places for disabled people can be seen from a driver's seat if the signs are mounted high enough above the ground and located at the front of a parking space.

A4.6.5 Vertical Clearance. High-top vans, which disabled people or transportation services often use, require higher clearances in parking garages than automobiles.

A4.8 Ramps.

A4.8.1 General. Ramps are essential for wheelchair users if elevators or lifts are not available to connect different levels. However, some people who use walking aids have difficulty with ramps and prefer stairs.

A4.8.2 Slope and Rise. *Ramp slopes between 1:16 and 1:20 are preferred.* The ability to manage an incline is related to both its slope and its length. Wheelchair users with disabilities affecting *their* arms or with low stamina have serious difficulty using inclines. Most ambulatory people and most people who use wheelchairs can manage a slope of 1:16. Many people cannot manage a slope of 1:12 for 30 ft (9 m).

A4.8.4 Landings. *Level landings are essential toward maintaining an aggregate slope that complies with these guidelines. A ramp landing that is not level causes individuals using wheelchairs to tip backward or bottom out when the ramp is approached.*

A4.8.5 Handrails. The requirements for stair and ramp handrails in this *guideline* are for adults. When children are principal users in a building or facility, a second set of handrails at an appropriate height can assist them and aid in preventing accidents.

A4.9 Stairs.

A4.9.1 Minimum Number. *Only interior and exterior stairs connecting levels that are not connected by an elevator, ramp, or other accessible means of vertical access have to comply with 4.9.*

A4.10 Elevators.

A4.10.6 Door Protective and Reopening Device. The required door reopening device would hold the door open for 20 seconds if the doorway remains obstructed. After 20 seconds, the door may begin to close. However, if designed in accordance with *ASME A17.1-1990*, the door closing movement could still be stopped if a person or object exerts sufficient force at any point on the door edge.

A4.10.7 Door and Signal Timing for Hall Calls. This paragraph allows variation in the location of call buttons, advance time for warning signals, and the door-holding period used to meet the time requirement.

A4.10.12 Car Controls. Industry-wide standardization of elevator control panel design would make all elevators significantly more convenient for use by people with severe visual impairments. In many cases, it will be possible to locate the highest control on elevator panels within 48 in (1220 mm) from the floor.

A4.11 Platform Lifts *(Wheelchair Lifts)*

A4.10.13 Car Position Indicators. A special button may be provided that would activate the audible signal within the given elevator only for the desired trip, rather than maintaining the audible signal in constant operation.

A4.10.14 Emergency Communications. A device that requires no handset is easier to use by people who have difficulty reaching. *Also, small handles on handset compartment doors are not usable by people who have difficulty grasping.*

Ideally, emergency two-way communication systems should provide both voice and visual display intercommunication so that persons with hearing impairments and persons with vision impairments can receive information regarding the status of a rescue. A voice intercommunication system cannot be the only means of communication because it is not accessible to people with speech and hearing impairments. While a voice intercommunication system is not required, at a minimum, the system should provide both an audio and visual indication that a rescue is on the way.

A4.11 Platform Lifts *(Wheelchair Lifts).*

A4.11.2 Other Requirements. *Inclined stairway chairlifts, and inclined and vertical platform lifts (wheelchair lifts) are available* for short-distance, vertical transportation of people with disabilities. Care should be taken in selecting lifts *as some lifts are not equally suitable for use by both wheelchair users and semi-ambulatory individuals.*

A4.12 Windows.

A4.12.1 General. *Windows intended to be operated by occupants in accessible spaces should comply with 4.12.*

A4.12.2 Window Hardware. *Windows requiring pushing, pulling, or lifting to open (for example, double-hung, sliding, or casement and awning units without cranks) should require no more than 5 lbf (22.2 N) to open or close. Locks, cranks, and other window hardware should comply with 4.27.*

A4.13 Doors.

A4.13.8 Thresholds at Doorways. Thresholds and surface height changes in doorways are particularly inconvenient for wheelchair users who also have low stamina or restrictions in arm movement because complex maneuvering is required to get over the level change while operating the door.

A4.13.9 Door Hardware. Some disabled persons must push against a door with their chair or walker to open it. Applied kickplates on doors with closers can reduce required maintenance by withstanding abuse from wheelchairs and canes. To be effective, they should cover the door width, less approximately 2 in (51 mm), up to a height of 16 in (405 mm) from its bottom edge and be centered across the *width of the door.*

A4.13.10 Door Closers. Closers with delayed action features give a person more time to maneuver through doorways. They are particularly useful on frequently used interior doors such as entrances to toilet rooms.

A4.13.11 Door Opening Force. Although most people with disabilities can exert at least 5 lbf (22.2N), both pushing and pulling from a stationary position, a few people with severe disabilities cannot exert 3 lbf (13.13N). Although some people cannot manage the allowable forces in this guideline and many others have difficulty, door closers must have certain minimum closing forces to close doors satisfactorily. Forces for pushing or pulling doors open are measured with a push-pull scale under the following conditions:

(1) Hinged doors: Force applied perpendicular to the door at the door opener or 30 in (760 mm) from the hinged side, whichever is farther from the hinge.

(2) Sliding or folding doors: Force applied parallel to the door at the door pull or latch.

(3) Application of force: Apply force gradually so that the applied force does not exceed the resistance of the door. In high-rise buildings, air-pressure differentials may require a modification of this specification in order to meet the functional intent.

A4.13.12 Automatic Doors and Power-Assisted Doors. Sliding automatic doors do not need guard rails and are more convenient for wheelchair users and visually impaired people to use. If slowly opening automatic doors can be reactivated before their closing cycle is completed, they will be more convenient in busy doorways.

A4.15 Drinking Fountains and Water Coolers.

A4.15.2 Spout Height. *Two drinking fountains, mounted side by side or on a single post, are usable by people with disabilities and people who find it difficult to bend over.*

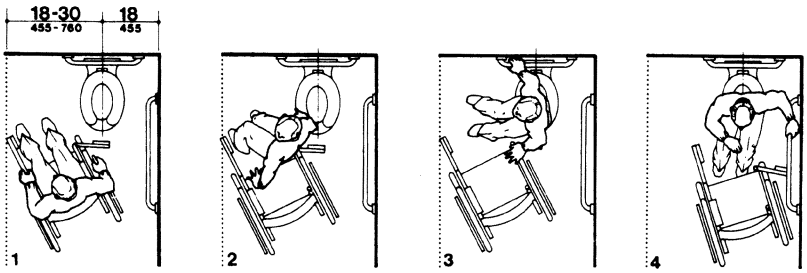

Takes transfer position, swings footrest out of the way, sets brakes.

Removes armrest, transfers.

Moves wheelchair out of the way, changes position (some people fold chair or pivot it 90° to the toilet).

Positions on toilet, releases brake.

(a)
Diagonal Approach

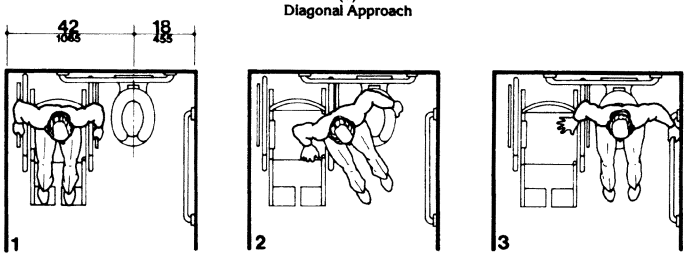

Takes transfer position, removes armrest, sets brakes.

Transfers.

Positions on toilet.

(b)
Side Approach

Fig. A6
Wheelchair Transfers

A4.16 Water Closets.

A4.16.3 Height. Height preferences for toilet seats vary considerably among disabled people. Higher seat heights may be an advantage to some ambulatory disabled people, but are often a disadvantage for wheelchair users and others. Toilet seats 18 in (455 mm) high seem to be a reasonable compromise. Thick seats and filler rings are available to adapt standard fixtures to these requirements.

A4.16.4 Grab Bars. Fig. A6(a) and (b) show the diagonal and side approaches most commonly used to transfer from a wheelchair to a water closet. Some wheelchair users can transfer from the front of the toilet while others use a 90-degree approach. Most people who use the two additional approaches can also use either the diagonal approach or the side approach.

A4.16.5 Flush Controls. Flush valves and related plumbing can be located behind walls or to the side of the toilet, or a toilet seat lid can be provided if plumbing fittings are directly behind the toilet seat. Such designs reduce the chance of injury and imbalance caused by leaning back against the fittings. Flush controls for tank-type toilets have a standardized mounting location on the left side of the tank (facing the tank). Tanks can be obtained by special order with controls mounted on the right side. If administrative authorities require flush controls for flush valves to be located in a position that conflicts with the location of the rear grab bar, then that bar may be split or shifted toward the wide side of the toilet area.

A4.17 Toilet Stalls.

A4.17.3 Size and Arrangement. *This section requires use of the 60 in (1525 mm) standard stall (Figure 30(a)) and permits the 36 in (915 mm) or 48 in (1220 mm) wide alternate stall (Figure 30(b)) only in alterations where provision of the standard stall is technically infeasible or where local plumbing codes prohibit reduction in the number of fixtures. A standard stall provides a clear space on one side of the water closet to enable persons who use wheelchairs to perform a side or diagonal transfer from the wheelchair to the water closet. However, some persons with disabilities who use mobility aids such as walkers, canes or crutches are better able to use the two parallel grab bars in the 36 in (915 mm) wide alternate stall to achieve a standing position.*

In large toilet rooms, where six or more toilet stalls are provided, it is therefore required that a 36 in (915 mm) wide stall with parallel grab bars be provided in addition to the standard stall required in new construction. The 36 in (915 mm) width is necessary to achieve proper use of the grab bars; wider stalls would position the grab bars too far apart to be easily used and narrower stalls would position the grab bars too close to the water closet. Since the stall is primarily intended for use by persons using canes, crutches and walkers, rather than wheelchairs, the length of the stall could be conventional. The door, however, must swing outward to ensure a usable space for people who use crutches or walkers.

A4.17.5 Doors. To make it easier for wheelchair users to close toilet stall doors, doors can be provided with closers, spring hinges, or a pull bar mounted on the inside surface of the door near the hinge side.

A4.19 Lavatories and Mirrors.

A4.19.6 Mirrors. If mirrors are to be used by both ambulatory people and wheelchair users, then they must be at least 74 in (1880 mm) high at their topmost edge. A single full length mirror can accommodate all people, including children.

A4.21 Shower Stalls.

A4.21.1 General. Shower stalls that are 36 in by 36 in (915 mm by 915 mm) wide provide additional safety to people who have difficulty maintaining balance because all grab bars and walls are within easy reach. Seated people use the walls of 36 in by 36 in (915 mm by 915 mm) showers for back support. Shower stalls that are 60 in (1525 mm) wide and have no curb may increase usability of a bathroom by wheelchair users because the shower area provides additional maneuvering space.

A4.22 Toilet Rooms.

A4.22.3 Clear Floor Space. *In many small facilities, single-user restrooms may be the only*

A4.22 Toilet Rooms

facilities provided for all building users. In addition, the guidelines allow the use of "unisex" or "family" accessible toilet rooms in alterations when technical infeasibility can be demonstrated. Experience has shown that the provision of accessible "unisex" or single-user restrooms is a reasonable way to provide access for wheelchair users and any attendants, especially when attendants are of the opposite sex. Since these facilities have proven so useful, it is often considered advantageous to install a "unisex" toilet room in new facilities in addition to making the multi-stall restrooms accessible, especially in shopping malls, large auditoriums, and convention centers.

Figure 28 (section 4.16) provides minimum clear floor space dimensions for toilets in accessible "unisex" toilet rooms. The dotted lines designate the minimum clear floor space, depending on the direction of approach, required for wheelchair users to transfer onto the water closet. The dimensions of 48 in (1220 mm) and 60 in (1525 mm), respectively, correspond to the space required for the two common transfer approaches utilized by wheelchair users (see Fig. A6). It is important to keep in mind that the placement of the lavatory to the immediate side of the water closet will preclude the side approach transfer illustrated in Figure A6(b).

To accommodate the side transfer, the space adjacent to the water closet must remain clear of obstruction for 42 in (1065 mm) from the centerline of the toilet (Figure 28) and the lavatory must not be located within this clear space. A turning circle or T-turn, the clear floor space at the lavatory, and maneuvering space at the door must be considered when determining the possible wall locations. A privacy latch or other accessible means of ensuring privacy during use should be provided at the door.

RECOMMENDATIONS:

1. In new construction, accessible single-user restrooms may be desirable in some situations because they can accommodate a wide variety of building users. However, they cannot be used in lieu of making the multi-stall toilet rooms accessible as required.

2. Where strict compliance to the guidelines for accessible toilet facilities is technically infeasible in the alteration of existing facilities, accessible "unisex" toilets are a reasonable alternative.

3. In designing accessible single-user restrooms, the provisions of adequate space to allow a side transfer will provide accommodation to the largest number of wheelchair users.

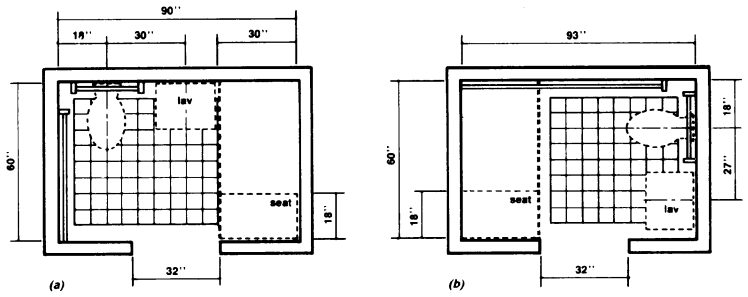

Fig. A7

A11

A4.23 Bathrooms, Bathing Facilities, and Shower Rooms

A4.23 Bathrooms, Bathing Facilities, and Shower Rooms.

A4.23.3 Clear Floor Space. *Figure A7 shows two possible configurations of a toilet room with a roll-in shower. The specific shower shown is designed to fit exactly within the dimensions of a standard bathtub. Since the shower does not have a lip, the floor space can be used for required maneuvering space. This would permit a toilet room to be smaller than would be permitted with a bathtub and still provide enough floor space to be considered accessible. This design can provide accessibility in facilities where space is at a premium (i.e., hotels and medical care facilities). The alternate roll-in shower (Fig. 57b) also provides sufficient room for the "T-turn" and does not require plumbing to be on more than one wall.*

A4.23.9 Medicine Cabinets. Other alternatives for storing medical and personal care items are very useful to disabled people. Shelves, drawers, and floor-mounted cabinets can be provided within the reach ranges of disabled people.

A4.26 Handrails, Grab Bars, and Tub and Shower Seats.

A4.26.1 General. Many disabled people rely heavily upon grab bars and handrails to maintain balance and prevent serious falls. Many people brace their forearms between supports and walls to give them more leverage and stability in maintaining balance or for lifting. The grab bar clearance of 1-1/2 in (38 mm) required in this guideline is a safety clearance to prevent injuries resulting from arms slipping through the openings. It also provides adequate gripping room.

A4.26.2 Size and Spacing of Grab Bars and Handrails. This specification allows for alternate shapes of handrails as long as they allow an opposing grip similar to that provided by a circular section of 1-1/4 in to 1-1/2 in (32 mm to 38 mm).

A4.27 Controls and Operating Mechanisms.

A4.27.3 Height. *Fig. A8 further illustrates*

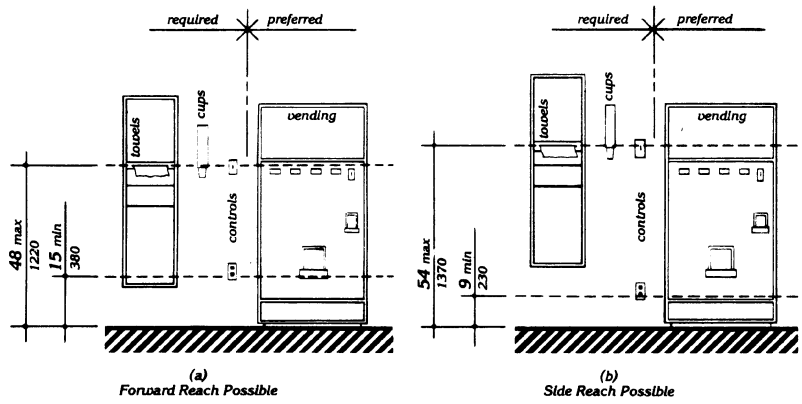

Fig. A8
Control Reach Limitations

mandatory and advisory control mounting height provisions for typical equipment.

Electrical receptacles installed to serve individual appliances and not intended for regular or frequent use by building occupants are not required to be mounted within the specified reach ranges. Examples would be receptacles installed specifically for wall-mounted clocks, refrigerators, and microwave ovens.

A4.28 Alarms.

A4.28.2 Audible Alarms. Audible emergency signals must have an intensity and frequency that can attract the attention of individuals who have partial hearing loss. People over 60 years of age generally have difficulty perceiving frequencies higher than 10,000 Hz. *An alarm signal which has a periodic element to its signal, such as single stroke bells (clang-pause-clang-pause), hi-low (up-down-up-down) and fast whoop (on-off-on-off) are best. Avoid continuous or reverberating tones. Select a signal which has a sound characterized by three or four clear tones without a great deal of "noise" in between.*

A4.28.3 Visual Alarms. The specifications in this section do not preclude the use of zoned or coded alarm systems.

A4.28.4 Auxiliary Alarms. Locating visual emergency alarms in rooms where persons who are deaf may work or reside alone can ensure that they will always be warned when an emergency alarm is activated. To be effective, such devices must be located and oriented so that they will spread signals and reflections throughout a space or raise the overall light level sharply. *However, visual alarms alone are not necessarily the best means to alert sleepers. A study conducted by Underwriters Laboratory (UL) concluded that a flashing light more than seven times brighter was required (110 candela v. 15 candela, at the same distance) to awaken sleepers as was needed to alert awake subjects in a normal daytime illuminated room.*

For hotel and other rooms where people are likely to be asleep, a signal-activated vibrator placed between mattress and box spring or under a pillow was found by UL to be much more effective in alerting sleepers. Many readily available devices are sound-activated so that they could respond to an alarm clock, clock radio, wake-up telephone call or room smoke detector. Activation by a building alarm system can either be accomplished by a separate circuit activating an auditory alarm which would, in turn, trigger the vibrator or by a signal transmitted through the ordinary 110-volt outlet. Transmission of signals through the power line is relatively simple and is the basis of common, inexpensive remote light control systems sold in many department and electronic stores for home use. So-called "wireless" intercoms operate on the same principal.

A4.29 *Detectable* Warnings.

A4.29.2 *Detectable* Warnings on Walking Surfaces. *The material used to provide contrast should contrast by at least 70%. Contrast in percent is determined by:*

$$Contrast = [(B_1 - B_2)/B_1] \times 100$$

where B_1 = light reflectance value (LRV) of the lighter area
and B_2 = light reflectance value (LRV) of the darker area.

Note that in any application both white and black are never absolute; thus, B_1 never equals 100 and B_2 is always greater than 0.

A4.30 Signage.

A4.30.1 General. In building complexes where finding locations independently on a routine basis may be a necessity (for example, college campuses), tactile maps or prerecorded instructions can be very helpful to visually impaired people. Several maps and auditory instructions have been developed and tested for specific applications. The type of map or instructions used must be based on the information to be communicated, which depends highly on the type of buildings or users.

Landmarks that can easily be distinguished by visually impaired individuals are useful as orientation cues. Such cues include changes in illumination level, bright colors, unique patterns, wall murals, location of special equipment or other architectural features.

Many people with disabilities have limitations in movement of their heads and reduced peripheral vision. Thus, signage positioned

A4.30 Signage

perpendicular to the path of travel is easiest for them to notice. People can generally distinguish signage within an angle of 30 degrees to either side of the centerlines of their faces without moving their heads.

A4.30.2 Character Proportion. The legibility of printed characters is a function of the viewing distance, character height, the ratio of the stroke width to the height of the character, the contrast of color between character and background, and print font. The size of characters must be based upon the intended viewing distance. A severely nearsighted person may have to be much closer to recognize a character of a given size than a person with normal visual acuity.

A4.30.4 Raised *and Brailled* Characters *and Pictorial Symbol Signs (Pictograms).* *The standard dimensions for literary Braille are as follows:*

Dot diameter	*.059 in.*
Inter-dot spacing	*.090 in.*
Horizontal separation between cells	*.241 in.*
Vertical separation between cells	*.395 in.*

Raised borders around *signs containing* raised characters may make them confusing to read unless the border is set far away from the characters. *Accessible signage with descriptive materials about public buildings, monuments, and objects of cultural interest may not provide sufficiently detailed and meaningful information. Interpretive guides, audio tape devices, or other methods may be more effective in presenting such information.*

A4.30.5 Finish and Contrast. *An eggshell finish (11 to 19 degree gloss on 60 degree glossimeter) is recommended. Research indicates that signs are more legible for persons with low vision when characters contrast with their background by at least 70 percent. Contrast in percent shall be determined by:*

$$Contrast = [(B_1 - B_2)/B_1] \times 100$$

where B_1 = light reflectance value (LRV) of the lighter area
and B_2 = light reflectance value (LRV) of the darker area.

Note that in any application both white and black are never absolute; thus, B_1 never equals 100 and B_2 is always greater than 0.

The greatest readability is usually achieved through the use of light-colored characters or symbols on a dark background.

A4.30.7 Symbols of Accessibility for Different Types of Listening Systems. *Paragraph 4 of this section requires signage indicating the availability of an assistive listening system. An appropriate message should be displayed with the international symbol of access for hearing loss since this symbol conveys general accessibility for people with hearing loss. Some suggestions are:*

INFRARED
ASSISTIVE LISTENING SYSTEM
AVAILABLE
——PLEASE ASK——

AUDIO LOOP IN USE
TURN T-SWITCH FOR
BETTER HEARING
——OR ASK FOR HELP——

FM
ASSISTIVE LISTENING
SYSTEM AVAILABLE
——PLEASE ASK——

The symbol may be used to notify persons of the availability of other auxiliary aids and services such as: real time captioning, captioned note taking, sign language interpreters, and oral interpreters.

A4.30.8 Illumination Levels. *Illumination levels on the sign surface shall be in the 100 to 300 lux range (10 to 30 footcandles) and shall be uniform over the sign surface. Signs shall be located such that the illumination level on the surface of the sign is not significantly exceeded by the ambient light or visible bright lighting source behind or in front of the sign.*

A4.31 Telephones.

A4.31.3 Mounting Height. In localities where the dial-tone first system is in operation, calls can be placed at a coin telephone through the operator without inserting coins. The operator button is located at a height of 46 in (1170 mm) if the coin slot of the telephone is at 54 in (1370 mm). A generally available public telephone with a coin slot mounted lower on the equipment would allow universal installation of telephones at a height of 48 in (1220 mm) or less to all operable parts.

A4.31.9 Text Telephones. *A public text telephone may be an integrated text telephone pay phone unit or a conventional portable text telephone that is permanently affixed within, or adjacent to, the telephone enclosure. In order to be usable with a pay phone, a text telephone which is not a single integrated text telephone pay phone unit will require a shelf large enough (10 in (255mm) wide by 10 in (255 mm) deep with a 6 in (150 mm) vertical clearance minimum) to accommodate the device, an electrical outlet, and a power cord. Movable or portable text telephones may be used to provide equivalent facilitation. A text telephone should be readily available so that a person using it may access the text telephone easily and conveniently. As currently designed pocket-type text telephones for personal use do not accommodate a wide range of users. Such devices would not be considered substantially equivalent to conventional text telephones. However, in the future as technology develops this could change.*

A4.32 *Fixed or Built-in* Seating and Tables.

A4.32.4 Height of *Tables or Counters.* Different types of work require different *table or counter* heights for comfort and optimal performance. Light detailed work such as writing requires a *table or counter* close to elbow height for a standing person. Heavy manual work such as rolling dough requires *a counter or table* height about 10 in (255 mm) below elbow height for a standing person. This principle of *high/low table or counter heights* also applies for seated persons; however, the limiting condition for seated manual work is clearance under the *table or counter.*

Table A1 shows convenient *counter heights* for seated persons. The great variety of heights for comfort and optimal performance indicates a need for alternatives or a compromise in height if people who stand and people who sit will be using the same counter area.

Table A1
Convenient Heights of Tables and Counters for Seated People[1]

Conditions of Use	Short Women in mm		Tall Men in mm	
Seated in a wheelchair:				
Manual work–				
Desk or removeable armrests	26	660	30	760
Fixed, full-size armrests[2]	32[3]	815	32[3]	815
Light detailed work:				
Desk or removable armrests	29	735	34	865
Fixed, full-size armrests[2]	32[3]	815	34	865
Seated in a 16-in. (405-mm) High chair:				
Manual work	26	660	27	685
Light detailed work	28	710	31	785

[1] All dimensions are based on a work-surface thickness of 1 1/2 in (38 mm) and a clearance of 1 1/2 in (38 mm) between legs and the underside of a work surface.

[2] This type of wheelchair arm does not interfere with the positioning of a wheelchair under a work surface.

[3] This dimension is limited by the height of the armrests: a lower height would be preferable. Some people in this group prefer lower work surfaces, which require positioning the wheelchair back from the edge of the counter.

A4.33 Assembly Areas.

A4.33.2 Size of Wheelchair Locations. Spaces large enough for two wheelchairs allow people who are coming to a performance together to sit together.

A4.33.3 Placement of Wheelchair Locations. The location of wheelchair areas can be planned so that a variety of positions

Table A2. Summary of Assistive Listening Devices

within the seating area are provided. This will allow choice in viewing and price categories.

Building/life safety codes set minimum distances between rows of fixed seats with consideration of the number of seats in a row, the exit aisle width and arrangement, and the location of exit doors. "Continental" seating, with a greater number of seats per row and a commensurate increase in row spacing and exit doors, facilitates emergency egress for all people and increases ease of access to mid-row seats especially for people who walk with difficulty. Consideration of this positive attribute of "continental" seating should be included along with all other factors in the design of fixed seating areas.

Table A2. Summary of Assistive Listening Devices

System	Advantages	Disadvantages	Typical Applications
Induction Loop Transmitter: Transducer wired to induction loop around listening area. Receiver: Self-contained induction receiver or personal hearing aid with telecoil.	Cost-Effective Low Maintenance Easy to use Unobtrusive May be possible to integrate into existing public address system. Some hearing aids can function as receivers.	Signal spills over to adjacent rooms. Susceptible to electrical interference. Limited portability Inconsistent signal strength. Head position affects signal strength. Lack of standards for induction coil performance.	Meeting areas Theaters Churches and Temples Conference rooms Classrooms TV viewing
FM Transmitter: Flashlight-sized worn by speaker. Receiver: With personal hearing aid via DAI or induction neck-loop and telecoil; or self-contained with earphone(s).	Highly portable Different channels allow use by different groups within the same room. High user mobility Variable for large range of hearing losses.	High cost of receivers Equipment fragile Equipment obtrusive High maintenance Expensive to maintain Custom fitting to individual user may be required.	Classrooms Tour groups Meeting areas Outdoor events One-on-one
Infrared Transmitter: Emitter in line-of-sight with receiver. Receiver: Self-contained. Or with personal hearing aid via DAI or induction neckloop and telecoil.	Easy to use Insures privacy or confidentiality Moderate cost Can often be integrated into existing public address system.	Line-of-sight required between emitter and receiver. Ineffective outdoors Limited portability Requires installation	Theaters Churches and Temples Auditoriums Meetings requiring confidentiality TV viewing

Source: Rehab Brief, National Institute on Disability and Rehabilitation Research, Washington, DC, Vol. XII, No. 10, (1990).

A16

A5.0 Restaurants and Cafeterias

A4.33.6 Placement of Listening Systems. A distance of 50 ft (15 m) allows a person to distinguish performers' facial expressions.

A4.33.7 Types of Listening Systems. *An assistive listening system appropriate for an assembly area for a group of persons or where the specific individuals are not known in advance, such as a playhouse, lecture hall or movie theater, may be different from the system appropriate for a particular individual provided as an auxiliary aid or as part of a reasonable accommodation. The appropriate device for an individual is the type that individual can use, whereas the appropriate system for an assembly area will necessarily be geared toward the "average" or aggregate needs of various individuals.* A listening system that can be used from any seat in a seating area is the most flexible way to meet this specification. Earphone jacks with variable volume controls can benefit only people who have slight hearing loss and do not help people who use hearing aids. At the present time, *magnetic induction* loops are the most feasible type of listening system for people who use hearing aids *equipped with "T-coils,"* but people without hearing aids or those with hearing aids not equipped with inductive pick-ups cannot use them *without special receivers.* Radio frequency systems can be extremely effective and inexpensive. People without hearing aids can use them, but people with hearing aids need a special receiver to use them as they are presently designed. If hearing aids had a jack to allow a by-pass of microphones, then radio frequency systems would be suitable for people with and without hearing aids. Some listening systems may be subject to interference from other equipment and feedback from hearing aids of people who are using the systems. Such interference can be controlled by careful engineering design that anticipates feedback sources in the surrounding area.

Table A2, reprinted from a National Institute of Disability and Rehabilitation Research "Rehab Brief," shows some of the advantages and disadvantages of different types of assistive listening systems. In addition, the Architectural and Transportation Barriers Compliance Board (Access Board) has published a pamphlet on Assistive Listening Systems which lists demonstration centers across the country where technical assistance can be obtained in selecting and installing appropriate systems. The state of New York has also adopted a detailed technical specification which may be useful.

A5.0 Restaurants and Cafeterias.

A5.1 General. *Dining counters (where there is no service) are typically found in small carry-out restaurants, bakeries, or coffee shops and may only be a narrow eating surface attached to a wall. This section requires that where such a dining counter is provided, a portion of the counter shall be at the required accessible height.*

A7.0 Business and Mercantile.

A7.2(3) Assistive Listening Devices. *At all sales and service counters, teller windows, box offices, and information kiosks where a physical barrier separates service personnel and customers, it is recommended that at least one permanently installed assistive listening device complying with 4.33 be provided at each location or series. Where assistive listening devices are installed, signage should be provided identifying those stations which are so equipped.*

A7.3 Check-out Aisles. *Section 7.2 refers to counters without aisles; section 7.3 concerns check-out aisles. A counter without an aisle (7.2) can be approached from more than one direction such as in a convenience store. In order to use a check-out aisle (7.3), customers must enter a defined area (an aisle) at a particular point, pay for goods, and exit at a particular point.*

A10.3 Fixed Facilities and Stations.

A10.3.1(7) Route Signs. *One means of making control buttons on fare vending machines usable by persons with vision impairments is to raise them above the surrounding surface. Those activated by a mechanical motion are likely to be more detectable. If farecard vending, collection, and adjustment devices are designed to accommodate farecards having one tactually distinctive corner, then a person who has a vision impairment will insert the card with greater ease. Token collection devices that are designed to accommodate tokens which are perforated can allow a person to distinguish more readily between tokens and common coins. Thoughtful placement of accessible gates and fare vending machines in relation to inaccessible devices will make their use and detection easier for all persons with disabilities.*

[56 FR 35592, July 26, 1991, as amended by Order No. 1679–93, 58 FR 17522, Apr. 5, 1993; Order No. 1836–94, 59 FR 2675, Jan. 18, 1994]

APPENDIX B TO PART 36—PREAMBLE TO REGULATION ON NONDISCRIMINATION ON THE BASIS OF DISABILITY BY PUBLIC ACCOMMODATIONS AND IN COMMERCIAL FACILITIES (PUBLISHED JULY 26, 1991)

NOTE: For the convenience of the reader, this appendix contains the text of the preamble to the final regulation on nondiscrimination on the basis of disability by public accommodations and in commercial facilities beginning at the heading ''Section-by-Section Analysis and Response to Comments'' and ending before ''List of Subjects in 28 CFR part 36'' (56 FR 35546, July 26, 1991).

SECTION-BY-SECTION ANALYSIS AND RESPONSE TO COMMENTS

Subpart A—General

Section 36.101 Purpose

Section 36.101 states the purpose of the rule, which is to effectuate title III of the Americans with Disabilities Act of 1990. This title prohibits discrimination on the basis of disability by public accommodations, requires places of public accommodation and commercial facilities to be designed, constructed, and altered in compliance with the accessibility standards established by this part, and requires that examinations or courses related to licensing or certification for professional or trade purposes be accessible to persons with disabilities.

Section 36.102 Application

Section 36.102 specifies the range of entities and facilities that have obligations under the final rule. The rule applies to any public accommodation or commercial facility as those terms are defined in §36.104. It also applies, in accordance with section 309 of the ADA, to private entities that offer examinations or courses related to applications, licensing, certification, or credentialing for secondary or postsecondary education, professional, or trade purposes. Except as provided in §36.206, ''Retaliation or coercion,'' this part does not apply to individuals other than public accommodations or to public entities. Coverage of private individuals and public entities is discussed in the preamble to §36.206.

As defined in §36.104, a public accommodation is a private entity that owns, leases or leases to, or operates a place of public accommodation. Section 36.102(b)(2) emphasizes that the general and specific public accommodations requirements of subparts B and C obligate a public accommodation only with respect to the operations of a place of public accommodation. This distinction is drawn in recognition of the fact that a private entity that meets the regulatory definition of public accommodation could also own, lease or lease to, or operate facilities that are not places of public accommodation. The rule would exceed the reach of the ADA if it were to apply the public accommodations requirements of subparts B and C to the operations of a private entity that do not involve a place of public accommodation. Similarly, §36.102(b)(3) provides that the new construction and alterations requirements of subpart D obligate a public accommodation only with respect to facilities used as, or designed or constructed for use as, places of public accommodation or commercial facilities.

On the other hand, as mandated by the ADA and reflected in §36.102(c), the new construction and alterations requirements of subpart D apply to a commercial facility whether or not the facility is a place of public accommodation, or is owned, leased, leased to, or operated by a public accommodation.

Section 36.102(e) states that the rule does not apply to any private club, religious entity, or public entity. Each of these terms is defined in §36.104. The exclusion of private clubs and religious entities is derived from section 307 of the ADA; and the exclusion of public entities is based on the statutory definition of public accommodation in section 301(7) of the ADA, which excludes entities other than private entities from coverage under title III of the ADA.

Section 36.103 Relationship to Other Laws

Section 36.103 is derived from sections 501 (a) and (b) of the ADA. Paragraph (a) provides that, except as otherwise specifically provided by this part, the ADA is not intended to apply lesser standards than are required under title V of the Rehabilitation Act of 1973, as amended (29 U.S.C. 790–794), or the regulations implementing that title. The standards of title V of the Rehabilitation Act apply for purposes of the ADA to the extent that the ADA has not explicitly adopted a different standard from title V. Where the ADA explicitly provides a different standard from section 504, the ADA standard applies to the ADA, but not to section 504. For example, section 504 requires that all federally assisted programs and activities be readily accessible to and usable by individuals with handicaps, even if major structural alterations are necessary to make a program accessible. Title III of the ADA, in contrast, only requires alterations to existing facilities if the modifications are ''readily achievable,'' that is, able to be accomplished easily and without much difficulty or expense. A public accommodation that is covered under both section 504 and the ADA is still required to meet the ''program accessibility'' standard in order to comply with section 504, but would not be in violation of the ADA unless

it failed to make ''readily achievable'' modifications. On the other hand, an entity covered by the ADA is required to make ''readily achievable'' modifications, even if the program can be made accessible without any architectural modifications. Thus, an entity covered by both section 504 and title III of the ADA must meet both the ''program accessibility'' requirement and the ''readily achievable'' requirement.

Paragraph (b) makes explicit that the rule does not affect the obligation of recipients of Federal financial assistance to comply with the requirements imposed under section 504 of the Rehabilitation Act of 1973.

Paragraph (c) makes clear that Congress did not intend to displace any of the rights or remedies provided by other Federal laws or other State or local laws (including State common law) that provide greater or equal protection to individuals with disabilities. A plaintiff may choose to pursue claims under a State law that does not confer greater substantive rights, or even confers fewer substantive rights, if the alleged violation is protected under the alternative law and the remedies are greater. For example, assume that a person with a physical disability seeks damages under a State law that allows compensatory and punitive damages for discrimination on the basis of physical disability, but does not allow them on the basis of mental disability. In that situation, the State law would provide narrower coverage, by excluding mental disabilities, but broader remedies, and an individual covered by both laws could choose to bring an action under both laws. Moreover, State tort claims confer greater remedies and are not preempted by the ADA. A plaintiff may join a State tort claim to a case brought under the ADA. In such a case, the plaintiff must, of course, prove all the elements of the State tort claim in order to prevail under that cause of action.

A commenter had concerns about privacy requirements for banking transactions using telephone relay services. Title IV of the Act provides adequate protections for ensuring the confidentiality of communications using the relay services. This issue is more appropriately addressed by the Federal Communications Commission in its regulation implementing title IV of the Act.

Section 36.104 Definitions

''Act.'' The word ''Act'' is used in the regulation to refer to the Americans with Disabilities Act of 1990, Pub. L. 101–336, which is also referred to as the ''ADA.''

''Commerce.'' The definition of ''commerce'' is identical to the statutory definition provided in section 301(1) of the ADA. It means travel, trade, traffic, commerce, transportation, or communication among the several States, between any foreign country or any territory or possession and any State, or between points in the same State but through another State or foreign country. Commerce is defined in the same manner as in title II of the Civil Rights Act of 1964, which prohibits racial discrimination in public accommodations.

The term ''commerce'' is used in the definition of ''place of public accommodation.'' According to that definition, one of the criteria that an entity must meet before it can be considered a place of public accommodation is that its operations affect commerce. The term ''commerce'' is similarly used in the definition of ''commercial facility.''

The use of the phrase ''operations affect commerce'' applies the full scope of coverage of the Commerce Clause of the Constitution in enforcing the ADA. The Constitution gives Congress broad authority to regulate interstate commerce, including the activities of local business enterprises (e.g., a physician's office, a neighborhood restaurant, a laundromat, or a bakery) that affect interstate commerce through the purchase or sale of products manufactured in other States, or by providing services to individuals from other States. Because of the integrated nature of the national economy, the ADA and this final rule will have extremely broad application.

''Commercial facilities'' are those facilities that are intended for nonresidential use by a private entity and whose operations affect commerce. As explained under §36.401, ''New construction,'' the new construction and alteration requirements of subpart D of the rule apply to all commercial facilities, whether or not they are places of public accommodation. Those commercial facilities that are not places of public accommodation are not subject to the requirements of subparts B and C (e.g., those requirements concerning auxiliary aids and general nondiscrimination provisions).

Congress recognized that the employees within commercial facilities would generally be protected under title I (employment) of the Act. However, as the House Committee on Education and Labor pointed out, ''[t]o the extent that new facilities are built in a manner that make[s] them accessible to all individuals, including potential employees, there will be less of a need for individual employers to engage in reasonable accommodations for particular employees.'' H.R. Rep. No. 485, 101st Cong., 2d Sess., pt. 2, at 117 (1990) [hereinafter ''Education and Labor report'']. While employers of fewer than 15 employees are not covered by title I's employment discrimination provisions, there is no such limitation with respect to new construction covered under title III. Congress chose not to so limit the new construction provisions because of its desire for a uniform requirement of accessibility in new construction, because accessibility can be accomplished easily in the design and construction

stage, and because future expansion of a business or sale or lease of the property to a larger employer or to a business that is a place of public accommodation is always a possibility.

The term ''commercial facilities'' is not intended to be defined by dictionary or common industry definitions. Included in this category are factories, warehouses, office buildings, and other buildings in which employment may occur. The phrase, ''whose operations affect commerce,'' is to be read broadly, to include all types of activities reached under the commerce clause of the Constitution.

Privately operated airports are also included in the category of commercial facilities. They are not, however, places of public accommodation because they are not terminals used for ''specified public transportation.'' (Transportation by aircraft is specifically excluded from the statutory definition of ''specified public transportation.'') Thus, privately operated airports are subject to the new construction and alteration requirements of this rule (subpart D) but not to subparts B and C. (Airports operated by public entities are covered by title II of the Act.) Places of public accommodation located within airports, such as restaurants, shops, lounges, or conference centers, however, are covered by subparts B and C of this part.

The statute's definition of ''commercial facilities'' specifically includes only facilities ''that are intended for nonresidential use'' and specifically exempts those facilities that are covered or expressly exempted from coverage under the Fair Housing Act of 1968, as amended (42 U.S.C. 3601–3631). The interplay between the Fair Housing Act and the ADA with respect to those facilities that are ''places of public accommodation'' was the subject of many comments and is addressed in the preamble discussion of the definition of ''place of public accommodation.''

''Current illegal use of drugs.'' The phrase ''current illegal use of drugs'' is used in §36.209. Its meaning is discussed in the preamble for that section.

''Disability.'' The definition of the term ''disability'' is comparable to the definition of the term ''individual with handicaps'' in section 7(8)(B) of the Rehabilitation Act and section 802(h) of the Fair Housing Act. The Education and Labor Committee report makes clear that the analysis of the term ''individual with handicaps'' by the Department of Health, Education, and Welfare in its regulations implementing section 504 (42 FR 22685 (May 4, 1977)) and the analysis by the Department of Housing and Urban Development in its regulation implementing the Fair Housing Amendments Act of 1988 (54 FR 3232 (Jan. 23, 1989)) should also apply fully to the term ''disability'' (Education and Labor report at 50).

The use of the term ''disability'' instead of ''handicap'' and the term ''individual with a disability'' instead of ''individual with handicaps'' represents an effort by the Congress to make use of up-to-date, currently accepted terminology. The terminology applied to individuals with disabilities is a very significant and sensitive issue. As with racial and ethnic terms, the choice of words to describe a person with a disability is overlaid with stereotypes, patronizing attitudes, and other emotional connotations. Many individuals with disabilities, and organizations representing such individuals, object to the use of such terms as ''handicapped person'' or ''the handicapped.'' In other recent legislation, Congress also recognized this shift in terminology, e.g., by changing the name of the National Council on the Handicapped to the National Council on Disability (Pub. L. 100–630).

In enacting the Americans with Disabilities Act, Congress concluded that it was important for the current legislation to use terminology most in line with the sensibilities of most Americans with disabilities. No change in definition or substance is intended nor should be attributed to this change in phraseology.

The term ''disability'' means, with respect to an individual—

(A) A physical or mental impairment that substantially limits one or more of the major life activities of such individual;

(B) A record of such an impairment; or

(C) Being regarded as having such an impairment.

If an individual meets any one of these three tests, he or she is considered to be an individual with a disability for purposes of coverage under the Americans with Disabilities Act.

Congress adopted this same basic definition of ''disability,'' first used in the Rehabilitation Act of 1973 and in the Fair Housing Amendments Act of 1988, for a number of reasons. It has worked well since it was adopted in 1974. There is a substantial body of administrative interpretation and judicial precedent on this definition. Finally, it would not be possible to guarantee comprehensiveness by providing a list of specific disabilities, especially because new disorders may be recognized in the future, as they have since the definition was first established in 1974.

Test A—A Physical or Mental Impairment That Substantially Limits One or More of the Major Life Activities of Such Individual

Physical or mental impairment. Under the first test, an individual must have a physical or mental impairment. As explained in paragraph (1) (i) of the definition, ''impairment'' means any physiological disorder or condition, cosmetic disfigurement, or anatomical

loss affecting one or more of the following body systems: Neurological; musculoskeletal; special sense organs (including speech organs that are not respiratory, such as vocal cords, soft palate, and tongue); respiratory, including speech organs; cardiovascular; reproductive; digestive; genitourinary; hemic and lymphatic; skin; and endocrine. It also means any mental or psychological disorder, such as mental retardation, organic brain syndrome, emotional or mental illness, and specific learning disabilities. This list closely tracks the one used in the regulations for section 504 of the Rehabilitation Act of 1973 (see, *e.g.*, 45 CFR 84.3(j)(2)(i)).

Many commenters asked that ''traumatic brain injury'' be added to the list in paragraph (1)(i). Traumatic brain injury is already included because it is a physiological condition affecting one of the listed body systems, i.e., ''neurological.'' Therefore, it was unnecessary for the Department to add the term to the regulation.

It is not possible to include a list of all the specific conditions, contagious and noncontagious diseases, or infections that would constitute physical or mental impairments because of the difficulty of ensuring the comprehensiveness of such a list, particularly in light of the fact that other conditions or disorders may be identified in the future. However, the list of examples in paragraph (1)(iii) of the definition includes: Orthopedic, visual, speech and hearing impairments; cerebral palsy; epilepsy, muscular dystrophy, multiple sclerosis, cancer, heart disease, diabetes, mental retardation, emotional illness, specific learning disabilities, HIV disease (symptomatic or asymptomatic), tuberculosis, drug addiction, and alcoholism.

The examples of ''physical or mental impairments'' in paragraph (1)(iii) are the same as those contained in many section 504 regulations, except for the addition of the phrase ''contagious and noncontagious'' to describe the types of diseases and conditions included, and the addition of ''HIV disease (symptomatic or asymptomatic)'' and ''tuberculosis'' to the list of examples. These additions are based on the ADA committee reports, caselaw, and official legal opinions interpreting section 504. In *School Board of Nassau County* v. *Arline*, 480 U.S. 273 (1987), a case involving an individual with tuberculosis, the Supreme Court held that people with contagious diseases are entitled to the protections afforded by section 504. Following the *Arline* decision, this Department's Office of Legal Counsel issued a legal opinion that concluded that symptomatic HIV disease is an impairment that substantially limits a major life activity; therefore it has been included in the definition of disability under this part. The opinion also concluded that asymptomatic HIV disease is an impairment that substantially limits a major life activity, either because of its actual effect on the individual with HIV disease or because the reactions of other people to individuals with HIV disease cause such individuals to be treated as though they are disabled. See Memorandum from Douglas W. Kmiec, Acting Assistant Attorney General, Office of Legal Counsel, Department of Justice, to Arthur B. Culvahouse, Jr., Counsel to the President (Sept. 27, 1988), *reprinted in* Hearings on S. 933, the Americans with Disabilities Act, Before the Subcomm. on the Handicapped of the Senate Comm. on Labor and Human Resources, 101st Cong., 1st Sess. 346 (1989). The phrase ''symptomatic or asymptomatic'' was inserted in the final rule after ''HIV disease'' in response to commenters who suggested that the clarification was necessary to give full meaning to the Department's opinion.

Paragraph (1)(iv) of the definition states that the phrase ''physical or mental impairment'' does not include homosexuality or bisexuality. These conditions were never considered impairments under other Federal disability laws. Section 511(a) of the statute makes clear that they are likewise not to be considered impairments under the Americans with Disabilities Act.

Physical or mental impairment does not include simple physical characteristics, such as blue eyes or black hair. Nor does it include environmental, cultural, economic, or other disadvantages, such as having a prison record, or being poor. Nor is age a disability. Similarly, the definition does not include common personality traits such as poor judgment or a quick temper where these are not symptoms of a mental or psychological disorder. However, a person who has these characteristics and also has a physical or mental impairment may be considered as having a disability for purposes of the Americans with Disabilities Act based on the impairment.

Substantial limitation of a major life activity. Under Test A, the impairment must be one that ''substantially limits a major life activity.'' Major life activities include such things as caring for one's self, performing manual tasks, walking, seeing, hearing, speaking, breathing, learning, and working. For example, a person who is paraplegic is substantially limited in the major life activity of walking, a person who is blind is substantially limited in the major life activity of seeing, and a person who is mentally retarded is substantially limited in the major life activity of learning. A person with traumatic brain injury is substantially limited in the major life activities of caring for one's self, learning, and working because of memory deficit, confusion, contextual difficulties, and inability to reason appropriately.

A person is considered an individual with a disability for purposes of Test A, the first prong of the definition, when the individual's

important life activities are restricted as to the conditions, manner, or duration under which they can be performed in comparison to most people. A person with a minor, trivial impairment, such as a simple infected finger, is not impaired in a major life activity. A person who can walk for 10 miles continuously is not substantially limited in walking merely because, on the eleventh mile, he or she begins to experience pain, because most people would not be able to walk eleven miles without experiencing some discomfort.

The Department received many comments on the proposed rule's inclusion of the word ''temporary'' in the definition of ''disability.'' The preamble indicated that impairments are not necessarily excluded from the definition of ''disability'' simply because they are temporary, but that the duration, or expected duration, of an impairment is one factor that may properly be considered in determining whether the impairment substantially limits a major life activity. The preamble recognized, however, that temporary impairments, such as a broken leg, are not commonly regarded as disabilities, and only in rare circumstances would the degree of the limitation and its expected duration be substantial: Nevertheless, many commenters objected to inclusion of the word ''temporary'' both because it is not in the statute and because it is not contained in the definition of ''disability'' set forth in the title I regulations of the Equal Employment Opportunity Commission (EEOC). The word ''temporary'' has been deleted from the final rule to conform with the statutory language. The question of whether a temporary impairment is a disability must be resolved on a case-by-case basis, taking into consideration both the duration (or expected duration) of the impairment and the extent to which it actually limits a major life activity of the affected individual.

The question of whether a person has a disability should be assessed without regard to the availability of mitigating measures, such as reasonable modifications or auxiliary aids and services. For example, a person with hearing loss is substantially limited in the major life activity of hearing, even though the loss may be improved through the use of a hearing aid. Likewise, persons with impairments, such as epilepsy or diabetes, that substantially limit a major life activity, are covered under the first prong of the definition of disability, even if the effects of the impairment are controlled by medication.

Many commenters asked that environmental illness (also known as multiple chemical sensitivity) as well as allergy to cigarette smoke be recognized as disabilities. The Department, however, declines to state categorically that these types of allergies or sensitivities are disabilities, because the determination as to whether an impairment is a disability depends on whether, given the particular circumstances at issue, the impairment substantially limits one or more major life activities (or has a history of, or is regarded as having such an effect).

Sometimes respiratory or neurological functioning is so severely affected that an individual will satisfy the requirements to be considered disabled under the regulation. Such an individual would be entitled to all of the protections afforded by the Act and this part. In other cases, individuals may be sensitive to environmental elements or to smoke but their sensitivity will not rise to the level needed to constitute a disability. For example, their major life activity of breathing may be somewhat, but not substantially, impaired. In such circumstances, the individuals are not disabled and are not entitled to the protections of the statute despite their sensitivity to environmental agents.

In sum, the determination as to whether allergies to cigarette smoke, or allergies or sensitivities characterized by the commenters as environmental illness are disabilities covered by the regulation must be made using the same case-by-case analysis that is applied to all other physical or mental impairments. Moreover, the addition of specific regulatory provisions relating to environmental illness in the final rule would be inappropriate at this time pending future consideration of the issue by the Architectural and Transportation Barriers Compliance Board, the Environmental Protection Agency, and the Occupational Safety and Health Administration of the Department of Labor.

Test B—A Record of Such an Impairment

This test is intended to cover those who have a record of an impairment. As explained in paragraph (3) of the rule's definition of disability, this includes a person who has a history of an impairment that substantially limited a major life activity, such as someone who has recovered from an impairment. It also includes persons who have been misclassified as having an impairment.

This provision is included in the definition in part to protect individuals who have recovered from a physical or mental impairment that previously substantially limited them in a major life activity. Discrimination on the basis of such a past impairment is prohibited. Frequently occurring examples of the first group (those who have a history of an impairment) are persons with histories of mental or emotional illness, heart disease, or cancer; examples of the second group (those who have been misclassified as having an impairment) are persons who have been misclassified as having mental retardation or mental illness.

Test C—Being Regarded as Having Such an Impairment

This test, as contained in paragraph (4) of the definition, is intended to cover persons who are treated by a private entity or public accommodation as having a physical or mental impairment that substantially limits a major life activity. It applies when a person is treated as if he or she has an impairment that substantially limits a major life activity, regardless of whether that person has an impairment.

The Americans with Disabilities Act uses the same ''regarded as'' test set forth in the regulations implementing section 504 of the Rehabilitation Act. *See, e.g.,* 28 CFR 42.540(k)(2)(iv), which provides:

(iv) ''Is regarded as having an impairment'' means (A) Has a physical or mental impairment that does not substantially limit major life activities but that is treated by a recipient as constituting such a limitation; (B) Has a physical or mental impairment that substantially limits major life activities only as a result of the attitudes of others toward such impairment; or (C) Has none of the impairments defined in paragraph (k)(2)(i) of this section but is treated by a recipient as having such an impairment.

The perception of the private entity or public accommodation is a key element of this test. A person who perceives himself or herself to have an impairment, but does not have an impairment, and is not treated as if he or she has an impairment, is not protected under this test. A person would be covered under this test if a restaurant refused to serve that person because of a fear of ''negative reactions'' of others to that person. A person would also be covered if a public accommodation refused to serve a patron because it perceived that the patron had an impairment that limited his or her enjoyment of the goods or services being offered.

For example, persons with severe burns often encounter discrimination in community activities, resulting in substantial limitation of major life activities. These persons would be covered under this test based on the attitudes of others towards the impairment, even if they did not view themselves as ''impaired.''

The rationale for this third test, as used in the Rehabilitation Act of 1973, was articulated by the Supreme Court in *Arline,* 480 U.S. 273 (1987). The Court noted that, although an individual may have an impairment that does not in fact substantially limit a major life activity, the reaction of others may prove just as disabling. ''Such an impairment might not diminish a person's physical or mental capabilities, but could nevertheless substantially limit that person's ability to work as a result of the negative reactions of others to the impairment.'' *Id.* at 283. The Court concluded that, by including this test in the Rehabilitation Act's definition, ''Congress acknowledged that society's accumulated myths and fears about disability and disease are as handicapping as are the physical limitations that flow from actual impairment.'' *Id.* at 284.

Thus, a person who is not allowed into a public accommodation because of the myths, fears, and stereotypes associated with disabilities would be covered under this third test whether or not the person's physical or mental condition would be considered a disability under the first or second test in the definition.

If a person is refused admittance on the basis of an actual or perceived physical or mental condition, and the public accommodation can articulate no legitimate reason for the refusal (such as failure to meet eligibility criteria), a perceived concern about admitting persons with disabilities could be inferred and the individual would qualify for coverage under the ''regarded as'' test. A person who is covered because of being regarded as having an impairment is not required to show that the public accommodation's perception is inaccurate (e.g., that he will be accepted by others, or that insurance rates will not increase) in order to be admitted to the public accommodation.

Paragraph (5) of the definition lists certain conditions that are not included within the definition of ''disability.'' The excluded conditions are: transvestism, transsexualism, pedophilia, exhibitionism, voyeurism, gender identity disorders not resulting from physical impairments, other sexual behavior disorders, compulsive gambling, kleptomania, pyromania, and psychoactive substance use disorders resulting from current illegal use of drugs. Unlike homosexuality and bisexuality, which are not considered impairments under either the Americans with Disabilities Act (see the definition of ''disability,'' paragraph (1)(iv)) or section 504, the conditions listed in paragraph (5), except for transvestism, are not necessarily excluded as impairments under section 504. (Transvestism was excluded from the definition of disability for section 504 by the Fair Housing Amendments Act of 1988, Pub. L. 100–430, §6(b).) The phrase ''current illegal use of drugs'' used in this definition is explained in the preamble to §36.209.

''Drug.'' The definition of the term ''drug'' is taken from section 510(d)(2) of the ADA.

''Facility.'' ''Facility'' means all or any portion of buildings, structures, sites, complexes, equipment, rolling stock or other conveyances, roads, walks, passageways, parking lots, or other real or personal property, including the site where the building, property, structure, or equipment is located. Committee reports made clear that the definition of facility was drawn from the definition of facility in current Federal regulations (*see, e.g.,* Education and Labor report

at 114). It includes both indoor and outdoor areas where human-constructed improvements, structures, equipment, or property have been added to the natural environment.

The term ''rolling stock or other conveyances'' was not included in the definition of facility in the proposed rule. However, commenters raised questions about the applicability of this part to places of public accommodation operated in mobile facilities (such as cruise ships, floating restaurants, or mobile health units). Those places of public accommodation are covered under this part, and would be included in the definition of ''facility.'' Thus the requirements of subparts B and C would apply to those places of public accommodation. For example, a covered entity could not discriminate on the basis of disability in the full and equal enjoyment of the facilities (§36.201). Similarly, a cruise line could not apply eligibility criteria to potential passengers in a manner that would screen out individuals with disabilities, unless the criteria are ''necessary,'' as provided in §36.301.

However, standards for new construction and alterations of such facilities are not yet included in the Americans with Disabilities Act Accessibility Guidelines for Buildings and Facilities (ADAAG) adopted by §36.406 and incorporated in appendix A. The Department therefore will not interpret the new construction and alterations provisions of subpart D to apply to the types of facilities discussed here, pending further development of specific requirements.

Requirements pertaining to accessible transportation services provided by public accommodations are included in §36.310 of this part; standards pertaining to accessible vehicles will be issued by the Secretary of Transportation pursuant to section 306 of the Act, and will be codified at 49 CFR part 37.

A public accommodation has obligations under this rule with respect to a cruise ship to the extent that its operations are subject to the laws of the United States.

The definition of ''facility'' only includes the site over which the private entity may exercise control or on which a place of public accommodation or a commercial facility is located. It does not include, for example, adjacent roads or walks controlled by a public entity that is not subject to this part. Public entities are subject to the requirements of title II of the Act. The Department's regulation implementing title II, which will be codified at 28 CFR part 35, addresses the obligations of public entities to ensure accessibility by providing curb ramps at pedestrian walkways.

''Illegal use of drugs.'' The definition of ''illegal use of drugs'' is taken from section 510(d)(1) of the Act and clarifies that the term includes the illegal use of one or more drugs.

''Individual with a disability'' means a person who has a disability but does not include an individual who is currently illegally using drugs, when the public accommodation acts on the basis of such use. The phrase ''current illegal use of drugs'' is explained in the preamble to §36.209.

''Place of public accommodation.'' The term ''place of public accommodation'' is an adaptation of the statutory definition of ''public accommodation'' in section 301(7) of the ADA and appears as an element of the regulatory definition of public accommodation. The final rule defines ''place of public accommodation'' as a facility, operated by a private entity, whose operations affect commerce and fall within at least one of 12 specified categories. The term ''public accommodation,'' on the other hand, is reserved by the final rule for the private entity that owns, leases (or leases to), or operates a place of public accommodation. It is the public accommodation, and not the place of public accommodation, that is subject to the regulation's nondiscrimination requirements. Placing the obligation not to discriminate on the public accommodation, as defined in the rule, is consistent with section 302(a) of the ADA, which places the obligation not to discriminate on any person who owns, leases (or leases to), or operates a place of public accommodation.

Facilities operated by government agencies or other public entities as defined in this section do not qualify as places of public accommodation. The actions of public entities are governed by title II of the ADA and will be subject to regulations issued by the Department of Justice under that title. The receipt of government assistance by a private entity does not by itself preclude a facility from being considered as a place of public accommodation.

The definition of place of public accommodation incorporates the 12 categories of facilities represented in the statutory definition of public accommodation in section 301(7) of the ADA:

1. Places of lodging.
2. Establishments serving food or drink.
3. Places of exhibition or entertainment.
4. Places of public gathering.
5. Sales or rental establishments.
6. Service establishments.
7. Stations used for specified public transportation.
8. Places of public display or collection.
9. Places of recreation.
10. Places of education.
11. Social service center establishments.
12. Places of exercise or recreation.

In order to be a place of public accommodation, a facility must be operated by a private entity, its operations must affect commerce, and it must fall within one of these 12

categories. While the list of categories is exhaustive, the representative examples of facilities within each category are not. Within each category only a few examples are given. The category of social service center establishments would include not only the types of establishments listed, day care centers, senior citizen centers, homeless shelters, food banks, adoption agencies, but also establishments such as substance abuse treatment centers, rape crisis centers, and halfway houses. As another example, the category of sales or rental establishments would include an innumerable array of facilities that would sweep far beyond the few examples given in the regulation. For example, other retail or wholesale establishments selling or renting items, such as bookstores, videotape rental stores, car rental establishment, pet stores, and jewelry stores would also be covered under this category, even though they are not specifically listed.

Several commenters requested clarification as to the coverage of wholesale establishments under the category of ''sales or rental establishments.'' The Department intends for wholesale establishments to be covered under this category as places of public accommodation except in cases where they sell exclusively to other businesses and not to individuals. For example, a company that grows food produce and supplies its crops exclusively to food processing corporations on a wholesale basis does not become a public accommodation because of these transactions. If this company operates a road side stand where its crops are sold to the public, the road side stand would be a sales establishment covered by the ADA. Conversely, a sales establishment that markets its goods as ''wholesale to the public'' and sells to individuals would not be exempt from ADA coverage despite its use of the word ''wholesale'' as a marketing technique.

Of course, a company that operates a place of public accommodation is subject to this part only in the operation of that place of public accommodation. In the example given above, the wholesale produce company that operates a road side stand would be a public accommodation only for the purposes of the operation of that stand. The company would be prohibited from discriminating on the basis of disability in the operation of the road side stand, and it would be required to remove barriers to physical access to the extent that it is readily achievable to do so (see §36.304); however, in the event that it is not readily achievable to remove barriers, for example, by replacing a gravel surface or regrading the area around the stand to permit access by persons with mobility impairments, the company could meet its obligations through alternative methods of making its goods available, such as delivering produce to a customer in his or her car (see §36.305). The concepts of readily achievable barrier removal and alternatives to barrier removal are discussed further in the preamble discussion of §§36.304 and 36.305.

Even if a facility does not fall within one of the 12 categories, and therefore does not qualify as a place of public accommodation, it still may be a commercial facility as defined in §36.104 and be subject to the new construction and alterations requirements of subpart D.

A number of commenters questioned the treatment of residential hotels and other residential facilities in the Department's proposed rule. These commenters were essentially seeking resolution of the relationship between the Fair Housing Act and the ADA concerning facilities that are both residential in nature and engage in activities that would cause them to be classified as ''places of public accommodation'' under the ADA. The ADA's express exemption relating to the Fair Housing Act applies only to ''commercial facilities'' and not to ''places of public accommodation.''

A facility whose operations affect interstate commerce is a place of public accommodation for purposes of the ADA to the extent that its operations include those types of activities engaged in or services provided by the facilities contained on the list of 12 categories in section 301(7) of the ADA. Thus, a facility that provides social services would be considered a ''social service center establishment.'' Similarly, the category ''places of lodging'' would exclude solely residential facilities because the nature of a place of lodging contemplates the use of the facility for short-term stays.

Many facilities, however, are mixed use facilities. For example, in a large hotel that has a separate residential apartment wing, the residential wing would not be covered by the ADA because of the nature of the occupancy of that part of the facility. This residential wing would, however, be covered by the Fair Housing Act. The separate nonresidential accommodations in the rest of the hotel would be a place of lodging, and thus a public accommodation subject to the requirements of this final rule. If a hotel allows both residential and short-term stays, but does not allocate space for these different uses in separate, discrete units, both the ADA and the Fair Housing Act may apply to the facility. Such determinations will need to be made on a case-by-case basis. Any place of lodging of the type described in paragraph (1) of the definition of place of public accommodation and that is an establishment located within a building that contains not more than five rooms for rent or hire and is actually occupied by the proprietor of the establishment as his or her residence is not covered by the ADA. (This exclusion from coverage does not apply to other categories of public accommodations, for example, professional offices or homeless

shelters, that are located in a building that is also occupied as a private residence.)

A number of commenters noted that the term ''residential hotel'' may also apply to a type of hotel commonly known as a ''single room occupancy hotel.'' Although such hotels or portions of such hotels may fall under the Fair Housing Act when operated or used as long-term residences, they are also considered ''places of lodging'' under the ADA when guests of such hotels are free to use them on a short-term basis. In addition, ''single room occupancy hotels'' may provide social services to their guests, often through the operation of Federal or State grant programs. In such a situation, the facility would be considered a ''social service center establishment'' and thus covered by the ADA as a place of public accommodation, regardless of the length of stay of the occupants.

A similar analysis would also be applied to other residential facilities that provide social services, including homeless shelters, shelters for people seeking refuge from domestic violence, nursing homes, residential care facilities, and other facilities where persons may reside for varying lengths of time. Such facilities should be analyzed under the Fair Housing Act to determine the application of that statute. The ADA, however, requires a separate and independent analysis. For example, if the facility, or a portion of the facility, is intended for or permits short-term stays, or if it can appropriately be categorized as a service establishment or as a social service establishment, then the facility or that portion of the facility used for the covered purpose is a place of public accommodation under the ADA. For example, a homeless shelter that is intended and used only for long-term residential stays and that does not provide social services to its residents would not be covered as a place of public accommodation. However, if this facility permitted short-term stays or provided social services to its residents, it would be covered under the ADA either as a ''place of lodging'' or as a ''social service center establishment,'' or as both.

A private home, by itself, does not fall within any of the 12 categories. However, it can be covered as a place of public accommodation to the extent that it is used as a facility that would fall within one of the 12 categories. For example, if a professional office of a dentist, doctor, or psychologist is located in a private home, the portion of the home dedicated to office use (including areas used both for the residence and the office, e.g., the entrance to the home that is also used as the entrance to the professional office) would be considered a place of public accommodation. Places of public accommodation located in residential facilities are specifically addressed in §36.207.

If a tour of a commercial facility that is not otherwise a place of public accommodation, such as, for example, a factory or a movie studio production set, is open to the general public, the route followed by the tour is a place of public accommodation and the tour must be operated in accordance with the rule's requirements for public accommodations. The place of public accommodation defined by the tour does not include those portions of the commercial facility that are merely viewed from the tour route. Hence, the barrier removal requirements of §36.304 only apply to the physical route followed by the tour participants and not to work stations or other areas that are merely adjacent to, or within view of, the tour route. If the tour is not open to the general public, but rather is conducted, for example, for selected business colleagues, partners, customers, or consultants, the tour route is not a place of public accommodation and the tour is not subject to the requirements for public accommodations.

Public accommodations that receive Federal financial assistance are subject to the requirements of section 504 of the Rehabilitation Act as well as the requirements of the ADA.

Private schools, including elementary and secondary schools, are covered by the rule as places of public accommodation. The rule itself, however, does not require a private school to provide a free appropriate education or develop an individualized education program in accordance with regulations of the Department of Education implementing section 504 of the Rehabilitation Act of 1973, as amended (34 CFR part 104), and regulations implementing the Individuals with Disabilities Education Act (34 CFR part 300). The receipt of Federal assistance by a private school, however, would trigger application of the Department of Education's regulations to the extent mandated by the particular type of assistance received.

''Private club.'' The term ''private club'' is defined in accordance with section 307 of the ADA as a private club or establishment exempted from coverage under title II of the Civil Rights Act of 1964. Title II of the 1964 Act exempts any ''private club or other establishment not in fact open to the public, except to the extent that the facilities of such establishment are made available to the customers or patrons of [a place of public accommodation as defined in title II].'' The rule, therefore, as reflected in §36.102(e) of the application section, limits the coverage of private clubs accordingly. The obligations of a private club that rents space to any other private entity for the operation of a place of public accommodation are discussed further in connection with §36.201.

In determining whether a private entity qualifies as a private club under title II, courts have considered such factors as the degree of member control of club operations, the selectivity of the membership selection

process, whether substantial membership fees are charged, whether the entity is operated on a nonprofit basis, the extent to which the facilities are open to the public, the degree of public funding, and whether the club was created specifically to avoid compliance with the Civil Rights Act. See *e.g.*, *Tillman* v. *Wheaton-Haven Recreation Ass'n*, 410 U.S. 431 (1973); *Daniel* v. *Paul*, 395 U.S. 298 (1969); *Olzman* v. *Lake Hills Swim Club, Inc.*, 495 F.2d 1333 (2d Cir. 1974); *Anderson* v. *Pass Christian Isles Golf Club, Inc.*, 488 F.2d 855 (5th Cir. 1974); *Smith* v. *YMCA*, 462 F.2d 634 (5th Cir. 1972); *Stout* v. *YMCA*, 404 F.2d 687 (5th Cir. 1968); *United States* v. *Richberg*, 398 F.2d 523 (5th Cir. 1968); *Nesmith* v. *YMCA*, 397 F.2d 96 (4th Cir. 1968); *United States* v. *Lansdowne Swim Club*, 713 F. Supp. 785 (E.D. Pa. 1989); *Durham* v. *Red Lake Fishing and Hunting Club, Inc.*, 666 F. Supp. 954 (W.D. Tex. 1987); *New York* v. *Ocean Club, Inc.*, 602 F. Supp. 489 (E.D.N.Y. 1984); *Brown* v. *Loudoun Golf and Country Club, Inc.*, 573 F. Supp. 399 (E.D. Va. 1983); *United States* v. *Trustees of Fraternal Order of Eagles*, 472 F. Supp. 1174 (E.D. Wis. 1979); *Cornelius* v. *Benevolent Protective Order of Elks*, 382 F. Supp. 1182 (D. Conn. 1974).

''Private entity.'' The term ''private entity'' is defined as any individual or entity other than a public entity. It is used as part of the definition of ''public accommodation'' in this section.

The definition adds ''individual'' to the statutory definition of private entity (see section 301(6) of the ADA). This addition clarifies that an individual may be a private entity and, therefore, may be considered a public accommodation if he or she owns, leases (or leases to), or operates a place of public accommodation. The explicit inclusion of individuals under the definition of private entity is consistent with section 302(a) of the ADA, which broadly prohibits discrimination on the basis of disability by any person who owns, leases (or leases to), or operates a place of public accommodation.

''Public accommodation.'' The term ''public accommodation'' means a private entity that owns, leases (or leases to), or operates a place of public accommodation. The regulatory term, ''public accommodation,'' corresponds to the statutory term, ''person,'' in section 302(a) of the ADA. The ADA prohibits discrimination ''by any person who owns, leases (or leases to), or operates a place of public accommodation.'' The text of the regulation consequently places the ADA's nondiscrimination obligations on ''public accommodations'' rather than on ''persons'' or on ''places of public accommodation.''

As stated in §36.102(b)(2), the requirements of subparts B and C obligate a public accommodation only with respect to the operations of a place of public accommodation. A public accommodation must also meet the requirements of subpart D with respect to facilities used as, or designed or constructed for use as, places of public accommodation or commercial facilities.

''Public entity.'' The term ''public entity'' is defined in accordance with section 201(1) of the ADA as any State or local government; any department, agency, special purpose district, or other instrumentality of a State or States or local government; and the National Railroad Passenger Corporation, and any commuter authority (as defined in section 103(8) of the Rail Passenger Service Act). It is used in the definition of ''private entity'' in §36.104. Public entities are excluded from the definition of private entity and therefore cannot qualify as public accommodations under this regulation. However, the actions of public entities are covered by title II of the ADA and by the Department's title II regulations codified at 28 CFR part 35.

''Qualified interpreter.'' The Department received substantial comment regarding the lack of a definition of ''qualified interpreter.'' The proposed rule defined auxiliary aids and services to include the statutory term, ''qualified interpreters'' (§36.303(b)), but did not define that term. Section 36.303 requires the use of a qualified interpreter where necessary to achieve effective communication, unless an undue burden or fundamental alteration would result. Commenters stated that a lack of guidance on what the term means would create confusion among those trying to secure interpreting services and often result in less than effective communication.

Many commenters were concerned that, without clear guidance on the issue of ''qualified'' interpreter, the rule would be interpreted to mean ''available, rather than qualified'' interpreters. Some claimed that few public accommodations would understand the difference between a qualified interpreter and a person who simply knows a few signs or how to fingerspell.

In order to clarify what is meant by ''qualified interpreter'' the Department has added a definition of the term to the final rule. A qualified interpreter means an interpreter who is able to interpret effectively, accurately, and impartially both receptively and expressively, using any necessary specialized vocabulary. This definition focuses on the actual ability of the interpreter in a particular interpreting context to facilitate effective communication between the public accommodation and the individual with disabilities.

Public comment also revealed that public accommodations have at times asked persons who are deaf to provide family members or friends to interpret. In certain circumstances, notwithstanding that the family member or friend is able to interpret or is a certified interpreter, the family member or friend may not be qualified to render the necessary interpretation because of factors such as emotional or personal involvement

or considerations of confidentiality that may adversely affect the ability to interpret ''effectively, accurately, and impartially.''

''Readily achievable.'' The definition of ''readily achievable'' follows the statutory definition of that term in section 301(9) of the ADA. Readily achievable means easily accomplishable and able to be carried out without much difficulty or expense. The term is used as a limitation on the obligation to remove barriers under §§36.304(a), 36.305(a), 36.308(a), and 36.310(b). Further discussion of the meaning and application of the term ''readily achievable'' may be found in the preamble section for §36.304.

The definition lists factors to be considered in determining whether barrier removal is readily achievable in any particular circumstance. A significant number of commenters objected to §36.306 of the proposed rule, which listed identical factors to be considered for determining ''readily achievable'' and ''undue burden'' together in one section. They asserted that providing a consolidated section blurred the distinction between the level of effort required by a public accommodation under the two standards. The readily achievable standard is a ''lower'' standard than the ''undue burden'' standard in terms of the level of effort required, but the factors used in determining whether an action is readily achievable or would result in an undue burden are identical (See Education and Labor report at 109). Although the preamble to the proposed rule clearly delineated the relationship between the two standards, to eliminate any confusion the Department has deleted §36.306 of the proposed rule. That section, in any event, as other commenters noted, had merely repeated the lists of factors contained in the definitions of readily achievable and undue burden.

The list of factors included in the definition is derived from section 301(9) of the ADA. It reflects the congressional intention that a wide range of factors be considered in determining whether an action is readily achievable. It also takes into account that many local facilities are owned or operated by parent corporations or entities that conduct operations at many different sites. This section makes clear that, in some instances, resources beyond those of the local facility where the barrier must be removed may be relevant in determining whether an action is readily achievable. One must also evaluate the degree to which any parent entity has resources that may be allocated to the local facility.

The statutory list of factors in section 301(9) of the Act uses the term ''covered entity'' to refer to the larger entity of which a particular facility may be a part. ''Covered entity'' is not a defined term in the ADA and is not used consistently throughout the Act. The definition, therefore, substitutes the term ''parent entity'' in place of ''covered entity'' in paragraphs (3), (4), and (5) when referring to the larger private entity whose overall resources may be taken into account. This usage is consistent with the House Judiciary Committee's use of the term ''parent company'' to describe the larger entity of which the local facility is a part (H.R. Rep. No. 485, 101st Cong., 2d Sess., pt. 3, at 40–41, 54–55 (1990) (hereinafter ''Judiciary report'')).

A number of commenters asked for more specific guidance as to when and how the resources of a parent corporation or entity are to be taken into account in determining what is readily achievable. The Department believes that this complex issue is most appropriately resolved on a case-by-case basis. As the comments reflect, there is a wide variety of possible relationships between the site in question and any parent corporation or other entity. It would be unwise to posit legal ramifications under the ADA of even generic relationships (e.g., banks involved in foreclosures or insurance companies operating as trustees or in other similar fiduciary relationships), because any analysis will depend so completely on the detailed fact situations and the exact nature of the legal relationships involved. The final rule does, however, reorder the factors to be considered. This shift and the addition of the phrase ''if applicable'' make clear that the line of inquiry concerning factors will start at the site involved in the action itself. This change emphasizes that the overall resources, size, and operations of the parent corporation or entity should be considered to the extent appropriate in light of ''the geographic separateness, and the administrative or fiscal relationship of the site or sites in question to any parent corporation or entity.''

Although some commenters sought more specific numerical guidance on the definition of readily achievable, the Department has declined to establish in the final rule any kind of numerical formula for determining whether an action is readily achievable. It would be difficult to devise a specific ceiling on compliance costs that would take into account the vast diversity of enterprises covered by the ADA's public accommodations requirements and the economic situation that any particular entity would find itself in at any moment. The final rule, therefore, implements the flexible case-by-case approach chosen by Congress.

A number of commenters requested that security considerations be explicitly recognized as a factor in determining whether a barrier removal action is readily achievable. The Department believes that legitimate safety requirements, including crime prevention measures, may be taken into account so long as they are based on actual risks and are necessary for safe operation of the public accommodation. This point has been included in the definition.

Some commenters urged the Department not to consider acts of barrier removal in complete isolation from each other in determining whether they are readily achievable. The Department believes that it is appropriate to consider the cost of other barrier removal actions as one factor in determining whether a measure is readily achievable.

''Religious entity.'' The term ''religious entity'' is defined in accordance with section 307 of the ADA as a religious organization or entity controlled by a religious organization, including a place of worship. Section 36.102(e) of the rule states that the rule does not apply to any religious entity.

The ADA's exemption of religious organizations and religious entities controlled by religious organizations is very broad, encompassing a wide variety of situations. Religious organizations and entities controlled by religious organizations have no obligations under the ADA. Even when a religious organization carries out activities that would othervise make it a public accommodation, the religious organization is exempt from ADA coverage. Thus, if a church itself operates a day care center, a nursing home, a private school, or a diocesan school system, the operations of the center, home, school, or schools would not be subject to the requirements of the ADA or this part. The religious entity would not lose its exemption merely because the services provided were open to the general public. The test is whether the church or other religious organization operates the public accommodation, not which individuals receive the public accommodation's services.

Religious entities that are controlled by religious organizations are also exempt from the ADA's requirements. Many religious organizations in the United States use lay boards and other secular or corporate mechanisms to operate schools and an array of social services. The use of a lay board or other mechanism does not itself remove the ADA's religious exemption. Thus, a parochial school, having religious doctrine in its curriculum and sponsored by a religious order, could be exempt either as a religious organization or as an entity controlled by a religious organization, even if it has a lay board. The test remains a factual one—whether the church or other religious organization controls the operations of the school or of the service or whether the school or service is itself a religious organization.

Although a religious organization or a religious entity that is controlled by a religious organization has no obligations under the rule, a public accommodation that is not itself a religious organization, but that operates a place of public accommodation in leased space on the property of a religious entity, which is not a place of worship, is subject to the rule's requirements if it is not under control of a religious organization. When a church rents meeting space, which is not a place of worship, to a local community group or to a private, independent day care center, the ADA applies to the activities of the local community group and day care center if a lease exists and consideration is paid.

''Service animal.'' The term ''service animal'' encompasses any guide dog, signal dog, or other animal individually trained to provide assistance to an individual with a disability. The term is used in §36.302(c), which requires public accommodations generally to modify policies, practices, and procedures to accommodate the use of service animals in places of public accommodation.

''Specified public transportation.'' The definition of ''specified public transportation'' is identical to the statutory definition in section 301(10) of the ADA. The term means transportation by bus, rail, or any other conveyance (other than by aircraft) that provides the general public with general or special service (including charter service) on a regular and continuing basis. It is used in category (7) of the definition of ''place of public accommodation,'' which includes stations used for specified public transportation.

The effect of this definition, which excludes transportation by aircraft, is that it excludes privately operated airports from coverage as places of public accommodation. However, places of public accommodation located within airports would be covered by this part. Airports that are operated by public entities are covered by title II of the ADA and, if they are operated as part of a program receiving Federal financial assistance, by section 504 of the Rehabilitation Act. Privately operated airports are similarly covered by section 504 if they are operated as part of a program receiving Federal financial assistance. The operations of any portion of any airport that are under the control of an air carrier are covered by the Air Carrier Access Act. In addition, airports are covered as commercial facilities under this rule.

''State.'' The definition of ''State'' is identical to the statutory definition in section 3(3) of the ADA. The term is used in the definitions of ''commerce'' and ''public entity'' in §36.104.

''Undue burden.'' The definition of ''undue burden'' is analogous to the statutory definition of ''undue hardship'' in employment under section 101(10) of the ADA. The term undue burden means ''significant difficulty or expense'' and serves as a limitation on the obligation to provide auxiliary aids and services under §36.303 and §§36.309 (b)(3) and (c)(3). Further discussion of the meaning and application of the term undue burden may be found in the preamble discussion of §36.303.

The definition lists factors considered in determining whether provision of an auxiliary aid or service in any particular circumstance would result in an undue burden.

The factors to be considered in determining whether an action would result in an undue burden are identical to those to be considered in determining whether an action is readily achievable. However, ''readily achievable'' is a lower standard than ''undue burden'' in that it requires a lower level of effort on the part of the public accommodation (see Education and Labor report at 109).

Further analysis of the factors to be considered in determining undue burden may be found in the preamble discussion of the definition of the term ''readily achievable.''

Subpart B—General Requirements

Subpart B includes general prohibitions restricting a public accommodation from discriminating against people with disabilities by denying them the opportunity to benefit from goods or services, by giving them unequal goods or services, or by giving them different or separate goods or services. These general prohibitions are patterned after the basic, general prohibitions that exist in other civil rights laws that prohibit discrimination on the basis of race, sex, color, religion, or national origin.

Section 36.201 General

Section 36.201(a) contains the general rule that prohibits discrimination on the basis of disability in the full and equal enjoyment of goods, services, facilities, privileges, advantages, and accommodations of any place of public accommodation.

Full and equal enjoyment means the right to participate and to have an equal opportunity to obtain the same results as others to the extent possible with such accommodations as may be required by the Act and these regulations. It does not mean that an individual with a disability must achieve an identical result or level of achievement as persons without a disability. For example, an exercise class cannot exclude a person who uses a wheelchair because he or she cannot do all of the exercises and derive the same result from the class as persons without a disability.

Section 302(a) of the ADA states that the prohibition against discrimination applies to ''any person who owns, leases (or leases to), or operates a place of public accommodation,'' and this language is reflected in §36.201(a). The coverage is quite extensive and would include sublessees, management companies, and any other entity that owns, leases, leases to, or operates a place of public accommodation, even if the operation is only for a short time.

The first sentence of paragraph (b) of §36.201 reiterates the general principle that both the landlord that owns the building that houses the place of public accommodation, as well as the tenant that owns or operates the place of public accommodation, are public accommodations subject to the requirements of this part. Although the statutory language could be interpreted as placing equal responsibility on all private entities, whether lessor, lessee, or operator of a public accommodation, the committee reports suggest that liability may be allocated. Section 36.201(b) of that section of the proposed rule attempted to allocate liability in the regulation itself. Paragraph (b)(2) of that section made a specific allocation of liability for the obligation to take readily achievable measures to remove barriers, and paragraph (b)(3) made a specific allocation for the obligation to provide auxiliary aids.

Numerous commenters pointed out that these allocations would not apply in all situations. Some asserted that paragraph (b)(2) of the proposed rule only addressed the situation when a lease gave the tenant the right to make alterations with permission of the landlord, but failed to address other types of leases, e.g., those that are silent on the right to make alterations, or those in which the landlord is not permitted to enter a tenant's premises to make alterations. Several commenters noted that many leases contain other clauses more relevant to the ADA than the alterations clause. For example, many leases contain a ''compliance clause,'' a clause which allocates responsibility to a particular party for compliance with all relevant Federal, State, and local laws. Many commenters pointed out various types of relationships that were left unaddressed by the regulation, e.g., sale and leaseback arrangements where the landlord is a financial institution with no control or responsibility for the building; franchises; subleases; and management companies which, at least in the hotel industry, often have control over operations but are unable to make modifications to the premises.

Some commenters raised specific questions as to how the barrier removal allocation would work as a practical matter. Paragraph (b)(2) of the proposed rule provided that the burden of making readily achievable modifications within the tenant's place of public accommodation would shift to the landlord when the modifications were not readily achievable for the tenant or when the landlord denied a tenant's request for permission to make such modifications. Commenters noted that the rule did not specify exactly when the burden would actually shift from tenant to landlord and whether the landlord would have to accept a tenant's word that a particular action is not readily achievable. Others questioned if the tenant should be obligated to use alternative methods of barrier removal before the burden shifts. In light of the fact that readily achievable removal of barriers can include such actions as moving of racks and displays, some commenters doubted the appropriateness of requiring a

landlord to become involved in day-to-day operations of its tenants' businesses.

The Department received widely differing comments in response to the preamble question asking whether landlord and tenant obligations should vary depending on the length of time remaining on an existing lease. Many suggested that tenants should have no responsibilities in ''shorter leases,'' which commenters defined as ranging anywhere from 90 days to three years. Other commenters pointed out that the time remaining on the lease should not be a factor in the rule's allocation of responsibilities, but is relevant in determining what is readily achievable for the tenant. The Department agrees with this latter approach and will interpret the rule in that manner.

In recognition of the somewhat limited applicability of the allocation scheme contained in the proposed rule, paragraphs (b)(2) and (b)(3) have been deleted from the final rule. The Department has substituted instead a statement that allocation of responsibility as between the parties for taking readily achievable measures to remove barriers and to provide auxiliary aids and services both in common areas and within places of public accommodation may be determined by the lease or other contractual relationships between the parties. The ADA was not intended to change existing landlord/tenant responsibilities as set forth in the lease. By deleting specific provisions from the rule, the Department gives full recognition to this principle. As between the landlord and tenant, the extent of responsibility for particular obligations may be, and in many cases probably will be, determined by contract.

The suggested allocation of responsibilities contained in the proposed rule may be used if appropriate in a particular situation. Thus, the landlord would generally be held responsible for making readily achievable changes and providing auxiliary aids and services in common areas and for modifying policies, practices, or procedures applicable to all tenants, and the tenant would generally be responsible for readily achievable changes, provision of auxiliary aids, and modification of policies within its own place of public accommodation.

Many commenters objected to the proposed rule's allocation of responsibility for providing auxiliary aids and services solely to the tenant, pointing out that this exclusive allocation may not be appropriate in the case of larger public accommodations that operate their businesses by renting space out to smaller public accommodations. For example, large theaters often rent to smaller traveling companies and hospitals often rely on independent contractors to provide childbirth classes. Groups representing persons with disabilities objected to the proposed rule because, in their view, it permitted the large theater or hospital to evade ADA responsibilities by leasing to independent smaller entities. They suggested that these types of public accommodations are not really landlords because they are in the business of providing a service, rather than renting space, as in the case of a shopping center or office building landlord. These commenters believed that responsibility for providing auxiliary aids should shift to the landlord, if the landlord relies on a smaller public accommodation or independent contractor to provide services closely related to those of the larger public accommodation, and if the needed auxiliary aids prove to be an undue burden for the smaller public accommodation. The final rule no longer lists specific allocations to specific parties but, rather, leaves allocation of responsibilities to the lease negotiations. Parties are, therefore, free to allocate the responsibility for auxiliary aids.

Section 36.201(b)(4) of the proposed rule, which provided that alterations by a tenant on its own premises do not trigger a path of travel obligation on the landlord, has been moved to § 36.403(d) of the final rule.

An entity that is not in and of itself a public accommodation, such as a trade association or performing artist, may become a public accommodation when it leases space for a conference or performance at a hotel, convention center, or stadium. For an entity to become a public accommodation when it is the lessee of space, however, the Department believes that consideration in some form must be given. Thus, a Boy Scout troop that accepts donated space does not become a public accommodation because the troop has not ''leased'' space, as required by the ADA.

As a public accommodation, the trade association or performing artist will be responsible for compliance with this part. Specific responsibilities should be allocated by contract, but, generally, the lessee should be responsible for providing auxiliary aids and services (which could include interpreters, Braille programs, etc.) for the participants in its conference or performance as well as for assuring that displays are accessible to individuals with disabilities.

Some commenters suggested that the rule should allocate responsibilities for areas other than removal of barriers and auxiliary aids. The final rule leaves allocation of all areas to the lease negotiations. However, in general landlords should not be given responsibility for policies a tenant applies in operating its business, if such policies are solely those of the tenant. Thus, if a restaurant tenant discriminates by refusing to seat a patron, it would be the tenant, and not the landlord, who would be responsible, because the discriminatory policy is imposed solely by the tenant and not by the landlord. If, however, a tenant refuses to modify a ''no

pets'' rule to allow service animals in its restaurant because the landlord mandates such a rule, then both the landlord and the tenant would be liable for violation of the ADA when a person with a service dog is refused entrance. The Department wishes to emphasize, however, that the parties are free to allocate responsibilities in any way they choose.

Private clubs are also exempt from the ADA. However, consistent with title II of the Civil Rights Act (42 U.S.C. 2000a(e), a private club is considered a public accommodation to the extent that ''the facilities of such establishment are made available to the customers or patrons'' of a place of public accommodation. Thus, if a private club runs a day care center that is open exclusively to its own members, the club, like the church in the example above, would have no responsibility for compliance with the ADA. Nor would the day care center have any responsibilities because it is part of the private club exempt from the ADA.

On the other hand, if the private club rents to a day care center that is open to the public, then the private club would have the same obligations as any other public accommodation that functions as a landlord with respect to compliance with title III within the day care center. In such a situation, both the private club that ''leases to'' a public accommodation and the public accommodation lessee (the day care center) would be subject to the ADA. This same principle would apply if the private club were to rent to, for example, a bar association, which is not generally a public accommodation but which, as explained above, becomes a public accommodation when it leases space for a conference.

Section 36.202 Activities

Section 36.202 sets out the general forms of discrimination prohibited by title III of the ADA. These general prohibitions are further refined by the specific prohibitions in subpart C. Section 36.213 makes clear that the limitations on the ADA's requirements contained in subpart C, such as ''necessity'' (§36.301(a)) and ''safety'' (§36.301(b)), are applicable to the prohibitions in §36.202. Thus, it is unnecessary to add these limitations to §36.202 as has been requested by some commenters. In addition, the language of §36.202 very closely tracks the language of section 302(b)(1)(A) of the Act, and that statutory provision does not expressly contain these limitations.

Deny participation—Section 36.202(a) provides that it is discriminatory to deny a person with a disability the right to participate in or benefit from the goods, services, facilities, privileges, advantages, or accommodations of a place of public accommodation.

A public accommodation may not exclude persons with disabilities on the basis of disability for reasons other than those specifically set forth in this part. For example, a public accommodation cannot refuse to serve a person with a disability because its insurance company conditions coverage or rates on the absence of persons with disabilities. This is a frequent basis of exclusion from a variety of community activities and is prohibited by this part.

Unequal benefit—Section 36.202(b) prohibits services or accommodations that are not equal to those provided others. For example, persons with disabilities must not be limited to certain performances at a theater.

Separate benefit—Section 36.202(c) permits different or separate benefits or services only when necessary to provide persons with disabilities opportunities as effective as those provided others. This paragraph permitting separate benefits ''when necessary'' should be read together with §36.203(a), which requires integration in ''the most integrated setting appropriate to the needs of the individual.'' The preamble to that section provides further guidance on separate programs. Thus, this section would not prohibit the designation of parking spaces for persons with disabilities.

Each of the three paragraphs (a)–(c) prohibits discrimination against an individual or class of individuals ''either directly or through contractual, licensing, or other arrangements.'' The intent of the contractual prohibitions of these paragraphs is to prohibit a public accommodation from doing indirectly, through a contractual relationship, what it may not do directly. Thus, the ''individual or class of individuals'' referenced in the three paragraphs is intended to refer to the clients and customers of the public accommodation that entered into a contractual arrangement. It is not intended to encompass the clients or customers of other entities. A public accommodation, therefore, is not liable under this provision for discrimination that may be practiced by those with whom it has a contractual relationship, when that discrimination is not directed against its own clients or customers. For example, if an amusement park contracts with a food service company to operate its restaurants at the park, the amusement park is not responsible for other operations of the food service company that do not involve clients or customers of the amusement park. Section 36.202(d) makes this clear by providing that the term ''individual or class of individuals'' refers to the clients or customers of the public accommodation that enters into the contractual, licensing, or other arrangement.

Section 36.203 Integrated Settings

Section 36.203 addresses the integration of persons with disabilities. The ADA recognizes that the provision of goods and services in an integrated manner is a fundamental tenet of nondiscrimination on the basis of

disability. Providing segregated accommodations and services relegates persons with disabilities to the status of second-class citizens. For example, it would be a violation of this provision to require persons with mental disabilities to eat in the back room of a restaurant or to refuse to allow a person with a disability the full use of a health spa because of stereotypes about the person's ability to participate. Section 36.203(a) states that a public accommodation shall afford goods, services, facilities, privileges, advantages, and accommodations to an individual with a disability in the most integrated setting appropriate to the needs of the individual. Section 36.203(b) specifies that, notwithstanding the existence of separate or different programs or activities provided in accordance with this section, an individual with a disability shall not be denied the opportunity to participate in such programs or activities that are not separate or different. Section 306.203(c), which is derived from section 501(d) of the Americans with Disabilities Act, states that nothing in this part shall be construed to require an individual with a disability to accept an accommodation, aid, service, opportunity, or benefit that he or she chooses not to accept.

Taken together, these provisions are intended to prohibit exclusion and segregation of individuals with disabilities and the denial of equal opportunities enjoyed by others, based on, among other things, presumptions, patronizing attitudes, fears, and stereotypes about individuals with disabilities. Consistent with these standards, public accommodations are required to make decisions based on facts applicable to individuals and not on the basis of presumptions as to what a class of individuals with disabilities can or cannot do.

Sections 36.203 (b) and (c) make clear that individuals with disabilities cannot be denied the opportunity to participate in programs that are not separate or different. This is an important and overarching principle of the Americans with Disabilities Act. Separate, special, or different programs that are designed to provide a benefit to persons with disabilities cannot be used to restrict the participation of persons with disabilities in general, integrated activities.

For example, a person who is blind may wish to decline participating in a special museum tour that allows persons to touch sculptures in an exhibit and instead tour the exhibit at his or her own pace with the museum's recorded tour. It is not the intent of this section to require the person who is blind to avail himself or herself of the special tour. Modified participation for persons with disabilities must be a choice, not a requirement.

Further, it would not be a violation of this section for an establishment to offer recreational programs specially designed for children with mobility impairments in those limited circumstances. However, it would be a violation of this section if the entity then excluded these children from other recreational services made available to nondisabled children, or required children with disabilities to attend only designated programs.

Many commenters asked that the Department clarify a public accommodation's obligations within the integrated program when it offers a separate program, but an individual with a disability chooses not to participate in the separate program. It is impossible to make a blanket statement as to what level of auxiliary aids or modifications are required in the integrated program. Rather, each situation must be assessed individually. Assuming the integrated program would be appropriate for a particular individual, the extent to which that individual must be provided with modifications will depend not only on what the individual needs but also on the limitations set forth in subpart C. For example, it may constitute an undue burden for a particular public accommodation, which provides a full-time interpreter in its special guided tour for individuals with hearing impairments, to hire an additional interpreter for those individuals who choose to attend the integrated program. The Department cannot identify categorically the level of assistance or aid required in the integrated program.

The preamble to the proposed rule contained a statement that some interpreted as encouraging the continuation of separate schools, sheltered workshops, special recreational programs, and other similar programs. It is important to emphasize that § 36.202(c) only calls for separate programs when such programs are ''necessary'' to provide as effective an opportunity to individuals with disabilities as to other individuals. Likewise, § 36.203(a) only permits separate programs when a more integrated setting would not be ''appropriate.'' Separate programs are permitted, then, in only limited circumstances. The sentence at issue has been deleted from the preamble because it was too broadly stated and had been erroneously interpreted as Departmental encouragement of separate programs without qualification.

The proposed rule's reference in § 36.203(b) to separate programs or activities provided in accordance with ''this section'' has been changed to ''this subpart'' in recognition of the fact that separate programs or activities may, in some limited circumstances, be permitted not only by § 36.203(a) but also by § 36.202(c).

In addition, some commenters suggested that the individual with the disability is the only one who can decide whether a setting is ''appropriate'' and what the ''needs'' are.

Others suggested that only the public accommodation can make these determinations. The regulation does not give exclusive responsibility to either party. Rather, the determinations are to be made based on an objective view, presumably one which would take into account views of both parties.

Some commenters expressed concern that §36.203(c), which states that nothing in the rule requires an individual with a disability to accept special accommodations and services provided under the ADA, could be interpreted to allow guardians of infants or older people with disabilities to refuse medical treatment for their wards. Section 36.203(c) has been revised to make it clear that paragraph (c) is inapplicable to the concern of the commenters. A new paragraph (c)(2) has been added stating that nothing in the regulation authorizes the representative or guardian of an individual with a disability to decline food, water, medical treatment, or medical services for that individual. New paragraph (c) clarifies that neither the ADA nor the regulation alters current Federal law ensuring the rights of incompetent individuals with disabilities to receive food, water, and medical treatment. See, *e.g.*, Child Abuse Amendments of 1984 (42 U.S.C. 5106a(b)(10), 5106g(10)); Rehabilitation Act of 1973, as amended (29 U.S.C 794); Developmentally Disabled Assistance and Bill of Rights Act (42 U.S.C. 6042).

Sections 36.203(c) (1) and (2) are based on section 501(d) of the ADA. Section §501(d) was designed to clarify that nothing in the ADA requires individuals with disabilities to accept special accommodations and services for individuals with disabilities that may segregate them:

The Committee added this section (501(d)) to clarify that nothing in the ADA is intended to permit discriminatory treatment on the basis of disability, even when such treatment is rendered under the guise of providing an accommodation, service, aid or benefit to the individual with disability. For example, a blind individual may choose not to avail himself or herself of the right to go to the front of a line, even if a particular public accommodation has chosen to offer such a modification of a policy for blind individuals. Or, a blind individual may choose to decline to participate in a special museum tour that allows persons to touch sculptures in an exhibit and instead tour the exhibits at his or her own pace with the museum's recorded tour.

(Judiciary report at 71–72.) The Act is not to be construed to mean that an individual with disabilities must accept special accommodations and services for individuals with disabilities when that individual chooses to participate in the regular services already offered. Because medical treatment, including treatment for particular conditions, is not a special accommodation or service for individuals with disabilities under section 501(d), neither the Act nor this part provides affirmative authority to suspend such treatment. Section 501(d) is intended to clarify that the Act is not designed to foster discrimination through mandatory acceptance of special services when other alternatives are provided; this concern does not reach to the provision of medical treatment for the disabling condition itself.

Section 36.213 makes clear that the limitations contained in subpart C are to be read into subpart B. Thus, the integration requirement is subject to the various defenses contained in subpart C, such as safety, if eligibility criteria are at issue (§36.301(b)), or fundamental alteration and undue burden, if the concern is provision of auxiliary aids (§36.303(a)).

Section 36.204 Administrative Methods

Section 36.204 specifies that an individual or entity shall not, directly, or through contractual or other arrangements, utilize standards or criteria or methods of administration that have the effect of discriminating on the basis of disability or that perpetuate the discrimination of others who are subject to common administrative control. The preamble discussion of §36.301 addresses eligibility criteria in detail.

Section 36.204 is derived from section 302(b)(1)(D) of the Americans with Disabilities Act, and it uses the same language used in the employment section of the ADA (section 102(b)(3)). Both sections incorporate a disparate impact standard to ensure the effectiveness of the legislative mandate to end discrimination. This standard is consistent with the interpretation of section 504 by the U.S. Supreme Court in *Alexander* v. *Choate*, 469 U.S. 287 (1985). The Court in *Choate* explained that members of Congress made numerous statements during passage of section 504 regarding eliminating architectural barriers, providing access to transportation, and eliminating discriminatory effects of job qualification procedures. The Court then noted: ''These statements would ring hollow if the resulting legislation could not rectify the harms resulting from action that discriminated by effect as well as by design.'' *Id* at 297 (footnote omitted).

Of course, §36.204 is subject to the various limitations contained in subpart C including, for example, necessity (§36.301(a)), safety (§36.301(b)), fundamental alteration (§36.302(a)), readily achievable (§36.304(a)), and undue burden (§36.303(a)).

Section 36.205 Association

Section 36.205 implements section 302(b)(1)(E) of the Act, which provides that a public accommodation shall not exclude or

otherwise deny equal goods, services, facilities, privileges, advantages, accommodations, or other opportunities to an individual or entity because of the known disability of an individual with whom the individual or entity is known to have a relationship or association. This section is unchanged from the proposed rule.

The individuals covered under this section include any individuals who are discriminated against because of their known association with an individual with a disability. For example, it would be a violation of this part for a day care center to refuse admission to a child because his or her brother has HIV disease.

This protection is not limited to those who have a familial relationship with the individual who has a disability. If a place of public accommodation refuses admission to a person with cerebral palsy and his or her companions, the companions have an independent right of action under the ADA and this section.

During the legislative process, the term ''entity'' was added to section 302(b)(1)(E) to clarify that the scope of the provision is intended to encompass not only persons who have a known association with a person with a disability, but also entities that provide services to or are otherwise associated with such individuals. This provision was intended to ensure that entities such as health care providers, employees of social service agencies, and others who provide professional services to persons with disabilities are not subjected to discrimination because of their professional association with persons with disabilities. For example, it would be a violation of this section to terminate the lease of an entity operating an independent living center for persons with disabilities, or to seek to evict a health care provider because that individual or entity provides services to persons with mental impairments.

Section 36.206 Retaliation or Coercion

Section 36.206 implements section 503 of the ADA, which prohibits retaliation against any individual who exercises his or her rights under the Act. This section is unchanged from the proposed rule. Paragraph (a) of §36.206 provides that no private entity or public entity shall discriminate against any individual because that individual has exercised his or her right to oppose any act or practice made unlawful by this part, or because that individual made a charge, testified, assisted, or participated in any manner in an investigation, proceeding, or hearing under the Act or this part.

Paragraph (b) provides that no private entity or public entity shall coerce, intimidate, threaten, or interfere with any individual in the exercise of his or her rights under this part or because that individual aided or encouraged any other individual in the exercise or enjoyment of any right granted or protected by the Act or this part.

Illustrations of practices prohibited by this section are contained in paragraph (c), which is modeled on a similar provision in the regulations issued by the Department of Housing and Urban Development to implement the Fair Housing Act (see 24 CFR 100.400(c)(1)). Prohibited actions may include:

(1) Coercing an individual to deny or limit the benefits, services, or advantages to which he or she is entitled under the Act or this part;

(2) Threatening, intimidating, or interfering with an individual who is seeking to obtain or use the goods, services, facilities, privileges, advantages, or accommodations of a public accommodation;

(3) Intimidating or threatening any person because that person is assisting or encouraging an individual or group entitled to claim the rights granted or protected by the Act or this part to exercise those rights; or

(4) Retaliating against any person because that person has participated in any investigation or action to enforce the Act or this part.

This section protects not only individuals who allege a violation of the Act or this part, but also any individuals who support or assist them. This section applies to all investigations or proceedings initiated under the Act or this part without regard to the ultimate resolution of the underlying allegations. Because this section prohibits any act of retaliation or coercion in response to an individual's effort to exercise rights established by the Act and this part (or to support the efforts of another individual), the section applies not only to public accommodations that are otherwise subject to this part, but also to individuals other than public accommodations or to public entities. For example, it would be a violation of the Act and this part for a private individual, e.g., a restaurant customer, to harass or intimidate an individual with a disability in an effort to prevent that individual from patronizing the restaurant. It would, likewise, be a violation of the Act and this part for a public entity to take adverse action against an employee who appeared as a witness on behalf of an individual who sought to enforce the Act.

Section 36.207 Places of Public Accommodation Located in Private Residences

A private home used exclusively as a residence is not covered by title III because it is neither a ''commercial facility'' nor a ''place of public accommodation.'' In some situations, however, a private home is not used exclusively as a residence, but houses a place of public accommodation in all or part of a home (e.g., an accountant who meets with his or her clients at his or her residence). Section 36.207(a) provides that those portions of the private residence used in the operation

of the place of public accommodation are covered by this part.

For instance, a home or a portion of a home may be used as a day care center during the day and a residence at night. If all parts of the house are used for the day care center, then the entire residence is a place of public accommodation because no part of the house is used exclusively as a residence. If an accountant uses one room in the house solely as his or her professional office, then a portion of the house is used exclusively as a place of public accommodation and a portion is used exclusively as a residence. Section 36.207 provides that when a portion of a residence is used exclusively as a residence, that portion is not covered by this part. Thus, the portions of the accountant's house, other than the professional office and areas and spaces leading to it, are not covered by this part. All of the requirements of this rule apply to the covered portions, including requirements to make reasonable modifications in policies, eliminate discriminatory eligibility criteria, take readily achievable measures to remove barriers or provide readily achievable alternatives (e.g., making house calls), provide auxiliary aids and services and undertake only accessible new construction and alterations.

Paragraph (b) was added in response to comments that sought clarification on the extent of coverage of the private residence used as the place of public accommodation. The final rule makes clear that the place of accommodation extends to all areas of the home used by clients and customers of the place of public accommodation. Thus, the ADA would apply to any door or entry way, hallways, a restroom, if used by customers and clients; and any other portion of the residence, interior or exterior, used by customers or clients of the public accommodation. This interpretation is simply an application of the general rule for all public accommodations, which extends statutory requirements to all portions of the facility used by customers and clients, including, if applicable, restrooms, hallways, and approaches to the public accommodation. As with other public accommodations, barriers at the entrance and on the sidewalk leading up to the public accommodation, if the sidewalk is under the control of the public accommodation, must be removed if doing so is readily achievable.

The Department recognizes that many businesses that operate out of personal residences are quite small, often employing only the homeowner and having limited total revenues. In these circumstances the effect of ADA coverage would likely be quite minimal. For example, because the obligation to remove existing architectural barriers is limited to those that are easily accomplishable without much difficulty or expense (*see* §36.304), the range of required actions would be quite modest. It might not be readily achievable for such a place of public accommodation to remove any existing barriers. If it is not readily achievable to remove existing architectural barriers, a public accommodation located in a private residence may meet its obligations under the Act and this part by providing its goods or services to clients or customers with disabilities through the use of alternative measures, including delivery of goods or services in the home of the customer or client, to the extent that such alternative measures are readily achievable (*See* §36.305).

Some commenters asked for clarification as to how the new construction and alteration standards of subpart D will apply to residences. The new construction standards only apply to the extent that the residence or portion of the residence was designed or intended for use as a public accommodation. Thus, for example, if a portion of a home is designed or constructed for use exclusively as a lawyer's office or for use both as a lawyer's office and for residential purposes, then it must be designed in accordance with the new construction standards in the appendix. Likewise, if a homeowner is undertaking alterations to convert all or part of his residence to a place of public accommodation, that work must be done in compliance with the alterations standards in the appendix.

The preamble to the proposed rule addressed the applicable requirements when a commercial facility is located in a private residence. That situation is now addressed in §36.401(b) of subpart D.

Section 36.208 Direct Threat

Section 36.208(a) implements section 302(b)(3) of the Act by providing that this part does not require a public accommodation to permit an individual to participate in or benefit from the goods, services, facilities, privileges, advantages and accommodations of the public accommodation, if that individual poses a direct threat to the health or safety of others. This section is unchanged from the proposed rule.

The Department received a significant number of comments on this section. Commenters representing individuals with disabilities generally supported this provision, but suggested revisions to further limit its application. Commenters representing public accommodations generally endorsed modifications that would permit a public accommodation to exercise its own judgment in determining whether an individual poses a direct threat.

The inclusion of this provision is not intended to imply that persons with disabilities pose risks to others. It is intended to address concerns that may arise in this area. It establishes a strict standard that must be met before denying service to an individual

with a disability or excluding that individual from participation.

Paragraph (b) of this section explains that a ''direct threat'' is a significant risk to the health or safety of others that cannot be eliminated by a modification of policies, practices, or procedures, or by the provision of auxiliary aids and services. This paragraph codifies the standard first applied by the Supreme Court in *School Board of Nassau County* v. *Arline*, 480 U.S. 273 (1987), in which the Court held that an individual with a contagious disease may be an ''individual with handicaps'' under section 504 of the Rehabilitation Act. In *Arline*, the Supreme Court recognized that there is a need to balance the interests of people with disabilities against legitimate concerns for public safety. Although persons with disabilities are generally entitled to the protection of this part, a person who poses a significant risk to others may be excluded if reasonable modifications to the public accommodation's policies, practices, or procedures will not eliminate that risk. The determination that a person poses a direct threat to the health or safety of others may not be based on generalizations or stereotypes about the effects of a particular disability; it must be based on an individual assessment that conforms to the requirements of paragraph (c) of this section.

Paragraph (c) establishes the test to use in determining whether an individual poses a direct threat to the health or safety of others. A public accommodation is required to make an individualized assessment, based on reasonable judgment that relies on current medical evidence or on the best available objective evidence, to determine: The nature, duration, and severity of the risk; the probability that the potential injury will actually occur; and whether reasonable modifications of policies, practices, or procedures will mitigate the risk. This is the test established by the Supreme Court in *Arline*. Such an inquiry is essential if the law is to achieve its goal of protecting disabled individuals from discrimination based on prejudice, stereotypes, or unfounded fear, while giving appropriate weight to legitimate concerns, such as the need to avoid exposing others to significant health and safety risks. Making this assessment will not usually require the services of a physician. Sources for medical knowledge include guidance from public health authorities, such as the U.S. Public Health Service, the Centers for Disease Control, and the National Institutes of Health, including the National Institute of Mental Health.

Many of the commenters sought clarification of the inquiry requirement. Some suggested that public accommodations should be prohibited from making any inquiries to determine if an individual with a disability would pose a direct threat to other persons. The Department believes that to preclude all such inquiries would be inappropriate. Under §36.301 of this part, a public accommodation is permitted to establish eligibility criteria necessary for the safe operation of the place of public accommodation. Implicit in that right is the right to ask if an individual meets the criteria. However, any eligibility or safety standard established by a public accommodation must be based on actual risk, not on speculation or stereotypes; it must be applied to all clients or customers of the place of public accommodation; and inquiries must be limited to matters necessary to the application of the standard.

Some commenters suggested that the test established in the *Arline* decision, which was developed in the context of an employment case, is too stringent to apply in a public accommodations context where interaction between the public accommodation and its client or customer is often very brief. One suggested alternative was to permit public accommodations to exercise ''good faith'' judgment in determining whether an individual poses a direct threat, particularly when a public accommodation is dealing with a client or customer engaged in disorderly or disruptive behavior.

The Department believes that the ADA clearly requires that any determination to exclude an individual from participation must be based on an objective standard. A public accommodation may establish neutral eligibility criteria as a condition of receiving its goods or services. As long as these criteria are necessary for the safe provision of the public accommodation's goods and services and applied neutrally to all clients or customers, regardless of whether they are individuals with disabilities, a person who is unable to meet the criteria may be excluded from participation without inquiry into the underlying reason for the inability to comply. In places of public accommodation such as restaurants, theaters, or hotels, where the contact between the public accommodation and its clients is transitory, the uniform application of an eligibility standard precluding violent or disruptive behavior by any client or customer should be sufficient to enable a public accommodation to conduct its business in an orderly manner.

Some other commenters asked for clarification of the application of this provision to persons, particularly children, who have short-term, contagious illnesses, such as fevers, influenza, or the common cold. It is common practice in schools and day care settings to exclude persons with such illnesses until the symptoms subside. The Department believes that these commenters misunderstand the scope of this rule. The ADA only prohibits discrimination against an individual with a disability. Under the ADA and

this part, a ''disability'' is defined as a physical or mental impairment that substantially limits one or more major life activities. Common, short-term illnesses that predictably resolve themselves within a matter of days do not ''substantially limit'' a major life activity; therefore, it is not a violation of this part to exclude an individual from receiving the services of a public accommodation because of such transitory illness. However, this part does apply to persons who have long-term illnesses. Any determination with respect to a person who has a chronic or long-term illness must be made in compliance with the requirements of this section.

Section 36.209 Illegal Use of Drugs

Section 36.209 effectuates section 510 of the ADA, which clarifies the Act's application to people who use drugs illegally. Paragraph (a) provides that this part does not prohibit discrimination based on an individual's current illegal use of drugs.

The Act and the regulation distinguish between illegal use of drugs and the legal use of substances, whether or not those substances are ''controlled substances,'' as defined in the Controlled Substances Act (21 U.S.C. 812). Some controlled substances are prescription drugs that have legitimate medical uses. Section 36.209 does not affect use of controlled substances pursuant to a valid prescription, under supervision by a licensed health care professional, or other use that is authorized by the Controlled Substances Act or any other provision of Federal law. It does apply to illegal use of those substances, as well as to illegal use of controlled substances that are not prescription drugs. The key question is whether the individual's use of the substance is illegal, not whether the substance has recognized legal uses. Alcohol is not a controlled substance, so use of alcohol is not addressed by § 36.209. Alcoholics are individuals with disabilities, subject to the protections of the statute.

A distinction is also made between the use of a substance and the status of being addicted to that substance. Addiction is a disability, and addicts are individuals with disabilities protected by the Act. The protection, however, does not extend to actions based on the illegal use of the substance. In other words, an addict cannot use the fact of his or her addiction as a defense to an action based on illegal use of drugs. This distinction is not artificial. Congress intended to deny protection to people who engage in the illegal use of drugs, whether or not they are addicted, but to provide protection to addicts so long as they are not currently using drugs.

A third distinction is the difficult one between current use and former use. The definition of ''current illegal use of drugs'' in § 36.104, which is based on the report of the Conference Committee, H.R. Conf. Rep. No. 596, 101st Cong., 2d Sess. 64 (1990), is ''illegal use of drugs that occurred recently enough to justify a reasonable belief that a person's drug use is current or that continuing use is a real and ongoing problem.''

Paragraph (a)(2)(i) specifies that an individual who has successfully completed a supervised drug rehabilitation program or has otherwise been rehabilitated successfully and who is not engaging in current illegal use of drugs is protected. Paragraph (a)(2)(ii) clarifies that an individual who is currently participating in a supervised rehabilitation program and is not engaging in current illegal use of drugs is protected. Paragraph (a)(2)(iii) provides that a person who is erroneously regarded as engaging in current illegal use of drugs, but who is not engaging in such use, is protected.

Paragraph (b) provides a limited exception to the exclusion of current illegal users of drugs from the protections of the Act. It prohibits denial of health services, or services provided in connection with drug rehabilitation, to an individual on the basis of current illegal use of drugs, if the individual is otherwise entitled to such services. As explained further in the discussion of § 36.302, a health care facility that specializes in a particular type of treatment, such as care of burn victims, is not required to provide drug rehabilitation services, but it cannot refuse to treat an individual's burns on the grounds that the individual is illegally using drugs.

A commenter argued that health care providers should be permitted to use their medical judgment to postpone discretionary medical treatment of individuals under the influence of alcohol or drugs. The regulation permits a medical practitioner to take into account an individual's use of drugs in determining appropriate medical treatment. Section 36.209 provides that the prohibitions on discrimination in this part do not apply when the public accommodation acts on the basis of current illegal use of drugs. Although those prohibitions do apply under paragraph (b), the limitations established under this part also apply. Thus, under § 36.208, a health care provider or other public accommodation covered under § 36.209(b) may exclude an individual whose current illegal use of drugs poses a direct threat to the health or safety of others, and, under § 36.301, a public accommodation may impose or apply eligibility criteria that are necessary for the provision of the services being offered, and may impose legitimate safety requirements that are necessary for safe operation. These same limitations also apply to individuals with disabilities who use alcohol or prescription drugs. The Department believes that these provisions address this commenter's concerns.

Other commenters pointed out that abstention from the use of drugs is an essential

condition for participation in some drug rehabilitation programs, and may be a necessary requirement in inpatient or residential settings. The Department believes that this comment is well-founded. Congress clearly did not intend to exclude from drug treatment programs the very individuals who need such programs because of their use of drugs. In such a situation, however, once an individual has been admitted to a program, abstention may be a necessary and appropriate condition to continued participation. The final rule therefore provides that a drug rehabilitation or treatment program may deny participation to individuals who use drugs while they are in the program.

Paragraph (c) expresses Congress' intention that the Act be neutral with respect to testing for illegal use of drugs. This paragraph implements the provision in section 510(b) of the Act that allows entities ''to adopt or administer reasonable policies or procedures, including but not limited to drug testing,'' that ensure an individual who is participating in a supervised rehabilitation program, or who has completed such a program or otherwise been rehabilitated successfully, is no longer engaging in the illegal use of drugs. Paragraph (c) is not to be construed to encourage, prohibit, restrict, or authorize the conducting of testing for the illegal use of drugs.

Paragraph (c) of §36.209 clarifies that it is not a violation of this part to adopt or administer reasonable policies or procedures to ensure that an individual who formerly engaged in the illegal use of drugs is not currently engaging in illegal use of drugs. Any such policies or procedures must, of course, be reasonable, and must be designed to identify accurately the illegal use of drugs. This paragraph does not authorize inquiries, tests, or other procedures that would disclose use of substances that are not controlled substances or are taken under supervision by a licensed health care professional, or other uses authorized by the Controlled Substances Act or other provisions of Federal law, because such uses are not included in the definition of ''illegal use of drugs.''

One commenter argued that the rule should permit testing for lawful use of prescription drugs, but most favored the explanation that tests must be limited to *unlawful* use in order to avoid revealing the use of prescription medicine used to treat disabilities. Tests revealing legal use of prescription drugs might violate the prohibition in §36.301 of attempts to unnecessarily identify the existence of a disability.

Section 36.210 Smoking

Section 36.210 restates the clarification in section 501(b) of the Act that the Act does not preclude the prohibition of, or imposition of restrictions on, smoking. Some commenters argued that §36.210 does not go far enough, and that the regulation should prohibit smoking in all places of public accommodation. The reference to smoking in section 501 merely clarifies that the Act does not require public accommodations to accommodate smokers by permitting them to smoke in places of public accommodations.

Section 36.211 Maintenance of Accessible Features

Section 36.211 provides that a public accommodation shall maintain in operable working condition those features of facilities and equipment that are required to be readily accessible to and usable by persons with disabilities by the Act or this part. The Act requires that, to the maximum extent feasible, facilities must be accessible to, *and usable by*, individuals with disabilities. This section recognizes that it is not sufficient to provide features such as accessible routes, elevators, or ramps, if those features are not maintained in a manner that enables individuals with disabilities to use them. Inoperable elevators, locked accessible doors, or ''accessible'' routes that are obstructed by furniture, filing cabinets, or potted plants are neither ''accessible to'' nor ''usable by'' individuals with disabilities.

Some commenters objected that this section appeared to establish an absolute requirement and suggested that language from the preamble be included in the text of the regulation. It is, of course, impossible to guarantee that mechanical devices will never fail to operate. Paragraph (b) of the final regulation provides that this section does not prohibit isolated or temporary interruptions in service or access due to maintenance or repairs. This paragraph is intended to clarify that temporary obstructions or isolated instances of mechanical failure would not be considered violations of the Act or this part. However, allowing obstructions or ''out of service'' equipment to persist beyond a reasonable period of time would violate this part, as would repeated mechanical failures due to improper or inadequate maintenance. Failure of the public accommodation to ensure that accessible routes are properly maintained and free of obstructions, or failure to arrange prompt repair of inoperable elevators or other equipment intended to provide access, would also violate this part.

Other commenters requested that this section be expanded to include specific requirements for inspection and maintenance of equipment, for training staff in the proper operation of equipment, and for maintenance of specific items. The Department believes that this section properly establishes the general requirement for maintaining access and that further, more detailed requirements are not necessary.

Section 36.212 Insurance

The Department received numerous comments on proposed §36.212. Most supported the proposed regulation but felt that it did not go far enough in protecting individuals with disabilities and persons associated with them from discrimination. Many commenters argued that language from the preamble to the proposed regulation should be included in the text of the final regulation. Other commenters argued that even that language was not strong enough, and that more stringent standards should be established. Only a few commenters argued that the Act does not apply to insurance underwriting practices or the terms of insurance contracts. These commenters cited language from the Senate committee report (S. Rep. No. 116, 101st Cong., 1st Sess., at 84–86 (1989) (hereinafter ''Senate report'')), indicating that Congress did not intend to affect existing insurance practices.

The Department has decided to adopt the language of the proposed rule without change. Sections 36.212 (a) and (b) restate section 501(c) of the Act, which provides that the Act shall not be construed to restrict certain insurance practices on the part of insurance companies and employers, as long as such practices are not used to evade the purposes of the Act. Section 36.212(c) is a specific application of §36.202(a), which prohibits denial of participation on the basis of disability. It provides that a public accommodation may not refuse to serve an individual with a disability because of limitations on coverage or rates in its insurance policies (see Judiciary report at 56).

Many commenters supported the requirements of §36.212(c) in the proposed rule because it addressed an important reason for denial of services by public accommodations. One commenter argued that services could be denied if the insurance coverage required exclusion of people whose disabilities were reasonably related to the risks involved in that particular place of public accommodation. Sections 36.208 and 36.301 establish criteria for denial of participation on the basis of legitimate safety concerns. This paragraph does not prohibit consideration of such concerns in insurance policies, but provides that any exclusion on the basis of disability must be based on the permissible criteria, rather than on the terms of the insurance contract.

Language in the committee reports indicates that Congress intended to reach insurance practices by prohibiting differential treatment of individuals with disabilities in insurance offered by public accommodations unless the differences are justified. ''Under the ADA, a person with a disability cannot be denied insurance or be subject to different terms or conditions of insurance based on disability alone, if the disability does not pose increased risks'' (Senate report at 84; Education and Labor report at 136). Section 501(c) (1) of the Act was intended to emphasize that ''insurers may continue to sell to and underwrite individuals applying for life, health, or other insurance on an individually underwritten basis, or to service such insurance products, *so long as the standards used are based on sound actuarial data and not on speculation*'' (Judiciary report at 70 (emphasis added); see also Senate report at 85; Education and Labor report at 137).

The committee reports indicate that underwriting and classification of risks must be ''based on sound actuarial principles or be related to actual or reasonably anticipated experience'' (see, *e.g.*, Judiciary report at 71). Moreover, ''while a plan which limits certain kinds of coverage based on classification of risk would be allowed * * *, the plan may not refuse to insure, or refuse to continue to insure, or limit the amount, extent, or kind of coverage available to an individual, or charge a different rate for the same coverage solely because of a physical or mental impairment, except where the refusal, limitation, or rate differential is based on sound actuarial principles or is related to actual or reasonably anticipated experience'' (Senate report at 85; Education and Labor report at 136–37; Judiciary report at 71). The ADA, therefore, does not prohibit use of legitimate actuarial considerations to justify differential treatment of individuals with disabilities in insurance.

The committee reports provide some guidance on how nondiscrimination principles in the disability rights area relate to insurance practices. For example, a person who is blind may not be denied coverage based on blindness independent of actuarial risk classification. With respect to group health insurance coverage, an individual with a pre-existing condition may be denied coverage for that condition for the period specified in the policy, but cannot be denied coverage for illness or injuries unrelated to the pre-existing condition. Also, a public accommodation may offer insurance policies that limit coverage for certain procedures or treatments, but may not entirely deny coverage to a person with a disability.

The Department requested comment on the extent to which data that would establish statistically sound correlations are available. Numerous commenters cited pervasive problems in the availability and cost of insurance for individuals with disabilities and parents of children with disabilities. No commenters cited specific data, or sources of data, to support specific exclusionary practices. Several commenters reported that, even when statistics are available, they are often outdated and do not reflect current medical technology and treatment methods. Concern was expressed that adequate efforts are not made to distinguish those individuals

who are high users of health care from individuals in the same diagnostic groups who may be low users of health care. One insurer reported that ''hard data and actuarial statistics are not available to provide precise numerical justifications for every underwriting determination,'' but argued that decisions may be based on ''logical principles generally accepted by actuarial science and fully consistent with state insurance laws.'' The commenter urged that the Department recognize the validity of information other than statistical data as a basis for insurance determinations.

The most frequent comment was a recommendation that the final regulation should require the insurance company to provide a copy of the actuarial data on which its actions are based when requested by the applicant. Such a requirement would be beyond anything contemplated by the Act or by Congress and has therefore not been included in the Department's final rule. Because the legislative history of the ADA clarifies that different treatment of individuals with disabilities in insurance may be justified by sound actuarial data, such actuarial data will be critical to any potential litigation on this issue. This information would presumably be obtainable in a court proceeding where the insurer's actuarial data was the basis for different treatment of persons with disabilities. In addition, under some State regulatory schemes, insurers may have to file such actuarial information with the State regulatory agency and this information may be obtainable at the State level.

A few commenters representing the insurance industry conceded that underwriting practices in life and health insurance are clearly covered, but argued that property and casualty insurance are not covered. The Department sees no reason for this distinction. Although life and health insurance are the areas where the regulation will have its greatest application, the Act applies equally to unjustified discrimination in all types of insurance provided by public accommodations. A number of commenters, for example, reported difficulties in obtaining automobile insurance because of their disabilities, despite their having good driving records.

Section 36.213 Relationship of Subpart 8 to Subparts C and D

This section explains that subpart B sets forth the general principles of nondiscrimination applicable to all entities subject to this regulation, while subparts C and D provide guidance on the application of this part to specific situations. The specific provisions in subparts C and D, including the limitations on those provisions, control over the general provisions in circumstances where both specific and general provisions apply. Resort to the general provisions of subpart B is only appropriate where there are no applicable specific rules of guidance in subparts C or D. This interaction between the specific requirements and the general requirements operates with regard to contractual obligations as well.

One illustration of this principle is its application to the obligation of a public accommodation to provide access to services by removal of architectural barriers or by alternatives to barrier removal. The general requirement, established in subpart B by § 36.203, is that a public accommodation must provide its services to individuals with disabilities in the most integrated setting appropriate. This general requirement would appear to categorically prohibit ''segregated'' seating for persons in wheelchairs. Section 36.304, however, only requires removal of architectural barriers to the extent that removal is ''readily achievable.'' If providing access to all areas of a restaurant, for example, would not be ''readily achievable,'' a public accommodation may provide access to selected areas only. Also, § 36.305 provides that, where barrier removal is not readily achievable, a public accommodation may use alternative, readily achievable methods of making services available, such as curbside service or home delivery. Thus, in this manner, the specific requirements of §§ 36.304 and 36.305 control over the general requirement of § 36.203.

Subpart C—Specific Requirements

In general, subpart C implements the ''specific prohibitions'' that comprise section 302(b)(2) of the ADA. It also addresses the requirements of section 309 of the ADA regarding examinations and courses.

Section 36.301 Eligibility Criteria

Section 36.301 of the rule prohibits the imposition or application of eligibility criteria that screen out or tend to screen out an individual with a disability or any class of individuals with disabilities from fully and equally enjoying any goods, services, facilities, privileges, advantages, and accommodations, unless such criteria can be shown to be necessary for the provision of the goods, services, facilities, privileges, advantages, or accommodations being offered. This prohibition is based on section 302(b)(2)(A)(i) of the ADA.

It would violate this section to establish exclusive or segregative eligibility criteria that would bar, for example, all persons who are deaf from playing on a golf course or all individuals with cerebral palsy from attending a movie theater, or limit the seating of individuals with Down's syndrome to only particular areas of a restaurant. The wishes, tastes, or preferences of other customers may not be asserted to justify criteria that

would exclude or segregate individuals with disabilities.

Section 36.301 also prohibits attempts by a public accommodation to unnecessarily identify the existence of a disability; for example, it would be a violation of this section for a retail store to require an individual to state on a credit application whether the applicant has epilepsy, mental illness, or any other disability, or to inquire unnecessarily whether an individual has HIV disease.

Section 36.301 also prohibits policies that unnecessarily impose requirements or burdens on individuals with disabilities that are not placed on others. For example, public accommodations may not require that an individual with a disability be accompanied by an attendant. As provided by §36.306, however, a public accommodation is not required to provide services of a personal nature including assistance in toileting, eating, or dressing.

Paragraph (c) of §36.301 provides that public accommodations may not place a surcharge on a particular individual with a disability or any group of individuals with disabilities to cover the costs of measures, such as the provision of auxiliary aids and services, barrier removal, alternatives to barrier removal, and reasonable modifications in policies, practices, and procedures, that are required to provide that individual or group with the nondiscriminatory treatment required by the Act or this part.

A number of commenters inquired as to whether deposits required for the use of auxiliary aids, such as assistive listening devices, are prohibited surcharges. It is the Department's view that reasonable, completely refundable, deposits are not to be considered surcharges prohibited by this section. Requiring deposits is an important means of ensuring the availability of equipment necessary to ensure compliance with the ADA.

Other commenters sought clarification as to whether §36.301(c) prohibits professionals from charging for the additional time that it may take in certain cases to provide services to an individual with disabilities. The Department does not intend §36.301(c) to prohibit professionals who bill on the basis of time from charging individuals with disabilities on that basis. However, fees may not be charged for the provision of auxiliary aids and services, barrier removal, alternatives to barrier removal, reasonable modifications in policies, practices, and procedures, or any other measures necessary to ensure compliance with the ADA.

Other commenters inquired as to whether day care centers may charge for extra services provided to individuals with disabilities. As stated above, §36.302(c) is intended only to prohibit charges for measures necessary to achieve compliance with the ADA.

Another commenter asserted that charges may be assessed for home delivery provided as an alternative to barrier removal under §36.305, when home delivery is provided to all customers for a fee. Charges for home delivery are permissible if home delivery is not considered an alternative to barrier removal. If the public accommodation offers an alternative, such as curb, carry-out, or sidewalk service for which no surcharge is assessed, then it may charge for home delivery in accordance with its standard pricing for home delivery.

In addition, §36.301 prohibits the imposition of criteria that ''tend to'' screen out an individual with a disability. This concept, which is derived from current regulations under section 504 (see, *e.g.*, 45 CFR 84.13), makes it discriminatory to impose policies or criteria that, while not creating a direct bar to individuals with disabilities, indirectly prevent or limit their ability to participate. For example, requiring presentation of a driver's license as the sole means of identification for purposes of paying by check would violate this section in situations where, for example, individuals with severe vision impairments or developmental disabilities or epilepsy are ineligible to receive a driver's license and the use of an alternative means of identification, such as another photo I.D. or credit card, is feasible.

A public accommodation may, however, impose neutral rules and criteria that screen out, or tend to screen out, individuals with disabilities, if the criteria are necessary for the safe operation of the public accommodation. Examples of safety qualifications that would be justifiable in appropriate circumstances would include height requirements for certain amusement park rides or a requirement that all participants in a recreational rafting expedition be able to meet a necessary level of swimming proficiency. Safety requirements must be based on actual risks and not on speculation, stereotypes, or generalizations about individuals with disabilities.

Section 36.302 Modifications in Policies, Practices, or Procedures

Section 36.302 of the rule prohibits the failure to make reasonable modifications in policies, practices, and procedures when such modifications may be necessary to afford any goods, services, facilities, privileges, advantages, or accommodations, unless the entity can demonstrate that making such modifications would fundamentally alter the nature of such goods, services, facilities, privileges, advantages, or accommodations. This prohibition is based on section 302(b)(2)(A)(ii) of the ADA.

For example, a parking facility would be required to modify a rule barring all vans or all vans with raised roofs, if an individual who uses a wheelchair-accessible van wishes to park in that facility, and if overhead structures are high enough to accommodate

the height of the van. A department store may need to modify a policy of only permitting one person at a time in a dressing room, if an individual with mental retardation needs and requests assistance in dressing from a companion. Public accommodations may need to revise operational policies to ensure that services are available to individuals with disabilities. For instance, a hotel may need to adopt a policy of keeping an accessible room unoccupied until an individual with a disability arrives at the hotel, assuming the individual has properly reserved the room.

One example of application of this principle is specifically included in a new §36.302(d) on check-out aisles. That paragraph provides that a store with check-out aisles must ensure that an adequate number of accessible check-out aisles is kept open during store hours, or must otherwise modify its policies and practices, in order to ensure that an equivalent level of convenient service is provided to individuals with disabilities as is provided to others. For example, if only one check-out aisle is accessible, and it is generally used for express service, one way of providing equivalent service is to allow persons with mobility impairments to make all of their purchases at that aisle. This principle also applies with respect to other accessible elements and services. For example, a particular bank may be in compliance with the accessibility guidelines for new construction incorporated in appendix A with respect to automated teller machines (ATM) at a new branch office by providing one accessible walk-up machine at that location, even though an adjacent walk-up ATM is not accessible and the drive-up ATM is not accessible. However, the bank would be in violation of this section if the accessible ATM was located in a lobby that was locked during evening hours while the drive-up ATM was available to customers without disabilities during those same hours. The bank would need to ensure that the accessible ATM was available to customers during the hours that any of the other ATM's was available.

A number of commenters inquired as to the relationship between this section and §36.307, ''Accessible or special goods.'' Under §36.307, a public accommodation is not required to alter its inventory to include accessible or special goods that are designed for, or facilitate use by, individuals with disabilities. The rule enunciated in §36.307 is consistent with the ''fundamental alteration'' defense to the reasonable modifications requirement of §36.302. Therefore, §36.302 would not require the inventory of goods provided by a public accommodation to be altered to include goods with accessibility features. For example, §36.302 would not require a bookstore to stock Brailled books or order Brailled books, if it does not do so in the normal course of its business.

The rule does not require modifications to the legitimate areas of specialization of service providers. Section 36.302(b) provides that a public accommodation may refer an individual with a disability to another public accommodation, if that individual is seeking, or requires, treatment or services outside of the referring public accommodation's area of specialization, and if, in the normal course of its operations, the referring public accommodation would make a similar referral for an individual without a disability who seeks or requires the same treatment or services.

For example, it would not be discriminatory for a physician who specializes only in burn treatment to refer an individual who is deaf to another physician for treatment of an injury other than a burn injury. To require a physician to accept patients outside of his or her specialty would fundamentally alter the nature of the medical practice and, therefore, not be required by this section.

A clinic specializing exclusively in drug rehabilitation could similarly refuse to treat a person who is not a drug addict, but could not refuse to treat a person who is a drug addict simply because the patient tests positive for HIV. Conversely, a clinic that specializes in the treatment of individuals with HIV could refuse to treat an individual that does not have HIV, but could not refuse to treat a person for HIV infection simply because that person is also a drug addict.

Some commenters requested clarification as to how this provision would apply to situations where manifestations of the disability in question, itself, would raise complications requiring the expertise of a different practitioner. It is not the Department's intention in §36.302(b) to prohibit a physician from referring an individual with a disability to another physician, if the disability itself creates specialized complications for the patient's health that the physician lacks the experience or knowledge to address (see Education and Labor report at 106).

Section 36.302(c)(1) requires that a public accommodation modify its policies, practices, or procedures to permit the use of a service animal by an individual with a disability in any area open to the general public. The term ''service animal'' is defined in §36.104 to include guide dogs, signal dogs, or any other animal individually trained to provide assistance to an individual with a disability.

A number of commenters pointed to the difficulty of making the distinction required by the proposed rule between areas open to the general public and those that are not. The ambiguity and uncertainty surrounding these provisions has led the Department to adopt a single standard for all public accommodations.

Section 36.302(c)(1) of the final rule now provides that ''[g]enerally, a public accommodation shall modify policies, practices, and procedures to permit the use of a service animal by an individual with a disability.'' This formulation reflects the general intent of Congress that public accommodations take the necessary steps to accommodate service animals and to ensure that individuals with disabilities are not separated from their service animals. It is intended that the broadest feasible access be provided to service animals in all places of public accommodation, including movie theaters, restaurants, hotels, retail stores, hospitals, and nursing homes (see Education and Labor report at 106; Judiciary report at 59). The section also acknowledges, however, that, in rare circumstances, accommodation of service animals may not be required because a fundamental alteration would result in the nature of the goods, services, facilities, privileges, or accommodations offered or provided, or the safe operation of the public accommodation would be jeopardized.

As specified in §36.302(c)(2), the rule does not require a public accommodation to supervise or care for any service animal. If a service animal must be separated from an individual with a disability in order to avoid a fundamental alteration or a threat to safety, it is the responsibility of the individual with the disability to arrange for the care and supervision of the animal during the period of separation.

A museum would not be required by §36.302 to modify a policy barring the touching of delicate works of art in order to enhance the participation of individuals who are blind, if the touching threatened the integrity of the work. Damage to a museum piece would clearly be a fundamental alteration that is not required by this section.

Section 36.303 Auxiliary Aids and Services.

Section 36.303 of the final rule requires a public accommodation to take such steps as may be necessary to ensure that no individual with a disability is excluded, denied services, segregated or otherwise treated differently than other individuals because of the absence of auxiliary aids and services, unless the public accommodation can demonstrate that taking such steps would fundamentally alter the nature of the goods, services, facilities, advantages, or accommodations being offered or would result in an undue burden. This requirement is based on section 302(b)(2)(A)(iii) of the ADA.

Implicit in this duty to provide auxiliary aids and services is the underlying obligation of a public accommodation to communicate effectively with its customers, clients, patients, or participants who have disabilities affecting hearing, vision, or speech. To give emphasis to this underlying obligation, §36.303(c) of the rule incorporates language derived from section 504 regulations for federally conducted programs (see *e.g.*, 28 CFR 39.160(a)) that requires that appropriate auxiliary aids and services be furnished to ensure that communication with persons with disabilities is as effective as communication with others.

Auxiliary aids and services include a wide range of services and devices for ensuring effective communication. Use of the most advanced technology is not required so long as effective communication is ensured. The Department's proposed §36.303(b) provided a list of examples of auxiliary aids and services that was taken from the definition of auxiliary aids and services in section 3(1) of the ADA and was supplemented by examples from regulations implementing section 504 in federally conducted programs (see *e.g.*, 28 CFR 39.103). A substantial number of commenters suggested that additional examples be added to this list. The Department has added several items to this list but wishes to clarify that the list is not an all-inclusive or exhaustive catalogue of possible or available auxiliary aids or services. It is not possible to provide an exhaustive list, and such an attempt would omit new devices that will become available with emerging technology.

The Department has added videotext displays, computer-aided transcription services, and open and closed captioning to the list of examples. Videotext displays have become an important means of accessing auditory communications through a public address system. Transcription services are used to relay aurally delivered material almost simultaneously in written form to persons who are deaf or hard of hearing. This technology is often used at conferences, conventions, and hearings. While the proposed rule expressly included television decoder equipment as an auxiliary aid or service, it did not mention captioning itself. The final rule rectifies this omission by mentioning both closed and open captioning.

In this section, the Department has changed the proposed rule's phrase, ''orally delivered materials,'' to the phrase, ''aurally delivered materials.'' This new phrase tracks the language in the definition of ''auxiliary aids and services'' in section 3 of the ADA and is meant to include nonverbal sounds and alarms and computer-generated speech.

Several persons and organizations requested that the Department replace the term ''telecommunications devices for deaf persons'' or ''TDD's'' with the term ''text telephone.'' The Department has declined to do so. The Department is aware that the Architectural and Transportation Barriers Compliance Board has used the phrase ''text telephone'' in lieu of the statutory term ''TDD'' in its final accessibility guidelines. Title IV of the ADA, however, uses the term ''Telecommunications Device for the Deaf,''

and the Department believes it would be inappropriate to abandon this statutory term at this time.

Paragraph (b)(2) lists examples of aids and services for making visually delivered materials accessible to persons with visual impairments. Many commenters proposed additional examples such as signage or mapping, audio description services, secondary auditory programs (SAP), telebraillers, and reading machines. While the Department declines to add these items to the list in the regulation, they may be considered appropriate auxiliary aids and services.

Paragraph (b)(3) refers to the acquisition or modification of equipment or devices. For example, tape players used for an audio-guided tour of a museum exhibit may require the addition of Brailled adhesive labels to the buttons on a reasonable number of the tape players to facilitate their use by individuals who are blind. Similarly, permanent or portable assistive listening systems for persons with hearing impairments may be required at a hotel conference center.

Several commenters suggested the addition of current technological innovations in microelectronics and computerized control systems (e.g., voice recognition systems, automatic dialing telephones, and infrared elevator and light control systems) to the list of auxiliary aids and services. The Department interprets auxiliary aids and services as those aids and services designed to provide effective communications, i. e., making aurally and visually delivered information available to persons with hearing, speech, and vision impairments. Methods of making services, programs, or activities accessible to, or usable by, individuals with mobility or manual dexterity impairments are addressed by other sections of this part, including the requirements for modifications in policies, practices, or procedures (§ 36.302), the elimination of existing architectural barriers (§ 36.304), and the provision of alternatives to barriers removal (§ 36.305).

Paragraph (b)(4) refers to other similar services and actions. Several commenters asked for clarification that ''similar services and actions'' include retrieving items from shelves, assistance in reaching a marginally accessible seat, pushing a barrier aside in order to provide an accessible route, or assistance in removing a sweater or coat. While retrieving an item from a shelf might be an ''auxiliary aid or service'' for a blind person who could not locate the item without assistance, it might be a readily achievable alternative to barrier removal for a person using a wheelchair who could not reach the shelf, or a reasonable modification to a self-service policy for an individual who lacked the ability to grasp the item. (Of course, a store would not be required to provide a personal shopper.) As explained above, auxiliary aids and services are those aids and services required to provide effective communications. Other forms of assistance are more appropriately addressed by other provisions of the final rule.

The auxiliary aid requirement is a flexible one. A public accommodation can choose among various alternatives as long as the result is effective communication. For example, a restaurant would not be required to provide menus in Braille for patrons who are blind, if the waiters in the restaurant are made available to read the menu. Similarly, a clothing boutique would not be required to have Brailled price tags if sales personnel provide price information orally upon request; and a bookstore would not be required to make available a sign language interpreter, because effective communication can be conducted by notepad.

A critical determination is what constitutes an effective auxiliary aid or service. The Department's proposed rule recommended that, in determining what auxiliary aid to use, the public accommodation consult with an individual before providing him or her with a particular auxiliary aid or service. This suggestion sparked a significant volume of public comment. Many persons with disabilities, particularly persons who are deaf or hard of hearing, recommended that the rule should require that public accommodations give ''primary consideration'' to the ''expressed choice'' of an individual with a disability. These commenters asserted that the proposed rule was inconsistent with congressional intent of the ADA, with the Department's proposed rule implementing title II of the ADA, and with longstanding interpretations of section 504 of the Rehabilitation Act.

Based upon a careful review of the ADA legislative history, the Department believes that Congress did not intend under title III to impose upon a public accommodation the requirement that it give primary consideration to the request of the individual with a disability. To the contrary, the legislative history demonstrates congressional intent to strongly encourage consulting with persons with disabilities. In its analysis of the ADA's auxiliary aids requirement for public accommodations, the House Education and Labor Committee stated that it ''expects'' that ''public accommodation(s) will consult with the individual with a disability before providing a particular auxiliary aid or service'' (Education and Labor report at 107). Some commenters also cited a different committee statement that used mandatory language as evidence of legislative intent to require primary consideration. However, this statement was made in the context of reasonable accommodations required by title I with respect to employment (Education and Labor report at 67). Thus, the Department finds that strongly encouraging consultation with

persons with disabilities, in lieu of mandating primary consideration of their expressed choice, is consistent with congressional intent.

The Department wishes to emphasize that public accommodations must take steps necessary to ensure that an individual with a disability will not be excluded, denied services, segregated or otherwise treated differently from other individuals because of the use of inappropriate or ineffective auxiliary aids. In those situations requiring an interpreter, the public accommodations must secure the services of a qualified interpreter, unless an undue burden would result.

In the analysis of §36.303(c) in the proposed rule, the Department gave as an example the situation where a note pad and written materials were insufficient to permit effective communication in a doctor's office when the matter to be decided was whether major surgery was necessary. Many commenters objected to this statement, asserting that it gave the impression that only decisions about major surgery would merit the provision of a sign language interpreter. The statement would, as the commenters also claimed, convey the impression to other public accommodations that written communications would meet the regulatory requirements in all but the most extreme situations. The Department, when using the example of major surgery, did not intend to limit the provision of interpreter services to the most extreme situations.

Other situations may also require the use of interpreters to ensure effective communication depending on the facts of the particular case. It is not difficult to imagine a wide range of communications involving areas such as health, legal matters, and finances that would be sufficiently lengthy or complex to require an interpreter for effective communication. In some situations, an effective alternative to use of a notepad or an interpreter may be the use of a computer terminal upon which the representative of the public accommodation and the customer or client can exchange typewritten messages.

Section 36.303(d) specifically addresses requirements for TDD's. Partly because of the availability of telecommunications relay services to be established under title IV of the ADA, §36.303(d)(2) provides that a public accommodation is not required to use a telecommunication device for the deaf (TDD) in receiving or making telephone calls incident to its operations. Several commenters were concerned that relay services would not be sufficient to provide effective access in a number of situations. Commenters argued that relay systems (1) do not provide effective access to the automated systems that require the caller to respond by pushing a button on a touch tone phone, (2) cannot operate fast enough to convey messages on answering machines, or to permit a TDD user to leave a recorded message, and (3) are not appropriate for calling crisis lines relating to such matters as rape, domestic violence, child abuse, and drugs where confidentiality is a concern. The Department believes that it is more appropriate for the Federal Communications Commission to address these issues in its rulemaking under title IV.

A public accommodation is, however, required to make a TDD available to an individual with impaired hearing or speech, if it customarily offers telephone service to its customers, clients, patients, or participants on more than an incidental convenience basis. Where entry to a place of public accommodation requires use of a security entrance telephone, a TDD or other effective means of communication must be provided for use by an individual with impaired hearing or speech.

In other words, individual retail stores, doctors' offices, restaurants, or similar establishments are not required by this section to have TDD's, because TDD users will be able to make inquiries, appointments, or reservations with such establishments through the relay system established under title IV of the ADA. The public accommodation will likewise be able to contact TDD users through the relay system. On the other hand, hotels, hospitals, and other similar establishments that offer nondisabled individuals the opportunity to make outgoing telephone calls on more than an incidental convenience basis must provide a TDD on request.

Section 36.303(e) requires places of lodging that provide televisions in five or more guest rooms and hospitals to provide, upon request, a means for decoding closed captions for use by an individual with impaired hearing. Hotels should also provide a TDD or similar device at the front desk in order to take calls from guests who use TDD's in their rooms. In this way guests with hearing impairments can avail themselves of such hotel services as making inquiries of the front desk and ordering room service. The term ''hospital'' is used in its general sense and should be interpreted broadly.

Movie theaters are not required by §36.303 to present open-captioned films. However, other public accommodations that impart verbal information through soundtracks on films, video tapes, or slide shows are required to make such information accessible to persons with hearing impairments. Captioning is one means to make the information accessible to individuals with disabilities.

The rule specifies that auxiliary aids and services include the acquisition or modification of equipment or devices. For example, tape players used for an audio-guided tour of a museum exhibit may require the addition of Brailled adhesive labels to the buttons on a reasonable number of the tape players to

facilitate their use by individuals who are blind. Similarly, a hotel conference center may need to provide permanent or portable assistive listening systems for persons with hearing impairments.

As provided in §36.303(f), a public accommodation is not required to provide any particular aid or service that would result either in a fundamental alteration in the nature of the goods, services, facilities, privileges, advantages, or accommodations offered or in an undue burden. Both of these statutory limitations are derived from existing regulations and caselaw under section 504 and are to be applied on a case-by-case basis (see, e.g., 28 CFR 39.160(d) and *Southeastern Community College* v. *Davis*, 442 U.S. 397 (1979)). Congress intended that ''undue burden'' under §36.303 and ''undue hardship,'' which is used in the employment provisions of title I of the ADA, should be determined on a case-by-case basis under the same standards and in light of the same factors (Judiciary report at 59). The rule, therefore, in accordance with the definition of undue hardship in section 101(10) of the ADA, defines undue burden as ''significant difficulty or expense'' (see §§36.104 and 36.303(a)) and requires that undue burden be determined in light of the factors listed in the definition in 36.104.

Consistent with regulations implementing section 504 in federally conducted programs (see, e.g., 28 CFR 39.160(d)), §36.303(f) provides that the fact that the provision of a particular auxiliary aid or service would result in an undue burden does not relieve a public accommodation from the duty to furnish an alternative auxiliary aid or service, if available, that would not result in such a burden.

Section 36.303(g) of the proposed rule has been deleted from this section and included in a new §36.306. That new section continues to make clear that the auxiliary aids requirement does not mandate the provision of individually prescribed devices, such as prescription eyeglasses or hearing aids.

The costs of compliance with the requirements of this section may not be financed by surcharges limited to particular individuals with disabilities or any group of individuals with disabilities (§36.301(c)).

Section 36.304 Removal of Barriers

Section 36.304 requires the removal of architectural barriers and communication barriers that are structural in nature in existing facilities, where such removal is readily achievable, i.e., easily accomplishable and able to be carried out without much difficulty or expense. This requirement is based on section 302(b)(2)(A)(iv) of the ADA.

A number of commenters interpreted the phrase ''communication barriers that are structural in nature'' broadly to encompass the provision of communications devices such as TDD's, telephone handset amplifiers, assistive listening devices, and digital check-out displays. The statute, however, as read by the Department, limits the application of the phrase ''communications barriers that are structural in nature'' to those barriers that are an integral part of the physical structure of a facility. In addition to the communications barriers posed by permanent signage and alarm systems noted by Congress (see Education and Labor report at 110), the Department would also include among the communications barriers covered by §36.304 the failure to provide adequate sound buffers, and the presence of physical partitions that hamper the passage of sound waves between employees and customers. Given that §36.304's proper focus is on the removal of physical barriers, the Department believes that the obligation to provide communications equipment and devices such as TDD's, telephone handset amplifiers, assistive listening devices, and digital check-out displays is more appropriately determined by the requirements for auxiliary aids and services under §36.303 (see Education and Labor report at 107–108). The obligation to remove communications barriers that are structural in nature under §36.304, of course, is independent of any obligation to provide auxiliary aids and services under §36.303.

The statutory provision also requires the readily achievable removal of certain barriers in existing vehicles and rail passenger cars. This transportation requirement is not included in §36.304, but rather in §36.310(b) of the rule.

In striking a balance between guaranteeing access to individuals with disabilities and recognizing the legitimate cost concerns of businesses and other private entities, the ADA establishes different standards for existing facilities and new construction. In existing facilities, which are the subject of §36.304, where retrofitting may prove costly, a less rigorous degree of accessibility is required than in the case of new construction and alterations (see §§36.401–36.406) where accessibility can be more conveniently and economically incorporated in the initial stages of design and construction.

For example, a bank with existing automatic teller machines (ATM's) would have to remove barriers to the use of the ATM's, if it is readily achievable to do so. Whether or not it is necessary to take actions such as ramping a few steps or raising or lowering an ATM would be determined by whether the actions can be accomplished easily and without much difficulty or expense.

On the other hand, a newly constructed bank with ATM's would be required by §36.401 to have an ATM that is ''readily accessible to and usable by'' persons with disabilities in accordance with accessibility guidelines incorporated under §36.406.

The requirement to remove architectural barriers includes the removal of physical

barriers of any kind. For example, §36.304 requires the removal, when readily achievable, of barriers caused by the location of temporary or movable structures, such as furniture, equipment, and display racks. In order to provide access to individuals who use wheelchairs, for example, restaurants may need to rearrange tables and chairs, and department stores may need to reconfigure display racks and shelves. As stated in §36.304(f), such actions are not readily achievable to the extent that they would result in a significant loss of selling or serving space. If the widening of all aisles in selling or serving areas is not readily achievable, then selected widening should be undertaken to maximize the amount of merchandise or the number of tables accessible to individuals who use wheelchairs. Access to goods and services provided in any remaining inaccessible areas must be made available through alternative methods to barrier removal, as required by §36.305.

Because the purpose of title III of the ADA is to ensure that public accommodations are accessible to their customers, clients, or patrons (as opposed to their employees, who are the focus of title I), the obligation to remove barriers under §36.304 does not extend to areas of a facility that are used exclusively as employee work areas.

Section 36.304(b) provides a wide-ranging list of the types of modest measures that may be taken to remove barriers and that are likely to be readily achievable. The list includes examples of measures, such as adding raised letter markings on elevator control buttons and installing flashing alarm lights, that would be used to remove communications barriers that are structural in nature. It is not an exhaustive list, but merely an illustrative one. Moreover, the inclusion of a measure on this list does not mean that it is readily achievable in all cases. Whether or not any of these measures is readily achievable is to be determined on a case-by-case basis in light of the particular circumstances presented and the factors listed in the definition of readily achievable (§36.104).

A public accommodation generally would not be required to remove a barrier to physical access posed by a flight of steps, if removal would require extensive ramping or an elevator. Ramping a single step, however, will likely be readily achievable, and ramping several steps will in many circumstances also be readily achievable. The readily achievable standard does not require barrier removal that requires extensive restructuring or burdensome expense. Thus, where it is not readily achievable to do, the ADA would not require a restaurant to provide access to a restroom reachable only by a flight of stairs.

Like §36.405, this section permits deference to the national interest in preserving significant historic structures. Barrier removal would not be considered ''readily achievable'' if it would threaten or destroy the historic significance of a building or facility that is eligible for listing in the National Register of Historic Places under the National Historic Preservation Act (16 U.S.C. 470, *et seq.*), or is designated as historic under State or local law.

The readily achievable defense requires a less demanding level of exertion by a public accommodation than does the undue burden defense to the auxiliary aids requirements of §36.303. In that sense, it can be characterized as a ''lower'' standard than the undue burden standard. The readily achievable defense is also less demanding than the undue hardship defense in section 102(b)(5) of the ADA, which limits the obligation to make reasonable accommodation in employment. Barrier removal measures that are not easily accomplishable and are not able to be carried out without much difficulty or expense are not required under the readily achievable standard, even if they do not impose an undue burden or an undue hardship.

Section 36.304(f)(1) of the proposed rule, which stated that ''barrier removal is not readily achievable if it would result in significant loss of profit or significant loss of efficiency of operation,'' has been deleted from the final rule. Many commenters objected to this provision because it impermissibly introduced the notion of profit into a statutory standard that did not include it. Concern was expressed that, in order for an action not to be considered readily achievable, a public accommodation would inappropriately have to show, for example, not only that the action could not be done without ''much difficulty or expense'', but that a significant loss of profit would result as well. In addition, some commenters asserted use of the word ''significant,'' which is used in the definition of undue hardship under title I (the standard for interpreting the meaning of undue burden as a defense to title III's auxiliary aids requirements) (see §§36.104, 36.303(f)), blurs the fact that the readily achievable standard requires a lower level of effort on the part of a public accommodation than does the undue burden standard.

The obligation to engage in readily achievable barrier removal is a continuing one. Over time, barrier removal that initially was not readily achievable may later be required because of changed circumstances. Many commenters expressed support for the Department's position that the obligation to comply with §36.304 is continuing in nature. Some urged that the rule require public accommodations to assess their compliance on at least an annual basis in light of changes in resources and other factors that would be relevant to determining what barrier removal measures would be readily achievable.

Although the obligation to engage in readily achievable barrier removal is clearly a continuing duty, the Department has declined to establish any independent requirement for an annual assessment or self-evaluation. It is best left to the public accommodations subject to §36.304 to establish policies to assess compliance that are appropriate to the particular circumstances faced by the wide range of public accommodations covered by the ADA. However, even in the absence of an explicit regulatory requirement for periodic self-evaluations, the Department still urges public accommodations to establish procedures for an ongoing assessment of their compliance with the ADA's barrier removal requirements. The Department recommends that this process include appropriate consultation with individuals with disabilities or organizations representing them. A serious effort at self-assessment and consultation can diminish the threat of litigation and save resources by identifying the most efficient means of providing required access.

The Department has been asked for guidance on the best means for public accommodations to comply voluntarily with this section. Such information is more appropriately part of the Department's technical assistance effort and will be forthcoming over the next several months. The Department recommends, however, the development of an implementation plan designed to achieve compliance with the ADA's barrier removal requirements before they become effective on January 26, 1992. Such a plan, if appropriately designed and diligently executed, could serve as evidence of a good faith effort to comply with the requirements of §36.104. In developing an implementation plan for readily achievable barrier removal, a public accommodation should consult with local organizations representing persons with disabilities and solicit their suggestions for cost-effective means of making individual places of public accommodation accessible. Such organizations may also be helpful in allocating scarce resources and establishing priorities. Local associations of businesses may want to encourage this process and serve as the forum for discussions on the local level between disability rights organizations and local businesses.

Section 36.304(c) recommends priorities for public accommodations in removing barriers in existing facilities. Because the resources available for barrier removal may not be adequate to remove all existing barriers at any given time, §36.304(c) suggests priorities for determining which types of barriers should be mitigated or eliminated first. The purpose of these priorities is to facilitate long-term business planning and to maximize, in light of limited resources, the degree of effective access that will result from any given level of expenditure.

Although many commenters expressed support for the concept of establishing priorities, a significant number objected to their mandatory nature in the proposed rule. The Department shares the concern of these commenters that mandatory priorities would increase the likelihood of litigation and inappropriately reduce the discretion of public accommodations to determine the most effective mix of barrier removal measures to undertake in particular circumstances. Therefore, in the final rule the priorities are no longer mandatory.

In response to comments that the priorities failed to address communications issues, the Department wishes to emphasize that the priorities encompass the removal of communications barriers that are structural in nature. It would be counter to the ADA's carefully wrought statutory scheme to include in this provision the wide range of communication devices that are required by the ADA's provisions on auxiliary aids and services. The final rule explicitly includes Brailled and raised letter signage and visual alarms among the examples of steps to remove barriers provided in §36.304(c)(2).

Section 36.304(c)(1) places the highest priority on measures that will enable individuals with disabilities to physically enter a place of public accommodation. This priority on ''getting through the door'' recognizes that providing actual physical access to a facility from public sidewalks, public transportation, or parking is generally preferable to any alternative arrangements in terms of both business efficiency and the dignity of individuals with disabilities.

The next priority, which is established in §36.304(c)(2), is for measures that provide access to those areas of a place of public accommodation where goods and services are made available to the public. For example, in a hardware store, to the extent that it is readily achievable to do so, individuals with disabilities should be given access not only to assistance at the front desk, but also access, like that available to other customers, to the retail display areas of the store.

The Department agrees with those commenters who argued that access to the areas where goods and services are provided is generally more important than the provision of restrooms. Therefore, the final rule reverses priorities two and three of the proposed rule in order to give lower priority to accessible restrooms. Consequently, the third priority in the final rule (§36.304(c)(3)) is for measures to provide access to restroom facilities and the last priority is placed on any remaining measures required to remove barriers.

Section 36.304(d) requires that measures taken to remove barriers under §36.304 be subject to subpart D's requirements for alterations (except for the path of travel requirements in §36.403). It only permits deviations from the subpart D requirements

when compliance with those requirements is not readily achievable. In such cases, §36.304(d) permits measures to be taken that do not fully comply with the subpart D requirements, so long as the measures do not pose a significant risk to the health or safety of individuals with disabilities or others.

This approach represents a change from the proposed rule which stated that ''readily achievable'' measures taken solely to remove barriers under §36.304 are exempt from the alterations requirements of subpart D. The intent of the proposed rule was to maximize the flexibility of public accommodations in undertaking barrier removal by allowing deviations from the technical standards of subpart D. It was thought that allowing slight deviations would provide access and release additional resources for expanding the amount of barrier removal that could be obtained under the readily achievable standard.

Many commenters, however, representing both businesses and individuals with disabilities, questioned this approach because of the likelihood that unsafe or ineffective measures would be taken in the absence of the subpart D standards for alterations as a reference point. Some advocated a rule requiring strict compliance with the subpart D standard.

The Department in the final rule has adopted the view of many commenters that (1) public accommodations should in the first instance be required to comply with the subpart D standards for alterations where it is readily achievable to do so and (2) safe, readily achievable measures must be taken when compliance with the subpart D standards is not readily achievable. Reference to the subpart D standards in this manner will promote certainty and good design at the same time that permitting slight deviations will expand the amount of barrier removal that may be achieved under §36.304.

Because of the inconvenience to individuals with disabilities and the safety problems involved in the use of portable ramps, §36.304(e) permits the use of a portable ramp to comply with §36.304(a) only when installation of a permanent ramp is not readily achievable. In order to promote safety, §36.304(e) requires that due consideration be given to the incorporation of features such as nonslip surfaces, railings, anchoring, and strength of materials in any portable ramp that is used.

Temporary facilities brought in for use at the site of a natural disaster are subject to the barrier removal requirements of §36.304.

A number of commenters requested clarification regarding how to determine when a public accommodation has discharged its obligation to remove barriers in existing facilities. For example, is a hotel required by §36.304 to remove barriers in all of its guest rooms? Or is some lesser percentage adequate? A new paragraph (g) has been added to §36.304 to address this issue. The Department believes that the degree of barrier removal required under §36.304 may be less, but certainly would not be required to exceed, the standards for alterations under the ADA Accessibility Guidelines incorporated by subpart D of this part (ADAAG). The ADA's requirements for readily achievable barrier removal in existing facilities are intended to be substantially less rigorous than those for new construction and alterations. It, therefore, would be obviously inappropriate to require actions under §36.304 that would exceed the ADAAG requirements. Hotels, then, in order to satisfy the requirements of §36.304, would not be required to remove barriers in a higher percentage of rooms than required by ADAAG. If relevant standards for alterations are not provided in ADAAG, then reference should be made to the standards for new construction.

Section 36.305 Alternatives to Barrier Removal

Section 36.305 specifies that where a public accommodation can demonstrate that removal of a barrier is not readily achievable, the public accommodation must make its goods, services, facilities, privileges, advantages, or accommodations available through alternative methods, if such methods are readily achievable. This requirement is based on section 302(b)(2)(A)(v) of the ADA.

For example, if it is not readily achievable for a retail store to raise, lower, or remove shelves or to rearrange display racks to provide accessible aisles, the store must, if readily achievable, provide a clerk or take other alternative measures to retrieve inaccessible merchandise. Similarly, if it is not readily achievable to ramp a long flight of stairs leading to the front door of a restaurant or a pharmacy, the restaurant or the pharmacy must take alternative measures, if readily achievable, such as providing curb service or home delivery. If, within a restaurant, it is not readily achievable to remove physical barriers to a certain section of a restaurant, the restaurant must, where it is readily achievable to do so, offer the same menu in an accessible area of the restaurant.

Where alternative methods are used to provide access, a public accommodation may not charge an individual with a disability for the costs associated with the alternative method (see §36.301(c)). Further analysis of the issue of charging for alternative measures may be found in the preamble discussion of §36.301(c).

In some circumstances, because of security considerations, some alternative methods may not be readily achievable. The rule does not require a cashier to leave his or her post to retrieve items for individuals with disabilities, if there are no other employees on duty.

Section 36.305(c) of the proposed rule has been deleted and the requirements have been included in a new §36.306. That section makes clear that the alternative methods requirement does not mandate the provision of personal devices, such as wheelchairs, or services of a personal nature.

In the final rule, §36.305(c) provides specific requirements regarding alternatives to barrier removal in multiscreen cinemas. In some situations, it may not be readily achievable to remove enough barriers to provide access to all of the theaters of a multiscreen cinema. If that is the case, §36.305(c) requires the cinema to establish a film rotation schedule that provides reasonable access for individuals who use wheelchairs to films being presented by the cinema. It further requires that reasonable notice be provided to the public as to the location and time of accessible showings. Methods for providing notice include appropriate use of the international accessibility symbol in a cinema's print advertising and the addition of accessibility information to a cinema's recorded telephone information line.

Section 36.306 Personal Devices and Services

The final rule includes a new §36.306, entitled ''Personal devices and services.'' Section 36.306 of the proposed rule, ''Readily achievable and undue burden: Factors to be considered,'' was deleted for the reasons described in the preamble discussion of the definition of the term ''readily achievable'' in §36.104. In place of §§36.303(g) and 36.305(c) of the proposed rule, which addressed the issue of personal devices and services in the contexts of auxiliary aids and alternatives to barrier removal, §36.306 provides a general statement that the regulation does not require the provision of personal devices and services. This section states that a public accommodation is not required to provide its customers, clients, or participants with personal devices, such as wheelchairs; individually prescribed devices, such as prescription eyeglasses or hearing aids; or services of a personal nature including assistance in eating, toileting, or dressing.

This statement serves as a limitation on all the requirements of the regulation. The personal devices and services limitation was intended to have general application in the proposed rule in all contexts where it was relevant. The final rule, therefore, clarifies, this point by including a general provision that will explicitly apply not just to auxiliary aids and services and alternatives to barrier removal, but across-the-board to include such relevant areas as modifications in policies, practices, and procedures (§36.302) and examinations and courses (§36.309), as well.

The Department wishes to clarify that measures taken as alternatives to barrier removal, such as retrieving items from shelves or providing curb service or home delivery, are not to be considered personal services. Similarly, minimal actions that may be required as modifications in policies, practices, or procedures under §36.302, such as a waiter's removing the cover from a customer's straw, a kitchen's cutting up food into smaller pieces, or a bank's filling out a deposit slip, are not services of a personal nature within the meaning of §36.306. (Of course, such modifications may be required under §36.302 only if they are ''reasonable.'') Similarly, this section does not preclude the short-term loan of personal receivers that are part of an assistive listening system.

Of course, if personal services are customarily provided to the customers or clients of a public accommodation, e.g., in a hospital or senior citizen center, then these personal services should also be provided to persons with disabilities using the public accommodation.

Section 36.307 Accessible or Special Goods.

Section 36.307 establishes that the rule does not require a public accommodation to alter its inventory to include accessible or special goods with accessibility features that are designed for, or facilitate use by, individuals with disabilities. As specified in §36.307(c), accessible or special goods include such items as Brailled versions of books, books on audio-cassettes, closed captioned video tapes, special sizes or lines of clothing, and special foods to meet particular dietary needs.

The purpose of the ADA's public accommodations requirements is to ensure accessibility to the goods offered by a public accommodation, not to alter the nature or mix of goods that the public accommodation has typically provided. In other words, a bookstore, for example, must make its facilities and sales operations accessible to individuals with disabilities, but is not required to stock Brailled or large print books. Similarly, a video store must make its facilities and rental operations accessible, but is not required to stock closed-captioned video tapes. The Department has been made aware, however, that the most recent titles in videotape rental establishments are, in fact, closed captioned.

Although a public accommodation is not required by §36.307(a) to modify its inventory, it is required by §36.307(b), at the request of an individual with disabilities, to order accessible or special goods that it does not customarily maintain in stock if, in the normal course of its operation, it makes special orders for unstocked goods, and if the accessible or special goods can be obtained from a supplier with whom the public accommodation customarily does business. For example, a clothing store would be required to order specially-sized clothing at the request

of an individual with a disability, if it customarily makes special orders for clothing that it does not keep in stock, and if the clothing can be obtained from one of the store's customary suppliers.

One commenter asserted that the proposed rule could be interpreted to require a store to special order accessible or special goods of all types, even if only one type is specially ordered in the normal course of its business. The Department, however, intends for §36.307(b) to require special orders only of those particular types of goods for which a public accommodation normally makes special orders. For example, a book and recording store would not have to specially order Brailled books if, in the normal course of its business, it only specially orders recordings and not books.

Section 36.308 Seating in Assembly Areas.

Section 36.308 establishes specific requirements for removing barriers to physical access in assembly areas, which include such facilities as theaters, concert halls, auditoriums, lecture halls, and conference rooms. This section does not address the provision of auxiliary aids or the removal of communications barriers that are structural in nature. These communications requirements are the focus of other provisions of the regulation (see §§36.303–36.304).

Individuals who use wheelchairs historically have been relegated to inferior seating in the back of assembly areas separate from accompanying family members and friends. The provisions of §36.308 are intended to promote integration and equality in seating.

In some instances it may not be readily achievable for auditoriums or theaters to remove seats to allow individuals with wheelchairs to sit next to accompanying family members or friends. In these situations, the final rule retains the requirement that the public accommodation provide portable chairs or other means to allow the accompanying individuals to sit with the persons in wheelchairs. Persons in wheelchairs should have the same opportunity to enjoy movies, plays, and similar events with their families and friends, just as other patrons do. The final rule specifies that portable chairs or other means to permit family members or companions to sit with individuals who use wheelchairs must be provided only when it is readily achievable to do so.

In order to facilitate seating of wheelchair users who wish to transfer to existing seating, paragraph (a)(1) of the final rule adds a requirement that, to the extent readily achievable, a reasonable number of seats with removable aisle-side armrests must be provided. Many persons in wheelchairs are able to transfer to existing seating with this relatively minor modification. This solution avoids the potential safety hazard created by the use of portable chairs and fosters integration. The final ADA Accessibility Guidelines incorporated by subpart D (ADAAG) also add a requirement regarding aisle seating that was not in the proposed guidelines. In situations when a person in a wheelchair transfers to existing seating, the public accommodation shall provide assistance in handling the wheelchair of the patron with the disability.

Likewise, consistent vith ADAAG, the final rule adds in §36.308(a)(1)(ii)(B) a requirement that, to the extent readily achievable, wheelchair seating provide lines of sight and choice of admission prices comparable to those for members of the general public.

Finally, because Congress intended that the requirements for barrier removal in existing facilities be substantially less rigorous than those required for new construction and alterations, the final rule clarifies in §36.308(a)(3) that in no event can the requirements for existing facilities be interpreted to exceed the standards for alterations under ADAAG. For example, §4.33 of ADAAG only requires wheelchair spaces to be provided in more than one location when the seating capacity of the assembly area exceeds 300. Therefore, paragraph (a) of §36.308 may not be interpreted to require readily achievable dispersal of wheelchair seating in assembly areas with 300 or fewer seats. Similarly, §4.1.3(19) of ADAAG requires six accessible wheelchair locations in an assembly area with 301 to 500 seats. The reasonable number of wheelchair locations required by paragraph (a), therefore, may be less than six, but may not be interpreted to exceed six.

Proposed Section 36.309 Purchase of Furniture and Equipment

Section 36.309 of the proposed rule would have required that newly purchased furniture or equipment made available for use at a place of public accommodation be accessible, to the extent such furniture or equipment is available, unless this requirement would fundamentally alter the goods, services, facilities, privileges, advantages, or accommodations offered, or would not be readily achievable. Proposed §36.309 has been omitted from the final rule because the Department has determined that its requirements are more properly addressed under other sections, and because there are currently no appropriate accessibility standards addressing many types of furniture and equipment.

Some types of equipment will be required to meet the accessibility requirements of subpart D. For example, ADAAG establishes technical and scoping requirements in new construction and alterations for automated teller machines and telephones. Purchase or modification of equipment is required in certain instances by the provisions in §§36.201 and 36.202. For example, an arcade may need

to provide accessible video machines in order to ensure full and equal enjoyment of the facilities and to provide an opportunity to participate in the services and facilities it provides. The barrier removal requirements of §36.304 will apply as well to furniture and equipment (lowering shelves, rearranging furniture, adding Braille labels to a vending machine).

Section 36.309 Examinations and Courses

Section 36.309(a) sets forth the general rule that any private entity that offers examinations or courses related to applications, licensing, certification, or credentialing for secondary or postsecondary education, professional, or trade purposes shall offer such examinations or courses in a place and manner accessible to persons with disabilities or offer alternative accessible arrangements for such individuals.

Paragraph (a) restates section 309 of the Americans with Disabilities Act. Section 309 is intended to fill the gap that is created when licensing, certification, and other testing authorities are not covered by section 504 of the Rehabilitation Act or title II of the ADA. Any such authority that is covered by section 504, because of the receipt of Federal money, or by title II, because it is a function of a State or local government, must make all of its programs accessible to persons with disabilities, which includes physical access as well as modifications in the way the test is administered, e.g., extended time, written instructions, or assistance of a reader.

Many licensing, certification, and testing authorities are not covered by section 504, because no Federal money is received; nor are they covered by title II of the ADA because they are not State or local agencies. However, States often require the licenses provided by such authorities in order for an individual to practice a particular profession or trade. Thus, the provision was included in the ADA in order to assure that persons with disabilities are not foreclosed from educational, professional, or trade opportunities because an examination or course is conducted in an inaccessible site or without needed modifications.

As indicated in the ''Application'' section of this part (§36.102), §36.309 applies to any private entity that offers the specified types of examinations or courses. This is consistent with section 309 of the Americans with Disabilities Act, which states that the requirements apply to ''any person'' offering examinations or courses.

The Department received a large number of comments on this section, reflecting the importance of ensuring that the key gateways to education and employment are open to individuals with disabilities. The most frequent comments were objections to the fundamental alteration and undue burden provisions in §§36.309 (b)(3) and (c)(3) and to allowing courses and examinations to be provided through alternative accessible arrangements, rather than in an integrated setting.

Although section 309 of the Act does not refer to a fundamental alteration or undue burden limitation, those limitations do appear in section 302(b)(2)(A)(iii) of the Act, which establishes the obligation of public accommodations to provide auxiliary aids and services. The Department, therefore, included it in the paragraphs of §36.309 requiring the provision of auxiliary aids. One commenter argued that similar limitations should apply to all of the requirements of §36.309, but the Department did not consider this extension appropriate.

Commenters who objected to permitting ''alternative accessible arrangements'' argued that such arrangements allow segregation and should not be permitted, unless they are the least restrictive available alternative, for example, for someone who cannot leave home. Some commenters made a distinction between courses, where interaction is an important part of the educational experience, and examinations, where it may be less important. Because the statute specifically authorizes alternative accessible arrangements as a method of meeting the requirements of section 309, the Department has not adopted this suggestion. The Department notes, however, that, while examinations of the type covered by §36.309 may not be covered elsewhere in the regulation, courses will generally be offered in a ''place of education,'' which is included in the definition of ''place of public accommodation'' in §36.104, and, therefore, will be subject to the integrated setting requirement of §36.203.

Section 36.309(b) sets forth specific requirements for examinations. Examinations covered by this section would include a bar exam or the Scholastic Aptitude Test prepared by the Educational Testing Service. Paragraph (b)(1) is adopted from the Department of Education's section 504 regulation on admission tests to postsecondary educational programs (34 CFR 104.42(b)(3)). Paragraph (b)(1)(i) requires that a private entity offering an examination covered by the section must assure that the examination is selected and administered so as to best ensure that the examination accurately reflects an individual's aptitude or achievement level or other factor the examination purports to measure, rather than reflecting the individual's impaired sensory, manual, or speaking skills (except where those skills are the factors that the examination purports to measure).

Paragraph (b)(1)(ii) requires that any examination specially designed for individuals with disabilities be offered as often and in as timely a manner as other examinations. Some commenters noted that persons with disabilities may be required to travel long

distances when the locations for examinations for individuals with disabilities are limited, for example, to only one city in a State instead of a variety of cities. The Department has therefore revised this paragraph to add a requirement that such examinations be offered at locations that are as convenient as the location of other examinations.

Commenters representing organizations that administer tests wanted to be able to require individuals with disabilities to provide advance notice and appropriate documentation, at the applicants' expense, of their disabilities and of any modifications or aids that would be required. The Department agrees that such requirements are permissible, provided that they are not unreasonable and that the deadline for such notice is no earlier than the deadline for others applying to take the examination. Requiring individuals with disabilities to file earlier applications would violate the requirement that examinations designed for individuals with disabilities be offered in as timely a manner as other examinations.

Examiners may require evidence that an applicant is entitled to modifications or aids as required by this section, but requests for documentation must be reasonable and must be limited to the need for the modification or aid requested. Appropriate documentation might include a letter from a physician or other professional, or evidence of a prior diagnosis or accommodation, such as eligibility for a special education program. The applicant may be required to bear the cost of providing such documentation, but the entity administering the examination cannot charge the applicant for the cost of any modifications or auxiliary aids, such as interpreters, provided for the examination.

Paragraph (b)(1)(iii) requires that examinations be administered in facilities that are accessible to individuals with disabilities or alternative accessible arrangements are made.

Paragraph (b)(2) gives examples of modifications to examinations that may be necessary in order to comply with this section. These may include providing more time for completion of the examination or a change in the manner of giving the examination, e.g., reading the examination to the individual.

Paragraph (b)(3) requires the provision of auxiliary aids and services, unless the private entity offering the examination can demonstrate that offering a particular auxiliary aid would fundamentally alter the examination or result in an undue burden. Examples of auxiliary aids include taped examinations, interpreters or other effective methods of making aurally delivered materials available to individuals with hearing impairments, readers for individuals with visual impairments or learning disabilities, and other similar services and actions. The suggestion that individuals with learning disabilities may need readers is included, although it does not appear in the Department of Education regulation, because, in fact, some individuals with learning disabilities have visual perception problems and would benefit from a reader.

Many commenters pointed out the importance of ensuring that modifications provide the individual with a disability an equal opportunity to demonstrate his or her knowledge or ability. For example, a reader who is unskilled or lacks knowledge of specific terminology used in the examination may be unable to convey the information in the questions or to follow the applicant's instructions effectively. Commenters pointed out that, for persons with visual impairments who read Braille, Braille provides the closest functional equivalent to a printed test. The Department has, therefore, added Brailled examinations to the examples of auxiliary aids and services that may be required. For similar reasons, the Department also added to the list of examples of auxiliary aids and services large print examinations and answer sheets; ''qualified'' readers; and transcribers to write answers.

A commenter suggested that the phrase ''fundamentally alter the examination'' in this paragraph of the proposed rule be revised to more accurately reflect the function affected. In the final rule the Department has substituted the phrase ''fundamentally alter the measurement of the skills or knowledge the examination is intended to test.''

Paragraph (b)(4) gives examples of alternative accessible arrangements. For instance, the private entity might be required to provide the examination at an individual's home with a proctor. Alternative arrangements must provide conditions for individuals with disabilities that are comparable to the conditions under which other individuals take the examinations. In other words, an examination cannot be offered to an individual with a disability in a cold, poorly lit basement, if other individuals are given the examination in a warm, well lit classroom.

Some commenters who provide examinations for licensing or certification for particular occupations or professions urged that they be permitted to refuse to provide modifications or aids for persons seeking to take the examinations if those individuals, because of their disabilities, would be unable to perform the essential functions of the profession or occupation for which the examination is given, or unless the disability is reasonably determined in advance as not being an obstacle to certification. The Department has not changed its rule based on this comment. An examination is one stage of a licensing or certification process. An individual should not be barred from attempting

to pass that stage of the process merely because he or she might be unable to meet other requirements of the process. If the examination is not the first stage of the qualification process, an applicant may be required to complete the earlier stages prior to being admitted to the examination. On the other hand, the applicant may not be denied admission to the examination on the basis of doubts about his or her abilities to meet requirements that the examination is not designed to test.

Paragraph (c) sets forth specific requirements for courses. Paragraph (c)(1) contains the general rule that any course covered by this section must be modified to ensure that the place and manner in which the course is given is accessible. Paragraph (c)(2) gives examples of possible modifications that might be required, including extending the time permitted for completion of the course, permitting oral rather than written delivery of an assignment by a person with a visual impairment, or adapting the manner in which the course is conducted (i.e., providing cassettes of class handouts to an individual with a visual impairment). In response to comments, the Department has added to the examples in paragraph (c)(2) specific reference to distribution of course materials. If course materials are published and available from other sources, the entity offering the course may give advance notice of what materials will be used so as to allow an individual to obtain them in Braille or on tape but materials provided by the course offerer must be made available in alternative formats for individuals with disabilities.

In language similar to that of paragraph (b), paragraph (c)(3) requires auxiliary aids and services, unless a fundamental alteration or undue burden would result, and paragraph (c)(4) requires that courses be administered in accessible facilities. Paragraph (c)(5) gives examples of alternative accessible arrangements. These may include provision of the course through videotape, cassettes, or prepared notes. Alternative arrangements must provide comparable conditions to those provided to others, including similar lighting, room temperature, and the like. An entity offering a variety of courses, to fulfill continuing education requirements for a profession, for example, may not limit the selection or choice of courses available to individuals with disabilities.

Section 36.310 Transportation Provided by Public Accommodations

Section 36.310 contains specific provisions relating to public accommodations that provide transportation to their clients or customers. This section has been substantially revised in order to coordinate the requirements of this section with the requirements applicable to these transportation systems that will be contained in the regulations issued by the Secretary of Transportation pursuant to section 306 of the ADA, to be codified at 49 CFR part 37. The Department notes that, although the responsibility for issuing regulations applicable to transportation systems operated by public accommodations is divided between this Department and the Department of –Transportation, enforcement authority is assigned only to the Department of Justice.

The Department received relatively few comments on this section of the proposed rule. Most of the comments addressed issues that are not specifically addressed in this part, such as the standards for accessible vehicles and the procedure for determining whether equivalent service is provided. Those standards will be contained in the regulation issued by the Department of Transportation. Other commenters raised questions about the types of transportation that will be subject to this section. In response to these inquiries, the Department has revised the list of examples contained in the regulation.

Paragraph (a)(1) states the general rule that covered public accommodations are subject to all of the specific provisions of subparts B, C, and D, except as provided in §36.310. Examples of operations covered by the requirements are listed in paragraph (a)(2). The stated examples include hotel and motel airport shuttle services, customer shuttle bus services operated by private companies and shopping centers, student transportation, and shuttle operations of recreational facilities such as stadiums, zoos, amusement parks, and ski resorts. This brief list is not exhaustive. The section applies to any fixed route or demand responsive transportation system operated by a public accommodation for the benefit of its clients or customers. The section does not apply to transportation services provided only to employees. Employee transportation will be subject to the regulations issued by the Equal Employment Opportunity Commission to implement title I of the Act. However, if employees and customers or clients are served by the same transportation system, the provisions of this section will apply.

Paragraph (b) specifically provides that a public accommodation shall remove transportation barriers in existing vehicles to the extent that it is readily achievable to do so, but that the installation of hydraulic or other lifts is not required.

Paragraph (c) provides that public accommodations subject to this section shall comply with the requirements for transportation vehicles and systems contained in the regulations issued by the Secretary of Transportation.

Subpart D—New Construction and Alterations

Subpart D implements section 303 of the Act, which requires that newly constructed or altered places of public accommodation or commercial facilities be readily accessible to and usable by individuals with disabilities. This requirement contemplates a high degree of convenient access. It is intended to ensure that patrons and employees of places of public accommodation and employees of commercial facilities are able to get to, enter, and use the facility.

Potential patrons of places of public accommodation, such as retail establishments, should be able to get to a store, get into the store, and get to the areas where goods are being provided. Employees should have the same types of access, although those individuals require access to and around the employment area as well as to the area in which goods and services are provided.

The ADA is geared to the future—its goal being that, over time, access will be the rule, rather than the exception. Thus, the Act only requires modest expenditures, of the type addressed in §36.304 of this part, to provide access to existing facilities not otherwise being altered, but requires all new construction and alterations to be accessible.

The Act does not require new construction or alterations; it simply requires that, when a public accommodation or other private entity undertakes the construction or alteration of a facility subject to the Act, the newly constructed or altered facility must be made accessible. This subpart establishes the requirements for new construction and alterations.

As explained under the discussion of the definition of ''facility,'' §36.104, pending development of specific requirements, the Department will not apply this subpart to places of public accommodation located in mobile units, boats, or other conveyances.

Section 36.401 New Construction

General

Section 36.401 implements the new construction requirements of the ADA. Section 303 (a)(1) of the Act provides that discrimination for purposes of section 302(a) of the Act includes a failure to design and construct facilities for first occupancy later than 30 months after the date of enactment (i.e., after January 26, 1993) that are readily accessible to and usable by individuals with disabilities.

Paragraph 36.401(a)(1) restates the general requirement for accessible new construction. The proposed rule stated that ''any public accommodation or other private entity responsible for design and construction'' must ensure that facilities conform to this requirement. Various commenters suggested that the proposed language was not consistent with the statute because it substituted ''private entity responsible for design and construction'' for the statutory language; because it did not address liability on the part of architects, contractors, developers, tenants, owners, and other entities; and because it limited the liability of entities responsible for commercial facilities. In response, the Department has revised this paragraph to repeat the language of section 303(a) of the ADA. The Department will interpret this section in a manner consistent with the intent of the statute and with the nature of the responsibilities of the various entities for design, for construction, or for both.

Designed and Constructed for First Occupancy

According to paragraph (a)(2), a facility is subject to the new construction requirements only if a completed application for a building permit or permit extension is filed after January 26, 1992, and the facility is occupied after January 26, 1993.

The proposed rule set forth for comment two alternative ways by which to determine what facilities are subject to the Act and what standards apply. Paragraph (a)(2) of the final rule is a slight variation on Option One in the proposed rule. The reasons for the Department's choice of Option One are discussed later in this section.

Paragraph (a)(2) acknowledges that Congress did not contemplate having actual occupancy be the sole trigger for the accessibility requirements, because the statute prohibits a failure to ''design and construct for first occupancy,'' rather than requiring accessibility in facilities actually occupied after a particular date.

The commenters overwhelmingly agreed with the Department's proposal to use a date certain; many cited the reasons given in the preamble to the proposed rule. First, it is helpful for designers and builders to have a fixed date for accessible design, so that they can determine accessibility requirements early in the planning and design stage. It is difficult to determine accessibility requirements in anticipation of the actual date of first occupancy because of unpredictable and uncontrollable events (e.g., strikes affecting suppliers or labor, or natural disasters) that may delay occupancy. To redesign or reconstruct portions of a facility if it begins to appear that occupancy will be later than anticipated would be quite costly. A fixed date also assists those responsible for enforcing, or monitoring compliance with, the statute, and those protected by it.

The Department considered using as a trigger date for application of the accessibility standards the date on which a permit is granted. The Department chose instead the date on which a complete permit application is certified as received by the appropriate

government entity. Almost all commenters agreed with this choice of a trigger date. This decision is based partly on information that several months or even years can pass between application for a permit and receipt of a permit. Design is virtually complete at the time an application is complete (i.e., certified to contain all the information required by the State, county, or local government). After an application is filed, delays may occur before the permit is granted due to numerous factors (not necessarily relating to accessibility): for example, hazardous waste discovered on the property, flood plain requirements, zoning disputes, or opposition to the project from various groups. These factors should not require redesign for accessibility if the application was completed before January 26, 1992. However, if the facility must be redesigned for other reasons, such as a change in density or environmental preservation, and the final permit is based on a new application, the rule would require accessibility if that application was certified complete after January 26, 1992.

The certification of receipt of a complete application for a building permit is an appropriate point in the process because certifications are issued in writing by governmental authorities. In addition, this approach presents a clear and objective standard.

However, a few commenters pointed out that in some jurisdictions it is not possible to receive a ''certification'' that an application is complete, and suggested that in those cases the fixed date should be the date on which an application for a permit is received by the government agency. The Department has included such a provision in §36.401(a)(2)(i).

The date of January 26, 1992, is relevant only with respect to the last application for a permit or permit extension for a facility. Thus, if an entity has applied for only a ''foundation'' permit, the date of that permit application has no effect, because the entity must also apply for and receive a permit at a later date for the actual superstructure. In this case, it is the date of the later application that would control, unless construction is not completed within the time allowed by the permit, in which case a third permit would be issued and the date of the application for that permit would be determinative for purposes of the rule.

Choice of Option One for Defining ''Designed and Constructed for First Occupancy''

Under the option the Department has chosen for determining applicability of the new construction standards, a building would be considered to be ''for first occupancy'' after January 26, 1993, only (1) if the last application for a building permit or permit extension for the facility is certified to be complete (or, in some jurisdictions, received) by a State, county, or local government after January 26, 1992, and (2) if the first certificate of occupancy is issued after January 26, 1993. The Department also asked for comment on an Option Two, which would have imposed new construction requirements if a completed application for a building permit or permit extension was filed after the enactment of the ADA (July 26, 1990), and the facility was occupied after January 26, 1993.

The request for comment on this issue drew a large number of comments expressing a wide range of views. Most business groups and some disability rights groups favored Option One, and some business groups and most disability rights groups favored Option Two. Individuals and government entities were equally divided; several commenters proposed other options.

Those favoring Option One pointed out that it is more reasonable in that it allows time for those subject to the new construction requirements to anticipate those requirements and to receive technical assistance pursuant to the Act. Numerous commenters said that time frames for designing and constructing some types of facilities (for example, health care facilities) can range from two to four years or more. They expressed concerns that Option Two, which would apply to some facilities already under design or construction as of the date the Act was signed, and to some on which construction began shortly after enactment, could result in costly redesign or reconstruction of those facilities. In the same vein, some Option One supporters found Option Two objectionable on due process grounds. In their view, Option Two would mean that in July 1991 (upon issuance of the final DOJ rule) the responsible entities would learn that ADA standards had been in effect since July 26, 1990, and this would amount to retroactive application of standards. Numerous commenters characterized Option Two as having no support in the statute and Option One as being more consistent with congressional intent.

Those who favored Option Two pointed out that it would include more facilities within the coverage of the new construction standards. They argued that because similar accessibility requirements are in effect under State laws, no hardship would be imposed by this option. Numerous commenters said that hardship would also be eliminated in light of their view that the ADA requires compliance with the Uniform Federal Accessibility Standards (UFAS) until issuance of DOJ standards. Those supporting Option Two claimed that it was more consistent with the statute and its legislative history.

The Department has chosen Option One rather than Option Two, primarily on the

basis of the language of three relevant sections of the statute. First, section 303(a) requires compliance with accessibility standards set forth, or incorporated by reference in, regulations to be issued by the Department of Justice. Standing alone, this section cannot be read to require compliance with the Department's standards before those standards are issued (through this rulemaking). Second, according to section 310 of the statute, section 303 becomes effective on January 26, 1992. Thus, section 303 cannot impose requirements on the design of buildings before that date. Third, while section 306(d) of the Act requires compliance with UFAS if final regulations have not been issued, that provision cannot reasonably be read to take effect until July 26, 1991, the date by which the Department of Justice must issue final regulations under title III.

Option Two was based on the premise that the interim standards in section 306(d) take effect as of the ADA's enactment (July 26, 1990), rather than on the date by which the Department of Justice regulations are due to be issued (July 26, 1991). The initial clause of section 306(d)(1) itself is silent on this question:

If final regulations have not been issued pursuant to this section, for new construction for which a * * * building permit is obtained prior to the issuance of final regulations * * * (interim standards apply).

The approach in Option Two relies partly on the language of section 310 of the Act, which provides that section 306, the interim standards provision, takes effect on the date of enactment. Under this interpretation the interim standards provision would prevail over the operative provision, section 303, which requires that new construction be accessible and which becomes effective January 26, 1992. This approach would also require construing the language of section 306(d)(1) to take effect before the Department's standards are due to be issued. The preferred reading of section 306 is that it would require that, if the Department's final standards had not been issued by July 26, 1991, UFAS would apply to certain buildings until such time as the Department's standards were issued.

General Substantive Requirements of the New Construction Provisions

The rule requires, as does the statute, that covered newly constructed facilities be readily accessible to and usable by individuals with disabilities. The phrase ''readily accessible to and usable by individuals with disabilities'' is a term that, in slightly varied formulations, has been used in the Architectural Barriers Act of 1968, the Fair Housing Act, the regulations implementing section 504 of the Rehabilitation Act of 1973, and current accessibility standards. It means, with respect to a facility or a portion of a facility, that it can be approached, entered, and used by individuals with disabilities (including mobility, sensory, and cognitive impairments) easily and conveniently. A facility that is constructed to meet the requirements of the rule's accessibility standards will be considered readily accessible and usable with respect to construction. To the extent that a particular type or element of a facility is not specifically addressed by the standards, the language of this section is the safest guide.

A private entity that renders an ''accessible'' building inaccessible in its operation, through policies or practices, may be in violation of section 302 of the Act. For example, a private entity can render an entrance to a facility inaccessible by keeping an accessible entrance open only during certain hours (whereas the facility is available to others for a greater length of time). A facility could similarly be rendered inaccessible if a person with disabilities is significantly limited in her or his choice of a range of accommodations.

Ensuring access to a newly constructed facility will include providing access to the facility from the street or parking lot, to the extent the responsible entity has control over the route from those locations. In some cases, the private entity will have no control over access at the point where streets, curbs, or sidewalks already exist, and in those instances the entity is encouraged to request modifications to a sidewalk, including installation of curb cuts, from a public entity responsible for them. However, as some commenters pointed out, there is no obligation for a private entity subject to title III of the ADA to seek or ensure compliance by a public entity with title II. Thus, although a locality may have an obligation under title II of the Act to install curb cuts at a particular location, that responsibility is separate from the private entity's title III obligation, and any involvement by a private entity in seeking cooperation from a public entity is purely voluntary in this context.

Work Areas

Proposed paragraph 36.401(b) addressed access to employment areas, rather than to the areas where goods or services are being provided. The preamble noted that the proposed paragraph provided guidance for new construction and alterations until more specific guidance was issued by the ATBCB and reflected in this Department's regulation. The entire paragraph has been deleted from this section in the final rule. The concepts of paragraphs (b) (1), (2), and (5) of the proposed rule are included, with modifications and expansion, in ADAAG. Paragraphs (3) and (4) of the proposed rule, concerning fixtures and equipment, are not included in the rule or in ADAAG.

Some commenters asserted that questions relating to new construction and alterations of work areas should be addressed by the

EEOC under title I, as employment concerns. However, the legislative history of the statute clearly indicates that the new construction and alterations requirements of title III were intended to ensure accessibility of new facilities to all individuals, including employees. The language of section 303 sweeps broadly in its application to all public accommodations and commercial facilities. EEOC's title I regulations will address accessibility requirements that come into play when ''reasonable accommodation'' to individual employees or applicants with disabilities is mandated under title I.

The issues dealt with in proposed §36.401(b)(1) and (2) are now addressed in ADAAG section 4.1.1(3). The Department's proposed paragraphs would have required that areas that will be used only by employees as work stations be constructed so that individuals with disabilities could approach, enter, and exit the areas. They would not have required that all individual work stations be constructed or equipped (for example, with shelves that are accessible or adaptable) to be accessible. This approach was based on the theory that, as long as an employee with disabilities could enter the building and get to and around the employment area, modifications in a particular work station could be instituted as a ''reasonable accommodation'' to that employee if the modifications were necessary and they did not constitute an undue hardship.

Almost all of the commenters agreed with the proposal to require access to a work area but not to require accessibility of each individual work station. This principle is included in ADAAG 4.1.1(3). Several of the comments related to the requirements of the proposed ADAAG and have been addressed in the accessibility standards.

Proposed paragraphs (b) (3) and (4) would have required that consideration be given to placing fixtures and equipment at accessible heights in the first instance, and to purchasing new equipment and fixtures that are adjustable. These paragraphs have not been included in the final rule because the rule in most instances does not establish accessibility standards for purchased equipment. (See discussion elsewhere in the preamble of proposed §36.309.) While the Department encourages entities to consider providing accessible or adjustable fixtures and equipment for employees, this rule does not require them to do so.

Paragraph (b)(5) of proposed §36.401 clarified that proposed paragraph (b) did not limit the requirement that employee areas other than individual work stations must be accessible. For example, areas that are employee ''common use'' areas and are not solely used as work stations (e.g., employee lounges, cafeterias, health units, exercise facilities) are treated no differently under this regulation than other parts of a building; they must be constructed or altered in compliance with the accessibility standards. This principle is not stated in §36.401 but is implicit in the requirements of this section and ADAAG.

Commercial Facilities in Private Residences

Section 36.401(b) of the final rule is a new provision relating to commercial facilities located in private residences. The proposed rule addressed these requirements in the preamble to §36.207, ''Places of public accommodation located in private residences.'' The preamble stated that the approach for commercial facilities would be the same as that for places of public accommodation, i.e., those portions used exclusively as a commercial facility or used as both a commercial facility and for residential purposes would be covered. Because commercial facilities are only subject to new construction and alterations requirements, however, the covered portions would only be subject to subpart D. This approach is reflected in §36.401(b)(1).

The Department is aware that the statutory definition of ''commercial facility'' excludes private residences because they are ''expressly exempted from coverage under the Fair Housing Act of 1968, as amended.'' However, the Department interprets that exemption as applying only to facilities that are exclusively residential. When a facility is used as both a residence and a commercial facility, the exemption does not apply.

Paragraph (b)(2) is similar to the new paragraph (b) under §36.207, ''Places of public accommodation located in private residences.'' The paragraph clarifies that the covered portion includes not only the space used as a commercial facility, but also the elements used to enter the commercial facility, e.g., the homeowner's front sidewalk, if any; the doorway; the hallways; the restroom, if used by employees or visitors of the commercial facility; and any other portion of the residence, interior or exterior, used by employees or visitors of the commercial facility.

As in the case of public accommodations located in private residences, the new construction standards only apply to the extent that a portion of the residence is designed or intended for use as a commercial facility. Likewise, if a homeowner alters a portion of his home to convert it to a commercial facility, that work must be done in compliance with the alterations standards in appendix A.

Structural Impracticability

Proposed §36.401(c) is included in the final rule with minor changes. It details a statutory exception to the new construction requirement: the requirement that new construction be accessible does not apply where

an entity can demonstrate that it is structurally impracticable to meet the requirements of the regulation. This provision is also included in ADAAG, at section 4.1.1(5)(a).

Consistent with the legislative history of the ADA, this narrow exception will apply only in rare and unusual circumstances where unique characteristics of terrain make accessibility unusually difficult. Such limitations for topographical problems are analogous to an acknowledged limitation in the application of the accessibility requirements of the Fair Housing Amendments Act (FHAA) of 1988.

Almost all commenters supported this interpretation. Two commenters argued that the DOJ requirement is too limiting and would not exempt some buildings that should be exempted because of soil conditions, terrain, and other unusual site conditions. These commenters suggested consistency with HUD's Fair Housing Accessibility Guidelines (56 FR 9472 (1991)), which generally would allow exceptions from accessibility requirements, or allow compliance with less stringent requirements, on sites with slopes exceeding 10%.

The Department is aware of the provisions in HUD's guidelines, which were issued on March 6, 1991, after passage of the ADA and publication of the Department's proposed rule. The approach taken in these guidelines, which apply to different types of construction and implement different statutory requirements for new construction, does not bind this Department in regulating under the ADA. The Department has included in the final rule the substance of the proposed provision, which is faithful to the intent of the statute, as expressed in the legislative history. (See Senate report at 70–71; Education and Labor report at 120.)

The limited structural impracticability exception means that it is acceptable to deviate from accessibility requirements only where unique characteristics of terrain prevent the incorporation of accessibility features and where providing accessibility would destroy the physical integrity of a facility. A situation in which a building must be built on stilts because of its location in marshlands or over water is an example of one of the few situations in which the exception for structural impracticability would apply.

This exception to accessibility requirements should not be applied to situations in which a facility is located in ''hilly'' terrain or on a plot of land upon which there are steep grades. In such circumstances, accessibility can be achieved without destroying the physical integrity of a structure, and is required in the construction of new facilities.

Some commenters asked for clarification concerning when and how to apply the ADA rules or the Fair Housing Accessibility Guidelines, especially when a facility may be subject to both because of mixed use. Guidance on this question is provided in the discussion of the definitions of place of public accommodation and commercial facility. With respect to the structural impracticability exception, a mixed-use facility could not take advantage of the Fair Housing exemption, to the extent that it is less stringent than the ADA exemption, except for those portions of the facility that are subject only to the Fair Housing Act.

As explained in the preamble to the proposed rule, in those rare circumstances in which it is structurally impracticable to achieve full compliance with accessibility retirements under the ADA, places of public accommodation and commercial facilities should still be designed and constructed to incorporate accessibility features to the extent that the features are structurally practicable. The accessibility requirements should not be viewed as an all-or-nothing proposition in such circumstances.

If it is structurally impracticable for a facility in its entirety to be readily accessible to and usable by people with disabilities, then those portions that can be made accessible should be made accessible. If a building cannot be constructed in compliance with the full range of accessibility requirements because of structural impracticability, then it should still incorporate those features that are structurally practicable. If it is structurally impracticable to make a particular facility accessible to persons who have particular types of disabilities, it is still appropriate to require it to be made accessible to persons with other types of disabilities. For example, a facility that is of necessity built on stilts and cannot be made accessible to persons who use wheelchairs because it is structurally impracticable to do so, must be made accessible for individuals with vision or hearing impairments or other kinds of disabilities.

Elevator Exemption

Section 36.401(d) implements the ''elevator exemption'' for new construction in section 303(b) of the ADA. The elevator exemption is an exception to the general requirement that new facilities be readily accessible to and usable by individuals with disabilities. Generally, an elevator is the most common way to provide individuals who use wheelchairs ''ready access'' to floor levels above or below the ground floor of a multi-story building. Congress, however, chose not to require elevators in new small buildings, that is, those with less than three stories or less than 3,000 square feet per story. In buildings eligible for the exemption, therefore, ''ready access'' from the building entrance to a floor above

or below the ground floor is not required, because the statute does not require that an elevator be installed in such buildings. The elevator exemption does not apply, however, to a facility housing a shopping center, a shopping mall, or the professional office of a health care provider, or other categories of facilities as determined by the Attorney General. For example, a new office building that will have only two stories, with no elevator planned, will not be required to have an elevator, even if each story has 20,000 square feet. In other words, having either less than 3000 square feet per story or less than three stories qualifies a facility for the exemption; it need not qualify for the exemption on both counts. Similarly, a facility that has five stories of 2800 square feet each qualifies for the exemption. If a facility has three or more stories at any point, it is not eligible for the elevator exemption unless all the stories are less than 3000 square feet.

The terms ''shopping center or shopping mall'' and ''professional office of a health care provider'' are defined in this section. They are substantively identical to the definitions included in the proposed rule in §36.104, ''Definitions.'' They have been moved to this section because, as commenters pointed out, they are relevant only for the purposes of the elevator exemption, and inclusion in the general definitions section could give the incorrect impression that an office of a health care provider is not covered as a place of public accommodation under other sections of the rule, unless the office falls within the definition.

For purposes of §36.401, a ''shopping center or shopping mall'' is (1) a building housing five or more sales or rental establishments, or (2) a series of buildings on a common site, either under common ownership or common control or developed either as one project or as a series of related projects, housing five or more sales or rental establishments. The term ''shopping center or shopping mall'' only includes floor levels containing at least one sales or rental establishment, or any floor level that was designed or intended for use by at least one sales or rental establishment.

Any sales or rental establishment of the type that is included in paragraph (5) of the definition of ''place of public accommodation'' (for example, a bakery, grocery store, clothing store, or hardware store) is considered a sales or rental establishment for purposes of this definition; the other types of public accommodations (e.g., restaurants, laundromats, banks, travel services, health spas) are not.

In the preamble to the proposed rule, the Department sought comment on whether the definition of ''shopping center or mall'' should be expanded to include any of these other types of public accommodations. The Department also sought comment on whether a series of buildings should fall within the definition only if they are physically connected.

Most of those responding to the first question (overwhelmingly groups representing people with disabilities, or individual commenters) urged that the definition encompass more places of public accommodation, such as restaurants, motion picture houses, laundromats, dry cleaners, and banks. They pointed out that often it is not known what types of establishments will be tenants in a new facility. In addition, they noted that malls are advertised as entities, that their appeal is in the ''package'' of services offered to the public, and that this package often includes the additional types of establishments mentioned.

Commenters representing business groups sought to exempt banks, travel services, grocery stores, drug stores, and freestanding retail stores from the elevator requirement. They based this request on the desire to continue the practice in some locations of incorporating mezzanines housing administrative offices, raised pharmacist areas, and raised areas in the front of supermarkets that house safes and are used by managers to oversee operations of check-out aisles and other functions. Many of these concerns are adequately addressed by ADAAG. Apart from those addressed by ADAAG, the Department sees no reason to treat a particular type of sales or rental establishment differently from any other. Although banks and travel services are not included as ''sales or rental establishments,'' because they do not fall under paragraph (5) of the definition of place of public accommodation, grocery stores and drug stores are included.

The Department has declined to include places of public accommodation other than sales or rental establishments in the definition. The statutory definition of ''public accommodation'' (section 301(7)) lists 12 types of establishments that are considered public accommodations. Category (E) includes ''a bakery, grocery store, clothing store, hardware store, shopping center, or other sales or rental establishment.'' This arrangement suggests that it is only these types of establishments that would make up a shopping center for purposes of the statute. To include all types of places of public accommodation, or those from 6 or 7 of the categories, as commenters suggest, would overly limit the elevator exemption; the universe of facilities covered by the definition of ''shopping center'' could well exceed the number of multitenant facilities *not* covered, which would render the exemption almost meaningless.

For similar reasons, the Department is retaining the requirement that a building or series of buildings must house five or more sales or rental establishments before it falls within the definition of ''shopping center.''

Numerous commenters objected to the number and requested that the number be lowered from five to three or four. Lowering the number in this manner would include an inordinately large number of two-story multi-tenant buildings within the category of those required to have elevators.

The responses to the question concerning whether a series of buildings should be connected in order to be covered were varied. Generally, disability rights groups and some government agencies said a series of buildings should not have to be connected, and pointed to a trend in some areas to build shopping centers in a garden or village setting. The Department agrees that this design choice should not negate the elevator requirement for new construction. Some business groups answered the question in the affirmative, and some suggested a different definition of shopping center. For example, one commenter recommended the addition of a requirement that the five or more establishments be physically connected on the non-ground floors by a common pedestrian walkway or pathway, because otherwise a series of stand-alone facilities would have to comply with the elevator requirement, which would be unduly burdensome and perhaps infeasible. Another suggested use of what it characterized as the standard industry definition: ''A group of retail stores and related business facilities, the whole planned, developed, operated and managed as a unit.'' While the rule's definition would reach a series of related projects that are under common control but were not developed as a single project, the Department considers such a facility to be a shopping center within the meaning of the statute. However, in light of the hardship that could confront a series of existing small stand-alone buildings if elevators were required in alterations, the Department has included a common access route in the definition of shopping center or shopping mall for purposes of § 36.404.

Some commenters suggested that access to restrooms and other shared facilities open to the public should be required even if those facilities were not on a shopping floor. Such a provision with respect to toilet or bathing facilities is included in the elevator exception in final ADAAG 4.1.3(5).

For purposes of this subpart, the rule does not distinguish between a ''shopping mall'' (usually a building with a roofed-over common pedestrian area serving more than one tenant in which a majority of the tenants have a main entrance from the common pedestrian area) and a ''shopping center'' (e.g., a ''shopping strip''). Any facility housing five or more of the types of sales or rental establishments described, regardless of the number of other types of places of public accommodation housed there (e.g., offices, movie theatres, restaurants), is a shopping center or shopping mall.

For example, a two-story facility built for mixed-use occupancy on both floors (e.g., by sales and rental establishments, a movie theater, restaurants, and general office space) is a shopping center or shopping mall if it houses five or more sales or rental establishments. If none of these establishments is located on the second floor, then only the ground floor, which contains the sales or rental establishments, would be a ''shopping center or shopping mall,'' unless the second floor was designed or intended for use by at least one sales or rental establishment. In determining whether a floor was intended for such use, factors to be considered include the types of establishments that first occupied the floor, the nature of the developer's marketing strategy, i.e., what types of establishments were sought, and inclusion of any design features particular to rental and sales establishments.

A ''professional office of a health care provider'' is defined as a location where a person or entity regulated by a State to provide professional services related to the physical or mental health of an individual makes such services available to the public. In a two-story development that houses health care providers only on the ground floor, the ''professional office of a health care provider'' is limited to the ground floor unless the second floor was designed or intended for use by a health care provider. In determining if a floor was intended for such use, factors to be considered include whether the facility was constructed with special plumbing, electrical, or other features needed by health care providers, whether the developer marketed the facility as a medical office center, and whether any of the establishments that first occupied the floor was, in fact, a health care provider.

In addition to requiring that a building that is a shopping center, shopping mall, or the professional office of a health care provider have an elevator regardless of square footage or number of floors, the ADA (section 303(b)) provides that the Attorney General may determine that a particular category of facilities requires the installation of elevators based on the usage of the facilities. The Department, as it proposed to do, has added to the nonexempt categories terminals, depots, or other stations used for specified public transportation, and airport passenger terminals. Numerous commenters in all categories endorsed this proposal; none opposed it. It is not uncommon for an airport passenger terminal or train station, for example, to have only two floors, with gates on both floors. Because of the significance of transportation, because a person with disabilities could be arriving or departing at any gate, and because inaccessible facilities could result in a total denial of transportation services, it is reasonable to require that newly constructed transit facilities be

accessible, regardless of square footage or number of floors. One comment suggested an amendment that would treat terminals and stations similarly to shopping centers, by requiring an accessible route only to those areas used for passenger loading and unloading and for other passenger services. Paragraph (d)(2)(ii) has been modified accordingly.

Some commenters suggested that other types of facilities (e.g., educational facilities, libraries, museums, commercial facilities, and social service facilities) should be included in the category of nonexempt facilities. The Department has not found adequate justification for including any other types of facilities in the nonexempt category at this time.

Section 36.401(d)(2) establishes the operative requirements concerning the elevator exemption and its application to shopping centers and malls, professional offices of health care providers, transit stations, and airport passenger terminals. Under the rule's framework, it is necessary first to determine if a new facility (including one or more buildings) houses places of public accommodation or commercial facilities that are in the categories for which elevators are required. If so, and the facility is a shopping center or shopping mall, or a professional office of a health care provider, then any area housing such an office or a sales or rental establishment or the professional office of a health care provider is not entitled to the elevator exemption.

The following examples illustrate the application of these principles:

1. A shopping mall has an upper and a lower level. There are two ''anchor stores'' (in this case, major department stores at either end of the mall, both with exterior entrances and an entrance on each level from the common area). In addition, there are 30 stores (sales or rental establishments) on the upper level, all of which have entrances from a common central area. There are 30 stores on the lower level, all of which have entrances from a common central area. According to the rule, elevator access must be provided to each store and to each level of the anchor stores. This requirement could be satisfied with respect to the 60 stores through elevators connecting the two pedestrian levels, provided that an individual could travel from the elevator to any other point on that level (i.e., into any store through a common pedestrian area) on an accessible path.

2. A commercial (nonresidential) ''townhouse'' development is composed of 20 two-story attached buildings. The facility is developed as one project, with common ownership, and the space will be leased to retailers. Each building has one accessible entrance from a pedestrian walk to the first floor. From that point, one can enter a store on the first floor, or walk up a flight of stairs to a store on the second floor. All 40 stores must be accessible at ground floor level or by accessible vertical access from that level. This does not mean, however, that 20 elevators must be installed. Access could be provided to the second floor by an elevator from the pedestrian area on the lower level to an upper walkway connecting all the areas on the second floor.

3. In the same type of development, it is planned that retail stores will be housed exclusively on the ground floor, with only office space (not professional offices of health care providers) on the second. Elevator access need not be provided to the second floor because all the sales or rental establishments (the entities that make the facility a shopping center) are located on an accessible ground floor.

4. In the same type of development, the space is designed and marketed as medical or office suites, or as a medical office facility. Accessible vertical access must be provided to all areas, as described in example 2.

Some commenters suggested that building owners who knowingly lease or rent space to nonexempt places of public accommodation would violate §36.401. However, the Department does not consider leasing or renting inaccessible space in itself to constitute a violation of this part. Nor does a change in use of a facility, with no accompanying alterations (e.g., if a psychiatrist replaces an attorney as a tenant in a second-floor office, but no alterations are made to the office) trigger accessibility requirements.

Entities cannot evade the requirements of this section by constructing facilities in such a way that no story is intended to constitute a ''ground floor.'' For example, if a private entity constructs a building whose main entrance leads only to stairways or escalators that connect with upper or lower floors, the Department would consider at least one level of the facility a ground story.

The rule requires in §36.401(d)(3), consistent with the proposed rule, that, even if a building falls within the elevator exemption, the floor or floors other than the ground floor must nonetheless be accessible, except for elevator access, to individuals with disabilities, including people who use wheelchairs. This requirement applies to buildings that do not house sales or rental establishments or the professional offices of a health care provider as well as to those in which such establishments or offices are all located on the ground floor. In such a situation, little added cost is entailed in making the second floor accessible, because it is similar in structure and floor plan to the ground floor.

There are several reasons for this provision. First, some individuals who are mobility impaired may work on a building's second floor, which they can reach by stairs and

the use of crutches; however, the same individuals, once they reach the second floor, may then use a wheelchair that is kept in the office. Secondly, because the first floor will be accessible, there will be little additional cost entailed in making the second floor, with the same structure and generally the same floor plan, accessible. In addition, the second floor must be accessible to those persons with disabilities who do not need elevators for level changes (for example, persons with sight or hearing impairments and those with certain mobility impairments). Finally, if an elevator is installed in the future for any reason, full access to the floor will be facilitated.

One commenter asserted that this provision goes beyond the Department's authority under the Act, and disagreed with the Department's claim that little additional cost would be entailed in compliance. However, the provision is taken directly from the legislative history (see Education and Labor report at 114).

One commenter said that where an elevator is not required, platform lifts should be required. Two commenters pointed out that the elevator exemption is really an exemption from the requirement for providing an accessible route to a second floor not served by an elevator. The Department agrees with the latter comment. Lifts to provide access between floors are not required in buildings that are not required to have elevators. This point is specifically addressed in the appendix to ADAAG (§4.1.3(5)). ADAAG also addresses in detail the situations in which lifts are permitted or required.

Section 36.402 Alterations

Sections 36.402–36.405 implement section 303(a)(2) of the Act, which requires that alterations to existing facilities be made in a way that ensures that the altered portion is readily accessible to and usable by individuals with disabilities. This part does not require alterations; it simply provides that when alterations are undertaken, they must be made in a manner that provides access.

Section 36.402(a)(1) provides that any alteration to a place of public accommodation or a commercial facility, after January 26, 1992, shall be made so as to ensure that, to the maximum extent feasible, the altered portions of the facility are readily accessible to and usable by individuals with disabilities, including individuals who use wheelchairs.

The proposed rule provided that an alteration would be deemed to be undertaken after January 26, 1992, if the physical alteration of the property is in progress after that date. Commenters pointed out that this provision would, in some cases, produce an unjust result by requiring the redesign or retrofitting of projects initiated before this part established the ADA accessibility standards. The Department agrees that the proposed rule would, in some instances, unfairly penalize projects that were substantially completed before the effective date. Therefore, paragraph (a)(2) has been revised to specify that an alteration will be deemed to be undertaken after January 26, 1992, if the physical alteration of the property begins after that date. As a matter of interpretation, the Department will construe this provision to apply to alterations that require a permit from a State, County or local government, if physical alterations pursuant to the terms of the permit begin after January 26, 1992. The Department recognizes that this application of the effective date may require redesign of some facilities that were planned prior to the publication of this part, but no retrofitting will be required of facilities on which the physical alterations were initiated prior to the effective date of the Act. Of course, nothing in this section in any way alters the obligation of any facility to remove architectural barriers in existing facilities to the extent that such barrier removal is readily achievable.

Paragraph (b) provides that, for the purposes of this part, an ''alteration'' is a change to a place of public accommodation or a commercial facility that affects or could affect the usability of the building or facility or any part thereof. One commenter suggested that the concept of usability should apply only to those changes that affect access by persons with disabilities. The Department remains convinced that the Act requires the concept of ''usability'' to be read broadly to include any change that affects the usability of the facility, not simply changes that relate directly to access by individuals with disabilities.

The Department received a significant number of comments on the examples provided in paragraphs (b)(1) and (b)(2) of the proposed rule. Some commenters urged the Department to limit the application of this provision to major structural modifications, while others asserted that it should be expanded to include cosmetic changes such as painting and wallpapering. The Department believes that neither approach is consistent with the legislative history, which requires this Department's regulation to be consistent with the accessibility guidelines (ADAAG) developed by the Architectural and Transportation Barriers Compliance Board (ATBCB). Although the legislative history contemplates that, in some instances, the ADA accessibility standards will exceed the current MGRAD requirements, it also clearly indicates the view of the drafters that ''minor changes such as painting or papering walls * * * do not affect usability'' (Education and Labor report at 111, Judiciary report at 64), and, therefore, are not alterations. The proposed rule was based on the existing MGRAD definition of ''alteration.''

The language of the final rule has been revised to be consistent with ADAAG, incorporated as appendix A to this part.

Some commenters sought clarification of the intended scope of this section. The proposed rule contained illustrations of changes that affect usability and those that do not. The intent of the illustrations was to explain the scope of the alterations requirement; the effect was to obscure it. As a result of the illustrations, some commenters concluded that any alteration to a facility, even a minor alteration such as relocating an electrical outlet, would trigger an extensive obligation to provide access throughout an entire facility. That result was never contemplated.

Therefore, in this final rule paragraph (b)(1) has been revised to include the major provisions of paragraphs (b)(1) and (b)(2) of the proposed rule. The examples in the proposed rule have been deleted. Paragraph (b)(1) now provides that alterations include, but are not limited to, remodeling, renovation, rehabilitation, reconstruction, historic restoration, changes or rearrangement in structural parts or elements, and changes or rearrangement in the plan configuration of walls and full-height partitions. Normal maintenance, reroofing, painting or wallpapering, asbestos removal, or changes to mechanical and electrical systems are not alterations unless they affect the usability of building or facility.

Paragraph (b)(2) of this final rule was added to clarify the scope of the alterations requirement. Paragraph (b)(2) provides that if existing elements, spaces, or common areas are altered, then each such altered element, space, or area shall comply with the applicable provisions of appendix A (ADAAG). As provided in §36.403, if an altered space or area is an area of the facility that contains a primary function, then the requirements of that section apply.

Therefore, when an entity undertakes a minor alteration to a place of public accommodation or commercial facility, such as moving an electrical outlet, the new outlet must be installed in compliance with ADAAG. (Alteration of the elements listed in §36.403(c)(2) cannot trigger a path of travel obligation.) If the alteration is to an area, such as an employee lounge or locker room, that is not an area of the facility that contains a primary function, that area must comply with ADAAG. It is only when an alteration affects access to or usability of an area containing a primary function, as opposed to other areas or the elements listed in §36.403(c)(2), that the path of travel to the altered area must be made accessible.

The Department received relatively few comments on paragraph (c), which explains the statutory phrase ''to the maximum extent feasible.'' Some commenters suggested that the regulation should specify that cost is a factor in determining whether it is feasible to make an altered area accessible. The legislative history of the ADA indicates that the concept of feasibility only reaches the question of whether it is possible to make the alteration accessible in compliance with this part. Costs are to be considered only when an alteration to an area containing a primary function triggers an additional requirement to make the path of travel to the altered area accessible.

Section 36.402(c) is, therefore, essentially unchanged from the proposed rule. At the recommendation of a commenter, the Department has inserted the word ''virtually'' to modify ''impossible'' to conform to the language of the legislative history. It explains that the phrase ''to the maximum extent feasible'' as used in this section applies to the occasional case where the nature of an existing facility makes it virtually impossible to comply fully with applicable accessibility standards through a planned alteration. In the occasional cases in which full compliance is impossible, alterations shall provide the maximum physical accessibility feasible. Any features of the facility that are being altered shall be made accessible unless it is technically infeasible to do so. If providing accessibility in conformance with this section to individuals with certain disabilities (e.g., those who use wheelchairs) would not be feasible, the facility shall be made accessible to persons with other types of disabilities (e.g., those who use crutches or who have impaired vision or hearing, or those who have other types of impairments).

Section 36.403 Alterations: Path of Travel

Section 36.403 implements the statutory requirement that any alteration that affects or could affect the usability of or access to an area of a facility that contains a primary function shall be made so as to ensure that, to the maximum extent feasible, the path of travel to the altered area, and the restrooms, telephones, and drinking fountains serving the altered area, are readily accessible to and usable by individuals with disabilities, including individuals who use wheelchairs, unless the cost and scope of such alterations is disproportionate to the cost of the overall alteration. Paragraph (a) restates this statutory requirement.

Paragraph (b) defines a ''primary function'' as a major activity for which the facility is intended. This paragraph is unchanged from the proposed rule. Areas that contain a primary function include, but are not limited to, the customer services lobby of a bank, the dining area of a cafeteria, the meeting rooms in a conference center, as well as offices and all other work areas in which the activities of the public accommodation or other private entities using the facility are

carried out. The concept of ''areas containing a primary function'' is analogous to the concept of ''functional spaces'' in §3.5 of the existing Uniform Federal Accessibility Standards, which defines ''functional spaces'' as ''[t]he rooms and spaces in a building or facility that house the major activities for which the building or facility is intended.''

Paragraph (b) provides that areas such as mechanical rooms, boiler rooms, supply storage rooms, employee lounges and locker rooms, janitorial closets, entrances, corridors, and restrooms are not areas containing a primary function. There may be exceptions to this general rule. For example, the availability of public restrooms at a place of public accommodation at a roadside rest stop may be a major factor affecting customers' decisions to patronize the public accommodation. In that case, a restroom would be considered to be an ''area containing a primary function'' of the facility.

Most of the commenters who addressed this issue supported the approach taken by the Department; but a few commenters suggested that areas not open to the general public or those used exclusively by employees should be excluded from the definition of primary function. The preamble to the proposed rule noted that the Department considered an alternative approach to the definition of ''primary function,'' under which a primary function of a commercial facility would be defined as a major activity for which the facility was intended, while a primary function of a place of public accommodation would be defined as an activity which involves providing significant goods, services, facilities, privileges, advantages, or accommodations. However, the Department concluded that, although portions of the legislative history of the ADA support this alternative, the better view is that the language now contained in §36.403(b) most accurately reflects congressional intent. No commenter made a persuasive argument that the Department's interpretation of the legislative history is incorrect.

When the ADA was introduced, the requirement to make alterations accessible was included in section 302 of the Act, which identifies the practices that constitute discrimination by a public accommodation. Because section 302 applies only to the operation of a place of public accommodation, the alterations requirement was intended only to provide access to clients and customers of a public accommodation. It was anticipated that access would be provided to employees with disabilities under the ''reasonable accommodation'' requirements of title I. However, during its consideration of the ADA, the House Judiciary Committee amended the bill to move the alterations provision from section 302 to section 303, which applies to commercial facilities as well as public accommodations. The Committee report accompanying the bill explains that:

New construction and alterations of both public accommodations and commercial facilities must be made readily accessible to and usable by individuals with disabilities * * *. Essentially, [this requirement] is designed to ensure that patrons *and employees* of public accommodations and commercial facilities are able to get to, enter and use the facility * * *. The rationale for making new construction accessible applies with equal force to alterations.

Judiciary report at 62–63 (emphasis added).

The ADA, as enacted, contains the language of section 303 as it was reported out of the Judiciary Committee. Therefore, the Department has concluded that the concept of ''primary function'' should be applied in the same manner to places of public accommodation and to commercial facilities, thereby including employee work areas in places of public accommodation within the scope of this section.

Paragraph (c) provides examples of alterations that affect the usability of or access to an area containing a primary function. The examples include: Remodeling a merchandise display area or employee work areas in a department store; installing a new floor surface to replace an inaccessible surface in the customer service area or employee work areas of a bank; redesigning the assembly line area of a factory; and installing a computer center in an accounting firm. This list is illustrative, not exhaustive. Any change that affects the usability of or access to an area containing a primary function triggers the statutory obligation to make the path of travel to the altered area accessible.

When the proposed rule was drafted, the Department believed that the rule made it clear that the ADA would require alterations to the path of travel only when such alterations are not disproportionate to the alteration to the primary function area. However, the comments that the Department received indicated that many commenters believe that even minor alterations to individual elements would require additional alterations to the path of travel. To address the concern of these commenters, a new paragraph (c)(2) has been added to the final rule to provide that alterations to such elements as windows, hardware, controls (e.g. light switches or thermostats), electrical outlets, or signage will not be deemed to be alterations that affect the usability of or access to an area containing a primary function. Of course, each element that is altered must comply with ADAAG (appendix A) . The cost of alterations to individual elements would be included in the overall cost of an alteration for purposes of determining disproportionality and would be counted

when determining the aggregate cost of a series of small alterations in accordance with §36.401(h) if the area is altered in a manner that affects access to or usability of an area containing a primary function.

Paragraph (d) concerns the respective obligations of landlords and tenants in the cases of alterations that trigger the path of travel requirement under §36.403. This paragraph was contained in the landlord/tenant section of the proposed rule, §36.201(b). If a tenant is making alterations upon its premises pursuant to terms of a lease that grant it the authority to do so (even if they constitute alterations that trigger the path of travel requirement), and the landlord is not making alterations to other parts of the facility, then the alterations by the tenant on its own premises do not trigger a path of travel obligation upon the landlord in areas of the facility under the landlord's authority that are not otherwise being altered. The legislative history makes clear that the path of travel requirement applies only to the entity that is already making the alteration, and thus the Department has not changed the final rule despite numerous comments suggesting that the tenant be required to provide a path of travel.

Paragraph (e) defines a ''path of travel'' as a continuous, unobstructed way of pedestrian passage by means of which an altered area may be approached, entered, and exited; and which connects the altered area with an exterior approach (including sidewalks, streets, and parking areas), an entrance to the facility, and other parts of the facility. This concept of an accessible path of travel is analogous to the concepts of ''accessible route'' and ''circulation path'' contained in section 3.5 of the current UFAS. Some commenters suggested that this paragraph should address emergency egress. The Department disagrees. ''Path of travel'' as it is used in this section is a term of art under the ADA that relates only to the obligation of the public accommodation or commercial facility to provide additional accessible elements when an area containing a primary function is altered. The Department recognizes that emergency egress is an important issue, but believes that it is appropriately addressed in ADAAG (appendix A), not in this paragraph. Furthermore, ADAAG does not require changes to emergency egress areas in alterations.

Paragraph (e)(2) is drawn from section 3.5 of UFAS. It provides that an accessible path of travel may consist of walks and sidewalks, curb ramps and other interior or exterior pedestrian ramps; clear floor paths through lobbies, corridors, rooms, and other improved areas; parking access aisles; elevators and lifts; or a combination of such elements. Paragraph (e)(3) provides that, for the purposes of this part, the term ''path of travel'' also includes the restrooms, telephones, and drinking fountains serving an altered area.

Although the Act establishes an expectation that an accessible path of travel should generally be included when alterations are made to an area containing a primary function, Congress recognized that, in some circumstances, providing an accessible path of travel to an altered area may be sufficiently burdensome in comparison to the alteration being undertaken to the area containing a primary function as to render this requirement unreasonable. Therefore, Congress provided, in section 303(a)(2) of the Act, that alterations to the path of travel that are disproportionate in cost and scope to the overall alteration are not required.

The Act requires the Attorney General to determine at what point the cost of providing an accessible path of travel becomes disproportionate. The proposed rule provided three options for making this determination.

Two committees of Congress specifically addressed this issue: the House Committee on Education and Labor and the House Committee on the Judiciary. The reports issued by each committee suggested that accessibility alterations to a path of travel might be ''disproportionate'' if they exceed 30% of the alteration costs (Education and Labor report at 113; Judiciary report at 64). Because the Department believed that smaller percentage rates might be appropriate, the proposed rule sought comments on three options: 10%, 20%, or 30%.

The Department received a significant number of comments on this section. Commenters representing individuals with disabilities generally supported the use of 30% (or more); commenters representing covered entities supported a figure of 10% (or less). The Department believes that alterations made to provide an accessible path of travel to the altered area should be deemed disproportionate to the overall alteration when the cost exceeds 20% of the cost of the alteration to the primary function area. This approach appropriately reflects the intent of Congress to provide access for individuals with disabilities without causing economic hardship for the covered public accommodations and commercial facilities.

The Department has determined that the basis for this cost calculation shall be the cost of the alterations to the area containing the primary function. This approach will enable the public accommodation or other private entity that is making the alteration to calculate its obligation as a percentage of a clearly ascertainable base cost, rather than as a percentage of the ''total'' cost, an amount that will change as accessibility alterations to the path of travel are made.

Paragraph (f)(2) (paragraph (e)(2) in the proposed rule) is unchanged. It provides examples of costs that may be counted as expenditures required to provide an accessible path of travel. They include:

• Costs associated with providing an accessible entrance and an accessible route to the altered area, for example, the cost of widening doorways or installing ramps;

• Costs associated with making restrooms accessible, such as installing grab bars, enlarging toilet stalls, insulating pipes, or installing accessible faucet controls;

• Costs associated with providing accessible telephones, such as relocating telephones to an accessible height, installing amplification devices, or installing telecommunications devices for deaf persons (TDD's);

• Costs associated with relocating an inaccessible drinking fountain.

Paragraph (f)(1) of the proposed rule provided that when the cost of alterations necessary to make the path of travel serving an altered area fully accessible is disproportionate to the cost of the overall alteration, the path of travel shall be made accessible to the maximum extent feasible. In response to the suggestion of a commenter, the Department has made an editorial change in the final rule (paragraph (g)(1)) to clarify that if the cost of providing a fully accessible path of travel is disproportionate, the path of travel shall be made accessible ''to the extent that it can be made accessible without incurring disproportionate costs.''

Paragraph (g)(2) (paragraph (f)(2) in the NPRM) establishes that priority should be given to those elements that will provide the greatest access, in the following order: An accessible entrance; an accessible route to the altered area; at least one accessible restroom for each sex or a single unisex restroom; accessible telephones; accessible drinking fountains; and, whenever possible, additional accessible elements such as parking, storage, and alarms. This paragraph is unchanged from the proposed rule.

Paragraph (h) (paragraph (g) in the proposed rule) provides that the obligation to provide an accessible path of travel may not be evaded by performing a series of small alterations to the area served by a single path of travel if those alterations could have been performed as a single undertaking. If an area containing a primary function has been altered without providing an accessible path of travel to serve that area, and subsequent alterations of that area, or a different area on the same path of travel, are undertaken within three years of the original alteration, the total cost of alterations to primary function areas on that path of travel during the preceding three year period shall be considered in determining whether the cost of making the path of travel serving that area accessible is disproportionate. Only alterations undertaken after January 26, 1992, shall be considered in determining if the cost of providing accessible features is disproportionate to the overall cost of the alterations.

Section 36.404 Alterations: Elevator Exemption

Section 36.404 implements the elevator exemption in section 303(b) of the Act as it applies to altered facilities. The provisions of section 303(b) are discussed in the preamble to §36.401(d) above. The statute applies the same exemption to both new construction and alterations. The principal difference between the requirements of §36.401(d) and §36.404 is that, in altering an existing facility that is not eligible for the statutory exemption, the public accommodation or other private entity responsible for the alteration is not required to install an elevator if the installation of an elevator would be disproportionate in cost and scope to the cost of the overall alteration as provided in §36.403(f)(1). In addition, the standards referenced in §36.406 (ADAAG) provide that installation of an elevator in an altered facility is not required if it is ''technically infeasible.''

This section has been revised to define the terms ''professional office of a health care provider'' and ''shopping center or shopping mall'' for the purposes of this section. The definition of ''professional office of a health care provider'' is identical to the definition included in §36.401(d).

It has been brought to the attention of the Department that there is some misunderstanding about the scope of the elevator exemption as it applies to the professional office of a health care provider. A public accommodation, such as the professional office of a health care provider, is required to remove architectural barriers to its facility to the extent that such barrier removal is readily achievable (see §36.304), but it is not otherwise required by this part to undertake new construction or alterations. This part does not require that an existing two story building that houses the professional office of a health care provider be altered for the purpose of providing elevator access. If, however, alterations to the area housing the office of the health care provider are undertaken for other purposes, the installation of an elevator might be required, but only if the cost of the elevator is not disproportionate to the cost of the overall alteration. Neither the Act nor this part prohibits a health care provider from locating his or her professional office in an existing facility that does not have an elevator.

Because of the unique challenges presented in altering existing facilities, the Department has adopted a definition of ''shopping center or shopping mall'' for the purposes of this section that is slightly different from the definition adopted under §36.401(d). For

the purposes of this section, a ''shopping center or shopping mall'' is (1) a building housing five or more sales or rental establishments, or (2) a series of buildings on a common site, connected by a common pedestrian access route above or below the ground floor, either under common ownership or common control or developed either as one project or as a series of related projects, housing five or more sales or rental establishments. As is the case with new construction, the term ''shopping center or shopping mall'' only includes floor levels housing at least one sales or rental establishment, or any floor level that was designed or intended for use by at least one sales or rental establishment.

The Department believes that it is appropriate to use a different definition of ''shopping center or shopping mall'' for this section than for §36.401, in order to make it clear that a series of existing buildings on a common site that is altered for the use of sales or rental establishments does not become a ''shopping center or shopping mall'' required to install an elevator, unless there is a common means of pedestrian access above or below the ground floor. Without this exemption, separate, but adjacent, buildings that were initially designed and constructed independently of each other could be required to be retrofitted with elevators, if they were later renovated for a purpose not contemplated at the time of construction.

Like §36.401(d), §36.404 provides that the exemptions in this paragraph do not obviate or limit in any way the obligation to comply with the other accessibility requirements established in this subpart. For example, alterations to floors above or below the ground floor must be accessible regardless of whether the altered facility has an elevator. If a facility that is not required to install an elevator nonetheless has an elevator, that elevator shall meet, to the maximum extent feasible, the accessibility requirements of this section.

Section 36.405 Alterations: Historic Preservation

Section 36.405 gives effect to the intent of Congress, expressed in section 504(c) of the Act, that this part recognize the national interest in preserving significant historic structures. Commenters criticized the Department's use of descriptive terms in the proposed rule that are different from those used in the ADA to describe eligible historic properties. In addition, some commenters criticized the Department's decision to use the concept of ''substantially impairing'' the historic features of a property, which is a concept employed in regulations implementing section 504 of the Rehabilitation Act of 1973. Those commenters recommended that the Department adopt the criteria of ''adverse effect'' published by the Advisory Council on Historic Preservation under the National Historic Preservation Act (36 CFR 800.9) as the standard for determining whether an historic property may be altered.

The Department agrees with these comments to the extent that they suggest that the language of the rule should conform to the language employed by Congress in the ADA. Therefore, the language of this section has been revised to make it clear that this provision applies to buildings or facilities that are eligible for listing in the National Register of Historic Places under the National Historic Preservation Act (16 U.S.C. 470 *et seq.*) and to buildings or facilities that are designated as historic under State or local law. The Department believes, however, that the criteria of adverse effect employed under the National Historic Preservation Act are inappropriate for this rule because section 504(c) of the ADA specifies that special alterations provisions shall apply only when an alteration would ''threaten or destroy the historic significance of qualified historic buildings and facilities.''

The Department intends that the exception created by this section be applied only in those very rare situations in which it is not possible to provide access to an historic property using the special access provisions in ADAAG. Therefore, paragraph (a) of §36.405 has been revised to provide that alterations to historic properties shall comply, to the maximum extent feasible, with section 4.1.7 of ADAAG. Paragraph (b) of this section has been revised to provide that if it has been determined, under the procedures established in ADAAG, that it is not feasible to provide physical access to an historic property that is a place of public accommodation in a manner that will not threaten or destroy the historic significance of the property, alternative methods of access shall be provided pursuant to the requirements of Subpart C.

Section 36.406 Standards for New Construction and Alterations

Section 36.406 implements the requirements of sections 306(b) and 306(c) of the Act, which require the Attorney General to promulgate standards for accessible design for buildings and facilities subject to the Act and this part that are consistent with the supplemental minimum guidelines and requirements for accessible design published by the Architectural and Transportation Barriers Compliance Board (ATBCB or Board) pursuant to section 504 of the Act. This section of the rule provides that new construction and alterations subject to this part shall comply with the standards for accessible design published as appendix A to this part.

Appendix A contains the Americans with Disabilities Act Accessibility Guidelines for

Buildings and Facilities (ADAAG) which is being published by the ATBCB as a final rule elsewhere in this issue of the FEDERAL REGISTER. As proposed in this Department's proposed rule, §36.406(a) adopts ADAAG as the accessibility standard applicable under this rule.

Paragraph (b) was not included in the proposed rule. It provides, in chart form, guidance for using ADAAG together with subparts A through D of this part when determining requirements for a particular facility. This chart is intended solely as guidance for the user; it has no effect for purposes of compliance or enforcement. It does not necessarily provide complete or mandatory information.

Proposed §36.406(b) is not included in the final rule. That provision, which would have taken effect only if the final rule had followed the proposed Option Two for §36.401(a), is unnecessary because the Department has chosen Option One, as explained in the preamble for that section.

Section 504(a) of the ADA requires the ATBCB to issue minimum guidelines to supplement the existing Minimum Guidelines and Requirements for Accessible Design (MGRAD) (36 CFR part 1190) for purposes of title III. According to section 504(b) of the Act, the guidelines are to establish additional requirements, consistent with the Act, ''to ensure that buildings and facilities are accessible, in terms of architecture and design, . . . and communication, to individuals with disabilities.'' Section 306(c) of the Act requires that the accessibility standards included in the Department's regulations be consistent with the minimum guidelines, in this case ADAAG.

As explained in the ATBCB's preamble to ADAAG, the substance and form of the guidelines are drawn from several sources. They use as their model the 1984 Uniform Federal Accessibility Standards (UFAS) (41 CFR part 101, subpart 101–19.6, appendix), which are the standards implementing the Architectural Barriers Act. UFAS is based on the Board's 1982 MGRAD. ADAAG follows the numbering system and format of the private sector American National Standard Institute's ANSI A117.1 standards. (American National Specifications for Making Buildings and Facilities Accessible to and Usable by Physically Handicapped People (ANSI A117–1980) and American National Standard for Buildings and Facilities—Providing Accessibility and Usability for Physically Handicapped People (ANSI A117.1–1986).) ADAAG supplements MGRAD. In developing ADAAG, the Board made every effort to be consistent with MGRAD and the current and proposed ANSI Standards, to the extent consistent with the ADA.

ADAAG consists of nine main sections and a separate appendix. Sections 1 through 3 contain general provisions and definitions. Section 4 contains scoping provisions and technical specifications applicable to all covered buildings and facilities. The scoping provisions are listed separately for new construction of sites and exterior facilities; new construction of buildings; additions; alterations; and alterations to historic properties. The technical specifications generally reprint the text and illustrations of the ANSI A117.1 standard, except where differences are noted by italics. Sections 5 through 9 of the guidelines are special application sections and contain additional requirements for restaurants and cafeterias, medical care facilities, business and mercantile facilities, libraries, and transient lodging. The appendix to the guidelines contains additional information to aid in understanding the technical specifications. The section numbers in the appendix correspond to the sections of the guidelines to which they relate. An asterisk after a section number indicates that additional information appears in the appendix.

ADAAG's provisions are further explained under Summary of ADAAG below.

GENERAL COMMENTS

One commenter urged the Department to move all or portions of subpart D, New Construction and Alterations, to the appendix (ADAAG) or to duplicate portions of subpart D in the appendix. The commenter correctly pointed out that subpart D is inherently linked to ADAAG, and that a self-contained set of rules would be helpful to users. The Department has attempted to simplify use of the two documents by deleting some paragraphs from subpart D (e.g., those relating to work areas), because they are included in ADAAG. However, the Department has retained in subpart D those sections that are taken directly from the statute or that give meaning to specific statutory concepts (e.g., structural impracticability, path of travel). While some of the subpart D provisions are duplicated in ADAAG, others are not. For example, issues relating to path of travel and disproportionality in alterations are not addressed in detail in ADAAG. (The structure and contents of the two documents are addressed below under Summary of ADAAG.) While the Department agrees that it would be useful to have one self-contained document, the different focuses of this rule and ADAAG do not permit this result at this time. However, the chart included in §36.406(b) should assist users in applying the provisions of subparts A through D, and ADAAG together.

Numerous business groups have urged the Department not to adopt the proposed ADAAG as the accessibility standards, because the requirements established are too high, reflect the ''state of the art,'' and are inflexible, rigid, and impractical. Many of these objections have been lodged on the

basis that ADAAG exceeds the statutory mandate to establish ''minimum'' guidelines. In the view of the Department, these commenters have misconstrued the meaning of the term ''minimum guidelines.'' The statute clearly contemplates that the guidelines establish a level of access—a minimum—that the standards must meet or exceed. The guidelines are not to be ''minimal'' in the sense that they would provide for a low level of access. To the contrary, Congress emphasized that the ADA requires a ''high degree of convenient access.'' Education and Labor report at 117–18. The legislative history explains that the guidelines may not ''reduce, weaken, narrow or set less accessibility standards than those included in existing MGRAD'' and should provide greater guidance in communication accessibility for individuals with hearing and vision impairments. Id. at 139. Nor did Congress contemplate a set of guidelines less detailed than ADAAG; the statute requires that the ADA guidelines supplement the existing MGRAD. When it established the statutory scheme, Congress was aware of the content and purpose of the 1982 MGRAD; as ADAAG does with respect to ADA, MGRAD establishes a minimum level of access that the Architectural Barriers Act standards (i.e., UFAS) must meet or exceed, and includes a high level of detail.

Many of the same commenters urged the Department to incorporate as its accessibility standards the ANSI standard's technical provisions and to adopt the proposed scoping provisions under development by the Council of American Building Officials' Board for the Coordination of Model Codes (BCMC). They contended that the ANSI standard is familiar to and accepted by professionals, and that both documents are developed through consensus. They suggested that ADAAG will not stay current, because it does not follow an established cyclical review process, and that it is not likely to be adopted by nonfederal jurisdictions in State and local codes. They urged the Department and the Board to coordinate the ADAAG provisions and any substantive changes to them with the ANSI A117 committee in order to maintain a consistent and uniform set of accessibility standards that can be efficiently and effectively implemented at the State and local level through the existing building regulatory processes.

The Department shares the commenters' goal of coordination between the private sector and Federal standards, to the extent that coordination can lead to substantive requirements consistent with the ADA. A single accessibility standard, or consistent accessibility standards, that can be used for ADA purposes and that can be incorporated or referenced by State and local governments, would help to ensure that the ADA requirements are routinely implemented at the design stage. The Department plans to work toward this goal.

The Department, however, must comply with the requirements of the ADA, the Federal Advisory Committee Act (5 U.S.C app. 1 *et seq.*) and the Administrative Procedure Act (5 U.S.C 551 *et seq.*). Neither the Department nor the Board can adopt private requirements wholesale. Furthermore, neither the 1991 ANSI A117 Standard revision nor the BCMC process is complete. Although the ANSI and BCMC provisions are not final, the Board has carefully considered both the draft BCMC scoping provisions and draft ANSI technical standards and included their language in ADAAG wherever consistent with the ADA.

Some commenters requested that, if the Department did not adopt ANSI by reference, the Department declare compliance with ANSI/BCMC to constitute equivalency with the ADA standards. The Department has not adopted this recommendation but has instead worked as a member of the ATBCB to ensure that its accessibility standards are practical and usable. In addition, as explained under subpart F, Certification of State Laws or Local Building Codes, the proper forum for further evaluation of this suggested approach would be in conjunction with the certification process.

Some commenters urged the Department to allow an additional comment period after the Board published its guidelines in final form, for purposes of affording the public a further opportunity to evaluate the appropriateness of including them as the Departments accessibility standards. Such an additional comment period is unnecessary and would unduly delay the issuance of final regulations. The Department put the public on notice, through the proposed rule, of its intention to adopt the proposed ADAAG, with any changes made by the Board, as the accessibility standards. As a member of the Board and of its ADA Task Force, the Department participated actively in the public hearings held on the proposed guidelines and in preparation of both the proposed and final versions of ADAAG. Many individuals and groups commented directly to the Department's docket, or at its public hearings, about ADAAG. The comments received on ADAAG, whether by the Board or by this Department, were thoroughly analyzed and considered by the Department in the context of whether the proposed ADAAG was consistent with the ADA and suitable for adoption as both guidelines and standards. The Department is convinced that ADAAG as adopted in its final form is appropriate for these purposes. The final guidelines, adopted here as standards, will ensure the high level of access contemplated by Congress, consistent with the ADA's balance between the interests of people with disabilities and the business community.

A few commenters, citing the Senate report (at 70) and the Education and Labor report (at 119), asked the Department to include in the regulations a provision stating that departures from particular technical and scoping requirements of the accessibility standards will be permitted so long as the alternative methods used will provide substantially equivalent or greater access to and utilization of the facility. Such a provision is found in ADAAG 2.2 and by virtue of that fact is included in these regulations.

Comments on specific provisions of proposed ADAAG

During the course of accepting comments on its proposed rule, the Department received numerous comments on ADAAG. Those areas that elicited the heaviest response included assistive listening systems, automated teller machines, work areas, parking, areas of refuge, telephones (scoping for TDD's and volume controls) and visual alarms. Strenuous objections were raised by some business commenters to the proposed provisions of the guidelines concerning check-out aisles, counters, and scoping for hotels and nursing facilities. All these comments were considered in the same manner as other comments on the Department's proposed rule and, in the Department's view, have been addressed adequately in the final ADAAG.

Largely in response to comments, the Board made numerous changes from its proposal, including the following:

• Generally, at least 50% of public entrances to new buildings must be accessible, rather than all entrances, as would often have resulted from the proposed approach.

• Not all check-out aisles are required to be accessible.

• The final guidelines provide greater flexibility in providing access to sales counters, and no longer require a portion of every counter to be accessible.

• Scoping for TDD's or text telephones was increased. One TDD or text telephone, for speech and hearing impaired persons, must be provided at locations with 4, rather than 6, pay phones, and in hospitals and shopping malls. Use of portable (less expensive) TDD's is allowed.

• Dispersal of wheelchair seating areas in theaters will be required only where there are more than 300 seats, rather than in all cases. Seats with removable armrests (i.e., seats into which persons with mobility impairments can transfer) will also be required.

• Areas of refuge (areas with direct access to a stairway, and where people who cannot use stairs may await assistance during an emergency evacuation) will be required, as proposed, but the final provisions are based on the Uniform Building Code. Such areas are not required in alterations.

• Rather than requiring 5% of new hotel rooms to be accessible to people with mobility impairments, between 2 and 4% accessibility (depending on total number of rooms) is required. In addition, 1% of the rooms must have roll-in showers.

• The proposed rule reserved the provisions on alterations to homeless shelters. The final guidelines apply alterations requirements to homeless shelters, but the requirements are less stringent than those applied to other types of facilities.

• Parking spaces that can be used by people in vans (with lifts) will be required.

• As mandated by the ADA, the Board has established a procedure to be followed with respect to alterations to historic facilities.

SUMMARY OF ADAAG

This section of the preamble summarizes the structure of ADAAG, and highlights the more important portions.

• *Sections 1 Through 3*

Sections 1 through 3 contain general requirements, including definitions.

• *Section 4.1.1, Application*

Section 4 contains scoping requirements. Section 4.1.1, Application, provides that all areas of newly designed or newly constructed buildings and facilities and altered portions of existing buildings and facilities required to be accessible by §4.1.6 must comply with the guidelines unless otherwise provided in §4.1.1 or a special application section. It addresses areas used only by employees as work areas, temporary structures, and general exceptions.

Section 4.1.1(3) preserves the basic principle of the proposed rule: Areas that may be used by employees with disabilities shall be designed and constructed so that an individual with a disability can approach, enter, and exit the area. The language has been clarified to provide that it applies to any area used only as a work area (not just to areas ''that may be used by employees with disabilities''), and that the guidelines do not require that any area used as an individual work station be designed with maneuvering space or equipped to be accessible. The appendix to ADAAG explains that work areas must meet the guidelines' requirements for doors and accessible routes, and recommends, but does not require, that 5% of individual work stations be designed to permit a person using a wheelchair to maneuver within the space.

Further discussion of work areas is found in the preamble concerning proposed §36.401(b).

Section 4.1.1(5)(a) includes an exception for structural impracticability that corresponds to the one found in §36.401(c) and discussed in that portion of the preamble.

• *Section 4.1.2, Accessible Sites and Exterior Facilities: New Construction*

This section addresses exterior features, elements, or spaces such as parking, portable toilets, and exterior signage, in new construction. Interior elements and spaces are covered by §4.1.3.

The final rule retains the UFAS scoping for parking but also requires that at least one of every eight accessible parking spaces be designed with adequate adjacent space to deploy a lift used with a van. These spaces must have a sign indicating that they are van-accessible, but they are not to be reserved exclusively for van users.

• *Section 4.1.3, Accessible Buildings: New Construction*

This section establishes scoping requirements for new construction of buildings and facilities.

Sections 4.1.3 (1) through (4) cover accessible routes, protruding objects, ground and floor surfaces, and stairs.

Section 4.1.3(5) generally requires elevators to serve each level in a newly constructed building, with four exceptions included in the subsection. Exception 1 is the ''elevator exception'' established in §36.401(d), which must be read with this section. Exception 4 allows the use of platform lifts under certain conditions.

Section 4.1.3(6), Windows, is reserved. Section 4.1.3(7) applies to doors.

Under §4.1.3(8), at least 50% of all public entrances must be accessible. In addition, if a building is designed to provide access to enclosed parking, pedestrian tunnels, or elevated walkways, at least one entrance that serves each such function must be accessible. Each tenancy in a building must be served by an accessible entrance. Where local regulations (e.g., fire codes) require that a minimum number of exits be provided, an equivalent number of accessible entrances must be provided. (The latter provision does not require a greater number of entrances than otherwise planned.)

ADAAG Section 4.1.3(9), with accompanying technical requirements in Section 4.3, requires an area of rescue assistance (*i.e.*, an area with direct access to an exit stairway and where people who are unable to use stairs may await assistance during an emergency evacuation) to be established on each floor of a multi-story building. This was one of the most controversial provisions in the guidelines. The final ADAAG is based on current Uniform Building Code requirements and retains the requirement that areas of refuge (renamed ''areas of rescue assistance'') be provided, but specifies that this requirement does not apply to buildings that have a supervised automatic sprinkler system. Areas of refuge are not required in alterations.

The next seven subsections deal with drinking fountains (§4.1.3(10)); toilet facilities (§4.1.3(11)); storage, shelving, and display units (§4.1.3(12)), controls and operating mechanisms (§4.1.3(13)), emergency warning systems (§4.1.3(14)), detectable warnings (§4.1.3(15)), and building signage (§4.1.3(16)). Paragraph 11 requires that toilet facilities comply with §4.22, which requires one accessible toilet stall (60<″×60<″) in each newly constructed restroom. In response to public comments, the final rule requires that a second accessible stall (36<″×60<″) be provided in restrooms that have six or more stalls.

ADAAG Section 4.1.3(17) establishes requirements for accessibility of pay phones to persons with mobility impairments, hearing impairments (requiring some phones with volume controls), and those who cannot use voice telephones. It requires one interior ''text telephone'' to be provided at any facility that has a total of four or more public pay phones. (The term ''text telephone'' has been adopted to reflect current terminology and changes in technology.) In addition, text telephones will be required in specific locations, such as covered shopping malls, hospitals (in emergency rooms, waiting rooms, and recovery areas), and convention centers.

Paragraph 18 of Section 4.1.3 generally requires that at least five percent of fixed or built-in seating or tables be accessible.

Paragraph 19, covering assembly areas, specifies the number of wheelchair seating spaces and types and numbers of assistive listening systems required. It requires dispersal of wheelchair seating locations in facilities where there are more than 300 seats. The guidelines also require that at least one percent of all fixed seats be aisle seats without armrests (or with moveable armrests) on the aisle side to increase accessibility for persons with mobility impairments who prefer to transfer from their wheelchairs to fixed seating. In addition, the final ADAAG requires that fixed seating for a companion be located adjacent to each wheelchair location.

Paragraph 20 requires that where automated teller machines are provided, at least one must comply with section 4.34, which, among other things, requires accessible controls, and instructions and other information that are accessible to persons with sight impairments.

Under paragraph 21, where dressing rooms are provided, five percent or at least one must comply with section 4.35.

• *Section 4.1.5, Additions*

Each addition to an existing building or facility is regarded as an alteration subject to §§36.402 through 36.406 of subpart D, including the date established in §36.402(a). But additions also have attributes of new construction, and to the extent that a space or element in the addition is newly constructed,

each new space or element must comply with the applicable scoping provisions of sections 4.1.1 to 4.1.3 for new construction, the applicable technical specifications of sections 4.2 through 4.34, and any applicable special provisions in sections 5 through 10. For instance, if a restroom is provided in the addition, it must comply with the requirements for new construction. Construction of an addition does not, however, create an obligation to retrofit the entire existing building or facility to meet requirements for new construction. Rather, the addition is to be regarded as an alteration and to the extent that it affects or could affect the usability of or access to an area containing a primary function, the requirements in section 4.1.6(2) are triggered with respect to providing an accessible path of travel to the altered area and making the restrooms, telephones, and drinking fountains serving the altered area accessible. For example, if a museum adds a new wing that does not have a separate entrance as part of the addition, an accessible path of travel would have to be provided through the existing building or facility unless it is disproportionate to the overall cost and scope of the addition as established in §36.403(f).

• *Section 4.1.6, Alterations*

An alteration is a change to a building or facility that affects or could affect the usability of or access to the building or facility or any part thereof. There are three general principles for alterations. First, if any existing element or space is altered, the altered element or space must meet new construction requirements (section 4.1.6(1)(b)). Second, if alterations to the elements in a space when considered together amount to an alteration of the space, the entire space must meet new construction requirements (section 4.1.6(1)(c)). Third, if the alteration affects or could affect the usability of or access to an area containing a primary function, the path of travel to the altered area and the restrooms, drinking fountains, and telephones serving the altered area must be made accessible unless it is disproportionate to the overall alterations in terms of cost and scope as determined under criteria established by the Attorney General (§4.1.6(2)).

Section 4.1.6 should be read with §§36.402 through 36.405. Requirements concerning alterations to an area serving a primary function are addressed with greater detail in the latter sections than in section 4.1.6(2). Section 4.1.6(1)(j) deals with technical infeasibility. Section 4.1.6(3) contains special technical provisions for alterations to existing buildings and facilities.

• *Section 4.1.7, Historic Preservation*

This section contains scoping provisions and alternative requirements for alterations to qualified historic buildings and facilities. It clarifies the procedures under the National Historic Preservation Act and their application to alterations covered by the ADA. An individual seeking to alter a facility that is subject to the ADA guidelines and to State or local historic preservation statutes shall consult with the State Historic Preservation Officer to determine if the planned alteration would threaten or destroy the historic significance of the facility.

• *Sections 4.2 Through 4.35*

Sections 4.2 through 4.35 contain the technical specifications for elements and spaces required to be accessible by the scoping provisions (sections 4.1 through 4.1.7) and special application sections (sections 5 through 10). The technical specifications are the same as the 1980 version of ANSI A117.1 standard, except as noted in the text by italics.

• *Sections 5 Through 9*

These are special application sections and contain additional requirements for restaurants and cafeterias, medical care facilities, business and mercantile facilities, libraries, and transient lodging. For example, at least 5 percent, but not less than one, of the fixed tables in a restaurant must be accessible.

In section 7, Business and Mercantile, paragraph 7.2 (Sales and Service Counters, Teller Windows, Information Counters) has been revised to provide greater flexibility in new construction than did the proposed rule. At least one of each type of sales or service counter where a cash register is located shall be made accessible. Accessible counters shall be dispersed throughout the facility. At counters such as bank teller windows or ticketing counters, alternative methods of compliance are permitted. A public accommodation may lower a portion of the counter, provide an auxiliary counter, or provide equivalent facilitation through such means as installing a folding shelf on the front of the counter at an accessible height to provide a work surface for a person using a wheelchair.

Section 7.3., Check-out Aisles, provides that, in new construction, a certain number of each design of check-out aisle, as listed in a chart based on the total number of check-out aisles of each design, shall be accessible. The percentage of check-outs required to be accessible generally ranges from 20% to 40%. In a newly constructed or altered facility with less than 5,000 square feet of selling space, at least one of each type of check-out aisle must be accessible. In altered facilities with 5,000 or more square feet of selling space, at least one of each design of check-out aisle must be made accessible when altered, until the number of accessible aisles

of each design equals the number that would be required for new construction.

• *Section 9, Accessible Transient Lodging*

Section 9 addresses two types of transient lodging: hotels, motels, inns, boarding houses, dormitories, resorts, and other similar places (sections 9.1 through 9.4); and homeless shelters, halfway houses, transient group homes, and other social service establishments (section 9.5). The interplay of the ADA and Fair Housing Act with respect to such facilities is addressed in the preamble discussion of the definition of ''place of public accommodation'' in §36.104.

The final rule establishes scoping requirements for accessibility of newly constructed hotels. Four percent of the first hundred rooms, and roughly two percent of rooms in excess of 100, must meet certain requirements for accessibility to persons with mobility or hearing impairments, and an additional identical percentage must be accessible to persons with hearing impairments. An additional 1% of the available rooms must be equipped with roll-in showers, raising the actual scoping for rooms accessible to persons with mobility impairments to 5% of the first hundred rooms and 3% thereafter. The final ADAAG also provides that when a hotel is being altered, one fully accessible room and one room equipped with visual alarms, notification devices, and amplified telephones shall be provided for each 25 rooms being altered until the number of accessible rooms equals that required under the new construction standard. Accessible rooms must be dispersed in a manner that will provide persons with disabilities with a choice of single or multiple-bed accommodations.

In new construction, homeless shelters and other social service entities must comply with ADAAG; at least one type of amenity in each common area must be accessible. In a facility that is not required to have an elevator, it is not necessary to provide accessible amenities on the inaccessible floors if at least one of each type of amenity is provided in accessible common areas. The percentage of accessible sleeping accommodations required is the same as that required for other places of transient lodging. Requirements for facilities altered for use as a homeless shelter parallel the current MGRAD accessibility requirements for leased buildings. A shelter located in an altered facility must have at least one accessible entrance, accessible sleeping accommodations in a number equivalent to that established for new construction, at least one accessible toilet and bath, at least one accessible common area, and an accessible route connecting all accessible areas. All accessible areas in a homeless shelter in an altered facility may be located on one level.

Section 10, Transportation Facilities

Section 10 of ADAAG is reserved. On March 20, 1991, the ATBCB published a supplemental notice of proposed rulemaking (56 FR 11874) to establish special access requirements for transportation facilities. The Department anticipates that when the ATBCB issues final guidelines for transportation facilities, this part will be amended to include those provisions.

Subpart E—Enforcement

Because the Department of Justice does not have authority to establish procedures for judicial review and enforcement, subpart E generally restates the statutory procedures for enforcement.

Section 36.501 describes the procedures for private suits by individuals and the judicial remedies available. In addition to the language in section 308(a)(1) of the Act, §36.501(a) of this part includes the language from section 204(a) of the Civil Rights Act of 1964 (42 U.S.C. 2000a–3(a)) which is incorporated by reference in the ADA. A commenter noted that the proposed rule did not include the provision in section 204(a) allowing the court to appoint an attorney for the complainant and authorize the commencement of the civil action without the payment of fees, costs, or security. That provision has been included in the final rule.

Section 308(a)(1) of the ADA permits a private suit by an individual who has reasonable grounds for believing that he or she is ''about to be'' subjected to discrimination in violation of section 303 of the Act (subpart D of this part), which requires that new construction and alterations be readily accessible to and usable by individuals with disabilities. Authorizing suits to prevent construction of facilities with architectural barriers will avoid the necessity of costly retrofitting that might be required if suits were not permitted until after the facilities were completed. To avoid unnecessary suits, this section requires that the individual bringing the suit have 'reasonable grounds' for believing that a violation is about to occur, but does not require the individual to engage in a futile gesture if he or she has notice that a person or organization covered by title III of the Act does not intend to comply with its provisions.

Section 36.501(b) restates the provisions of section 308(a)(2) of the Act, which states that injunctive relief for the failure to remove architectural barriers in existing facilities or the failure to make new construction and alterations accessible ''shall include'' an order to alter these facilities to make them readily accessible to and usable by persons with disabilities to the extent required by title III. The Report of the Energy and Commerce Committee notes that ''an order to make a facility readily accessible to and usable by

individuals with disabilities is mandatory'' under this standard. H.R. Rep. No. 485, 101st Cong., 2d Sess, pt 4, at 64 (1990). Also, injunctive relief shall include, where appropriate, requiring the provision of an auxiliary aid or service, modification of a policy, or provision of alternative methods, to the extent required by title III of the Act and this part.

Section 36.502 is based on section 308(b)(1)(A)(i) of the Act, which provides that the Attorney General shall investigate alleged violations of title III and undertake periodic reviews of compliance of covered entities. Although the Act does not establish a comprehensive administrative enforcement mechanism for investigation and resolution of all complaints received, the legislative history notes that investigation of alleged violations and periodic compliance reviews are essential to effective enforcement of title III, and that the Attorney General is expected to engage in active enforcement and to allocate sufficient resources to carry out this responsibility. Judiciary Report at 67.

Many commenters argued for inclusion of more specific provisions for administrative resolution of disputes arising under the Act and this part in order to promote voluntary compliance and avoid the need for litigation. Administrative resolution is far more efficient and economical than litigation, particularly in the early stages of implementation of complex legislation when the specific requirements of the statute are not widely understood. The Department has added a new paragraph (c) to this section authorizing the Attorney General to initiate a compliance review where he or she has reason to believe there may be a violation of this rule.

Section 36.503 describes the procedures for suits by the Attorney General set out in section 308(b)(1)(B) of the Act. If the Department has reasonable cause to believe that any person or group of persons is engaged in a pattern or practice of resistance to the full enjoyment of any of the rights granted by title III or that any person or group of persons has been denied any of the rights granted by title III and such denial raises an issue of general public importance, the Attorney General may commence a civil action in any appropriate United States district court. The proposed rule provided for suit by the Attorney General ''or his or her designee.'' The reference to a ''designee'' has been omitted in the final rule because it is unnecessary. The Attorney General has delegated enforcement authority under the ADA to the Assistant Attorney General for Civil Rights. 55 FR 40653 (October 4, 1990) (to be codified at 28 CFR 0.50(l).)

Section 36.504 describes the relief that may be granted in a suit by the Attorney General under section 308(b)(2) of the Act. In such an action, the court may grant any equitable relief it considers to be appropriate, including granting temporary, preliminary, or permanent relief, providing an auxiliary aid or service, modification of policy or alternative method, or making facilities readily accessible to and usable by individuals with disabilities, to the extent required by title III. In addition, a court may award such other relief as the court considers to be appropriate, including monetary damages to persons aggrieved, when requested by the Attorney General.

Furthermore, the court may vindicate the public interest by assessing a civil penalty against the covered entity in an amount not exceeding $50,000 for a first violation and not exceeding $100,000 for any subsequent violation. Section 36.504(b) of the rule adopts the standard of section 308(b)(3) of the Act. This section makes it clear that, in counting the number of previous determinations of violations for determining whether a ''first'' or ''subsequent'' violation has occurred, determinations in the same action that the entity has engaged in more than one discriminatory act are to be counted as a single violation. A ''second violation'' would not accrue to that entity until the Attorney General brought another suit against the entity and the entity was again held in violation. Again, all of the violations found in the second suit would be cumulatively considered as a ''subsequent violation.''

Section 36.504(c) clarifies that the terms ''monetary damages'' and ''other relief'' do not include punitive damages. They do include, however, all forms of compensatory damages, including out-of-pocket expenses and damages for pain and suffering.

Section 36.504(a)(3) is based on section 308(b)(2)(C) of the Act, which provides that, ''to vindicate the public interest,'' a court may assess a civil penalty against the entity that has been found to be in violation of the Act in suits brought by the Attorney General. In addition, §36.504(d), which is taken from section 308(b)(5) of the Act, further provides that, in considering what amount of civil penalty, if any, is appropriate, the court shall give consideration to ''any good faith effort or attempt to comply with this part.'' In evaluating such good faith, the court shall consider ''among other factors it deems relevant, whether the entity could have reasonably anticipated the need for an appropriate type of auxiliary aid needed to accommodate the unique needs of a particular individual with a disability.''

The ''good faith'' standard referred to in this section is not intended to imply a willful or intentional standard—that is, an entity cannot demonstrate good faith simply by showing that it did not willfully, intentionally, or recklessly disregard the law. At the same time, the absence of such a course of conduct would be a factor a court should weigh in determining the existence of good faith.

Section 36.505 states that courts are authorized to award attorneys fees, including litigation expenses and costs, as provided in section 505 of the Act. Litigation expenses include items such as expert witness fees, travel expenses, etc. The Judiciary Committee Report specifies that such items are included under the rubric of ''attorneys fees'' and not ''costs'' so that such expenses will be assessed against a plaintiff only under the standard set forth in *Christiansburg Garment Co.* v. *Equal Employment Opportunity Commission,* 434 U.S. 412 (1978). (Judiciary report at 73.)

Section 36.506 restates section 513 of the Act, which encourages use of alternative means of dispute resolution. Section 36.507 explains that, as provided in section 506(e) of the Act, a public accommodation or other private entity is not excused from compliance with the requirements of this part because of any failure to receive technical assistance.

Section 36.305 Effective Date

In general, title III is effective 18 months after enactment of the Americans with Disabilities Act, i.e., January 26, 1992. However, there are several exceptions to this general rule contained throughout title III. Section 36.508 sets forth all of these exceptions in one place.

Paragraph (b) contains the rule on civil actions. It states that, except with respect to new construction and alterations, no civil action shall be brought for a violation of this part that occurs before July 26, 1992, against businesses with 25 or fewer employees and gross receipts of $1,000,000 or less; and before January 26, 1993, against businesses with 10 or fewer employees and gross receipts of $500,000 or less. In determining what constitutes gross receipts, it is appropriate to exclude amounts collected for sales taxes.

Paragraph (c) concerns transportation services provided by public accommodations not primarily engaged in the business of transporting people. The 18-month effective date applies to all of the transportation provisions except those requiring newly purchased or leased vehicles to be accessible. Vehicles subject to that requirement must be accessible to and usable by individuals with disabilities if the solicitation for the vehicle is made on or after August 26, 1990.

Subpart F—Certification of State Labs or Local Building Codes

Subpart F establishes procedures to implement section 308(b)(1)(A)(ii) of the Act, which provides that, on the application of a State or local government, the Attorney General may certify that a State law or local building code or similar ordinance meets or exceeds the minimum accessibility requirements of the Act. In enforcement proceedings, this certification will constitute rebuttable evidence that the law or code meets or exceeds the ADA's requirements.

Three significant changes, further explained below, were made from the proposed subpart, in response to comments. First, the State or local jurisdiction is required to hold a public hearing on its proposed request for certification and to submit to the Department, as part of the information and materials in support of a request for certification, a transcript of the hearing. Second, the time allowed for interested persons and organizations to comment on the request filed with the Department (§36.605(a)(1)) has been changed from 30 to 60 days. Finally, a new §36.608, Guidance concerning model codes, has been added.

Section 36.601 establishes the definitions to be used for purposes of this subpart. Two of the definitions have been modified, and a definition of ''model code'' has been added. First, in response to a comment, a reference to a code ''or part thereof'' has been added to the definition of ''code.'' The purpose of this addition is to clarify that an entire code need not be submitted if only part of it is relevant to accessibility, or if the jurisdiction seeks certification of only some of the portions that concern accessibility. The Department does not intend to encourage ''piecemeal'' requests for certification by a single jurisdiction. In fact, the Department expects that in some cases, rather than certifying portions of a particular code and refusing to certify others, it may notify a submitting jurisdiction of deficiencies and encourage a reapplication that cures those deficiencies, so that the entire code can be certified eventually. Second, the definition of ''submitting official'' has been modified. The proposed rule defined the submitting official to be the State or local official who has principal responsibility for administration of a code. Commenters pointed out that in some cases more than one code within the same jurisdiction is relevant for purposes of certification. It was also suggested that the Department allow a State to submit a single application on behalf of the State, as well as on behalf of any local jurisdictions required to follow the State accessibility requirements. Consistent with these comments, the Department has added to the definition language clarifying that the official can be one authorized to submit a code on behalf of a jurisdiction.

A definition of ''model code'' has been added in light of new §36.608.

Most commenters generally approved of the proposed certification process. Some approved of what they saw as the Department's attempt to bring State and local codes into alignment with the ADA. A State agency said that this section will be the backbone of the intergovernmental cooperation essential

if the accessibility provisions of the ADA are to be effective.

Some comments disapproved of the proposed process as timeconsuming and laborious for the Department, although some of these comments pointed out that, if the Attorney General certified model codes on which State and local codes are based, many perceived problems would be alleviated. (This point is further addressed by new §36.608.)

Many of the comments received from business organizations, as well as those from some individuals and disability rights groups, addressed the relationship of the ADA requirements and their enforcement, to existing State and local codes and code enforcement systems. These commenters urged the Department to use existing code-making bodies for interpretations of the ADA, and to actively participate in the integration of the ADA into the text of the national model codes that are adopted by State and local enforcement agencies. These issues are discussed in preamble section 36.406 under General comments.

Many commenters urged the Department to evaluate or certify the entire code enforcement system (including any process for hearing appeals from builders of denials by the building code official of requests for variances, waivers, or modifications). Some urged that certification not be allowed in jurisdictions where waivers can be granted, unless there is a clearly identified decision-making process, with written rulings and notice to affected parties of any waiver or modification request. One commenter urged establishment of a dispute resolution mechanism, providing for interpretation (usually through a building official) and an administrative appeals mechanism (generally called Boards of Appeal, Boards of Construction Appeals, or Boards of Review), before certification could be granted.

The Department thoroughly considered these proposals but has declined to provide for certification of processes of enforcement or administration of State and local codes. The statute clearly authorizes the Department to certify the codes themselves for equivalency with the statute; it would be ill-advised for the Department at this point to inquire beyond the face of the code and written interpretations of it. It would be inappropriate to require those jurisdictions that grant waivers or modifications to establish certain procedures before they can apply for certification, or to insist that no deviations can be permitted. In fact, the Department expects that many jurisdictions will allow slight variations from a particular code, consistent with ADAAG itself. ADAAG includes in §2.2 a statement allowing departures from particular requirements where substantially equivalent or greater access and usability is provided. Several sections specifically allow for alternative methods providing equivalent facilitation and, in some cases, provide examples. (See, e.g., section 4.31.9, Text Telephones; section 7.2(2) (iii), Sales and Service Counters.) Section 4.1.6 includes less stringent requirements that are permitted in alterations, in certain circumstances.

However, in an attempt to ensure that it does not certify a code that in practice has been or will be applied in a manner that defeats its equivalency with the ADA, the Department will require that the submitting official include, with the application for certification, any relevant manuals, guides, or any other interpretive information issued that pertain to the code. (§36.603(c)(1).) The requirement that this information be provided is in addition to the NPRM's requirement that the official provide any pertinent formal opinions of the State Attorney General or the chief legal officer of the jurisdiction.

The first step in the certification process is a request for certification, filed by a ''submitting official'' (§36.603). The Department will not accept requests for certification until after January 26, 1992, the effective date of this part. The Department received numerous comments from individuals and organizations representing a variety of interests, urging that the hearing required to be held by the Assistant Attorney General in Washington, DC, after a preliminary determination of equivalency (§36.605(a)(2)), be held within the State or locality requesting certification, in order to facilitate greater participation by all interested parties. While the Department has not modified the requirement that it hold a hearing in Washington, it has added a new subparagraph 36.603(b)(3) requiring a hearing within the State or locality before a request for certification is filed. The hearing must be held after adequate notice to the public and must be on the record; a transcript must be provided with the request for certification. This procedure will insure input from the public at the State or local level and will also insure a Washington, DC, hearing as mentioned in the legislative history.

The request for certification, along with supporting documents (§36.603(c)), must be filed in duplicate with the office of the Assistant Attorney General for Civil Rights. The Assistant Attorney General may request further information. The request and supporting materials will be available for public examination at the office of the Assistant Attorney General and at the office of the State or local agency charged with administration and enforcement of the code. The submitting official must publish public notice of the request for certification.

Next, under §36.604, the Assistant Attorney General's office will consult with the ATBCB and make a preliminary determination to either (1) find that the code is equivalent

(make a ''preliminary determination of equivalency'') or (2) deny certification. The next step depends on which of these preliminary determinations is made.

If the preliminary determination is to find equivalency, the Assistant Attorney General, under §36.605, will inform the submitting official in writing of the preliminary determination and publish a notice in the FEDERAL REGISTER informing the public of the preliminary determination and inviting comment for 60 days. (This time period has been increased from 30 days in light of public comment pointing out the need for more time within which to evaluate the code.) After considering the information received in response to the comments, the Department will hold a hearing in Washington. This hearing will not be subject to the formal requirements of the Administrative Procedure Act. In fact, this requirement could be satisfied by a meeting with interested parties. After the hearing, the Assistant Attorney General's office will consult again with the ATBCB and make a final determination of equivalency or a final determination to deny the request for certification, with a notice of the determination published in the FEDERAL REGISTER.

1If the preliminary determination is to deny certification, there will be no hearing (§36.606). The Department will notify the submitting official of the preliminary determination, and may specify how the code could be modified in order to receive a preliminary determination of equivalency. The Department will allow at least 15 days for the submitting official to submit relevant material in opposition to the preliminary denial. If none is received, no further action will be taken. If more information is received, the Department will consider it and make either a final decision to deny certification or a preliminary determination of equivalency. If at that stage the Assistant Attorney General makes a preliminary determination of equivalency, the hearing procedures set out in §36.605 will be followed.

Section 36.607 addresses the effect of certification. First, certification will only be effective concerning those features or elements that are both (1) covered by the certified code and (2) addressed by the regulations against which they are being certified. For example, if children's facilities are not addressed by the Department's standards, and the building in question is a private elementary school, certification will not be effective for those features of the building to be used by children. And if the Department's regulations addressed equipment but the local code did not, a building's equipment would not be covered by the certification.

In addition, certification will be effective only for the particular edition of the code that is certified. Amendments will not automatically be considered certified, and a submitting official will need to reapply for certification of the changed or additional provisions.

Certification will not be effective in those situations where a State or local building code official allows a facility to be constructed or altered in a manner that does not follow the technical or scoping provisions of the certified code. Thus, if an official either waives an accessible element or feature or allows a change that does not provide equivalent facilitation, the fact that the Department has certified the code itself will not stand as evidence that the facility has been constructed or altered in accordance with the minimum accessibility requirements of the ADA. The Department's certification of a code is effective only with respect to the standards in the code; it is not to be interpreted to apply to a State or local government's application of the code. The fact that the Department has certified a code with provisions concerning waivers, variances, or equivalent facilitation shall not be interpreted as an endorsement of actions taken pursuant to those provisions.

The final rule includes a new §36.608 concerning model codes. It was drafted in response to concerns raised by numerous commenters, many of which have been discussed under General comments (§36.406). It is intended to assist in alleviating the difficulties posed by attempting to certify possibly tens of thousands of codes. It is included in recognition of the fact that many codes are based on, or incorporate, model or consensus standards developed by nationally recognized organizations (e.g., the American National Standards Institute (ANSI); Building Officials and Code Administrators (BOCA) International; Council of American Building Officials (CABO) and its Board for the Coordination of Model Codes (BCMC); Southern Building Code Congress International (SBCCI)). While the Department will not certify or ''precertify'' model codes, as urged by some commenters, it does wish to encourage the continued viability of the consensus and model code process consistent with the purposes of the ADA.

The new section therefore allows an authorized representative of a private entity responsible for developing a model code to apply to the Assistant Attorney General for review of the code. The review process will be informal and will not be subject to the procedures of §§36.602 through 36.607. The result of the review will take the form of guidance from the Assistant Attorney General as to whether and in what respects the model code is consistent with the ADA's requirements. The guidance will not be binding on any entity or on the Department; it will assist in evaluations of individual State or local codes and may serve as a basis for establishing priorities for consideration of individual codes. The Department anticipates

that this approach will foster further cooperation among various government levels, the private entities developing standards, and individuals with disabilities.

PART 37—PROCEDURES FOR COORDINATING THE INVESTIGATION OF COMPLAINTS OR CHARGES OF EMPLOYMENT DISCRIMINATION BASED ON DISABILITY SUBJECT TO THE AMERICANS WITH DISABILITIES ACT AND SECTION 504 OF THE REHABILITATION ACT OF 1973

Sec.

37.1 Purpose and application.
37.2 Definitions.
37.3 Exchange of information.
37.4 Confidentiality.
37.5 Date of receipt.
37.6 Processing of complaints of employment discrimination filed with an agency other than the EEOC.
37.7 Processing of charges of employment discrimination filed with the EEOC.
37.8 Processing of complaints or charges of employment discrimination filed with both the EEOC and a section 504 agency.
37.9 Processing of complaints or charges of employment discrimination filed with a designated agency and either a section 504 agency, the EEOC, or both.
37.10 Section 504 agency review of deferred complaints.
37.11 EEOC review of deferred charges.
37.12 Standards.
37.13 Agency specific memoranda of understanding.

AUTHORITY: 5 U.S.C. 301; 28 U.S.C. 509, 510; 29 U.S.C. 794 (d); 42 U.S.C. 12117(b); 28 CFR 0.50(1).

SOURCE: Order No. 1899–94, 59 FR 39904, 39908, Aug. 4, 1994, unless otherwise noted.

§ 37.1 Purpose and application.

(a) This part establishes the procedures to be followed by the Federal agencies responsible for processing and resolving complaints or charges of employment discrimination filed against recipients of Federal financial assistance when jurisdiction exists under both section 504 and title I.

(b) This part also repeats the provisions established by 28 CFR 35.171 for determining which Federal agency shall process and resolve complaints or charges of employment discrimination:

(1) That fall within the overlapping jurisdiction of titles I and II (but are not covered by section 504); and

(2) That are covered by title II, but not title I (whether or not they are also covered by section 504).

(c) This part also describes the procedures to be followed when a complaint or charge arising solely under section 504 or title I is filed with a section 504 agency or the EEOC.

(d) This part does not apply to complaints or charges against Federal contractors under section 503 of the Rehabilitation Act.

(e) This part does not create rights in any person or confer agency jurisdiction not created or conferred by the ADA or section 504 over any complaint or charge.

§ 37.2 Definitions.

As used in this part, the term:

Americans with Disabilities Act of 1990 or *ADA* means the Americans with Disabilities Act of 1990 (Pub. L. 101–336, 104 Stat. 327, 42 U.S.C. 12101–12213 and 47 U.S.C. 225 and 611).

Assistant Attorney General refers to the Assistant Attorney General, Civil Rights Division, United States Department of Justice, or his or her designee.

Chairman of the Equal Employment Opportunity Commission refers to the Chairman of the United States Equal Employment Opportunity Commission, or his or her designee.

Civil Rights Division means the Civil Rights Division of the United States Department of Justice.

Designated agency means any one of the eight agencies designated under § 35.190 of 28 CFR part 35 (the Department's title II regulation) to implement and enforce title II of the ADA with respect to the functional areas within their jurisdiction.

Dual-filed complaint or charge means a complaint or charge of employment discrimination that:

(1) Arises under both section 504 and title I;

(2) Has been filed with both a section 504 agency that has jurisdiction under section 504 and with the EEOC, which has jurisdiction under title I; and

(3) Alleges the same facts and raises the same issues in both filings.

Due weight shall mean, with respect to the weight a section 504 agency or the EEOC shall give to the other agency's findings and conclusions, such full and careful consideration as is appropriate, taking into account such factors as:

(1) The extent to which the underlying investigation is complete and the evidence is supportive of the findings and conclusions;

(2) The nature and results of any subsequent proceedings;

(3) The extent to which the findings, conclusions and any actions taken:

(i) Under title I are consistent with the effective enforcement of section 504; or

(ii) Under section 504 are consistent with the effective enforcement of title I; and

(4) The section 504 agency's responsibilities under section 504 or the EEOC's responsibilities under title I.

Equal Employment Opportunity Commission or *EEOC* refers to the United States Equal Employment Opportunity Commission, and, when appropriate, to any of its headquarters, district, area, local, or field offices.

Federal financial assistance shall have the meaning, with respect to each section 504 agency, as defined in such agency's regulations implementing section 504 for Federally- assisted programs.

Program or activity shall have the meaning defined in the Rehabilitation Act of 1973 (Pub. L. 93–112, 87 Stat. 394, 29 U.S.C. 794), as amended.

Public entity means:

(1) Any State or local government;

(2) Any department, agency, special purpose district, or other instrumentality of a State or States or local government; and

(3) The National Railroad Passenger Corporation, and any commuter authority (as defined in section 103(8) of the Rail Passenger Service Act, 45 U.S.C. 502(8)).

Recipient means any State, political subdivision of any State, or instrumentality of any State or political subdivision, any public or private agency, institution, organization, or other entity, or any individual, in any State, to whom Federal financial assistance is extended, directly or through another recipient, for any program, including any successor, assignee, or transferee thereof, but such term does not include any ultimate beneficiary under such program.

Section 504 means section 504 of the Rehabilitation Act of 1973 (Pub. L. 93–112, 87 Stat. 394, 29 U.S.C. 794), as amended.

Section 504 agency means any Federal department or agency that extends Federal financial assistance to programs or activities of recipients.

Title I means title I of the ADA.

Title II means subtitle A of title II of the ADA.

§ 37.3 Exchange of information.

The EEOC, section 504 agencies, and designated agencies shall share any information relating to the employment policies and practices of a respondent that may assist each agency in carrying out its responsibilities, to the extent permissible by law. Such information shall include, but is not limited to, complaints, charges, investigative files, compliance review reports and files, affirmative action programs, and annual employment reports.

§ 37.4 Confidentiality.

(a) When a section 504 agency or a designated agency receives information obtained by the EEOC, such agency shall observe the confidentiality requirements of section 706(b) and section 709(e) of the Civil Rights Act of 1964, as amended (42 U.S.C. 2000e-5(b) and 2000e-8(e)), as incorporated by section 107(a) of the ADA, to the same extent as these provisions would bind the EEOC, except when the agency receives the same information from a source independent of the EEOC. Agency questions concerning the confidentiality requirements of title I shall be directed to the Associate Legal Counsel for Legal Services, Office of Legal Counsel, the EEOC.

(b) When the EEOC receives information from a section 504 or a designated agency, the EEOC shall observe any confidentiality requirements applicable to that information.

§ 37.5 Date of receipt.

A complaint or charge of employment discrimination is deemed to be

filed, for purposes of determining timeliness, on the date the complaint or charge is first received by a Federal agency with section 504 or ADA jurisdiction, regardless of whether it is subsequently transferred to another agency for processing.

§ 37.6 Processing of complaints of employment discrimination filed with an agency other than the EEOC.

(a) *Agency determination of jurisdiction.* Upon receipt of a complaint of employment discrimination, an agency other than the EEOC shall:

(1) Determine whether it has jurisdiction over the complaint under section 504 or under title II of the ADA; and

(2) Determine whether the EEOC may have jurisdiction over the complaint under title I of the ADA.

(b) *Referral to the Civil Rights Division.* If the agency determines that it does not have jurisdiction under section 504 or title II, and determines that the EEOC does not have jurisdiction under title I, the agency shall promptly refer the complaint to the Civil Rights Division. The Civil Rights Division shall determine if another Federal agency may have jurisdiction over the complaint under section 504 or title II, and, if so, shall promptly refer the complaint to a section 504 or a designated agency with jurisdiction over the complaint.

(c) *Referral to the EEOC*—(1) *Referral by an agency without jurisdiction.* If an agency determines that it does not have jurisdiction over a complaint of employment discrimination under either section 504 or title II and determines that the EEOC may have jurisdiction under title I, the agency shall promptly refer the complaint to the EEOC for investigation and processing under title I of the ADA.

(2) *Referral by a section 504 agency.* (i) A section 504 agency that otherwise has jurisdiction over a complaint of employment discrimination under section 504 shall promptly refer to the EEOC, for investigation and processing under title I of the ADA, any complaint of employment discrimination that solely alleges discrimination against an individual (and that does not allege discrimination in both employment and in other practices or services of the respondent or a pattern or practice of employment discrimination), unless:

(A) The section 504 agency determines that the EEOC does not have jurisdiction over the complaint under title I; or

(B) The EEOC has jurisdiction over the complaint under title I, but the complainant, either independently, or following receipt of the notification letter required to be sent to the complainant pursuant to paragraph (c)(2)(ii) of this section, specifically requests that the complaint be investigated by the section 504 agency.

(ii) Prior to referring an individual complaint of employment discrimination to the EEOC pursuant to paragraph (c)(2)(i) of this section (but not prior to making such a referral pursuant to paragraph (c)(1) of this section), a section 504 agency that otherwise has jurisdiction over the complaint shall promptly notify the complainant, in writing, of its intention to make such a referral. The notice letter shall:

(A) Inform the complainant that, unless the agency receives a written request from the complainant within twenty days of the date of the notice letter requesting that the agency retain the complaint for investigation, the agency will forward the complaint to the EEOC for investigation and processing; and

(B) Describe the basic procedural differences between an investigation under section 504 and an investigation under title I, and inform the complainant of the potential for differing remedies under each statute.

(3) *Referral by a designated agency.* A designated agency that does not have section 504 jurisdiction over a complaint of employment discrimination and that has determined that the EEOC may have jurisdiction over the complaint under title I shall promptly refer the complaint to the EEOC.

(4) *Processing of complaints referred to the EEOC.* (i) A complaint referred to the EEOC in accordance with this section by an agency with jurisdiction over the complaint under section 504 shall be deemed to be a dual-filed complaint under section 504 and title I. When a section 504 agency with jurisdiction over a complaint refers the complaint to the EEOC, the section 504

agency shall defer its processing of the complaint pursuant to §—.10, pending resolution by the EEOC.

(ii) A complaint referred to the EEOC by an agency that has jurisdiction over the complaint solely under title II (and not under section 504) will be treated as a complaint filed under title I only.

(iii) Any complaint referred to the EEOC pursuant to this section shall be processed by the EEOC under its title I procedures.

(d) *Retention by the agency for investigation*—(1) *Retention by a section 504 agency*. A section 504 agency shall retain a complaint for investigation when the agency determines that it has jurisdiction over the complaint under section 504, and one or more of the following conditions are met:

(i) The EEOC does not have jurisdiction over the complaint under title I; or

(ii) The EEOC has jurisdiction over the complaint, but the complainant elects to have the section 504 agency process the complaint and the section 504 agency receives a written request from the complainant for section 504 agency processing within twenty days of the date of the notice letter required to be sent pursuant to paragraph (c)(2)(ii) of this section; or

(iii) The complaint alleges discrimination in both employment and in other practices or services of the respondent that are covered by section 504; or

(iv) The complaint alleges a pattern or practice of employment discrimination.

(2) *Retention by a designated agency*. A designated agency that does not have jurisdiction over the complaint under section 504 shall retain a complaint for investigation when the agency determines that it has jurisdiction over the complaint under title II of the ADA and that the EEOC does not have jurisdiction over the complaint under title I.

(3) *Processing of complaints retained by an agency*. Any complaint retained for investigation and processing by an agency pursuant to paragraphs (d)(1) and (d)(2) of this section will be investigated and processed under section 504, title II, or both, as applicable, and will not be considered to be dual filed under title I.

§ 37.7 Processing of charges of employment discrimination filed with the EEOC.

(a) *EEOC determination of jurisdiction*. Upon receipt of a charge of employment discrimination, the EEOC shall:

(1) Determine whether it has jurisdiction over the charge under title I of the ADA. If it has jurisdiction, except as provided in paragraph (b)(2) of this section, the EEOC shall process the charge pursuant to title I procedures.

(2) If the EEOC determines that it does not have jurisdiction under title I, the EEOC shall promptly refer the charge to the Civil Rights Division. The Civil Rights Division shall determine if a Federal agency may have jurisdiction over the charge under section 504 or title II, and, if so, shall refer the charge to a section 504 agency or to a designated agency with jurisdiction over the complaint.

(b) *Retention by the EEOC for investigation*. (1) The EEOC shall retain a charge for investigation when it determines that it has jurisdiction over the charge under title I.

(2) *Referral to an agency*. Any charge retained by the EEOC for investigation and processing will be investigated and processed under title I only, and will not be deemed dual filed under section 504, except that ADA cause charges (as defined in 29 CFR 1601.21) that also fall within the jurisdiction of a section 504 agency and that the EEOC (or the Civil Rights Division, if such a charge is against a government, governmental agency, or political subdivision) has declined to litigate shall be referred to the appropriate section 504 agency for review of the file and any administrative or other action deemed appropriate under section 504. Such charges shall be deemed complaints, dual filed under section 504, solely for the purposes of the agency review and action described in this paragraph. The date of such dual filing shall be deemed to be the date the complaint was received by the EEOC.

§37.8 Processing of complaints or charges of employment discrimination filed with both the EEOC and a section 504 agency.

(a) *Procedures for handling dual-filed complaints or charges.* As between the EEOC and a section 504 agency, except as provided in paragraph (e) of this section, a complaint or charge of employment discrimination that is dual filed with both the EEOC and a section 504 agency shall be processed as follows:

(1) *EEOC processing.* The EEOC shall investigate and process the charge when the EEOC determines that it has jurisdiction over the charge under title I and the charge solely alleges employment discrimination against an individual, unless the charging party elects to have the section 504 agency process the charge and the section 504 agency receives a written request from the complainant for section 504 agency processing within twenty days of the date of the notice letter required to be sent pursuant to §37.6(c)(2)(ii).

(2) *Section 504 agency processing.* A section 504 agency shall investigate and process the complaint when the agency determines that it has jurisdiction over the complaint under section 504, and:

(i) The complaint alleges discrimination in both employment and in other practices or services of the respondent; or

(ii) The complaint alleges a pattern or practice of discrimination in employment; or

(iii) In the case of a complaint solely alleging employment discrimination against an individual, the complainant elects to have a section 504 agency process the complaint and the section 504 agency receives a written request from the complainant for section 504 agency processing within twenty days of the date of the notice letter required to be sent pursuant to §37.6(c)(2)(ii).

(b) *Referral to the Civil Rights Division.* If the EEOC determines that it does not have jurisdiction under title I, and the section 504 agency determines that it does not have jurisdiction under section 504 or title II, the complaint or charge shall be promptly referred to the Civil Rights Division. The Civil Rights Division shall determine if another Federal agency may have jurisdiction over the complaint under section 504 or title II, and, if so, shall promptly refer the complaint to a section 504 or a designated agency with jurisdiction over the complaint.

(c) *Procedures for determining whether a complaint or charge has been dual filed.* The EEOC and each agency with jurisdiction to investigate and process complaints of employment discrimination under section 504 shall jointly develop procedures for determining whether complaints or charges of discrimination have been dual filed with the EEOC and with one or more other agencies.

(d) *Notification of deferral.* The agency required to process a dual-filed complaint or charge under this section shall notify the complainant or charging party and the respondent that the complaint or charge was dual filed with one or more other agencies and that such other agencies have agreed to defer processing and will take no further action except as provided in §37.10 or §37.11, as applicable.

(e) *Exceptions.* When special circumstances make deferral as provided in this section inappropriate, the EEOC, and an agency with investigative authority under section 504, may jointly determine to reallocate investigative responsibilities. Special circumstances include, but are not limited to, cases in which the EEOC has already commenced its investigation at the time that the agency discovers that the complaint or charge is a dual-filed complaint or charge in which the complainant has elected section 504 processing, alleged discrimination in both employment and in other practices or services of the respondent, or alleged a pattern or practice of employment discrimination.

§37.9 Processing of complaints or charges of employment discrimination filed with a designated agency and either a section 504 agency, the EEOC, or both.

(a) *Designated agency processing.* A designated agency shall investigate and process a complaint that has been filed with it and with the EEOC, a section 504 agency, or both, when either of the following conditions is met:

(1) The designated agency determines that it has jurisdiction over the complaint under title II and that neither the EEOC nor a section 504 agency (other than the designated agency, if the designated agency is also a section 504 agency) has jurisdiction over the complaint; or

(2) The designated agency determines that it has jurisdiction over the complaint under section 504 and the complaint meets the requirements for processing by a section 504 agency set forth in § 37.8(a)(2).

(b) *Referral by a designated agency*. A designated agency that has jurisdiction over a complaint solely under title II (and not under section 504) shall forward a complaint that has been filed with it and with the EEOC, a section 504 agency, or both, to either the EEOC or to a section 504 agency, as follows:

(1) If the designated agency determines that the EEOC is the sole agency, other than the designated agency, with jurisdiction over the complaint, the designated agency shall forward the complaint to the EEOC for processing under title I; or

(2) If the designated agency determines that the section 504 agency is the sole agency, other than the designated agency, with jurisdiction over the complaint, the designated agency shall forward the complaint to the section 504 agency for processing under section 504; or

(3) If the designated agency determines that both the EEOC and a section 504 agency have jurisdiction over the complaint, the designated agency shall forward the complaint to the EEOC if it determines that the complaint solely alleges employment discrimination against an individual, or it shall forward the complaint to the section 504 agency if it determines that the complaint meets the requirements for processing by a section 504 agency set out in § 37.8(a)(2)(i) or (a)(2)(ii).

§ 37.10 Section 504 agency review of deferred complaints.

(a) *Deferral by the section 504 agency*. When a section 504 agency refers a complaint to the EEOC pursuant to § 37.6(c)(2) or when it is determined that, as between the EEOC and a section 504 agency, the EEOC is the agency that shall process a dual-filed complaint or charge under § 37.8(a)(1) or § 37.8(e), the section 504 agency shall defer further action until:

(1) The EEOC issues a no cause finding and a notice of right-to-sue pursuant to 29 CFR 1601.19; or

(2) The EEOC enters into a conciliation agreement; or

(3) The EEOC issues a cause finding and a notice of failure of conciliation pursuant to 29 CFR 1601.21, and:

(i) If the recipient is not a government, governmental agency, or political subdivision, the EEOC completes enforcement proceedings or issues a notice of right-to-sue in accordance with 29 CFR 1601.28; or

(ii) If the recipient is a government, governmental agency, or political subdivision, the EEOC refers the charge to the Civil Rights Division in accordance with 29 CFR 1601.29, and the Civil Rights Division completes enforcement proceedings or issues a notice of right-to-sue in accordance with 29 CFR 1601.28(d); or

(4) The EEOC or, when a case has been referred pursuant to 29 CFR 1601.29, the Civil Rights Division, otherwise resolves the charge.

(b) *Notification of the deferring agency*. The EEOC or the Civil Rights Division, as appropriate, shall notify the agency that has deferred processing of the charge upon resolution of any dual-filed complaint or charge.

(c) *Agency review*. After receipt of notification that the EEOC or the Civil Rights Division, as appropriate, has resolved the complaint or charge, the agency shall promptly determine what further action by the agency is warranted. In reaching that determination, the agency shall give due weight to the findings and conclusions of the EEOC and to those of the Civil Rights Division, as applicable. If the agency proposes to take an action inconsistent with the EEOC's or the Civil Rights Division's findings and conclusions as to whether a violation has occurred, the agency shall notify in writing the Assistant Attorney General, the Chairman of the EEOC, and the head of the EEOC office that processed the complaint. In the written notification, the agency shall state the action that it

proposes to take and the basis of its decision to take such action.

(d) *Provision of information.* Upon written request, the EEOC or the Civil Rights Division shall provide the section 504 agency with any materials relating to its resolution of the charge, including its findings and conclusions, investigative reports and files, and any conciliation agreement.

§ 37.11 EEOC review of deferred charges.

(a) *Deferral by the EEOC.* When it is determined that a section 504 agency is the agency that shall process a dual-filed complaint or charge under § 37.8(a)(2) or § 37.8(e), the EEOC shall defer further action until the section 504 agency takes one of the following actions:

(1) Makes a finding that a violation has not occurred;

(2) Enters into a voluntary compliance agreement;

(3) Following a finding that a violation has occurred, refers the complaint to the Civil Rights Division for judicial enforcement and the Civil Rights Division resolves the complaint;

(4) Following a finding that a violation has occurred, resolves the complaint through final administrative enforcement action; or

(5) Otherwise resolves the charge.

(b) *Notification of the EEOC.* The section 504 agency shall notify the EEOC upon resolution of any dual-filed complaint or charge.

(c) *Agency review.* After receipt of notification that the section 504 agency has resolved the complaint, the EEOC shall promptly determine what further action by the EEOC is warranted. In reaching that determination, the EEOC shall give due weight to the section 504 agency's findings and conclusions. If the EEOC proposes to take an action inconsistent with the section 504 agency's findings and conclusions as to whether a violation has occurred, the EEOC shall notify in writing the Assistant Attorney General, the Chairman of the EEOC, and the head of the section 504 agency that processed the complaint. In the written notification, the EEOC shall state the action that it proposes to take and the basis of its decision to take such action.

(d) *Provision of information.* Upon written request, the section 504 agency shall provide the EEOC with any materials relating to its resolution of the complaint, including its conclusions, investigative reports and files, and any voluntary compliance agreement.

§ 37.12 Standards.

In any investigation, compliance review, hearing or other proceeding, the standards used to determine whether section 504 has been violated in a complaint alleging employment discrimination shall be the standards applied under title I of the ADA and the provisions of sections 501 through 504, and 510, of the ADA, as such sections relate to employment. Section 504 agencies shall consider the regulations and appendix implementing title I of the ADA, set forth at 29 CFR part 1630, and case law arising under such regulations, in determining whether a recipient of Federal financial assistance has engaged in an unlawful employment practice.

§ 37.13 Agency specific memoranda of understanding.

When a section 504 agency amends its regulations to make them consistent with title I of the ADA, the EEOC and the individual section 504 agency may elect to enter into a memorandum of understanding providing for the investigation and processing of complaints dual filed under both section 504 and title I of the ADA by the section 504 agency.

PART 38—EQUAL TREATMENT FOR FAITH-BASED ORGANIZATIONS

Sec.

38.1 Discretionary grants, contracts, and cooperative agreements.

38.2 Formula grants.

AUTHORITY: 28 U.S.C. 509; 5 U.S.C. 301; E.O. 13279, 67 FR 77141, 3 CFR, 2002 Comp., p. 258; 18 U.S.C. 4001, 4042, 5040; 20 U.S.C. 1152; 21 U.S.C. 871; 25 U.S.C. 3681; Pub. L. 107–273, 116 Stat. 1758 (42 U.S.C. 3751, 3753, 3762b, 3782, 3796dd–1, 3796dd–7, 3796gg–1, 3796gg–0b, 3796gg–3, 3796h, 3796ii–2, 3797u–3, 3797w, 5611, 5672, 10604, 14071).

SOURCE: Order No. 2703–2004, 69 FR 2838, Jan. 21, 2004, unless otherwise noted.

§ 38.1 Discretionary grants, contracts, and cooperative agreements.

(a) Religious organizations are eligible, on the same basis as any other organization, to participate in any Department program for which they are otherwise eligible. Neither the Department nor any State or local government receiving funds under any Department program shall, in the selection of service providers, discriminate for or against an organization on the basis of the organization's religious character or affiliation. As used in this section, ''program'' refers to a grant, contract, or cooperative agreement funded by a discretionary grant from the Department. As used in this section, the term ''grantee'' includes a recipient of a grant, a signatory to a cooperative agreement, or a contracting party.

(b) (1) Organizations that receive direct financial assistance from the Department under any Department program may not engage in inherently religious activities, such as worship, religious instruction, or proselytization, as part of the programs or services funded with direct financial assistance from the Department. If an organization conducts such activities, the activities must be offered separately, in time or location, from the programs or services funded with direct financial assistance from the Department, and participation must be voluntary for beneficiaries of the programs or services funded with such assistance.

(2) The restrictions on inherently religious activities set forth in paragraph (b)(1) of this section do not apply to programs where Department funds are provided to chaplains to work with inmates in prisons, detention facilities, or community correction centers, or where Department funds are provided to religious or other organizations for programs in prisons, detention facilities, or community correction centers, in which such organizations assist chaplains in carrying out their duties.

(c) A religious organization that participates in the Department-funded programs or services will retain its independence from Federal, State, and local governments, and may continue to carry out its mission, including the definition, practice, and expression of its religious beliefs, provided that it does not use direct financial assistance from the Department to support any inherently religious activities, such as worship, religious instruction, or proselytization. Among other things, a faith-based organization that receives financial assistance from the Department may use space in its facilities, without removing religious art, icons, scriptures, or other religious symbols. In addition, a religious organization that receives financial assistance from the Department retains its authority over its internal governance, and it may retain religious terms in its organization's name, select its board members on a religious basis, and include religious references in its organization's mission statements and other governing documents.

(d) An organization that participates in programs funded by direct financial assistance from the Department shall not, in providing services, discriminate against a program beneficiary or prospective program beneficiary on the basis of religion or religious belief.

(e) No grant document, agreement, covenant, memorandum of understanding, policy, or regulation that is used by the Department or a State or local government in administering financial assistance from the Department shall require only religious organizations to provide assurances that they will not use monies or property for inherently religious activities. Any such restrictions shall apply equally to religious and non-religious organizations. All organizations that participate in Department programs, including religious ones, must carry out eligible activities in accordance with all program requirements and other applicable requirements governing the conduct of Department-funded activities, including those prohibiting the use of direct financial assistance from the Department to engage in inherently religious activities. No grant document, agreement, covenant, memorandum of understanding, policy, or regulation that is used by the Department or a State or local government in administering financial assistance from the Department shall disqualify religious organizations from participating in the Department's programs because such

organizations are motivated or influenced by religious faith to provide social services, or because of their religious character or affiliation.

(f) *Exemption from Title VII employment discrimination requirements.* A religious organization's exemption from the Federal prohibition on employment discrimination on the basis of religion, set forth in section 702(a) of the Civil Rights Act of 1964, 42 U.S.C. 2000e–1, is not forfeited when the organization receives direct or indirect financial assistance from the Department. Some Department programs, however, contain independent statutory provisions requiring that all grantees agree not to discriminate in employment on the basis of religion. Accordingly, grantees should consult with the appropriate Department program office to determine the scope of any applicable requirements.

(g) In general, the Department does not require that a grantee, including a religious organization, obtain tax-exempt status under section 501(c)(3) of the Internal Revenue Code to be eligible for funding under Department programs. Many grant programs, however, do require an organization to be a ''nonprofit organization'' in order to be eligible for funding. Individual solicitations that require organizations to have nonprofit status will specifically so indicate in the eligibility section of a solicitation. In addition, any solicitation that requires an organization to maintain tax-exempt status will expressly state the statutory authority for requiring such status. Grantees should consult with the appropriate Department program office to determine the scope of any applicable requirements. In Department programs in which an applicant must show that it is a nonprofit organization, the applicant may do so by any of the following means:

(1) Proof that the Internal Revenue Service currently recognizes the applicant as an organization to which contributions are tax deductible under section 501(c)(3) of the Internal Revenue Code;

(2) A statement from a State taxing body or the State secretary of state certifying that:

(i) The organization is a nonprofit organization operating within the State; and

(ii) No part of its net earnings may lawfully benefit any private shareholder or individual;

(3) A certified copy of the applicant's certificate of incorporation or similar document that clearly establishes the nonprofit status of the applicant; or

(4) Any item described in paragraphs (b)(1) through (3) of this section if that item applies to a State or national parent organization, together with a statement by the State or parent organization that the applicant is a local nonprofit affiliate.

(h) *Effect on State and local funds.* If a State or local government voluntarily contributes its own funds to supplement activities carried out under the applicable programs, the State or local government has the option to separate out the Federal funds or commingle them. If the funds are commingled, the provisions of this section shall apply to all of the commingled funds in the same manner, and to the same extent, as the provisions apply to the Federal funds.

(i) To the extent otherwise permitted by Federal law, the restrictions on inherently religious activities set forth in this section do not apply where Department funds are provided to religious organizations as a result of a genuine and independent private choice of a beneficiary, provided the religious organizations otherwise satisfy the requirements of the program. A religious organization may receive such funds as the result of a beneficiary's genuine and independent choice if, for example, a beneficiary redeems a voucher, coupon, or certificate, allowing the beneficiary to direct where funds are to be paid, or a similar funding mechanism provided to that beneficiary and designed to give that beneficiary a choice among providers.

§ 38.2 Formula grants.

(a) Religious organizations are eligible, on the same basis as any other organization, to participate in any Department program for which they are

otherwise eligible. Neither the Department nor any State or local government receiving funds under any Department program shall, in the selection of service providers, discriminate for or against an organization on the basis of the organization's religious character or affiliation. As used in this section, ''program'' refers to a grant, contract, or cooperative agreement funded by a formula or block grant from the Department. As used in this section, the term ''grantee'' includes a recipient of a grant, a signatory to a cooperative agreement, or a contracting party.

(b) (1) Organizations that receive direct financial assistance from the Department may not engage in inherently religious activities, such as worship, religious instruction, or proselytization, as part of the programs or services funded with direct financial assistance from the Department. If an organization conducts such activities, the activities must be offered separately, in time or location, from the programs or services funded with direct financial assistance from the Department, and participation must be voluntary for beneficiaries of the programs or services funded with such assistance.

(2) The restrictions on inherently religious activities set forth in paragraph (b)(1) of this section do not apply to programs where Department funds are provided to chaplains to work with inmates in prisons, detention facilities, or community correction centers, or where Department funds are provided to religious or other organizations for programs in prisons, detention facilities, or community correction centers, in which such organizations assist chaplains in carrying out their duties.

(c) A religious organization that participates in the Department-funded programs or services will retain its independence from Federal, State, and local governments, and may continue to carry out its mission, including the definition, practice, and expression of its religious beliefs, provided that it does not use direct financial assistance from the Department to support any inherently religious activities, such as worship, religious instruction, or proselytization. Among other things, a faith-based organization that receives financial assistance from the Department may use space in its facilities, without removing religious art, icons, scriptures, or other religious symbols. In addition, a religious organization that receives financial assistance from the Department retains its authority over its internal governance, and it may retain religious terms in its organization's name, select its board members on a religious basis, and include religious references in its organization's mission statements and other governing documents.

(d) An organization that participates in programs funded by direct financial assistance from the Department shall not, in providing services, discriminate against a program beneficiary or prospective program beneficiary on the basis of religion or religious belief.

(e) No grant document, agreement, covenant, memorandum of understanding, policy, or regulation that is used by the Department or a State or local government in administering financial assistance from the Department shall require only religious organizations to provide assurances that they will not use monies or property for inherently religious activities. Any such restrictions shall apply equally to religious and non-religious organizations. All organizations that participate in Department programs, including religious ones, must carry out eligible activities in accordance with all program requirements and other applicable requirements governing the conduct of Department-funded activities, including those prohibiting the use of direct financial assistance to engage in inherently religious activities. No grant document, agreement, covenant, memorandum of understanding, policy, or regulation that is used by the Department or a State or local government in administering financial assistance from the Department shall disqualify religious organizations from participating in the Department's programs because such organizations are motivated or influenced by religious faith to provide social services, or because of their religious character or affiliation.

(f) *Exemption from Title VII employment discrimination requirements.* A religious organization's exemption from

the Federal prohibition on employment discrimination on the basis of religion, set forth in section 702(a) of the Civil Rights Act of 1964, 42 U.S.C. 2000e–1, is not forfeited when the religious organization receives direct or indirect financial assistance from Department. Some Department programs, however, contain independent statutory provisions requiring that all grantees agree not to discriminate in employment on the basis of religion. Accordingly, grantees should consult with the appropriate Department program office to determine the scope of any applicable requirements.

(g) In general, the Department does not require that a grantee, including a religious organization, obtain tax-exempt status under section 501(c)(3) of the Internal Revenue Code to be eligible for funding under Department programs. Many grant programs, however, do require an organization to be a ''nonprofit organization'' in order to be eligible for funding. Individual solicitations that require organizations to have nonprofit status will specifically so indicate in the eligibility section of a solicitation. In addition, any solicitation that requires an organization to maintain tax-exempt status will expressly state the statutory authority for requiring such status. Grantees should consult with the appropriate Department program office to determine the scope of any applicable requirements. In Department programs in which an applicant must show that it is a nonprofit organization, the applicant may do so by any of the following means:

(1) Proof that the Internal Revenue Service currently recognizes the applicant as an organization to which contributions are tax deductible under section 501(c)(3) of the Internal Revenue Code;

(2) A statement from a State taxing body or the State secretary of state certifying that:

(i) The organization is a nonprofit organization operating within the State; and

(ii) No part of its net earnings may lawfully benefit any private shareholder or individual;

(3) A certified copy of the applicant's certificate of incorporation or similar document that clearly establishes the nonprofit status of the applicant; or

(4) Any item described in paragraphs (b)(1) through (3) of this section if that item applies to a State or national parent organization, together with a statement by the State or parent organization that the applicant is a local nonprofit affiliate.

(h) *Effect on State and local funds.* If a State or local government voluntarily contributes its own funds to supplement activities carried out under the applicable programs, the State or local government has the option to separate out the Federal funds or commingle them. If the funds are commingled, the provisions of this section shall apply to all of the commingled funds in the same manner, and to the same extent, as the provisions apply to the Federal funds.

(i) To the extent otherwise permitted by Federal law, the restrictions on inherently religious activities set forth in this section do not apply where Department funds are provided to religious organizations as a result of a genuine and independent private choice of a beneficiary, provided the religious organizations otherwise satisfy the requirements of the program. A religious organization may receive such funds as the result of a beneficiary's genuine and independent choice if, for example, a beneficiary redeems a voucher, coupon, or certificate, allowing the beneficiary to direct where funds are to be paid, or a similar funding mechanism provided to that beneficiary and designed to give that beneficiary a choice among providers.

PART 39—ENFORCEMENT OF NONDISCRIMINATION ON THE BASIS OF HANDICAP IN PROGRAMS OR ACTIVITIES CONDUCTED BY THE DEPARTMENT OF JUSTICE

Sec.

39.101 Purpose.
39.102 Application.
39.103 Definitions.
39.104–39.109 [Reserved]
39.110 Self-evaluation.
39.111 Notice.
39.112–39.129 [Reserved]
39.130 General prohibitions against discrimination.
39.131–39.139 [Reserved]

39.140 Employment.
39.141–39.148 [Reserved]
39.149 Program accessibility: Discrimination prohibited.
39.150 Program accessibility: Existing facilities.
39.151 Program accessibility: New construction and alterations.
39.152–39.159 [Reserved]
39.160 Communications.
39.161–39.169 [Reserved]
39.170 Compliance procedures.

AUTHORITY: 29 U.S.C. 794.

SOURCE: Order No. 1065–84, 49 FR 35734, Sept. 11, 1984, unless otherwise noted.

§ 39.101 Purpose.

This part effectuates section 119 of the Rehabilitation, Comprehensive Services, and Developmental Disabilities Amendments of 1978, which amended section 504 of the Rehabilitation Act of 1973 to prohibit discrimination on the basis of handicap in programs or activities conducted by Executive agencies or the U.S. Postal Service.

§ 39.102 Application.

This part applies to all programs or activities conducted by the agency.

§ 39.103 Definitions.

For purposes of this part, the term—

Agency means the Department of Justice.

Assistant Attorney General means the Assistant Attorney General, Civil Rights Division, U.S. Department of Justice.

Auxiliary aids means services or devices that enable persons with impaired sensory, manual, or speaking skills to have an equal opportunity to participate in, and enjoy the benefits of, programs or activities conducted by the agency. For example, auxiliary aids useful for persons with impaired vision include readers, Brailled materials, audio recordings, telecommunications devices and other similar services and devices. Auxiliary aids useful for persons with impaired hearing include telephone handset amplifiers, telephones compatible with hearing aids, telecommunication devices for deaf persons (TDD's), interpreters, notetakers, written materials, and other similar services and devices.

Complaint Adjudication Officer means the Complaint Adjudication Officer appointed by the Assistant Attorney General for Civil Rights.

Complete complaint means a written statement that contains the complainant's name and address and describes the agency's alleged discriminatory action in sufficient detail to inform the agency of the nature and date of the alleged violation of section 504. It shall be signed by the complainant or by someone authorized to do so on his or her behalf.

Facility means all or any portion of buildings, structures, equipment, roads, walks, parking lots, rolling stock or other conveyances, or other real or personal property.

Handicapped person means any person who has a physical or mental impairment that substantially limits one or more major life activities, has a record of such an impairment, or is regarded as having such an impairment. As used in this definition, the phrase:

(1) *Physical or mental impairment* includes—

(i) Any physiological disorder or condition, cosmetic disfigurement, or anatomical loss affecting one or more of the following body systems: Neurological; musculoskeletal; special sense organs; respiratory, including speech organs; cardiovascular; reproductive; digestive; genitorurinary; hemic and lymphatic; skin; and endocrine; or

(ii) Any mental or psychological disorder, such as mental retardation, organic brain syndrome, emotional or mental illness, and specific learning disabilities. The term ''physical or mental impairment'' includes, but is not limited to, such diseases and conditions as orthopedic, visual, speech, and hearing impairments, cerebral palsy, epilepsy, muscular dystrophy, multiple sclerosis, cancer, heart disease, diabetes, mental retardation, emotional illness, and drug addiction and alcoholism.

(2) *Major life activities* includes functions such as caring for one's self, performing manual tasks, walking, seeing, hearing, speaking, breathing, learning, and working.

(3) *Has a record of such an impairment* means has a history of, or has been misclassified as having, a mental or

physical impairment that substantially limits one or more major life activities.

(4) *Is regarded as having an impairment* means—

(i) Has a physical or mental impairment that does not substantially limit major life activities but is treated by the agency as constituting such a limitation;

(ii) Has a physical or mental impairment that substantially limits major life activities only as a result of the attitudes of others toward such impairment; or

(iii) Has none of the impairments defined in subparagraph (1) of this definition but is treated by the agency as having such an impairment.

Official or *Responsible Official* means the Director of Equal Employment Opportunity for the Department of Justice or his or her designee.

Qualified handicapped person means—

(1) With respect to any agency program or activity under which a person is required to perform services or to achieve a level of accomplishment, a handicapped person who meets the essential eligibility requirements and who can achieve the purpose of the program or activity without modifications in the program or activity that the agency can demonstrate would result in a fundamental alteration in its nature; or

(2) With respect to any other program or activity, a handicapped person who meets the essential eligibility requirements for participation in, or receipt of benefits from, that program or activity.

Respondent means the organizational unit in which a complainant alleges that discrimination occurred.

Section 504 means section 504 of the Rehabilitation Act of 1973 (Pub. L. 93–112, 87 Stat. 394 (29 U.S.C. 794)), as amended by the Rehabilitation Act Amendments of 1974 (Pub. L. 93–516, 88 Stat. 1617), and the Rehabilitation, Comprehensive Services, and Developmental Disabilities Amendments of 1978 (Pub. L. 95–602, 92 Stat. 2955). As used in this part, section 504 applies only to programs or activities conducted by Executive agencies and not to federally assisted programs.

§§ 39.104–39.109 [Reserved]

§ 39.110 Self-evaluation.

(a) The agency shall, by October 11, 1985, evaluate its current policies and practices, and the effects thereof, that do not or may not meet the requirements of this part, and, to the extent modification of any such policies and practices is required, the agency shall proceed to make the necessary modifications.

(b) The agency shall provide an opportunity to interested persons, including handicapped persons or organizations representing handicapped persons, to participate in the self-evaluation process by submitting comments (both oral and written).

(c) The agency shall, until October 11, 1987, maintain on file and make available for public inspection:

(1) A description of areas examined and any problems identified, and

(2) A description of any modifications made.

§ 39.111 Notice.

The agency shall make available to employees, applicants, participants, beneficiaries, and other interested persons such information regarding the provisions of this part and its applicability to the program or activities conducted by the agency, and make such information available to them in such manner as the Attorney General finds necessary to apprise such persons of the protections against discrimination assured them by section 504 and this regulation.

§§ 39.112–39.129 [Reserved]

§ 39.130 General prohibitions against discrimination.

(a) No qualified handicapped person shall, on the basis of handicap, be excluded from participation in, be denied the benefits of, or otherwise be subjected to discrimination under any program or activity conducted by the agency.

(b)(1) The agency, in providing any aid, benefit, or service, may not, directly or through contractual, licensing, or other arrangements, on the basis of handicap—

(i) Deny a qualified handicapped person the opportunity to participate in or benefit from the aid, benefit, or service;

(ii) Afford a qualified handicapped person an opportunity to participate in or benefit from the aid, benefit, or service that is not equal to that afforded others;

(iii) Provide a qualified handicapped person with an aid, benefit, or service that is not as effective in affording equal opportunity to obtain the same result, to gain the same benefit, or to reach the same level of achievement as that provided to others;

(iv) Provide different or separate aid, benefits, or services to handicapped persons or to any class of handicapped persons than is provided to others unless such action is necessary to provide qualified handicapped persons with aid, benefits, or services that are as effective as those provided to others;

(v) Deny a qualified handicapped person the opportunity to participate as a member of planning or advisory boards; or

(vi) Otherwise limit a qualified handicapped person in the enjoyment of any right, privilege, advantage, or opportunity enjoyed by others receiving the aid, benefit, or service.

(2) The agency may not deny a qualified handicapped person the opportunity to participate in programs or activities that are not separate or different, despite the existence of permissibly separate or different programs or activities.

(3) The agency may not, directly or through contractual or other arrangements, utilize criteria or methods of administration the purpose or effect of which would—

(i) Subject qualified handicapped persons to discrimination on the basis of handicap; or

(ii) Defeat or substantially impair accomplishment of the objectives of a program or activity with respect to handicapped persons.

(4) The agency may not, in determining the site or location of a facility, make selections the purpose or effect of which would—

(i) Exclude handicapped persons from, deny them the benefits of, or otherwise subject them to discrimination under any program or activity conducted by the agency; or

(ii) Defeat or substantially impair the accomplishment of the objectives of a program or activity with respect to handicapped persons.

(5) The agency, in the selection of procurement contractors, may not use criteria that subject qualified handicapped persons to discrimination on the basis of handicap.

(6) The agency may not administer a licensing or certification program in a manner that subjects qualified handicapped persons to discrimination on the basis of handicap, nor may the agency establish requirements for the programs or activities of licensees or certified entities that subject qualified handicapped persons to discrimination on the basis of handicap. However, the programs or activities of entities that are licensed or certified by the agency are not, themselves, covered by this part.

(c) The exclusion of nonhandicapped persons from the benefits of a program limited by Federal statute or Executive order to handicapped persons or the exclusion of a specific class of handicapped persons from a program limited by Federal statute or Executive order to a different class of handicapped persons is not prohibited by this part.

(d) The agency shall administer programs and activities in the most integrated setting appropriate to the needs of qualified handicapped persons.

§§ 39.131–39.139 [Reserved]

§ 39.140 Employment.

No qualified handicapped person shall, on the basis of handicap, be subjected to discrimination in employment under any program or activity conducted by the agency. The definitions, requirements, and procedures of section 501 of the Rehabilitation Act of 1973 (29 U.S.C. 791), as established by the Equal Employment Opportunity Commission in 29 CFR part 1613, shall apply to employment in federally conducted programs or activities.

§§ 39.141–39.148 [Reserved]

§ 39.149 Program accessibility: Discrimination prohibited.

Except as otherwise provided in § 39.150, no qualified handicapped person shall, because the agency's facilities are inaccessible to or unusable by handicapped persons, be denied the benefits of, be excluded from participation in, or otherwise be subjected to discrimination under any program or activity conducted by the agency.

§ 39.150 Program accessibility: Existing facilities.

(a) *General.* The agency shall operate each program or activity so that the program or activity, when viewed in its entirety, is readily accessible to and usable by handicapped persons. This paragraph does not—

(1) Necessarily require the agency to make each of its existing facilities accessible to and usable by handicapped persons;

(2) Require the agency to take any action that it can demonstrate would result in a fundamental alteration in the nature of a program or activity or in undue financial and administrative burdens. In those circumstances where agency personnel believe that the proposed action would fundamentally alter the program or activity or would result in undue financial and administrative burdens, the agency has the burden of proving that compliance with § 39.150(a) would result in such alterations or burdens. The decision that compliance would result in such alteration or burdens must be made by the Attorney General or his or her designee after considering all agency resources available for use in the funding and operation of the conducted program or activity, and must be accompanied by a written statement of the reasons for reaching that conclusion. If an action would result in such an alteration or such burdens, the agency shall take any other action that would not result in such an alteration or such burdens but would nevertheless ensure that handicapped persons receive the benefits and services of the program or activity.

(b) *Methods.* The agency may comply with the requirements of this section through such means as redesign of equipment, reassignment of services to accessible buildings, assignment of aides to beneficiaries, home visits, delivery of services at alternate accessible sites, alteration of existing facilities and construction of new facilities, use of accessible rolling stock, or any other methods that result in making its programs or activities readily accessible to and usable by handicapped persons. The agency is not required to make structural changes in existing facilities where other methods are effective in achieving compliance with this section. The agency, in making alterations to existing buildings, shall meet accessibility requirements to the extent compelled by the Architectural Barriers Act of 1968, as amended (42 U.S.C. 4151–4157), and any regulations implementing it. In choosing among available methods for meeting the requirements of this section, the agency shall give priority to those methods that offer programs and activities to qualified handicapped persons in the most integrated setting appropriate.

(c) *Time period for compliance.* The agency shall comply with the obligations established under this section by December 10, 1984, except that where structural changes in facilities are undertaken, such changes shall be made by October 11, 1987, but in any event as expeditiously as possible.

(d) *Transition plan.* In the event that structural changes to facilities will be undertaken to achieve program accessibility, the agency shall develop, by April 11, 1985, a transition plan setting forth the steps necessary to complete such changes. The agency shall provide an opportunity to interested persons, including handicapped persons or organizations representing handicapped persons, to participate in the development of the transition by submitting comments (both oral and written). A copy of the transition plan shall be made available for public inspection. The plan shall, at a minimum—

(1) Identify physical obstacles in the agency's facilities that limit the accessibility of its programs or activities to handicapped persons;

(2) Describe in detail the methods that will be used to make the facilities accessible;

(3) Specify the schedule for taking the steps necessary to achieve compliance with this section and, if the time period of the transition plan is longer than one year, identify steps that will be taken during each year of the transition period; and

(4) Indicate the official responsible for implementation of the plan.

§ 39.151 Program accessibility: New construction and alterations.

Each building or part of a building that is constructed or altered by, on behalf of, or for the use of the agency shall be designed, constructed, or altered so as to be readily accessible to and usable by handicapped persons. The definitions, requirements, and standards of the Architectural Barriers Act (42 U.S.C. 4151–4157), as established in 41 CFR 101–19.600 to 101–19.607, apply to buildings covered by this section.

§§ 39.152–39.159 [Reserved]

§ 39.160 Communications.

(a) The agency shall take appropriate steps to ensure effective communication with applicants, participants, personnel of other Federal entities, and members of the public.

(1) The agency shall furnish appropriate auxiliary aids where necessary to afford a handicapped person an equal opportunity to participate in, and enjoy the benefits of, a program or activity conducted by the agency.

(i) In determining what type of auxiliary aid is necessary, the agency shall give primary consideration to the requests of the handicapped person.

(ii) The agency need not provide individually prescribed devices, readers for personal use or study, or other devices of a personal nature.

(2) Where the agency communicates with applicants and beneficiaries by telephone, telecommunication devices for deaf persons (TDD's) or equally effective telecommunication systems shall be used.

(b) The agency shall ensure that interested persons, including persons with impaired vision or hearing, can obtain information as to the existence and location of accessible services, activities, and facilities.

(c) The agency shall provide signage at a primary entrance to each of its inaccessible facilities, directing users to a location at which they can obtain information about accessible facilities. The international symbol for accessibility shall be used at each primary entrance of an accessible facility.

(d) This section does not require the agency to take any action that it can demonstrate would result in a fundamental alteration in the nature of a program or activity or in undue financial and administrative burdens. In those circumstances where agency personnel believe that the proposed action would fundamentally alter the program or activity or would result in undue financial and administrative burdens, the agency has the burden of proving that compliance with § 39.160 would result in such alteration or burdens. The decision that compliance would result in such alteration or burdens must be made by the Attorney General or his or her designee after considering all agency resources available for use in the funding and operation of the conducted program or activity, and must be accompanied by a written statement of the reasons for reaching that conclusion. If an action required to comply with this section would result in such an alteration or such burdens, the agency shall take any other action that would not result in such an alteration or such burdens but would nevertheless ensure that, to the maximum extent possible, handicapped persons receive the benefits and services of the program or activity.

§§ 39.161–39.169 [Reserved]

§ 39.170 Compliance procedures.

(a) *Applicability*. Except as provided in paragraph (b) of this section, this section applies to all allegations of discrimination on the basis of handicap in programs or activities conducted by the agency.

(b) *Employment complaints*. The agency shall process complaints alleging violations of section 504 with respect to employment according to the procedures established by the Equal Employment Opportunity Commission in 29 CFR part 1613 pursuant to section 501

of the Rehabilitation Act of 1973 (29 U.S.C. 791).

(c) *Responsible Official*. The Responsible Official shall coordinate implementation of this section.

(d) *Filing a complaint*—(1) *Who may file*. (i) Any person who believes that he or she has been subjected to discrimination prohibited by this part may by him or herself or by his or her authorized representative file a complaint with the Official. Any person who believes that any specific class of persons has been subjected to discrimination prohibited by this part and who is a member of that class or the authorized representative of a member of that class may file a complaint with the Official.

(ii) Before filing a complaint under this section, an inmate of a Federal penal institution must exhaust the Bureau of Prisons Administrative Remedy Procedure as set forth in 28 CFR part 542.

(2) *Confidentiality*. The Official shall hold in confidence the identity of any person submitting a complaint, unless the person submits written authorization otherwise, and except to the extent necessary to carry out the purposes of this part, including the conduct of any investigation, hearing, or proceeding under this part.

(3) *When to file*. Complaints shall be filed within 180 days of the alleged act of discrimination, except that complaints by inmates of Federal penal institutions shall be filed within 180 days of the final administrative decision of the Bureau of Prisons under 28 CFR part 542. The Official may extend this time limit for good cause shown. For purposes of determining when a complaint is timely filed under this subparagraph, a complaint mailed to the agency shall be deemed filed on the date it is postmarked. Any other complaint shall be deemed filed on the date it is received by the agency.

(4) *How to file*. Complaints may be delivered or mailed to the Attorney General, the Responsible Official, or agency officials. Complaints should be sent to the Director for Equal Employment Opportunity, U.S. Department of Justice, 10th and Pennsylvania Avenue, NW., Room 1232, Washington, DC 20530. If any agency official other than the Official receives a complaint, he or she shall forward the complaint to the Official immediately.

(e) *Notification to the Architectural and Transportation Barriers Compliance Board*. The agency shall promptly send to the Architectural and Transportation Barriers Compliance Board a copy of any complaint alleging that a building or facility that is subject to the Architectural Barriers Act of 1968, as amended (42 U.S.C. 4151–4157), or section 502 of the Rehabilitation Act, as amended (29 U.S.C. 792), is not readily accessible to and usable by handicapped persons. The agency shall delete the identity of the complainant from the copy of the complaint.

(f) *Acceptance of complaint*. (1) The Official shall accept a complete complaint that is filed in accordance with paragraph (d) of this section and over which the agency has jurisdiction. The Official shall notify the complainant and the respondent of receipt and acceptance of the complaint.

(2) If the Official receives a complaint that is not complete, he or she shall notify the complainant, within 30 days of receipt of the incomplete complaint, that additional information is needed. If the complainant fails to complete the complaint within 30 days of receipt of this notice, the Official shall dismiss the complaint without prejudice.

(3) If the Official receives a complaint over which the agency does not have jurisdiction, the Official shall promptly notify the complainant and shall make reasonable efforts to refer the complaint to the appropriate Government entity.

(g) *Investigation/conciliation*. (1) Within 180 days of the receipt of a complete complaint, the Official shall complete the investigation of the complaint, attempt informal resolution, and, if no informal resolution is achieved, issue a letter of findings.

(2) The Official may require agency employees to cooperate in the investigation and attempted resolution of complaints. Employees who are required by the Official to participate in any investigation under this section shall do so as part of their official duties and during the course of regular duty hours.

(3) The Official shall furnish the complainant and the respondent a copy of the investigative report promptly after receiving it from the investigator and provide the complainant and respondent with an opportunity for informal resolution of the complaint.

(4) If a complaint is resolved informally, the terms of the agreement shall be reduced to writing and made part of the complaint file, with a copy of the agreement provided to the complainant and respondent. The written agreement may include a finding on the issue of discrimination and shall describe any corrective action to which the complainant and respondent have agreed.

(h) *Letter of findings.* If an informal resolution of the complaint is not reached, the Official shall, within 180 days of receipt of the complete complaint, notify the complainant and the respondent of the results of the investigation in a letter sent by certified mail, return receipt requested, containing—

(1) Findings of fact and conclusions of law;

(2) A description of a remedy for each violation found;

(3) A notice of the right of the complainant and respondent to appeal to the Complaint Adjudication Officer; and

(4) A notice of the right of the complainant and respondent to request a hearing.

(i) *Filing an appeal.* (1) Notice of appeal to the Complaint Adjudication Officer, with or without a request for hearing, shall be filed by the complainant or the respondent with the Responsible Official within 30 days of receipt from the Official of the letter required by paragraph (h) of this section.

(2) If a timely appeal without a request for hearing is filed by a party, any other party may file a written request for hearing within the time limit specified in paragraph (i)(1) of this section or within 10 days of the date on which the first timely appeal without a request for hearing was filed, whichever is later.

(3) If no party requests a hearing, the Responsible Official shall promptly transmit the notice of appeal and investigative record to the Complaint Adjudication Officer.

(4) If neither party files an appeal within the time prescribed in paragraph (i)(1) of this section, the Responsible Official shall certify that the letter of findings is the final agency decision on the complaint at the expiration of that time.

(j) *Acceptance of appeal.* The Responsible Official shall accept and process any timely appeal. A party may appeal to the Complaint Adjudication Officer from a decision of the Official that an appeal is untimely. This appeal shall be filed within 15 days of receipt of the decision from the Official.

(k) *Hearing.* (1) Upon a timely request for a hearing, the Responsible Official shall appoint an administrative law judge to conduct the hearing. The administrative law judge shall issue a notice to all parties specifying the date, time, and place of the scheduled hearing. The hearing shall be commenced no earlier than 15 days after the notice is issued and no later than 60 days after the request for a hearing is filed, unless all parties agree to a different date.

(2) The complainant and respondent shall be parties to the hearing. Any interested person or organization may petition to become a party or amicus curiae. The administrative law judge may, in his or her discretion, grant such a petition if, in his or her opinion, the petitioner has a legitimate interest in the proceedings and the participation will not unduly delay the outcome and may contribute materially to the proper disposition of the proceedings.

(3) The hearing, decision, and any administrative review thereof shall be conducted in conformity with 5 U.S.C. 554–557 (sections 5–8 of the Administrative Procedure Act). The administrative law judge shall have the duty to conduct a fair hearing, to take all necessary action to avoid delay, and to maintain order. He or she shall have all powers necessary to these ends, including (but not limited to) the power to—

(i) Arrange and change the date, time, and place of hearings and prehearing conferences and issue notice thereof;

(ii) Hold conferences to settle, simplify, or determine the issues in a hearing, or to consider other matters that

may aid in the expeditious disposition of the hearing;

(iii) Require parties to state their position in writing with respect to the various issues in the hearing and to exchange such statements with all other parties;

(iv) Examine witnesses and direct witnesses to testify;

(v) Receive, rule on, exclude, or limit evidence;

(vi) Rule on procedural items pending before him or her; and

(vii) Take any action permitted to the administrative law judge as authorized by this part or by the provisions of the Administrative Procedure Act (5 U.S.C. 551–559).

(4) Technical rules of evidence shall not apply to hearings conducted pursuant to this paragraph, but rules or principles designed to assure production of credible evidence and to subject testimony to cross-examination shall be applied by the administrative law judge whenever reasonably necessary. The administrative law judge may exclude irrelevant, immaterial, or unduly repetitious evidence. All documents and other evidence offered or taken for the record shall be open to examination by the parties, and opportunity shall be given to refute facts and arguments advanced on either side of the issues. A transcript shall be made of the oral evidence except to the extent the substance thereof is stipulated for the record. All decisions shall be based upon the hearing record.

(5) The costs and expenses for the conduct of a hearing shall be allocated as follows:

(i) Persons employed by the agency, shall, upon request to the agency by the administrative law judge, be made available to participate in the hearing and shall be on official duty status for this purpose. They shall not receive witness fees.

(ii) Employees of other Federal agencies called to testify at a hearing shall, at the request of the administrative law judge and with the approval of the employing agency, be on official duty status during any period of absence from normal duties caused by their testimony, and shall not receive witness fees.

(iii) The fees and expenses of other persons called to testify at a hearing shall be paid by the party requesting their appearance.

(iv) The administrative law judge may require the agency to pay travel expenses necessary for the complainant to attend the hearing.

(v) The respondent shall pay the required expenses and charges for the administrative law judge and court reporter.

(vi) All other expenses shall be paid by the party, the intervening party, or amicus curiae incurring them.

(6) The administrative law judge shall submit in writing recommended findings of fact, conclusions of law, and remedies to all parties and the Complaint Adjudication Officer within 30 days after receipt of the hearing transcripts, or within 30 days after the conclusion of the hearing if no transcript is made. This time limit may be extended with the permission of the Complaint Adjudication Officer.

(7) Within 15 days after receipt of the recommended decision of the administrative law judge, any party may file exceptions to the decision with the Complaint Adjudication Officer. Thereafter, each party will have ten days to file reply exceptions with the Officer.

(l) *Decision*. (1) The Complaint Adjudication Officer shall make the decision of the agency based on information in the investigative record and, if a hearing is held, on the hearing record. The decision shall be made within 60 days of receipt of the transmittal of the notice of appeal and investigative record pursuant to § 39.170(i)(3) or after the period for filing exceptions ends, whichever is applicable. If the Complaint Adjudication Officer determines that he or she needs additional information from any party, he or she shall request the information and provide the other party or parties an opportunity to respond to that information. The Complaint Adjudication Officer shall have 60 days from receipt of the additional information to render the decision on the appeal. The Complaint Adjudication Officer shall transmit his or her decision by letter to the parties. The decision shall set forth the findings, remedial action required, and reasons for the decision. If

the decision is based on a hearing record, the Complaint Adjudication Officer shall consider the recommended decision of the administrative law judge and render a final decision based on the entire record. The Complaint Adjudication Officer may also remand the hearing record to the administrative law judge for a fuller development of the record.

(2) Any respondent required to take action under the terms of the decision of the agency shall do so promptly. The Official may require periodic compliance reports specifying—

(i) The manner in which compliance with the provisions of the decision has been achieved;

(ii) The reasons any action required by the final decision has not yet been taken; and

(iii) The steps being taken to ensure full compliance.

The Complaint Adjudication Officer may retain responsibility for resolving disagreements that arise between the parties over interpretation of the final agency decision, or for specific adjudicatory decisions arising out of implementation.

EDITORIAL NOTE: For the convenience of the user, the ''Supplementary Information'' portion of the document published at 49 FR 35724, Sept. 11, 1984, is set forth below:

SUPPLEMENTARY INFORMATION: On December 16, 1983, the Department of Justice published a Notice of Proposed Rulemaking (NPRM) for the enforcement of section 504 of the Rehabilitation Act of 1973, as amended, which prohibits discrimination on the basis of handicap, as it applies to programs and activities conducted by the Department of Justice. 48 FR 55996. Shortly after the NPRM was published, the Department received a number of preliminary comments from handicapped individuals and from organizations representing handicapped individuals. The tone and nature of these comments indicated to the Department that some of the regulatory provisions of the NPRM were being misunderstood. As a result, the Department, on March 1, 1984, published a Supplementary Notice further explaining the NPRM and requesting comments on possible revisions to the original NPRM. 49 FR 7792.

By April 16, 1984, close of the comment period, the Department received 1,194 comments. Two hundred and six of these comments also addressed the supplemental notice. Over 90% of the comments that the Department received came from individuals (908), most frequently handicapped persons, and from organizations representing the interests of handicapped persons (180). The Department received comments from all fifty states, the District of Columbia, Puerto Rico, Canada, and Denmark. Most of the comments that the Department received were general in nature. The Department received 721 comments based on a form letter. This form letter, written before issuance of the Supplemental Notice, expressed dismay at the inclusion of the regulation's ''undue financial and administrative burdens'' language, asserted that the Department was imposing a lesser requirement on the Federal government than on recipients of Federal assistance, and requested that the regulation be withdrawn. This form letter did not contain any substantive or detailed analysis. In fact, only 55 of the 1,194 comments contained specific, detailed analysis of the Department's proposal.

The Department read and analyzed each comment. Each comment was then subdivided according to one or more of over 90 issue categories. Because comments often addressed, even in general terms, more than one issue, the 1,194 comments were translated into 4,256 issue-specific comments. The decisions that the Department made in response to these comments, however, were not made on the basis of the number of commenters addressing any one point but on a thorough consideration of the merits of the points of view expressed in the comments. Copies of the written comments will remain available for public inspection in Room 854 of the HOLC Building, 320 First Street, NW., Washington, DC from 9:00 a.m. to 5:30 p.m., Monday through Friday, except for legal holidays, until November 13, 1984.

Section 504 requires that regulations that apply to the programs and activities of Federal executive agencies shall be submitted to the appropriate authorizing committees of Congress and that such regulations may take effect no earlier than the thirtieth day after they have been so submitted. The Department has today submitted this regulation to the Senate Committee on Labor and Human Resources and its Subcommittee on the Handicapped and the House Committee on Education and Labor and its Subcommittee on Select Education pursuant to the terms of section 504. The regulation will become effective on October 11, 1984.

This rule applies to all programs and activities conducted by the Department of Justice. Thus, this rule regulates the activities of over 30 separate subunits in the Department, including, for example, the Federal Bureau of Investigation, the Drug Enforcement Administration, the Immigration and Naturalization Service, the Bureau of Prisons, Federal Prison Industries, and the United States Attorneys.

BACKGROUND

The purpose of this rule is to provide for the enforcement of section 504 of the Rehabilitation Act of 1973, as amended (29 U.S.C. 794), as it applies to programs and activities conducted by the Department of Justice (DOJ). As amended by the Rehabilitation, Comprehensive Services, and Developmental Disabilities Amendments of 1978 (Sec. 119, Pub. L. 95–602, 92 Stat. 2982), section 504 of the Rehabilitation Act of 1973 states that:

No otherwise qualified handicapped individual in the United States, . . . shall, solely by reason of his handicap, be excluded from the participation in, be denied the benefits of, or be subjected to discrimination under any program or activity receiving Federal financial assistance *or under any program or activity conducted by any Executive agency or by the United States Postal Service. The head of each such agency shall promulgate such regulations as may be necessary to carry out the amendments to this section made by the Rehabilitation, Comprehensive Services, and Developmental Disabilities Act of 1978. Copies of any proposed regulation shall be submitted to appropriate authorizing committees of the Congress, and such regulation may take effect no earlier than the thirtieth day after the date on which such regulation is so submitted to such committees.*

(29 U.S.C. 794) (amendment italicized).

The substantive nondiscrimination obligations of the agency, as set forth in this rule, are identical, for the most part, to those established by Federal regulations for programs or activities receiving Federal financial assistance. *See* 28 CFR part 41 (section 504 coordination regulation for federally assisted programs). This general parallelism is in accord with the intent expressed by supporters of the 1978 amendment in floor debate, including its sponsor, Rep. James M. Jeffords, that the Federal government should have the same section 504 obligations as recipients of Federal financial assistance. 124 Cong. Rec. 13,901 (1978) (remarks of Rep. Jeffords); 124 Cong. Rec. E2668, E2670 (daily ed. May 17, 1984) *id.*, 124 Cong. Rec. 13,897 (remarks of Rep. Brademas); *id.* at 38,552 (remarks of Rep. Sarasin).

Nine hundred and two comments that the Department received agreed that the obligations of section 504 for federally conducted programs should be identical to those developed by the Federal agencies over the past seven years for federally assisted programs. These commenters, however, objected to any language differences between the Department's proposed rule for federally conducted programs and the Department's section 504 coordination regulation for federally assisted programs (28 CFR part 41). The commenters asserted that a number of language differences that the Department had proposed created less stringent standards for the Federal government than those applied to recipients of Federal assistance under section 504. They wrote that such a result could not be justified by Executive Order 12250, by the wording of the statute itself, nor by the legislative history of the 1978 amendments.

The commenters appear to have misunderstood the basis for inclusion of the new language in the DOJ regulation. The changes in this regulation are based on the Supreme Court's decision in *Southeastern Community College* v. *Davis*, 442 U.S. 397 (1979), and the subsequent circuit court decisions interpreting *Davis* and section 504. *See Dopico* v. *Goldschmidt*, 687 F.2d 644 (2d Cir. 1982); *American Public Transit Association* v. *Lewis*, 655 F.2d 1272 (D.C. Cir. 1981) (*APTA*); *see also Rhode Island Handicapped Action Committee* v. *Rhode Island Public Transit Authority*, 718 F.2d 490 (1st Cir. 1983).

Some commenters questioned the use of *Davis* as justification for the inclusion of the new provisions in the federally conducted regulation. They noted that the Department had not included these changes when, subsequent to the *Davis* decision, it issued a regulation implementing section 504 in programs receiving Federal financial assistance from this Department. The Department's section 504 federally assisted regulation, however, was issued prior to the D.C. circuit's decision in *APTA*. In *APTA*, the Department had argued a position similar to that advocated by the commenters. Judge Abner Mikva's decision in *APTA* clearly rejected the Department's position in that case. Other circuit court decisions followed the *APTA* interpretation of *Davis*. Since these decisions, the Department has interpreted its section 504 regulation for federally assisted programs in a manner consistent with the language of this final rule. The Department believes that judicial interpretation of section 504 compels it to incorporate the new language in the federally conducted regulation.

Incorporation of these changes, therefore, makes this section 504 federally conducted regulation consistent with the Federal government's section 504 federally assisted regulations. Because many of these federally assisted regulations were issued prior to the judicial interpretations of *Davis* and its progeny, their language does not reflect the interpretation of section 504 provided by the Supreme Court and by the various circuit courts. Of course, these federally assisted regulations must be interpreted to reflect the holdings of the Federal judiciary. Hence the Department believes that there are no significant differences between this final rule for federally conducted programs and the Federal government's interpretation of section 504 regulations for federally assisted programs.

This regulation has been reviewed by the Equal Employment Opportunity Commission under Executive Order 12067 (43 FR 28967, 3 CFR, 1978 Comp., p. 206). It is not a major rule within the meaning of Executive Order 12291 (46 FR 13193, 3 CFR, 1981 Comp., p. 127) and, therefore, a regulatory impact analysis has not been prepared. This regulation does not have an impact on small entities. It is not, therefore, subject to the Regulatory Flexibility Act (5 U.S.C. 601–612).

SECTION-BY-SECTION ANALYSIS AND RESPONSE TO COMMENTS

Section 39.101 Purpose

Section 39.101 states the purpose of the rule, which is to effectuate section 119 of the Rehabilitation, Comprehensive Services, and Developmental Disabilities Amendments of 1978, which amended section 504 of the Rehabilitation Act of 1973 to prohibit discrimination on the basis of handicap in programs or activities conducted by Executive agencies or the United States Postal Service.

The Department received no comments on this section and it remains unchanged from the Department's proposed rule.

Section 39.102 Application

The regulation applies to all programs or activities conducted by the Department of Justice. Under this section, a federally conducted program or activity is, in simple terms, anything a Federal agency does. Aside from employment, there are two major categories of federally conducted programs or activities covered by this regulation: those involving general public contact as part of ongoing agency operations and those directly administered by the Department for program beneficiaries and participants. Activities in the first part include communication with the public (telephone contacts, office walk-ins, or interviews) and the public's use of the Department's facilities (cafeteria, library). Activities in the second category include programs that provide Federal services or benefits (immigration activities, operation of the Federal prison system). No comments were received on this section.

Section 39.103 Definitions

The Department received 469 comments on the definitions section. Most of the comment, however, concentrated on the definition of ''qualified handicapped person.''

''Agency'' is defined as the Department of Justice.

''Assistant Attorney General.'' ''Assistant Attorney General'' refers to the Assistant Attorney General, Civil Rights Division, United States Department of Justice.

''Auxiliary aids.'' ''Auxiliary aids'' means services or devices that enable persons with impaired sensory, manual, or speaking skills to have an equal opportunity to participate in and enjoy the benefits of the agency's programs or activities. The definition provides examples of commonly used auxiliary aids. Auxiliary aids are addressed in §39.160(a)(1). Comments on the definition of ''auxiliary aids'' are discussed in connection with that section.

''Complete complaint.'' ''Complete complaint'' is defined to include all the information necessary to enable the agency to investigate the complaint. The definition is necessary, because the 180 day period for the agency's investigation (*see* §39.170(g)) begins when it receives a complete complaint.

''Facility.'' The definition of ''facility'' is similar to that in the section 504 coordination regulation for federally assisted programs, 28 CFR 41.3(f), except that the term ''rolling stock or other conveyances'' has been added and the phrase ''or interest in such property'' has been deleted.

Twenty commenters on the NPRM objected to the omission of the phrase ''or interest in such property'' from the definition of ''facility.'' As explained in the Supplemental Notice, the term ''facility,'' as used in this regulation, refers to structures, and does not include intangible property rights. The definition, therefore, has no effect on the scope of coverage of programs, including those conducted in facilities not included in the definition. The phrase has been omitted because the requirement that facilities be accessible would be a logical absurdity if applied to a lease, life estate, mortgage, or other intangible property interest. The regulation applies to all programs and activities conducted by the agency regardless of whether the facility in which they are conducted is owned, leased, or used on some other basis by the agency. Sixty commenters supported the clarification of this issue in the Supplemental Notice.

''Handicapped person.'' The definition of ''handicapped person'' has been revised to make it identical to the definition appearing in the section 504 coordination regulation for federally assisted programs (28 CFR 41.31). In its NPRM, the Department omitted the list of physical or mental impairments included in the definition of ''handicapped persons.'' The Department received 19 negative comments on this omission, and, in the Supplemental Notice, requested comments on whether it should be re-inserted. On the basis of the comments received, we have included the list in the final rule.

''Qualified handicapped person'' The definition of ''qualified handicapped person'' is a revised version of the definition appearing in the section 504 coordination regulation for federally assisted programs (28 CFR 41.32).

Subparagraph (1) of the definition states that a ''qualified handicapped person'' with regard to any program under which a person is required to perform services or to achieve a level of accomplishment is a handicapped person who can achieve the purpose of the program without modifications in the program that the agency can demonstrate would result in a fundamental alteration in its nature. This definition is based on the Supreme Court's *Davis* decision.

In *Davis,* the Court ruled that a hearing-impaired applicant to a nursing school was not a ''qualified handicapped person'' because her hearing impairment would prevent her from participating in the clinical training portion of the program. The Court found that, if the program were modified so as to enable the respondent to participate (by exempting her from the clinical training requirements), ''she would not receive even a rough equivalent of the training a nursing program normally gives.'' 442 U.S. at 410. It also found that ''the purpose of [the] program was to train persons who could serve the nursing profession in all customary ways,'' *id.* at 413, and that the respondent would be unable, because of her hearing impairment, to perform some functions expected of a registered nurse. It therefore concluded that the school was not required by section 504 to make such modifications that would result in ''a fundamental alteration in the nature of the program.'' *Id.* at 410.

The Department incorporated the Court's language in the definition of ''qualified handicapped person'' in order to make clear that such a person must be able to participate in the program offered by the agency. The agency is required to make modifications in order to enable a handicapped applicant to participate, but is not required to offer a program of a fundamentally different nature. The test is whether, with appropriate modifications, the applicant can achieve the purpose of the program offered; not whether the applicant could benefit or obtain results from some other program that the agency does not offer. Although the revised definition allows exclusion of some handicapped people from some programs, it requires that a handicapped person who is capable of achieving the purpose of the program must be accommodated, provided that the modifications do not fundamentally alter the nature of the program.

Two hundred and forty-four commenters objected to this revised definition for a variety of reasons. Several commenters stated that the Department incorrectly used *Davis* as the justification for explaining the differences between the federally assisted and the federally conducted regulations because the Supreme Court upheld the validity of the existing regulations in *Consolidated Rail Corp.* v. *Darrone,* 104 S. Ct. 1248 (1984). This view misunderstands the Court's actions in *Darrone.* In that case the Court ruled on a series of issues, the most important of which was under what circumstances section 504 applied to employment discrimination by recipients. The Court did not concern itself either directly or indirectly with the definition of ''qualified handicapped person'' or whether section 504 included limitations based on ''undue financial and administrative burdens.''

Many commenters stated that the proposal would change the definition of qualified handicapped person for employment. ''Qualified handicapped person'' is defined for purposes of employment in 29 CFR 1613.702(f), which is made applicable to this part by § 39.140. Nothing in this part changes existing regulations applicable to employment.

Many commenters assumed that the definition would have the effect of placing on the handicapped person the burden of proving that he or she is qualified. The definition has been revised to make it clear that the agency has the burden of demonstrating that a proposed modification would constitute a fundamental alteration in the nature of its program or activity. Furthermore, in demonstrating that a modification would result in such an alteration, the agency must follow the procedures established in §§ 39.150(a)(2) and 39.160(d), which are discussed below, for demonstrating that an action would result in undue financial and administrative burdens. That is, the decision must be made by the agency head or his or her designee in writing after consideration of all resources available for the program or activity and must be accompanied by an explanation of the reasons for the decision. If the agency head determines that an action would result in a fundamental alteration, the agency must consider options that would enable the handicapped person to achieve the purpose of the program but would not result in such an alteration.

Some commenters said that the definition of ''qualified handicapped person'' places handicapped persons in a ''Catch-22'' situation: because only qualified handicapped persons are protected by the statute, a determination that a person is not qualified would make enforcement remedies unavailable to that person. This concern is misplaced. If the Department determined that a handicapped person was not ''qualified,'' the person could use the procedures established by § 39.170 to challenge that determination, just as he or she could challenge any other decision by the agency that he or she believed to be discriminatory.

Many commenters argued that the definition of ''qualified handicapped person'' confused what should be two separate inquiries: whether a person meets essential eligibility

requirements and, if so, whether accommodation is required. They argued that the reference to ''fundamental alteration'' in the definition focuses attention on accommodations rather than on a handicapped person's abilities. As another commenter noted, however, the Supreme Court in *Davis* developed the ''fundamental alteration'' language in a decision that was determining the nature and scope of what constitutes a qualified handicapped person. The Department continues to believe that the concept of ''qualified handicapped person'' properly encompasses both the notion of ''essential eligibility requirements'' and the notion of program modifications that might fundamentally alter a program.

Some commenters argued that our analysis of *Davis* was inappropriate because *Davis* was decided on the basis of individual facts unique to that case or because *Davis* involved federally assisted and not federally conducted programs. While cases are decided on the basis of specific factual situations, courts, especially the Supreme Court, develop general principles of law for use in analyzing facts. The *Davis* decision was the Supreme Court's first comprehensive view of section 504, a major new civil rights statute. The *Davis* holding, that a person who cannot achieve the purpose of a program without fundamental changes in its nature is not a ''qualified handicapped person,'' is a general principle, a statement by the Court on how it views section 504. It is therefore necessary to reflect it in the Department's regulation.

Subparagraph (2) of the definition adopts the existing definition in the coordination regulation of ''qualified handicapped person'' with respect to services for programs receiving Federal financial assistance (28 CFR 41.32(b)). Under this part of the definition, a qualified handicapped person is a handicapped person who meets the essential eligibility requirements for participation in the program or activity.

''Section 504.'' This definition makes clear that, as used in this regulation, ''section 504'' applies only to programs or activities conducted by the agency and not to programs or activities to which it provides Federal financial assistance.

Section 39.110 Self-evaluation

This section requires that the agency conduct a self-evaluation of its compliance with section 504 within one year of the effective date of this regulation. The self-evaluation requirement is present in the existing section 504 coordination regulation for programs or activities receiving Federal financial assistance (28 CFR 41.5(b)(2)). Experience has demonstrated the self-evaluation process to be a valuable means of establishing a working relationship with handicapped persons that promotes both effective and efficient implementation of section 504.

In response to preliminary comments that the proposed rule had no specific criteria for conducting a self-evaluation, we requested comment on a proposed alternative in our Supplemental Notice (49 FR 7792). We received 64 comments, 57 of which were positive. The comments generally favored adoption of the alternative section, instead of the proposed section. We agree.

With respect to the applicability of the Federal Advisory Committee Act (5 U.S.C. App. 1 et seq.) (FACA), several comments were received. They argued that the FACA is not intended to apply to meetings with a self-evaluation group comprised of private individuals because they are rather unstructured, ad hoc meetings.

Authority for interpreting FACA was delegated to the General Services Administration (GSA) by Executive Order 12024 in 1977. Regulations issued by GSA place specific limitations on the scope of the Act by delineating examples of meetings or groups *not* covered. 41 CFR part 101–6. GSA identified a major issue in the promulgation of the regulations to be the extent of applicability of the Act

Some commenters believe, as a matter of general policy, that advisory groups which are not formally structured, which do not have a continuing existence, which meet to deal with specific issues, and whose meetings do not constitute an established pattern of conduct should not be covered under the Act. * * * This rule reflects our judgment that the exclusion of certain non-recurring meetings from the Act's coverage is fully consistent with the statute, its legislative history, and judicial interpretation. * * * The interim rule provides guidance for those meetings between Federal officials and non-Federal individuals which do not fall within the scope of the Act, and for which a charter and consultation with GSA is not required.

48 FR 19324 (Preamble to interim rules).

The regulations define ''advisory committee'' in pertinent part as:

Any committee, board, commission, council, conference, panel, task force or other similar group * * * established by * * * or *utilized by* * * * any agency official *for the purpose of obtaining advice or recommendations on issues or policy* which are within the scope of his or her responsibilities.

41 CFR 101–6. 1003 (emphasis added).

In turn, ''utilized'' is defined in pertinent part as a

group * * * which * * * agency official(s) *adopts*, such as through institutional arrangements, *as a preferred source from which*

to obtain advice or recommendations on a specific issue or policy within the scope of his or her responsibilities *in the same manner* as that *individual would obtain advice or recommendations from an established advisory committee.*

41 CFR 101–6.1003 (emphasis added).

The GSA regulation further provides that the Act does not apply to

(g) Any meeting initiated by the President or one or more Federal official [sic] for the purpose of obtaining advice or recommendations from one individual;

(h) Except with respect to established advisory committees:

(1) Any meeting with a group initiated by the President or one or more Federal official(s) for the purpose of exchanging facts or information; or

(2) Any meeting initiated by a group with the President or one or more Federal official(s) for the purpose of expressing the group's view, provided that the President or Federal official(s) does not use the group as a preferred source of advice or recommendations;

* * * * *

(j) Any meeting initiated by a Federal official(s) with more than one individual for the purpose of obtaining the advice of individual attendees and not for the purpose of utilizing the group to obtain consensus advice or recommendations.

41 CFR 101–6.1004 (g), (h), and (j).

This final rule provides that the agency shall provide an opportunity for interested persons, including handicapped persons or organizations representing handicapped persons, to participate in the self-evaluation process and development of transition plans by submitting comments (both oral and written).

Section 39.111 Notice

The Department received negative comments on its omission of a paragraph routinely used in section 504 regulations for federally assisted programs requiring recipients to inform interested persons of their rights under section 504. In the Department's Supplemental Notice, we requested comments on inclusion of specific regulatory language. Fifty-four positive comments were received. As a result, the Department has incorporated that new provision on notice into the final rule. It appears as §39.111.

Section 39.111 requires the agency to disseminate sufficient information to employees, applicants, participants, beneficiaries, and other interested persons to apprise them of rights and protections afforded by section 504 of this regulation. Methods of providing this information include, for example, the publication of information in handbooks, manuals, and pamphlets that are distributed to the public to describe the agency's programs and activities; the display of informative posters in service centers and other public places; or the broadcast of information by television or radio.

Section 39.111 is, in fact, a broader and more detailed version of the proposed rule's requirement (at §39.160(d)) that the agency provide handicapped persons with information concerning their rights. Because §39.111 encompasses the requirements of proposed §39.160(d), that latter paragraph has been deleted as duplicative.

Section 39.130 General prohibitions against discrimination

Section 39.130 is an adaptation of the corresponding section of the section 504 coordination regulation for programs or activities receiving Federal financial assistance (28 CFR 41.51). This regulatory provision attracted relatively few public comments and has not been changed from the proposed rule.

Paragraph (a) restates the nondiscrimination mandate of section 504. The remaining paragraphs in §39.130 establish the general principles for analyzing whether any particular action of the agency violates this mandate. These principles serve as the analytical foundation for the remaining sections of the regulation. If the agency violates a provision in any of the subsequent sections, it will also violate one of the general prohibitions found in §39.130. When there is no applicable subsequent provision, the general prohibitions stated in this section apply.

Paragraph (b) prohibits overt denials of equal treatment of handicapped persons. The agency may not refuse to provide a handicapped person with an equal opportunity to participate in or benefit from its program simply because the person is handicapped. Such blatantly exclusionary practices often result from the use of irrebuttable presumptions that absolutely exclude certain classes of disabled persons (*e.g.*, epileptics, hearing-impaired persons, persons with heart ailments) from participation in programs or activities without regard to an individual's actual ability to participate. Use of an irrebuttable presumption is permissible only when in all cases a physical condition by its very nature would prevent an individual from meeting the essential eligiblity requirements for participation in the activity in question. It would be permissible, therefore, to exclude without an individual evaluation all persons who are blind in both eyes from eligibility for a license to operate a commercial vehicle in interstate commerce; but it may not be permissible to disqualify automatically all those who are blind in just one eye.

In addition, section 504 prohibits more than just the most obvious denials of equal treatment. It is not enough to admit persons in wheelchairs to a program if the facilities in which the program is conducted are inaccessible. Subparagraph (b)(1)(iii), therefore, requires that the opportunity to participate or benefit afforded to a handicapped person be as effective as that afforded to others. The later sections on program accessibility (§§ 39.149–39.151) and communications (§ 39.160) are specific applications of this principle.

Despite the mandate of paragraph (d) that the agency administer its programs and activities in the most integrated setting appropriate to the needs of qualified handicapped persons, subparagraph (b)(1)(iv), in conjunction with paragraph (d), permits the agency to develop separate or different aids, benefits, or services when necessary to provide handicapped persons with an equal opportunity to participate in or benefit from the agency's programs or activities. Subparagraph (b)(1)(iv) requires that different or separate aids, benefits, or services be provided only when necessary to ensure that the aids, benefits, or services are as effective as those provided to others. Even when separate or different aids, benefits, or services would be more effective, subparagraph (b)(2) provides that a qualified handicapped person still has the right to choose to participate in the program that is not designed to accommodate handicapped persons.

Subparagraph (b)(1)(v) prohibits the agency from denying a qualified handicapped person the opportunity to participate as a member of a planning or advisory board.

Subparagraph (b)(1)(vi) prohibits the agency from limiting a qualified handicapped person in the enjoyment of any right, privilege, advantage, or opportunity enjoyed by others receiving any aid, benefit, or service.

Subparagraph (b)(3) prohibits the agency from utilizing criteria or methods of administration that deny handicapped persons access to the agency's programs or activities. The phrase ''criteria or methods of administration'' refers to official written agency policies and to the actual practices of the agency. This subparagraph prohibits both blatantly exclusionary policies or practices and nonessential policies and practices that are neutral on their face, but deny handicapped persons an effective opportunity to participate.

Subparagraph (b)(4) specifically applies the prohibition enunciated in § 39.130(b)(3) to the process of selecting sites for construction of new facilities or existing facilities to be used by the agency. Subparagraph (b)(4) does not apply to construction of additional buildings at an existing site.

Subparagraph (b)(5) prohibits the agency, in the selection of procurement contractors, from using criteria that subject qualified handicapped persons to discrimination on the basis of handicap.

Subparagraph (b)(6) prohibits the agency from discriminating against qualified handicapped persons on the basis of handicap in the granting of licenses or certification. A person is a ''qualified handicapped person'' with respect to licensing or certification, if he or she can meet the essential eligibility requirements for receiving the license or certification (*see* § 39.103).

In addition, the agency may not establish requirements for the programs or activities of licensees or certified entities that subject qualified handicapped persons to discrimination on the basis of handicap. For example, the agency must comply with this requirement when establishing safety standards for the operations of licensees. In that case the agency must ensure that standards that it promulgates do not discriminate in an impermissible manner against the employment of qualified handicapped persons.

Subparagraph (b)(6) does not extend section 504 directly to the programs or activities of licensees or certified entities themselves. The programs or activities of Federal licensees or certified entities are not themselves federally conducted programs or activities nor are they programs or activities receiving Federal financial assistance merely by virtue of the Federal license or certificate. However, as noted above, section 504 may affect the content of the rules established by the agency for the operation of the program or activity of the licensee or certified entity, and thereby indirectly affect limited aspects of its operations.

Twenty-three commenters argued that the regulation should extend to the activities of licensees or certified entities, citing *Community Television of Southern California* v. *Gottfried,* 103 S. Ct. 885 (1983). In that case, the Court held that section 504 as applied to federally assisted programs did not require the Federal Communications Commission to prohibit discrimination on the basis of handicap by licensed broadcasters, but that ''the policies underlying the Communications Act'' might authorize the Commission to issue a regulation governing such discrimination. The Court did not, however, indicate that section 504 itself could serve as the source of such regulatory authority.

The Court has held that ''the use of the words 'public interest' in a regulatory statute is not a broad license to promote the general public welfare. Rather the words take meaning from the purposes of the regulatory legislation.'' *National Association for the Advancement of Colored People* v. *Federal Power Commission,* 425 U.S. 662, 669 (1976). In our view, section 504 does not of itself extend an agency's regulatory authority to the activities of licensees or certified entities.

Where an agency has existing regulatory authority that is broad enough to enable it to establish a nondiscrimination requirement for its licensees or certified entities, section 504 may support the exercise of that authority. Because the Department of Justice has no such underlying authority, it cannot prohibit discrimination by licensees.

Twenty-two commenters objected to the omission of a paragraph from the regulations for federally assisted programs that prohibits a recipient from providing significant assistance to an organization that discriminates. To the extent that assistance from the agency would provide significant support to an organization, it would constitute Federal financial assistance and the organization, as a recipient of such assistance, would be covered by the agency's section 504 regulation for federally assisted programs. The regulatory ''significant assistance'' provision, however, would be inappropriate in a regulation applying only to federally conducted programs or activities.

Paragraph (c) provides that programs conducted pursuant to Federal statute or Executive order that are designed to benefit only handicapped persons or a given class of handicapped persons may be limited to those handicapped persons.

Paragraph (d), discussed above, provides that the agency must administer programs and activities in the most integrated setting appropriate to the needs of qualified handicapped persons.

Section 39.140 Employment

Section 39.140 prohibits discrimination on the basis of handicap in employment by the agency. Comments on proposed §39.140 identified two types of problems. First, several commenters felt that the rule's treatment of employment was not sufficiently comprehensive. They pointed out that the rule does not enumerate the employment practices covered (*e.g.*, hiring, promotion, assignment); it does not say what must be done to avoid or correct possible discrimination (*e.g.*, reasonable accommodation, review of preemployment tests, limitations on preemployment inquiries and the use of medical examinations); nor does it define a ''qualified handicapped person'' with respect to employment.

Second, one commenter objected to the rule's adoption of ''the definitions, requirements and procedures of section 501 of the Rehabilitation Act'' as established in rules of the Equal Employment Opportunity Commission (EEOC) at 29 CFR part 1613. This commenter argued that EEOC's rules on physical examinations were too restrictive and claimed that the proposed rule did not limit employment coverage to the program conducted by the Federal government in a manner similar to the ''program or activity'' limitation on coverage of programs receiving Federal financial assistance. Finally, the commenter asserted that reliance on section 501 was misplaced because that section of the Rehabilitation Act requires affirmative action whereas section 504, which the rule implements, contains only a nondiscrimination requirement.

The original notice of proposed rulemaking explained that the regulation is in accord with *Prewitt* v. *United States Postal Service,* 662 F.2d 292 (5th Cir. 1981), which held that Congress intended section 504 to cover the employment practices of Executive agencies. In *Prewitt,* the court also held that, in order to give effect to sections 501 and 504, both of which cover Federal employment, the administrative procedures of section 501 must be followed. Accordingly, the proposed rule adopted the definitions, requirements and procedures of section 501 as established in EEOC's rules.

The final rule has not been changed. The Department intends to avoid duplicative, competing or conflicting standards under the Rehabilitation Act with respect to Federal employment. While the rule could define terms with respect to employment and enumerate what practices are covered and what requirements apply, reference to the Government-wide rules of the Equal Employment Opportunity Commission is sufficient and avoids duplication. The class of Federal employees and applicants for employment covered by section 504 is identical to or subsumed within that covered by section 501. To apply different or lesser standards to persons alleging violations of section 504 could lead unnecessarily to confusion in the enforcement of the Rehabilitation Act with respect to Federal employment.

Section 39.149 Program accessibility: Discrimination prohibited

The proposed regulation did not contain a general statement of the program accessibility requirement similar to that appearing in the section 504 coordination regulation for federally assisted programs (28 CFR 41.56). The decision not to include this language in the proposed regulation created the misperception that a change in substance was intended. In order to remedy this misunderstanding, the Supplemental Notice requested comments on explicitly including it. Sixty-two commenters favored inclusion of the specific regulatory language that was published in the Supplemental Notice. Consequently, the final rule has been revised to include the language of the Supplemental Notice. The language appears at §39.149.

Section 39.150 Program accessibility: Existing facilities

This regulation adopts the program accessibility concept found in the existing section 504 coordination regulation for programs or activities receiving Federal financial assistance (28 CFR 41.57), with certain modifications. Thus, §39.150 requires that the agency's program or activity, when viewed in its entirety, be readily accessible to and usable by handicapped persons. The regulation also makes clear that the agency is not required to make each of its existing facilities accessible (§39.150(a)(1)). However, §39.150, unlike 28 CFR 41.56–41.57, places explicit limits on the agency's obligation to ensure program accessibility (§39.150(a)(2)). This provision provoked 959 comments, the largest number received on any single issue. Most commenters sought the deletion of the ''undue financial and administrative burdens'' language from the regulation. On the basis of preliminary comments on this paragraph, the Department published clarifying language in its Supplemental Notice. The final version includes that clarification.

The ''undue financial and administrative burdens'' language (found at §§39.150(a)(2) and 39.160(d)) is based on the Supreme Court's *Davis* holding that section 504 does not require program modifications that result in a fundamental alteration in the nature of a program, and on the Court's statement that section 504 does not require modifications that would result in ''undue financial and administrative burdens.'' 442 U.S. at 412. Since *Davis*, circuit courts have applied this limitation on a showing that only one of the two ''undue burdens'' would be created as a result of the modification sought to be imposed under section 504. *See, e.g., Dopico* v. *Goldschmidt, supra; American Public Transit Association* v. *Lewis, supra* (*APTA*). In *APTA* the United States Court of Appeals for the District of Columbia Circuit applied the *Davis* language and invalidated the section 504 regulations of the Department of Transportation (DOT). The court in *APTA* noted ''that at some point a transit system's refusal to take modest, affirmative steps to accommodate handicapped persons might well violate section 504. But DOT's rules do not mandate only modest expenditures. The regulations require extensive modifications of existing systems and impose extremely heavy financial burdens on local transit authorities.'' 655 F.2d at 1278.

The inclusion of subparagraph (a)(2) is an effort to conform the agency's regulation implementing section 504 to the Supreme Court's interpretation of the statute in *Davis* as well as to the decisions of lower courts following the *Davis* opinion. This subparagraph acknowledges, in light of recent case law, that, in some situations, certain accommodations for a handicapped person may so alter an agency's program or activity, or entail such extensive costs and administrative burdens that the refusal to undertake the accommodations is not discriminatory. The failure to include such a provision could lead to judicial invalidation of the regulation or reversal of a particular enforcement action taken pursuant to the regulation.

Many commenters argued that the Supreme Court's decision in *Davis* did not require inclusion of an undue burdens defense in this regulation. These commenters asserted that the holding in *Davis* was that the plaintiff was not a qualified handicapped person and that the subsequent reference to ''undue financial and administrative burdens'' was mere *dicta*. These commenters overlook the interpretations of *Davis* provided by the Federal circuit court cases mentioned above. The *APTA* and *Dopico* decisions make it clear that financial burdens can limit the obligation to comply with section 504. *See also New Mexico Association for Retarded Citizens* v. *New Mexico*, 678 F.2d 847 (10th Cir. 1982).

Many commenters argued that inclusion of the undue burdens defense was inconsistent with the position taken by Vice President Bush in his letter of March 21, 1983, in which he announced the Administration's decision not to revise the coordination regulation for federally assisted programs. The decision to include the undue burdens defense represents no contradiction with the position taken by Vice President Bush on the guidelines for federally assisted programs. In his letter the Vice President stated that ''extensive change of the existing 504 coordination regulations was not required, and that with respect to those few areas where clarification might be desirable, the courts are currently providing useful guidance and can be expected to continue to do so in the future.'' One element of that ''useful guidance'' obviously comes from interpretations of the *Davis* decision by the lower Federal courts.

The Department has carefully considered the comments on the process that the Department should follow in determining whether a program modification would result in undue financial and administrative burdens. The Department intends to be guided by six principles in its application of the ''fundamental alteration'' and ''undue financial and administrative burdens'' language.

First, because of the extensive resources and capabilities that could properly be drawn upon for section 504 purposes by a large Federal agency like the Department of Justice, the Department explicitly acknowledges that, in most cases, making a Department program accessible will likely not result in undue burdens. Second, the burden of proving that the accommodation request will result in a fundamental alteration or undue burdens has been placed squarely on the Department of Justice, not on the handicapped

person. Third, in determining whether financial and administrative burdens are undue, the Department is to consider all Department resources available for use in the funding and operation of the conducted program. Fourth, the ''fundamental alteration''/''undue burdens'' decision is to be made by the Attorney General or his designee and must be accompanied by a written statement of reasons for reaching such a conclusion. Fifth, if a disabled person disagrees with the Attorney General's finding, he or she can file a complaint under the complaint procedures established by the final regulation. A significant feature of this complaint adjudication procedure is the availability of a hearing before an independent administrative law judge under the due process protections of the Administrative Procedure Act. Sixth and finally, even if there is a determination that making a program accessible will fundamentally alter the nature of the program, or will result in undue financial and administrative burdens, the Department must still take action, short of that outer limit, that will open participation in the Department's program to disabled persons to the fullest extent possible.

One hundred and eighty-one commenters on the Supplemental Notice objected to the provision that the ''undue burdens'' decision would be based on consideration of ''all agency resources available for use in the funding and operation of the conducted program,'' arguing that it should be based on the resources of the agency as a whole. Some argued that this formulation was required because all agency resources come from taxpayer monies and should not be used to support discrimination.

The Department's entire budget is an inappropriate touchstone for making determinations as to undue financial and administrative burdens. Many parts of the Department's budget are earmarked for specific purposes and are simply not available for use in making the Department's programs accessible to disabled persons. For example, funds for the operation of the Bureau of Prisons are unavailable for defraying the cost of a sign language interpreter at a deportation hearing conducted by the Immigration and Naturalization Service. There are extensive resources available to the Department and it is expected that the Department will, only on very rare occasions, be faced with ''undue burdens'' in meeting the program accessibility or communications sections of the regulation.

One commenter said that the term ''undue hardship'' used in regulations for federally assisted programs is more specific and less discriminatory than the term ''undue burdens.'' The term ''undue hardship'' is a term of art used in connection with employment. The term ''undue burdens'' is taken from the Supreme Court's opinion in *Davis* and is appropriately included in this regulation.

Some commenters argued that section 504 creates an absolute right to access, and that cost cannot limit this right, although it may be a factor in determining timeframes for compliance. Section 504 does not create an absolute right to access. The Supreme Court stated in *Davis* that recipients need not undertake modifications to their programs to meet the requirements of section 504 that would result in ''undue financial and administrative burdens.'' This understanding of section 504 and its implementing regulations for federally assisted programs is shared by the lower Federal courts, which have routinely applied the ''undue burdens'' limitation to accessibility issues. Congress suggested no different interpretation of section 504 when applying it to federally conducted programs. Spreading the cost of compliance over a period of time is, however, one way of avoiding undue financial and administrative burdens, and the Department will consider that as an option whenever it considers asserting that defense.

Paragraph (b) sets forth a number of means by which program accessibility may be achieved, including redesign of equipment, reassignment of services to accessible buildings, and provision of aides. In choosing among methods, the agency shall give priority consideration to those that will be consistent with provision of services in the most integrated setting appropriate to the needs of handicapped persons. Structural changes in existing facilities are required only when there is no other feasible way to make the agency's program accessible. The agency may comply with the program accessibility requirement by delivering services at alternate accessible sites or making home visits as appropriate.

Paragraphs (c) and (d) establish time periods for complying with the program accessibility requirement. As currently required for federally assisted programs by 28 CFR 41.57(b), the agency must make any necessary structural changes in facilities as soon as practicable, but in no event later than three years after the effective date of this regulation. Where structural modifications are required, a transition plan shall be developed within six months of the effective date of this regulation. Aside from structural changes, all other necessary steps to achieve compliance shall be taken within sixty days.

Section 39.151 Program accessibility: New construction and alterations

Overlapping coverage exists with respect to new construction under section 504, section 502 of the Rehabilitation Act of 1973, as

amended (29 U.S.C 792), and the Architectural Barriers Act of 1968, as amended (42 U.S.C. 4151–4157). Section 39.151 provides that those buildings that are constructed or altered by, on behalf of, or for the use of the agency shall be designed, constructed, or altered to be readily accessible to and usable by handicapped persons in accordance with 41 CFR 101–19.600 to 101–19.607. This standard was promulgated pursuant to the Architectural Barriers Act of 1968, as amended (42 U.S.C. 4151–4157). It is appropriate to adopt the existing Architectural Barriers Act standard for section 504 compliance because new and altered buildings subject to this regulation are also subject to the Architectural Barriers Act and because adoption of the standard will avoid duplicative and possibly inconsistent standards.

Existing buildings leased by the agency after the effective date of this regulation are not required to meet the new construction standard. They are subject, however, to the requirements of § 39.150.

A commenter has recommended that the regulation should require that buildings leased after the effective date of the regulation should meet the new construction standards of § 39.151, rather than the program accessibility standard for existing facilities in § 39.150. Federal practice under section 504 has always treated newly leased buildings as subject to the existing facility program accessibility standard. Unlike the construction of new buildings where architectural barriers can be avoided at little or no cost, the application of new construction standards to an existing building being leased raises the same prospect of retrofitting buildings as the use of an existing Federal facility, and the Department believes the same program accessibility standard should apply to both owned and leased existing buildings.

Section 39.160 Communications

Section 39.160 requires the agency to take appropriate steps to ensure effective communication with personnel of other Federal entities, applicants, participants, and members of the public. These steps include procedures for determining when auxiliary aids are necessary under § 39.160(a)(1) to afford a handicapped person an equal opportunity to participate in, and enjoy the benefits of, the agency's program or activity. They also include an opportunity for handicapped persons to request the auxiliary aids of their choice. This expressed choice shall be given primary consideration by the agency (§ 39.160(a)(1)(i)). The agency shall honor the choice unless it can demonstrate that another effective means of communication exists or that use of the means chosen would not be required under § 39.160(d). That paragraph limits the obligation of the agency to ensure effective communication in accordance with *Davis* and the circuit court opinions interpreting it (*see supra* preamble § 39.150(a)(2)). Unless not required by § 39.160(d), the agency shall provide auxiliary aids at no cost to the handicapped person.

In some circumstances, a notepad and written materials may be sufficient to permit effective communication with a hearing-impaired person. In many circumstances, however, they may not be, particularly when the information being communicated is complex or exchanged for a lengthy period of time (*e.g.*, a meeting) or where the hearing-impaired applicant or participant is not skilled in spoken or written language. In these cases, a sign language interpreter may be appropriate. For vision-impaired persons, effective communication might be achieved by several means, including readers and audio recordings. In general, the agency intends to inform the public of (1) the communications services it offers to afford handicapped persons an equal opportunity to participate in or benefit from its programs or activities, (2) the opportunity to request a particular mode of communication, and (3) the agency's preferences regarding auxiliary aids when several different modes are effective.

The agency shall ensure effective communication with vision-impaired and hearing-impaired persons involved in hearings conducted by the agency, *e.g.*, INS deportation proceedings. Auxiliary aids in these proceedings must be afforded where they are necessary to ensure effective communication at the proceedings. When sign language interpreters are necessary, the agency may require that it be given reasonable notice prior to the proceeding of the need for an interpreter. Moreover, the agency need not provide individually prescribed devices, readers for personal use or study, or other devices of a personal nature (§ 39.160(a)(1)(ii)). For example, the agency need not provide eye glasses or hearing aids to applicants or participants in its programs. Similarly, the regulation does not require the agency to provide wheelchairs to persons with mobility impairments.

Some commenters suggested that the Department's language in § 39.160(a)(1)(ii) that states that the agency need not provide individually prescribed devices or readers for personal use or study be modified to state that such devices are not required for ''non-program material.'' This suggestion has not been adopted because it is less clear than the existing formulation, which is intended to distinguish between communications that are necessary to obtain the benefits of the federal programs and those that are not and which parallels the requirements of the Federal government's section 504 regulations for federally assisted programs. For example, a

federally operated library would have to ensure effective communication between its librarian and a patron, but not between the patron and a friend who had accompanied him or her to the library.

Several comments suggested that the definition of auxiliary aids should include attendant services that may be needed to aid disabled persons to travel to meetings. Other comments recommended that in some cases attendant services may be an appropriate auxiliary aid to achieve program accessiblity.

The Department has not adopted the approach recommended by these comments. To the extent that the services of an attendant are not directly related to a federally conducted program or activity, it would be inappropriate to require them at Federal expense. For example, the services of a sign language interpreter make a workshop as available to any deaf participant as it is to other participants. The need for services of interpreters arises directly out of the presentation of information in a form that can be understood by hearing persons. However, the Department views the services of an attendant for a disabled person as generally personal in nature and not directly related to the federally conducted program.

A different conclusion, however, might be reached for Federal employees or other persons traveling for the agency. Where a disabled person who is unable to travel without an attendant is required to perform official travel, the travel expenses of an attendant, including per diem and transportation expenses, may be paid by the Department. See 5 U.S.C. 3102(d) (1982).

Paragraph (b) requires the agency to provide information to handicapped persons concerning accessible services, activities, and facilities. Paragraph (c) requires the agency to provide signage at inaccessible facilities that directs users to locations with information about accessible facilities.

Section 39.170 Compliance procedures

Section 39.170 establishes a detailed complaint processing and review procedure for resolving allegations of discrimination in violation of section 504 in the Department of Justice's programs and activities. The 1978 amendments to section 504 failed to provide a specific statutory remedy for violations of section 504 in federally conducted programs. The amendment's legislative history suggesting parallelism between section 504 for federally conducted and federally assisted programs is unhelpful in this area because the fund termination mechanism used in section 504 federally assisted regulations depends on the legal relationship between a Federal funding agency and the recipients to which the Federal funding is extended. The Department has decided that the most effective and appropriate manner in which to enforce section 504 in the federally conducted area is through an equitable complaint resolution process. Section 39.170 establishes this process.

The complaint process in the final rule is substantially the same as the one that the Department proposed. The Department received 57 comments on this section. These comments did not question the use of a complaint-responsive enforcement scheme as appropriate for section 504 for federally conducted programs. The Department continues to view its specific proposal as satisfactory.

Paragraph (a) specifies that paragraphs (c) through (l) of this section establish the procedures for processing complaints other than employment complaints. Paragraph (b) provides that the agency will process employment complaints according to procedures established in existing regulations of the EEOC (29 CFR part 1613) pursuant to section 501 of the Rehabilitation Act of 1973 (29 U.S.C. 791).

Paragraph (c) vests in the Responsible Official the responsibility for the overall management of the 504 compliance program. ''Responsible Official'' or ''Official,'' as defined in §39.103, refers to the Director of Equal Employment Opportunity, who is designated as the official responsible for coordinating implementation of compliance procedures set forth in §39.170. The definition of ''Official'' includes other Department Officials to whom authority has been delegated by the Official. The Assistant Attorney General for Administration has been designated as the Director of Equal Employment Opportunity for the Department. *See* 28 CFR 42.2(a).

Although one person has responsibility both for administering the Equal Employment Opportunity Program for the Department and for coordinating implementation of the compliance procedures under this part, the procedures for carrying out these two responsibilities are different. The Official would follow the procedures for enforcing equal employment opportunity, as set forth in 29 CFR part 1613, only for complaints alleging employment discrimination (see §39.170(b)). Other complaints would be processed under the procedures in §39.170. Authority for processing complaints of employment discrimination has been delegated to Equal Employment Opportunity Officers in some Department components, and it is expected that authority for enforcing this part will be similarly delegated.

Subparagraphs (d) (1) and (3) provide that any person who believes that he or she has been discriminated against may file a complaint within 180 days from the date of the alleged discrimination. The Official may extend the time limit when the complainant shows good cause. Good cause could be found

if, for example, (1) the complainant mistakenly filed with the wrong agency and was not informed of the mistake within the 180 days; or (2) the complainant could not reasonably be expected to know of the act or event said to be discriminatory.

Several commenters argued that the proposed rule unnecessarily restricted the right to file a complaint by not allowing an individual victim of discrimination to authorize a representative to file on his or her behalf. The final rule permits filing by the authorized representative of an individual victim, or, in the case of class discrimination, of a member of the class, as well as by an individual victim or class member. The final rule has been revised to make it clear that complaints alleging that a specific class of persons has been discriminated against may only be filed by a member of that specific class or by a representative authorized to file the complaint by a member of that class (§39.170(d)(1)).

The Federal Bureau of Prisons has established an Administrative Remedy Procedure for handling grievances of inmates of Federal penal institutions (28 CFR part 542). This procedure allows an inmate to file a formal written complaint with the Warden of the Institution or with the Regional Director. While these remedies are not a substitute for the right to an independent investigation by a civil rights office and appeal to the Complaint Adjudication Officer, the final rule requires inmates to exhaust these procedural remedies before filing a complaint with the Official. The time period for filing a complaint with the Official would be extended by the time spent exhausting these remedies. This requirement applies only to inmates and does not extend to visitors and employees.

The Department received several comments on how prisoners' complaints should be handled. Some of them suggested that both the discrimination procedure and the prison grievance procedures should be invoked simultaneously. The Department believes that this proposal would require the unnecessary duplication of efforts without materially enhancing results. The Bureau of Prisons reported that thousands of inmate complaints were filed in 1983 alone and that several court decisions have held that the inmate administrative remedy procedure must be exhausted before suit can be filed. Although the volume of complaints by prison inmates might be burdensome, it is not possible now to forecast the number that will be filed. The Department believes, however, that handicapped prisoners must be afforded the right to have their complaints investigated by an office that specializes in discrimination complaints, including section 504 complaints, as well as the right to appeal to the Complaint Adjudication Officer. It is expected that the requirement that inmates first exhaust prison administrative remedies will be effective in resolving most meritorious complaints. It may be necessary, of course, for the Department to provide additional resources to handle complaints filed under the new regulation.

Subparagraph (d)(2) requires that the name and identity of a complainant be held in confidence unless he or she waives that right in writing and except to the extent necessary for compliance purposes.

Complaints may be mailed or delivered to the Attorney General, the Responsible Official, or other agency officials. Complaints received by any agency official other than the Responsible Official must be forwarded immediately to the Responsible Official (subparagraph (d)(4)).

Paragraph (e) requires the agency to send to the Architectural and Transportation Barriers Compliance Board a copy of any complaint alleging that a building or facility subject to the Architectural Barriers Act or section 502 was designed, constructed, or altered in a manner that does not provide ready access to and use by handicapped persons.

The Official is required to accept all complete complaints over which the agency has jurisdiction (§39.170(f)(1)). If the Official determines that the agency does not have jurisdiction over a complaint, the Official shall promptly notify the complainant and make reasonable efforts to refer the complaint to the appropriate entity of the Federal government (§39.170(f)(3)).

If a complaint is not complete when it is filed, the Official must notify the complainant within 30 days that additional information is needed. The complainant must furnish the necessary information within 30 days of receipt of the notice, or the complaint will be dismissed without prejudice. Filing an incomplete complaint within 180 days from the date of the alleged discrimination satisfies the requirement of subparagraph (d)(3), but the timeframes governing the Official's other obligations to process the complaint (*see, e.g.*, §39.170(g)(1), §39.170(h)) do not begin to operate until the Official receives a complete complaint.

Within 180 days of receipt of the complete complaint, the Official is to investigate the complaint, attempt an informal resolution, and, if informal resolution is not achieved, issue a letter of findings (§39.170(h)). Within the time limit, the Official should make every effort to achieve informal resolution whenever possible.

In response to a suggestion from a commenter, the Department no longer refers to the letter of findings as ''preliminary.'' The

word ''preliminary'' has been deleted because, if there is no appeal, the determination made in the letter of findings will constitute the final agency decision.

Paragraph (h) requires that the Official's letter be sent to the complainant and respondent, and that it contain findings of fact and conclusions of law, the relief granted if discrimination is found, and notice of the right to appeal. The regulation provides that a party may appeal the Official's letter or findings to the Complaint Adjudication Officer (CAO). If neither party files an appeal from the letter of findings within 30 days after receipt of the letter, the letter will constitute the final decision of the agency (§39.170(i)(4)).

The Department's final rule provides an opportunity for a hearing before an administrative law judge (ALJ). The ALJ would make a recommended decision to the CAO, who would make the final agency decision. The purpose of the hearing is to provide a forum in which the complainant or respondent can have an opportunity to be heard, confront witnesses, and present evidence so that an administrative law judge can issue a recommended decision that is well-reasoned and justified on the basis of the evidence presented.

The opportunity for a hearing before an ALJ assures more impartiality and the appearance of more impartiality than a decision made by one agency official concerning other officials of the same agency. The Department expects that agency decisions based on a hearing record would more likely survive later judicial review.

Under the regulation, another person or organization would be allowed to participate as a third party or amicus curiae if the ALJ determines that the petitioner has a legitimate interest in the proceedings, that participation will not duly delay the outcome, and that petitioner's participation may contribute materially to the disposition of the proceedings.

The Department received comments on the proposed opportunity for a hearing before an administrative law judge. Some commenters were primarily concerned that by invoking a hearing before the ALJ with the procedural safeguards adopted from the Administrative Procedure Act (APA) (5 U.S.C. 554–557), the complainant would lose the right to a *de novo* review of the agency's final decision, because the APA allows a Federal court only to determine if the agency's final decisions are ''arbitrary and capricious'' (5 U.S.C. 706(2)(A)). It is beyond our jurisdiction to specify that a *de novo* review is available to complaints seeking judicial review of final agency decisions. This issue is for the courts to decide. That is also true for the issue of the availability of a private right of action, either without invoking our compliance procedures or after the issuance of letters of findings.

Given the inherent conflicts of interest in situations where complaints allege discrimination on the part of the Department, it is critically important to ensure that a complaint be reviewed in a fair, independent process. The availability of a hearing before an independent ALJ would provide the appearance as well as the actuality of an impartial compliance mechanism. The Department has therefore included the provision for a hearing in the final regulation.

One comment requested the addition of a provision whereby the Department would award attorneys fees to complainants. Another comment suggested that the Equal Access to Justice Act (5 U.S.C. 504) might provide for the award of fees. Nothing contained in title V of the Rehabilitation Act provides for the agency award of attorneys fees in administrative proceedings other than those involving Federal employment. Nor does the EAJA and the Department's implementing regulations at 28 CFR part 24 provide for such awards in hearings conducted under §39.170(k). We have therefore included no attorneys fee provision in the current regulations.

Under paragraph (l), the CAO renders a final agency decision after appeal without a hearing or after a hearing. The CAO directs appropriate remedial action if discrimination is found. The CAO's decision will involve reviewing the entire file, including the investigation report, letter of findings, and, if a hearing was held, the hearing record and recommended decision of the administrative law judge. The decision shall be made within 60 days of receipt of the complaint file or the hearing record.

One commenter objected to the requirement in subparagraph (l)(1) that the CAO explain specifically a decision to reject or modify the ALJ's proposed findings, arguing that it would inappropriately limit the CAO's consideration of the issues. We have adopted the suggestion and eliminated the requirement.

In response to recommendations from the Department's CAO and the Drug Enforcement Administration's ALJ, some changes have been made in the compliance procedures. Among the changes are a new requirement that the ALJ provide findings to all parties, not just the CAO, an added provision for filing exceptions to an ALJ's recommended decision, a delineation of the authorities of the ALJ, and a clarification of the responsibility for supervising compliance with the final agency decision between the Responsible Official and the CAO.

The Department also received some comments on the appropriateness of providing for an appeal by either the complainant or

respondent. Some commenters objected to allowing a respondent to obtain an administrative appeal because it could delay remedying discrimination. On the other hand, an impartial adjudicatory mechanism would require that opportunity is provided for both sides to appeal. For this reason, the Department finds it necessary and appropriate for both complainant and respondent to have the right to an administrative appeal.

PART 40—STANDARDS FOR INMATE GRIEVANCE PROCEDURES

Subpart A—Minimum Standards for Inmate Grievance Procedures

Sec.
40.1 Definitions.
40.2 Adoption of procedures.
40.3 Communication of procedures.
40.4 Accessibility.
40.5 Applicability.
40.6 Remedies.
40.7 Operation and decision.
40.8 Emergency procedure.
40.9 Reprisals.
40.10 Records—nature; confidentiality.

Subpart B—Procedures for Obtaining Certification of a Grievance Procedure

40.11 Submissions by applicant.
40.12 Notice of intent to apply for certification.
40.13 Review by the Attorney General.
40.14 Conditional certification.
40.15 Full certification.
40.16 Denial of certification.
40.17 Reapplication after denial of certification.
40.18 Suspension of certification.
40.19 Withdrawal of certification.
40.20 Contemplated change in certified procedure.
40.21 Notification of court.
40.22 Significance of certification.

AUTHORITY: 42 U.S.C. 1997e.

SOURCE: Order No. 957–81, 46 FR 48186, Oct. 1, 1981, unless otherwise noted.

Subpart A—Minimum Standards for Inmate Grievance Procedures

§ 40.1 Definitions.

For the purposes of this part—

(a) *Act* means the Civil Rights of Institutionalized Persons Act, Public Law 96–247, 94 Stat. 349 (42 U.S.C. 1997).

(b) *Applicant* means a state or political subdivision of a state that submits to the Attorney General a request for certification of a grievance procedure.

(c) *Attorney General* means the Attorney General of the United States or the Attorney General's designees.

(d) *Grievance* means a written complaint by an inmate on the inmate's own behalf regarding a policy applicable within an institution, a condition in an institution, an action involving an inmate of an institution, or an incident occurring within an institution. The term ''grievance'' does not include a complaint relating to a parole decision.

(e) *Inmate* means an individual confined in an institution for adults, who has been convicted of a crime.

(f) *Institution* means a jail, prison, or other correctional facility, or pretrial detention facility that houses adult inmates and is owned, operated, or managed by or provides services on behalf of a State or political subdivision of a State.

(g) *State* means a State of the United States, the District of Columbia, the commonwealth of Puerto Rico, or any of the territories and possessions of the United States.

(h) *Substantial compliance* means that there is no omission of any essential part from compliance, that any omission consists only of an unimportant defect or omission, and that there has been a firm effort to comply fully with the standards.

§ 40.2 Adoption of procedures.

Each applicant seeking certification of its grievance procedure for purposes of the Act shall adopt a written grievance procedure. Inmates and employees shall be afforded an advisory role in the formulation and implementation of a grievance procedure adopted after the effective date of these regulations, and shall be afforded an advisory role in reviewing the compliance with the standards set forth herein of a grievance procedure adopted prior to the effective date of these regulations.

§ 40.3 Communication of procedures.

The written grievance procedure shall be readily available to all employees and inmates of the institution. Additionally, each inmate and employee shall, upon arrival at the institution, receive written notification and an oral explanation of the procedure,

including the opportunity to have questions regarding the procedure answered orally. The written procedure shall be available in any language spoken by a significant portion of the institution's population, and appropriate provisions shall be made for those not speaking those languages, as well as for the impaired and the handicapped.

§ 40.4 Accessibility.

Each inmate shall be entitled to invoke the grievance procedure regardless of any disciplinary, classification, or other administrative or legislative decision to which the inmate may be subject. The institution shall ensure that the procedure is accessible to impaired and handicapped inmates.

§ 40.5 Applicability.

The grievance procedure shall be applicable to a broad range of complaints and shall state specifically the types of complaints covered and excluded. At a minimum, the grievance procedure shall permit complaints by inmates regarding policies and conditions within the jurisdiction of the institution or the correctional agency that affect them personally, as well as actions by employees and inmates, and incidents occurring within the institution that affect them personally. The grievance procedure shall not be used as a disciplinary procedure.

§ 40.6 Remedies.

The grievance procedure shall afford a successful grievant a meaningful remedy. Although available remedies may vary among institutions, a reasonable range of meaningful remedies in each institution is necessary.

§ 40.7 Operation and decision.

(a) *Initiation*. The institution may require an inmate to attempt informal resolution before the inmate files a grievance under this procedure. The procedure for initiating a grievance shall be simple and include the use of a standard form. Necessary materials shall be freely available to all inmates and assistance shall be readily available for inmates who cannot complete the forms themselves. Forms shall not demand unnecessary technical compliance with formal structure or detail, but shall encourage a simple and straightforward statement of the inmate's grievance.

(b) *Inmate and employee participation*. The institution shall provide for an advisory role for employees and inmates in the operation of the grievance system. In-person hearings and committees consisting of either inmates or employees or both are not required by this paragraph, but they are permitted so long as no inmate participates in the resolution of any other inmate's grievance over the objection of the grievant.

(c) *Investigation and consideration*. No inmate or employee who appears to be involved in the matter shall participate in any capacity in the resolution of the grievance.

(d) *Reasoned, written responses*. Each grievance shall be answered in writing at each level of decision and review. The response shall state the reasons for the decision reached and shall include a statement that the inmate is entitled to further review, if such is available, and shall contain simple directions for obtaining such review.

(e) *Fixed time limits*. Responses shall be made within fixed time limits at each level of decision. Time limits may vary between institutions, but expeditious processing of grievances at each level of decision is essential to prevent grievance from becoming moot. Unless the grievant has been notified of an extension of time for a response, expiration of a time limit at any stage of the process shall entitle the grievant to move to the next stage of the process. In all instances grievances must be processed from initiation to final disposition within 180 days, inclusive of any extensions.

(f) *Review*. The grievant shall be entitled to review by a person or other entity, not under the institution's supervision or control, of the disposition of all grievances, including alleged reprisals by an employee against an inmate. A request for review shall be allowed automatically without interference by

administrators or employees of the institution and such review shall be conducted without influence or interference by administrators or employees of the institution.

[Order No. 957–81, 46 FR 48186, Oct. 1, 1981, as amended by Order No. 1618–92, 57 FR 38773, Aug. 27, 1992; Order No. 1955–95, 60 FR 13902, Mar. 15, 1995]

§ 40.8 Emergency procedure.

The grievance procedure shall contain special provision for responding to grievances of an emergency nature. Emergency grievances shall be defined, at a minimum, as matters regarding which disposition according to the regular time limits would subject the inmate to a substantial risk of personal injury, or cause other serious and irreparable harm to the inmate. Emergency grievances shall be forwarded immediately, without substantive review, to the level at which corrective action can be taken. The procedure for resolving emergency grievances shall provide for expedited responses at every level of decision. The emergency procedure shall also include review by a person or entity not under the supervision or control of the institution.

§ 40.9 Reprisals.

The grievance procedure shall prohibit reprisals. ''Reprisal'' means any action or threat of action against anyone for the good faith use of or good faith participation in the grievance procedure. The written procedure shall include assurance that good faith use of or good faith participation in the grievance mechanism will not result in formal or informal reprisal. An inmate shall be entitled to pursue through the grievance procedure a complaint that a reprisal occurred.

§ 40.10 Records—nature; confidentiality.

(a) *Nature.* Records regarding the filing and disposition of grievances shall be collected and maintained systematically by the institution. Such records shall be preserved for at least three years following final disposition of the grievance. At a minimum, such records shall include aggregate information regarding the numbers, types and dispositions of grievances, as well as individual records of the date of and the reasons for each disposition at each stage of the procedure.

(b) *Confidentiality.* Records regarding the participation of an individual in the grievance proceedings shall be considered confidential and shall be handled under the same procedures used to protect other confidential case records. Consistent with ensuring confidentiality, staff who are participating in the disposition of a grievance shall have access to records essential to the resolution of the grievance.

Subpart B—Procedures for Obtaining Certification of a Grievance Procedure

§ 40.11 Submissions by applicant.

(a) *Written statement.* An application for certification of a grievance procedure under the Act shall be submitted to the Office of the Attorney General, U.S. Department of Justice, Main Justice Building, Washington, DC 20530, and shall include a written statement describing the grievance procedure, a brief description of the institution or institutions covered by the procedure, and accompanying plans for or evidence of implementation in each institution.

(b) *Evidence of compliance with established standards.* An applicant seeking certification of a grievance procedure as being in substantial compliance with the standards promulgated herein should submit evidence of compliance with those standards, including the following information:

(1) *Instructional materials.* A copy of the instructional materials for inmates and employees regarding use of the grievance procedure together with a description of the manner in which such materials are distributed, a description of the oral explanation of the grievance procedure, including the circumstances under which it is delivered, and a description of the training, if any, provided to employees and inmates in the skills necessary to operate the grievance procedure.

(2) *Form.* A copy of the form used by inmates to initiate a grievance and to obtain review of the disposition of a grievance.

(3) *Information regarding past compliance.* For a grievance procedure that has operated for more than one year at the time of the application, the applicant shall submit information regarding the number and types of grievances filed over the preceding year, the disposition of the grievances with sample responses from each level of decision, the remedies granted, evidence of compliance with time limits at each level of decision, and a description of the role of inmates and employees in the formulation, implementation, and operation of the grievance procedure.

(4) *Plan for collecting information.* For a grievance procedure that has operated for less than one year at the time of the application, the applicant shall submit a plan for collecting the information described in paragraph (b)(3) of this section.

(5) *Assurance of confidentiality.* A description of the steps taken to ensure the confidentiality of records of individual use of or participation in the grievance procedure.

(6) *Evaluation.* A description of the plans for periodic evaluation of the grievance procedure, including identification of the group, individuals or individual who will conduct the evaluation and identification of the person or entity not under the control of supervision of the institution who will review the evaluation, together with two copies of the most recent evaluation, if one has been performed.

(c) *Fair and effective procedures.* The Attorney General shall also certify a grievance procedure under the Act, even if the procedure is not in substantial compliance with the standards promulgated herein, if the Attorney General determines that the procedure is otherwise fair and effective for the consideration and disposition of grievances filed by inmates. If a grievance procedure is not in substantial compliance with all standards herein, the applicant shall identify the aspects in which the procedure is in substantial compliance and those in which it is not, describe the other relevant features of the procedure, and explain why the procedure is otherwise fair and effective.

[Order No. 1955–95, 60 FR 13903, Mar. 15, 1995]

§40.12 Notice of intent to apply for certification.

The applicant shall post notice of its intent to request certification in prominent places in each institution to be covered by the procedure and shall provide similar written notice to the U.S. District Court(s) having jurisdiction over each institution to be covered by the procedure. The notices shall invite comments regarding the grievance procedure and direct them to the Attorney General.

§40.13 Review by the Attorney General.

The Attorney General shall review and respond to each application as promptly as the circumstances, including the need for independent investigation and consideration of the comments of agencies, and interested groups and persons, permit.

§40.14 Conditional certification.

If, in the judgment of the Attorney General, a grievance procedure that has been in existence less than one year is at the time of application in substantial compliance with the standards promulgated herein or is otherwise fair and effective, the Attorney General shall grant conditional certification for one year or until the applicant satisfies the requirements of §40.15, whichever period is shorter.

[Order No. 1955–95, 60 FR 13903, Mar. 15, 1995]

§40.15 Full certification.

If, in the judgment of the Attorney General, a grievance procedure that has been in existence longer than one year at the time of application is in substantial compliance with the standards promulgated herein or is otherwise fair and effective, the Attorney General shall grant full certification. Such certification shall remain in effect unless and until the Attorney General finds reasonable cause to believe that the grievance procedure is no longer in substantial compliance with the minimum standards or is no longer fair and effective, and so notifies the applicant in writing.

[Order No. 1955–95, 60 FR 13903, Mar. 15, 1995]

§ 40.16 Denial of certification.

If the Attorney General finds that the grievance procedure is not in substantial compliance with the standards promulgated herein or is no longer fair and effective, the Attorney General shall deny certification and inform the applicant in writing of the area or areas in which the grievance procedure or the application is deemed inadequate.

[Order No. 1955–95, 60 FR 13903, Mar. 15, 1995]

§ 40.17 Reapplication after denial of certification.

An applicant denied certification may resubmit an application for certification at any time after the inadequacy in the application or the grievance procedure is corrected.

§ 40.18 Suspension of certification.

(a) *Reasonable belief of non-compliance.* If the Attorney General has reasonable grounds to believe that a previously certified grievance procedure may no longer be in substantial compliance with the minimum standards or may no longer be fair and effective, the Attorney General shall suspend certification. The suspension shall continue until such time as the deficiency is corrected, in which case certification shall be reinstated, or until the Attorney General determines that substantial compliance no longer exists or that the procedure is no longer fair and effective, in which case, except as provided in paragraph (b) of this section, the Attorney General shall withdraw certification pursuant to § 40.19 of this part.

(b) *Defect may be readily remedied; good faith effort.* If the Attorney General determines that a grievance procedure is no longer in substantial compliance with the minimum standards or is no longer fair and effective, but has reason to believe that the defect may be readily corrected and that good faith efforts are underway to correct it, the Attorney General may suspend certification until the grievance procedure returns to compliance with the minimum standards or is otherwise fair and effective.

(c) *Recertification after suspension pursuant to paragraph (a) of this section.* The Attorney General shall reinstate the certification of an applicant whose certification was suspended pursuant to paragraph (a) of this section upon a demonstration in writing by the applicant that the specific deficiency on which the suspension was based has been corrected or that the information that caused the Attorney General to suspend certification was erroneous.

(d) *Recertification after suspension pursuant to paragraph (b) of this section.* The Attorney General shall reinstate the certification of an applicant whose certification has been suspended pursuant to paragraph (b) of this section upon a demonstration in writing that the deficiency on which the suspension was based has been corrected.

(e) *Notification in writing of suspension or reinstatement.* The Attorney General shall notify an applicant in writing that certification has been suspended or reinstated and state the reasons for the action.

[Order No. 957–81, 46 FR 48186, Oct. 1, 1981, as amended by Order No. 1955–95, 60 FR 13903, Mar. 15, 1995]

§ 40.19 Withdrawal of certification.

(a) *Finding of non-compliance.* If the Attorney General finds that a grievance procedure is no longer in substantial compliance with the minimum standards or is no longer otherwise fair and effective, the Attorney General shall withdraw certification, unless the Attorney General concludes that suspension of certification under § 40.18(b) of this part is appropriate.

(b) *Notification in writing of withdrawal of certification.* The Attorney General shall notify an applicant in writing that certification has been withdrawn and state the reasons for the action.

(c) *Recertification after withdrawal.* An applicant whose certification has been withdrawn and who wishes to receive recertification shall submit a new application for certification.

[Order No. 957–81, 46 FR 48186, Oct. 1, 1981, as amended by Order No. 1955–95, 60 FR 13903, Mar. 15, 1995]

§ 40.20 Contemplated change in certified procedure.

A proposed change in a certified procedure must be submitted to the Attorney General thirty days in advance of

its proposed effective date. The Attorney General shall review such proposed change and notify the applicant in writing before the effective date of the proposed change if such change will result in suspension or withdrawal of the certification of the grievance procedure.

§40.21 Notification of court.

The Attorney General shall notify in writing the Chief Judges of the U.S. Court of Appeals and of the U.S. District Court(s) within whose jurisdiction the applicant is located of the certification, suspension of certification, withdrawal of certification and recertification of the applicant's grievance procedure. The Attorney General shall also notify the court of the certification status of any grievance procedure at the request of the court or any party in an action by an adult inmate pursuant to 42 U.S.C. 1983.

§40.22 Significance of certification.

Certification of a grievance procedure by the Attorney General shall signify only that on the basis of the information submitted, the Attorney General believes the grievance procedure is in substantial compliance with the minimum standards or is otherwise fair and effective. Certification shall not indicate approval of the use or application of the grievance procedure in a particular case.

[Order No. 1955–95, 60 FR 13904, Mar. 15, 1995]

PART 41—IMPLEMENTATION OF EXECUTIVE ORDER 12250, NONDISCRIMINATION ON THE BASIS OF HANDICAP IN FEDERALLY ASSISTED PROGRAMS

Subpart A—Federal Agency Responsibilities

Sec.
41.1 Purpose.
41.2 Application.
41.3 Definitions.
41.4 Issuance of agency regulations.
41.5 Enforcement.
41.6 Interagency cooperation.
41.7 Coordination with sections 502 and 503.

Subpart B—Standards for Determining Who Are Handicapped Persons

41.31 Handicapped person.
41.32 Qualified handicapped person.

Subpart C—Guidelines for Determining Discriminatory Practices

GENERAL

41.51 General prohibitions against discrimination.

EMPLOYMENT

41.52 General prohibitions against employment discrimination.
41.53 Reasonable accommodation.
41.54 Employment criteria.
41.55 Preemployment inquiries.

PROGRAM ACCESSIBILITY

41.56 General requirement concerning program accessibility.
41.57 Existing facilities.
41.58 New construction.

APPENDIX A TO PART 41—LEADERSHIP AND COORDINATION OF NONDISCRIMINATION LAWS

AUTHORITY: Executive Order 12250, 45 FR 72995; sec. 504, Rehabilitation Act of 1973, Pub. L. 93–112, 87 Stat. 394 (29 U.S.C. 794); sec. 111(a), Rehabilitation Act Amendments of 1974, Pub. L. 93–516, 88 Stat. 1619 (29 U.S.C. 706).

SOURCE: 43 FR 2132, Jan. 13, 1978, unless otherwise noted. Redesignated at 46 FR 40686, 40687, Aug. 11, 1981.

EFFECTIVE DATE NOTE: At 46 FR 40687, Aug. 11, 1981, the application of part 41 with respect to mass transportation was suspended until further notice.

Subpart A—Federal Agency Responsibilities

§41.1 Purpose.

The purpose of this part is to implement Executive Order 12250, which requires the Department of Justice to coordinate the implementation of section 504 of the Rehabilitation Act of 1973.

[43 FR 2132, Jan. 13, 1978. Redesignated and amended at 46 FR 40686, 40687, Aug. 11, 1981]

§41.2 Application.

This part applies to each Federal department and agency that is empowered to extend Federal financial assistance.

§ 41.3 Definitions.

As used in this regulation, the term:

(a) *Executive Order* means Executive Order 12250, titled ''Leadership and Coordination of Nondiscrimination Laws,'' issued November 2, 1980.

(b) *Section 504* means section 504 of the Rehabilitation Act of 1973, Public Law 93–112, as amended by the Rehabilitation Act Amendments of 1974, Public Law 93–516, 29 U.S.C. 794.

(c) *Agency* means a Federal department or agency that is empowered to extend financial assistance.

(d) *Recipient* means any State or its political subdivision, any instrumentality of a State or its political subdivision, any public or private agency, institution, organization, or other entity, or any person to which Federal financial assistance is extended directly or through another recipient, including any successor, assignee, or transferee of a recipient, but excluding the ultimate beneficiary of the assistance.

(e) *Federal financial assistance* means any grant, loan, contract (other than a procurement contract or a contract of insurance or guaranty), or any other arrangement by which the agency provides or otherwise makes available assistance in the form of:

(1) Funds;

(2) Services of Federal personnel; or

(3) Real and personal property or any interest in or use of such property, including:

(i) Transfers or leases of such property for less than fair market value or for reduced consideration; and

(ii) Proceeds from a subsequent transfer or lease of such property if the Federal share of its fair market value is not returned to the Federal Government.

(f) *Facility* means all or any portion of buildings, structures, equipment, roads, walks, parking lots, or other real or personal property or interest in such property.

[43 FR 2132, Jan. 13, 1978. Redesignated and amended at 46 FR 40686, 40687, Aug. 11, 1981]

§ 41.4 Issuance of agency regulations.

(a) Each agency shall issue, after notice and opportunity for comment, a regulation to implement section 504 with respect to the programs and activities to which it provides assistance. The regulation shall be consistent with this part.

(b) Each agency shall issue a notice of proposed rulemaking no later than 90 days after the effective date of this part. Each agency shall issue a final regulation no later than 135 days after the end of the period for comment on its proposed regulation: *Provided*, That the agency shall submit its proposed final regulation to the Assistant Attorney General, Civil Rights Division, Department of Justice, for review at least 45 days before it is to be issued.

(c) Each such agency regulation shall:

(1) Define appropriate terms, consistent with the definitions set forth in § 41.3 and with the standards for determining who are handicapped persons set forth in subpart B of this part; and

(2) Prohibit discriminatory practices against qualified handicapped persons in employment and in the provision of aid, benefits, or services, consistent with the guidelines set forth in subpart C of this part.

The regulation shall include, where appropriate, specific provisions adapted to the particular programs and activities receiving financial assistance from the agency.

[43 FR 2132, Jan. 13, 1978. Redesignated and amended at 46 FR 40686, 40687, Aug. 11, 1981]

§ 41.5 Enforcement.

(a) Each agency shall establish a system for the enforcement of section 504 and its implementing regulation with respect to the programs and activities to which it provides assistance. The system shall include:

(1) The enforcement and hearing procedures that the agency has adopted for the enforcement of title VI of the Civil Rights Act of 1964, and

(2) A requirement that recipients sign assurances of compliance with section 504.

(b) Each agency regulation shall also include requirements that recipients:

(1) Notify employees and beneficiaries of their rights under section 504,

(2) Conduct a self-evaluation of their compliance with section 504, with the

assistance of interested persons, including handicapped persons or organizations representing handicapped persons, and

(3) Otherwise consult with interested persons, including handicapped persons or organizations representing handicapped persons, in achieving compliance with section 504.

§41.6 Interagency cooperation.

(a) Where each of a substantial number of recipients is receiving assistance for similar or related purposes from two or more agencies or where two or more agencies cooperate in administering assistance for a given class of recipients, the agencies shall:

(1) Coordinate compliance with section 504, and

(2) Designate one of the agencies as the primary agency for section 504 compliance purposes.

(b) Any agency conducting a compliance review or investigating a compliant of an alleged section 504 violation shall notify any other affected agency upon discovery of its jurisdiction and shall inform it of the findings made. Reviews or investigations may be made on a joint basis.

§41.7 Coordination with sections 502 and 503.

(a) Agencies shall consult with the Architectural and Transportation Barriers Compliance Board in developing requirements for the accessibility of new facilities and alterations, as required in §41.58, and shall coordinate with the Board in enforcing such requirements with respect to facilities that are subject to section 502 of the Rehabilitation Act of 1973, as amended, as well as to section 504.

(b) Agencies shall coordinate with the Department of Labor in enforcing requirements concerning employment discrimination with respect to recipients that are also federal contractors subject to section 503 of the Rehabilitation Act of 1973, as amended.

Subpart B—Standards for Determining Who Are Handicapped Persons

§41.31 Handicapped person.

(a) *Handicapped person* means any person who has a physical or mental impairment that substantially limits one or more major life activities, has a record of such an impairment, or is regarded as having such an impairment.

(b) As used in paragraph (a) of this section, the phrase:

(1) *Physical or mental impairment* means:

(i) Any physiological disorder or condition, cosmetic disfigurement, or anatomical loss affecting one or more of the following body systems: Neurological; musculoskeletal; special sense organs; respiratory, including speech organs; cardiovascular; reproductive; digestive; genitourinary; hemic and lymphatic; skin; and endocrine; or

(ii) Any mental or psychological disorder, such as mental retardation, organic brain syndrome, emotional or mental illness, and specific learning disabilities.

The term ''physical or mental impairment'' includes, but is not limited to, such diseases and conditions as orthopedic, visual, speech, and hearing impairments, cerebral palsy, epilepsy, muscular dystrophy, multiple sclerosis, cancer, heart disease, diabetes, mental retardation, emotional illness, and drug addiction and alcoholism.

(2) *Major life activities* means functions such as caring for one's self, performing manual tasks, walking, seeing, hearing, speaking, breathing, learning, and working.

(3) *Has a record of such an impairment* means has a history of, or has been misclassified as having, a mental or physical impairment that substantially limits one or more major life activities.

(4) *Is regarded as having an impairment* means:

(i) Has a physical or mental impairment that does not substantially limit major life activities but is treated by a recipient as constituting such a limitation;

(ii) Has a physical or mental impairment that substantially limits major

life activities only as a result of the attitudes of others toward such impairment; or

(iii) Has none of the impairments defined in paragraph (b)(1) of this section but is treated by a recipient as having such an impairment.

§ 41.32 Qualified handicapped person.

Qualified handicapped person means:

(a) With respect to employment, a handicapped person who, with reasonable accommodation, can perform the essential functions of the job in question and

(b) With respect to services, a handicapped person who meets the essential eligibility requirements for the receipt of such services.

Subpart C—Guidelines for Determining Discriminatory Practices

GENERAL

§ 41.51 General prohibitions against discrimination.

(a) No qualified handicapped person, shall, on the basis of handicap, be excluded from participation in, be denied the benefits of, or otherwise be subjected to discrimination under any program or activity that receives or benefits from federal financial assistance.

(b)(1) A recipient, in providing any aid, benefit, or service, may not, directly or through contractual, licensing, or other arrangements, on the basis of handicap:

(i) Deny a qualified handicapped person the opportunity to participate in or benefit from the aid, benefit, or service;

(ii) Afford a qualified handicapped person an opportunity to participate in or benefit from the aid, benefit, or service that is not equal to that afforded others;

(iii) Provide a qualified handicapped person with an aid, benefit, or service that is not as effective in affording equal opportunity to obtain the same result, to gain the same benefit, or to reach the same level of achievement as that provided to others;

(iv) Provide different or separate aid, benefits, or services to handicapped persons or to any class of handicapped persons than is provided to others unless such action is necessary to provide qualified handicapped persons with aid, benefits, or services that are as effective as those provided to others;

(v) Aid or perpetuate discrimination against a qualified handicapped person by providing significant assistance to an agency, organization, or person that discriminates on the basis of handicap in providing any aid, benefit, or service to beneficiaries of the recipient's program;

(vi) Deny a qualified handicapped person the opportunity to participate as a member of planning or advisory boards; or

(vii) Otherwise limit a qualified handicapped person in the enjoyment of any right, privilege, advantage, or opportunity enjoyed by others receiving the aid, benefit, or service.

(2) A recipient may not deny a qualified handicapped person the opportunity to participate in programs or activities that are not separate or different, despite the existence of permissibly separate or different programs or activities.

(3) A recipient may not, directly or through contractual or other arrangements, utilize criteria or methods of administration:

(i) That have the effect of subjecting qualified handicapped persons to discrimination on the basis of handicap,

(ii) That have the purpose or effect of defeating or substantially impairing accomplishment of the objectives of the recipient's program with respect to handicapped persons, or

(iii) That perpetuate the discrimination of another recipient if both recipients are subject to common administrative control or are agencies of the same state.

(4) A recipient may not, in determining the site or location of a facility, make selections:

(i) That have the effect of excluding handicapped persons from, denying them the benefits of, or otherwise subjecting them to discrimination under any program or activity that receives or benefits from federal financial assistance or

(ii) That have the purpose or effect of defeating or substantially impairing the accomplishment of the objectives

of the program or activity with respect to handicapped persons.

(c) The exclusion of nonhandicapped persons from the benefits of a program limited by federal statute or executive order to handicapped persons or the exclusion of a specific class of handicapped persons from a program limited by federal statute or executive order to a different class of handicapped persons is not prohibited by this part.

(d) Recipients shall administer programs and activities in the most integrated setting appropriate to the needs of qualified handicapped persons.

(e) Recipients shall take appropriate steps to ensure that communications with their applicants, employees, and beneficiaries are available to persons with impaired vision and hearing.

EMPLOYMENT

§41.52 General prohibitions against employment discrimination.

(a) No qualified handicapped person shall, on the basis of handicap, be subjected to discrimination in employment under any program or activity that receives or benefits from federal financial assistance.

(b) A recipient shall make all decisions concerning employment under any program or activity to which this part applies in a manner which ensures that discrimination on the basis of handicap does not occur and may not limit, segregate, or classify applicants or employees in any way that adversely affects their opportunities or status because of handicap.

(c) The prohibition against discrimination in employment applies to the following activities:

(1) Recruitment, advertising, and the processing of applications for employment;

(2) Hiring, upgrading, promotion, award of tenure, demotion, transfer, layoff, termination, right of return from layoff, and rehiring;

(3) Rates of pay or any other form of compensation and changes in compensation;

(4) Job assignments, job classifications, organizational structures, position descriptions, lines of progression, and seniority lists;

(5) Leaves of absence, sick leave, or any other leave;

(6) Fringe benefits available by virtue of employment, whether or not administered by the recipient;

(7) Selection and financial support for training, including apprenticeship, professional meetings, conferences, and other related activities, and selection for leaves of absence to pursue training;

(8) Employer sponsored activities, including social or recreational programs; and

(9) Any other term, condition, or privilege of employment.

(d) A recipient may not participate in a contractual or other relationship that has the effect of subjecting qualified handicapped applicants or employees to discrimination prohibited by this subpart. The relationships referred to in this paragraph include relationships with employment and referral agencies, with labor unions, with organizations providing or administering fringe benefits to employees of the recipient, and with organizations providing training and apprenticeship programs.

§41.53 Reasonable accommodation.

A recipient shall make reasonable accommodation to the known physical or mental limitations of an otherwise qualified handicapped applicant or employee unless the recipient can demonstrate that the accommodation would impose an undue hardship on the operation of its program.

§41.54 Employment criteria.

A recipient may not use employment tests or criteria that discriminate against handicapped persons and shall ensure that employment tests are adapted for use by persons who have handicaps that impair sensory, manual, or speaking skills.

§41.55 Preemployment inquiries.

A recipient may not conduct a preemployment medical examination or make a preemployment inquiry as to whether an applicant is a handicapped person or as to the nature or severity of a handicap except under the circumstances described in 28 CFR 42.513.

[43 FR 2132, Jan. 13, 1978. Redesignated and amended at 46 FR 40686, 40687, Aug. 11, 1981]

PROGRAM ACCESSIBILITY

§ 41.56 General requirement concerning program accessibility.

No qualified handicapped person shall, because a recipient's facilities are inaccessible to or unusable by handicapped persons, be denied the benefits of, be excluded from participation in, or otherwise be subjected to discrimination under any program or activity that receives or benefits from federal financial assistance.

§ 41.57 Existing facilities.

(a) A recipient shall operate each program or activity so that the program or activity, when viewed in its entirety, is readily accessible to and usable by handicapped persons. This paragraph does not necessarily require a recipient to make each of its existing facilities or every part of an existing facility accessible to and usable by handicapped persons.

(b) Where structural changes are necessary to make programs or activities in existing facilities accessible, such changes shall be made as soon as practicable, but in no event later than three years after the effective date of the agency regulation: *Provided,* That, if the program is a particular mode of transportation (e.g., a subway system) that can be made accessible only through extraordinarily expensive structural changes to, or replacement of, existing facilities and if other accessible modes of transportation are available, the federal agency responsible for enforcing section 504 with respect to that program may extend this period of time, but only for a reasonable and definite period, such period to be set forth in the agency's regulation.

(c) In the event that structural changes to facilities are necessary to meet the requirement of paragraph (a) of this section, a recipient shall develop, within a definite period to be established in each agency's regulation, a transition plan setting forth the steps necessary to complete such changes. The plan shall be developed with the assistance of interested persons, including handicapped persons or organizations representing handicapped persons.

[43 FR 2132, Jan. 13, 1978. Redesignated and amended at 46 FR 40686, 40687, Aug. 11, 1981]

EFFECTIVE DATE NOTE: At Order No. 1301–88, 53 FR 37754, Sept. 28, 1988, the application of § 41.57(b) to public housing timeframes was suspended.

§ 41.58 New construction.

(a) Except as provided in paragraph (b) of this section, new facilities shall be designed and constructed to be readily accessible to and usable by handicapped persons. Alterations to existing facilities shall, to the maximum extent feasible, be designed and constructed to be readily accessible to and usable by handicapped persons.

(b) The Department of Transportation may defer the effective date for requiring all new buses to be accessible if it concludes on the basis of its section 504 rulemaking process that it is not feasible to require compliance on the effective date of its regulation: *Provided,* That comparable, accessible services are available to handicapped persons in the interim and that the date is not deferred later than October 1, 1979.

APPENDIX A TO PART 41—LEADERSHIP AND COORDINATION OF NONDISCRIMINATION LAWS

EXECUTIVE ORDER 12250, NOV. 2, 1980

By the authority vested in me as President by the Constitution and statutes of the United States of America, including section 602 of the Civil Rights Act of 1964 (42 U.S.C. 2000d–1), section 902 of the Education Amendments of 1972 (20 U.S.C. 1682), and section 301 of title 3 of the United States Code, and in order to provide, under the leadership of the Attorney General, for the consistent and effective implementation of various laws prohibiting discriminatory practices in Federal programs and programs receiving Federal financial assistance, it is hereby ordered as follows:

1–1. *Delegation of Function.*

1–101. The function vested in the President by section 602 of the Civil Rights Act of 1964 (42 U.S.C. 2000d–1), relating to the approval of rules, regulations, and orders of general applicability, is hereby delegated to the Attorney General.

1–102. The function vested in the President by section 902 of the Education Amendments

of 1972 (20 U.S.C. 1682), relating to the approval of rules, regulations, and orders of general applicability, is hereby delegated to the Attorney General.

1–2. *Coordination of Nondiscrimination Provisions.*

1–201. The Attorney General shall coordinate the implementation and enforcement by Executive agencies of various nondiscrimination provisions of the following laws:

(a) Title VI of the Civil Rights Act of 1964 (42 U.S.C. 2000d *et seq.*).

(b) Title IX of the Education Amendments of 1972 (20 U.S.C. 1681 *et seq.*).

(c) Section 504 of the Rehabilitation Act of 1973, as amended (29 U.S.C. 794).

(d) Any other provision of Federal statutory law which provides, in whole or in part, that no person in the United States shall, on the ground of race, color, national origin, handicap, religion, or sex, be excluded from participation in, be denied the benefits of, or be subject to discrimination under any program or activity receiving Federal financial assistance.

1–202. In furtherance of the Attorney General's responsibility for the coordination of the implementation and enforcement of the nondiscrimination provisions of laws covered by this Order, the Attorney General shall review the existing and proposed rules, regulations, and orders of general applicability of the Executive agencies in order to identify those which are inadequate, unclear or unnecessarily inconsistent.

1–203. The Attorney General shall develop standards and procedures for taking enforcement actions and for conducting investigations and compliance reviews.

1–204. The Attorney General shall issue guidelines for establishing reasonable time limits on efforts to secure voluntary compliance, on the initiation of sanctions, and for referral to the Department of Justice for enforcement where there is noncompliance.

1–205. The Attorney General shall establish and implement a schedule for the review of the agencies' regulations which implement the various nondiscrimination laws covered by this Order.

1–206. The Attorney General shall establish guidelines and standards for the development of consistent and effective recordkeeping and reporting requirements by Executive agencies; for the sharing and exchange by agencies of compliance records, findings, and supporting documentation; for the development of comprehensive employee training programs; for the development of effective information programs; and for the development of cooperative programs with State and local agencies, including sharing of information, deferring of enforcement activities, and providing technical assistance.

1–207. The Attorney General shall initiate cooperative programs between and among agencies, including the development of sample memoranda of understanding, designed to improve the coordination of the laws covered by this Order.

1–3. *Implementation by the Attorney General.*

1–301. In consultation with the affected agencies, the Attorney General shall promptly prepare a plan for the implementation of this Order. This plan shall be submitted to the Director of the Office of Management and Budget.

1–302. The Attorney General shall periodically evaluate the implementation of the nondiscrimination provisions of the laws covered by this Order, and advise the heads of the agencies concerned on the results of such evaluations as to recommendations for needed improvement in implementation or enforcement.

1–303. The Attorney General shall carry out his functions under this Order, including the issuance of such regulations as he deems necessary, in consultation with affected agencies.

1–304. The Attorney General shall annually report to the President through the Director of the Office of Management and Budget on the progress in achieving the purposes of this Order. This report shall include any recommendations for changes in the implementation or enforcement of the nondiscrimination provisions of the laws covered by this Order.

1–305. The Attorney General shall chair the Interagency Coordinating Council established by section 507 of the Rehabilitation Act of 1973, as amended (29 U.S.C. 794c).

1–4. *Agency Implementation.*

1–401. Each Executive agency shall cooperate with the Attorney General in the performance of the Attorney General's functions under this Order and shall, unless prohibited by law, furnish such reports and information as the Attorney General may request.

1–402. Each Executive agency responsible for implementing a nondiscrimination provision of a law covered by this Order shall issue appropriate implementing directives (whether in the nature of regulations or policy guidance). To the extent permitted by law, they shall be consistent with the requirements prescribed by the Attorney General pursuant to this Order and shall be subject to the approval of the Attorney General, who may require that some or all of them be submitted for approval before taking effect.

1–403. Within 60 days after a date set by the Attorney General, Executive agencies shall submit to the Attorney General their plans for implementing their responsibilities under this Order.

1–5. *General Provisions.*

1–501. Executive Order No. 11764 is revoked. The present regulations of the Attorney General relating to the coordination of enforcement of title VI of the Civil Rights Act of 1964 shall continue in effect until revoked or modified (28 CFR 42.401 to 42.415).

1–502. Executive Order No. 11914 is revoked. The present regulations of the Secretary of Health and Human Services relating to the coordination of the implementation of section 504 of the Rehabilitation Act of 1973, as amended, shall be deemed to have been issued by the Attorney General pursuant to this Order and shall continue in effect until revoked or modified by the Attorney General.

1–503. Nothing in this Order shall vest the Attorney General with the authority to coordinate the implementation and enforcement by Executive agencies of statutory provisions relating to equal employment.

1–504. Existing agency regulations implementing the nondiscrimination provisions of laws covered by this Order shall continue in effect until revoked or modified.

JIMMY CARTER

The White House,
November 2, 1980.

[47 FR 32421, July 27, 1982]

PART 42—NONDISCRIMINATION; EQUAL EMPLOYMENT OPPORTUNITY; POLICIES AND PROCEDURES

Subpart A—Equal Employment Opportunity Within the Department of Justice

Sec.
42.1 Policy.
42.2 Designation of Director of Equal Employment Opportunity and Complaint Adjudication Officer.
42.3 Responsibility for Department of Justice Equal Opportunity Recruitment Program.

Subpart B [Reserved]

Subpart C—Nondiscrimination in Federally Assisted Programs—Implementation of Title VI of the Civil Rights Act of 1964

42.101 Purpose.
42.102 Definitions.
42.103 Application of this subpart.
42.104 Discrimination prohibited.
42.105 Assurance required.
42.106 Compliance information.
42.107 Conduct of investigations.
42.108 Procedure for effecting compliance.
42.109 Hearings.
42.110 Decisions and notices.
42.111 Judicial review.
42.112 Effect on other regulations; forms and instructions.
APPENDIX A TO SUBPART C—FEDERAL FINANCIAL ASSISTANCE ADMINISTERED BY THE DEPARTMENT OF JUSTICE TO WHICH THIS SUBPART APPLIES

Subpart D—Nondiscrimination in Federally Assisted Programs—Implementation of Section 815(c)(1) of the Justice System Improvement Act of 1979

42.201 Purpose and application.
42.202 Definitions.
42.203 Discrimination prohibited.
42.204 Applicants' obligations.
42.205 Complaint investigation.
42.206 Compliance reviews.
42.207 Compliance information.
42.208 Notice of noncompliance.
42.209 Compliance secured.
42.210 Compliance not secured.
42.211 Resumption of suspended funds.
42.212 Preliminary hearing.
42.213 Full hearing.
42.214 Judicial review.
42.215 Other actions authorized under the JSIA.
APPENDIX A TO SUBPART D—COMMENTARY

Subpart E—Equal Employment Opportunity Program Guidelines

42.301 Purpose.
42.302 Application.
42.303 Evaluation of employment opportunities.
42.304 Written equal employment opportunity program.
42.305 Recordkeeping and certification.
42.306 Guidelines.
42.307 Obligations of recipients.
42.308 Noncompliance.

Subpart F—Coordination of Enforcement of Non-discrimination in Federally Assisted Programs

42.401 Purpose and application.
42.402 Definitions.
42.403 Agency regulations.
42.404 Guidelines.
42.405 Public dissemination of title VI information.
42.406 Data and information collection.
42.407 Procedures to determine compliance.
42.408 Complaint procedures.
42.409 Employment practices.
42.410 Continuing State programs.
42.411 Methods of resolving noncompliance.
42.412 Coordination.
42.413 Interagency cooperation and delegations.
42.414 Federal agency staff.

42.415 Federal agency title VI enforcement plan.

Subpart G—Nondiscrimination Based on Handicap in Federally Assisted Programs or Activities—Implementation of Section 504 of the Rehabilitation Act of 1973

GENERAL PROVISIONS

42.501 Purpose.
42.502 Application.
42.503 Discrimination prohibited.
42.504 Assurances required.
42.505 Administrative requirements for recipients.

EMPLOYMENT

42.510 Discrimination prohibited.
42.511 Reasonable accommodation.
42.512 Employment criteria.
42.513 Preemployment inquiries.

PROGRAM ACCESSIBILITY

42.520 Discrimination prohibited.
42.521 Existing facilities.
42.522 New construction.

PROCEDURES

42.530 Procedures.

DEFINITIONS

42.540 Definitions.

APPENDIX A TO SUBPART G—FEDERAL FINANCIAL ASSISTANCE ADMINISTERED BY THE DEPARTMENT OF JUSTICE TO WHICH THIS SUBPART APPLIES
APPENDIX B TO SUBPART G [RESERVED]
APPENDIX C TO SUBPART G—DEPARTMENT REGULATIONS UNDER TITLE VI OF THE CIVIL RIGHTS ACT OF 1964 (28 CFR 42.106–42.110) WHICH APPLY TO THIS SUBPART [NOTE]
APPENDIX D TO SUBPART G—OJARS' REGULATIONS UNDER THE OMNIBUS CRIME CONTROL AND SAFE STREETS ACT, AS AMENDED, WHICH APPLY TO THIS SUBPART (28 CFR 42.205 AND 42.206) [NOTE]

Subpart H—Procedures for Complaints of Employment Discrimination Filed Against Recipients of Federal Financial Assistance

42.601 Purpose and application.
42.602 Exchange of information.
42.603 Confidentiality.
42.604 Standards for investigation, reviews and hearings.
42.605 Agency processing of complaints of employment discrimination.
42.606 General rules concerning EEOC action on complaints.
42.607 EEOC dismissals of complaints.
42.608 Agency action on complaints dismissed by EEOC.
42.609 EEOC reasonable cause determination and conciliation efforts.
42.610 Agency enforcement of unresolved complaints.
42.611 EEOC negotiated settlements and conciliation agreements.
42.612 Interagency consultation.
42.613 Definitions.

Subpart I—Nondiscrimination on the Basis of Age in Federally Assisted Programs or Activities; Implementation of the Age Discrimination Act of 1975

GENERAL PROVISIONS

42.700 Purpose.
42.701 Application.
42.702 Definitions.
42.703–42.709 [Reserved]

STANDARDS FOR DETERMINING AGE DISCRIMINATION

42.710 General prohibition.
42.711 Exception; authorized by law.
42.712 Exception; normal operation or statutory objective.
42.713 Exception; reasonable factors other than age.
42.714 Special benefits.
42.715 Burden of proof regarding exceptions.
42.716–42.719 [Reserved]

DUTIES OF RECIPIENTS

42.720 General responsibility.
42.721 Notice to subrecipients.
42.722 Recipient assessment of age distinctions.
42.723 Compliance information.
42.724 Remedial and affirmative action.
42.725 Assurance of compliance.
42.726–42.729 [Reserved]

COMPLIANCE PROCEDURES

42.730 Compliance reviews.
42.731 Complaints.
42.732 Prohibition against intimidation.
42.733 Enforcement procedures.
42.734 Alternative funding.
42.735 Judicial review.
42.736 Private lawsuits.
42.737–42.799 [Reserved]

APPENDIX A TO SUBPART I OF PART 42—FEDERAL FINANCIAL ASSISTANCE ADMINISTERED BY THE DEPARTMENT OF JUSTICE TO WHICH THIS SUBPART APPLIES
APPENDIX B TO SUBPART I OF PART 42—AGE DISTINCTIONS IN FEDERAL STATUTES OR REGULATIONS AFFECTING FINANCIAL ASSISTANCE ADMINISTERED BY THE DEPARTMENT OF JUSTICE

Subpart A—Equal Employment Opportunity Within the Department of Justice

AUTHORITY: 5 U.S.C. 301, 28 U.S.C. 509, 510; E.O. 11246, 3 CFR 1964–1965 Comp., p. 339; E.O. 11478, 3 CFR 1966–1970 Comp., p. 803.

§ 42.1 Policy.

(a) It is the policy of the Department of Justice to seek to eliminate discrimination on the basis of race, color, religion, sex, sexual orientation, national origin, marital status, political affiliation, age, or physical or mental handicap in employment within the Department and to assure equal employment opportunity for all employees and applicants for employment.

(b) No person shall be subject to retaliation for opposing any practice prohibited by the above policy or for participating in any stage of administrative or judicial proceedings related to this policy.

[Order No. 2037–96, 61 FR 34730, July 3, 1996; 61 FR 43119, Aug. 20, 1996]

§ 42.2 Designation of Director of Equal Employment Opportunity and Complaint Adjudication Officer.

(a) In compliance with the regulations of the Equal Employment Opportunity Commission (29 CFR 1613.204(c)), the Assistant Attorney General for Administration is hereby designated as Director of Equal Employment Opportunity for the Department of Justice with responsibilities for administration of the Equal Employment Opportunity Program within the Department. The Director of Equal Employment Opportunity shall publish and implement the Department of Justice regulations, which shall include a positive action program to eliminate causes of discrimination and shall include procedures for processing complaints of discrimination within the Department.

(b) The Assistant Attorney General in charge of the Civil Rights Division shall appoint a Complaint Adjudication Officer, who shall render final decisions for the Department of Justice on complaints of discrimination filed by employees and applicants for employment in the Department pursuant to the Department's Equal Employment Opportunity Regulations. In rendering decisions, the Complaint Adjudication Officer shall order such remedial action as may be appropriate, whether or not there is a finding of discrimination, but in cases where no discrimination is found any remedial action ordered shall have the prior approval of the Assistant Attorney General in charge of the Civil Rights Division, who shall consult with the Deputy Attorney General on the matter.

[Order No. 420–69, 34 FR 12281, July 25, 1969, as amended by Order No. 721–77, 42 FR 25725, May 19, 1977; Order No. 731–77, 42 FR 35646, July 11, 1977; Order No. 899–80, 45 FR 43703, June 30, 1980; Order No. 960–81, 46 FR 52357, Oct. 27, 1981]

§ 42.3 Responsibility for Department of Justice Equal Opportunity Recruitment Program.

The Assistant Attorney General for Administration shall be responsible for establishing and implementing the Department of Justice Equal Opportunity Recruitment Program under 5 U.S.C. 7201.

[Order No. 865–79, 44 FR 77157, Dec. 31, 1979, as amended by Order No. 960–81, 46 FR 52357, Oct. 27, 1981]

Subpart B [Reserved]

Subpart C—Nondiscrimination in Federally Assisted Programs—Implementation of Title VI of the Civil Rights Act of 1964 [1]

AUTHORITY: 42 U.S.C. 2000d–2000d–7; E.O. 12250, 45 FR 72995, 3 CFR, 1980 Comp., p. 298.

SOURCE: Order No. 365–66, 31 FR 10265, July 29, 1966, unless otherwise noted.

EDITORIAL NOTE: Nomenclature changes by Order No. 2679–2003, appear at 68 FR 51364, Aug. 26, 2003.

§ 42.101 Purpose.

The purpose of this subpart is to implement the provisions of title VI of the Civil Rights Act of 1964, 78 Stat. 252 (hereafter referred to as the ''Act''), to the end that no person in the United States shall, on the ground of race,

[1] See also 28 CFR 50.3. Guidelines for enforcement of Title VI, Civil Rights Act.

color, or national origin, be excluded from participation in, be denied the benefits of, or otherwise be subjected to discrimination under any program or activity receiving Federal financial assistance from the Department of Justice.

§ 42.102 Definitions.

As used in this subpart—

(a) The term *responsible Department official* with respect to any program receiving Federal financial assistance means the Attorney General, or Deputy Attorney General, or such other official of the Department as has been assigned the principal responsibility within the Department for the administration of the law extending such assistance.

(b) The term *United States* includes the several States of the United States, the District of Columbia, the Commonwealth of Puerto Rico, the Virgin Islands, American Samoa, Guam, Wake Island, the Canal Zone, and all other territories and possessions of the United States, and the term *State* includes any one of the foregoing.

(c) The term *Federal financial assistance* includes:

(1) Grants and loans of Federal funds,

(2) The grant or donation of Federal property and interests in property,

(3) The detail of Federal personnel,

(4) The sale and lease of, and the permission to use (on other than a casual or transient basis), Federal property or any interest in such property without consideration or at a nominal consideration, or at a consideration which is reduced for the purpose of assisting the recipient, or in recognition of the public interest to be served by such sale or lease to the recipient, and

(5) Any Federal agreement, arrangement, or other contract which has as one of its purposes the provision of assistance.

(d) The terms *program or activity* and *program* mean all of the operations of any entity described in paragraphs (d)(1) through (4) of this section, any part of which is extended Federal financial assistance:

(1)(i) A department, agency, special purpose district, or other instrumentality of a State or of a local government; or

(ii) The entity of such State or local government that distributes such assistance and each such department or agency (and each other State or local government entity) to which the assistance is extended, in the case of assistance to a State or local government;

(2)(i) A college, university, or other postsecondary institution, or a public system of higher education; or

(ii) A local educational agency (as defined in 20 U.S.C. 7801), system of vocational education, or other school system;

(3)(i) An entire corporation, partnership, or other private organization, or an entire sole proprietorship—

(A) If assistance is extended to such corporation, partnership, private organization, or sole proprietorship as a whole; or

(B) Which is principally engaged in the business of providing education, health care, housing, social services, or parks and recreation; or

(ii) The entire plant or other comparable, geographically separate facility to which Federal financial assistance is extended, in the case of any other corporation, partnership, private organization, or sole proprietorship; or

(4) Any other entity which is established by two or more of the entities described in paragraph (d)(1), (2), or (3) of this section.

(e) The term *facility* includes all or any portion of structures, equipment, or other real or personal property or interests therein, and the provision of facilities includes the construction, expansion, renovation, remodeling, alteration, or acquisition of facilities.

(f) The term *recipient* means any State, political subdivision of any State, or instrumentality of any State or political subdivision, any public or private agency, institution, or organization, or other entity, or any individual, in any State, to whom Federal financial assistance is extended, directly or through another recipient, including any successor, assign, or transferee thereof, but such term does not include any ultimate beneficiary.

(g) The term *primary recipient* means any recipient which is authorized or required to extend Federal financial assistance to another recipient.

(h) The term *applicant* means one who submits an application, request, or plan required to be approved by a responsible Department official, or by a primary recipient, as a condition to eligibility for Federal financial assistance, and the term *application* means such an application, request, or plan.

(i) The term *academic institution* includes any school, academy, college, university, institute, or other association, organization, or agency conducting or administering any program, project, or facility designed to educate or train individuals.

(j) The term *disposition* means any treatment, handling, decision, sentencing, confinement, or other prescription of conduct.

(k) The term *governmental organization* means the political subdivision for a prescribed geographical area.

[Order No. 365–66, 31 FR 10265, July 29, 1966, as amended by Order No. 699–77, 42 FR 15315, Mar. 21, 1977; Order No. 960–81, 46 FR 52357, Oct. 27, 1981; Order No. 2679–2003, 68 FR 51363, 51364, Aug. 26, 2003]

§ 42.103 Application of this subpart.

This subpart applies to any program for which Federal financial assistance is authorized under a law administered by the Department. It applies to money paid, property transferred, or other Federal financial assistance extended after the date of this subpart pursuant to an application whether approved before or after such date. This subpart does not apply to:

(a) Any Federal financial assistance by way of insurance or guaranty contracts, or

(b) Employment practices except to the extent described in § 42.104(c).

[Order No. 365–66, 31 FR 10265, July 29, 1966, as amended by Order No. 519–73, 38 FR 17955, July 5, 1973]

§ 42.104 Discrimination prohibited.

(a) *General.* No person in the United States shall, on the ground of race, color, or national origin be excluded from participation in, be denied the benefits of, or be otherwise subjected to discrimination under any program to which this subpart applies.

(b) *Specific discriminatory actions prohibited.* (1) A recipient to which this subpart applies may not, directly or through contractual or other arrangements, on the ground of race, color, or national origin:

(i) Deny an individual any disposition, service, financial aid, or benefit provided under the program;

(ii) Provide any disposition, service, financial aid, or benefit to an individual which is different, or is provided in a different manner, from that provided to others under the program;

(iii) Subject an individual to segregation or separate treatment in any matter related to his receipt of any disposition, service, financial aid, or benefit under the program;

(iv) Restrict an individual in any way in the enjoyment of any advantage or privilege enjoyed by others receiving any disposition, service, financial aid, or benefit under the program;

(v) Treat an individual differently from others in determining whether he satisfies any admission, enrollment, quota, eligibility, membership, or other requirement or condition which individuals must meet in order to be provided any disposition, service, financial aid, function or benefit provided under the program; or

(vi) Deny an individual an opportunity to participate in the program through the provision of services or otherwise or afford him an opportunity to do so which is different from that afforded others under the program (including the opportunity to participate in the program as an employee but only to the extent set forth in paragraph (c) of this section).

(vii) Deny a person the opportunity to participate as a member of a planning or advisory body which is an integral part of the program.

(2) A recipient, in determining the type of disposition, services, financial aid, benefits, or facilities which will be provided under any such program, or the class of individuals to whom, or the situations in which, such will be provided under any such program, or the class of individuals to be afforded an opportunity to participate in any such program, may not, directly or through contractual or other arrangements, utilize criteria or methods of administration which have the effect of subjecting individuals to discrimination because of their race, color, or national

origin, or have the effect of defeating or substantially impairing accomplishment of the objectives of the program as respects individuals of a particular race, color, or national origin.

(3) In determining the site or location of facilities, a recipient or applicant may not make selections with the purpose or effect of excluding individuals from, denying them the benefits of, or subjecting them to discrimination under any program to which this subpart applies, on the ground of race, color, or national origin; or with the purpose or effect of defeating or substantially impairing the accomplishment of the objectives of the Act or this subpart.

(4) For the purposes of this section the disposition, services, financial aid, or benefits provided under a program receiving Federal financial assistance shall be deemed to include all portions of the recipient's program or activity, including facilities, equipment, or property provided with the aid of Federal financial assistance.

(5) The enumeration of specific forms of prohibited discrimination in this paragraph and in paragraph (c) of this section does not limit the generality of the prohibition in paragraph (a) of this section.

(6)(i) In administering a program regarding which the recipient has previously discriminated against persons on the ground of race, color, or national origin, the recipient must take affirmative action to overcome the effects of prior discrimination.

(ii) Even in the absence of such prior discrimination, a recipient in administering a program may take affirmative action to overcome the effects of conditions which resulted in limiting participation by persons of a particular race, color, or national origin.

(c) *Employment practices.* (1) Whenever a primary objective of the Federal financial assistance to a program to which this subpart applies, is to provide employment, a recipient of such assistance may not (directly or through contractual or other arrangements) subject any individual to discrimination on the ground of race, color, or national origin in its employment practices under such program (including recruitment or recruitment advertising, employment, layoff, or termination, upgrading, demotion, or transfer, rates of pay or other forms of compensation, and use of facilities). That prohibition also applies to programs as to which a primary objective of the Federal financial assistance is (i) to assist individuals, through employment, to meet expenses incident to the commencement or continuation of their education or training, or (ii) to provide work experience which contributes to the education or training of the individuals involved. The requirements applicable to construction employment under any such program shall be those specified in or pursuant to part III of Executive Order 11246 or any Executive order which supersedes it.

(2) In regard to Federal financial assistance which does not have providing employment as a primary objective, the provisions of paragraph (c)(1) of this section apply to the employment practices of the recipient if discrimination on the ground of race, color, or national origin in such employment practices tends, on the ground of race, color, or national origin, to exclude persons from participation in, to deny them the benefits of or to subject them to discrimination under the program receiving Federal financial assistance. In any such case, the provisions of paragraph (c)(1) of this section shall apply to the extent necessary to assure equality of opportunity to and nondiscriminatory treatment of beneficiaries.

[Order No. 365–66, 31 FR 10265, July 29, 1966, as amended by Order No. 519–73, 38 FR 17955, July 5, 1973; Order No. 2679–2003, 68 FR 51364, Aug. 26, 2003]

§ 42.105 Assurance required.

(a) *General.* (1) Every application for Federal financial assistance to which this subpart applies, and every application for Federal financial assistance to provide a facility shall, as a condition to its approval and the extension of any Federal financial assistance pursuant to the application, contain or be accompanied by an assurance that the program will be conducted or the facility operated in compliance with all requirements imposed by or pursuant to this subpart. In the case where the

Federal financial assistance is to provide or is in the form of personal property, or real property or interest therein or structures thereon, such assurance shall obligate the recipient, or, in the case of a subsequent transfer, the transferee, for the period during which the property is used for a purpose for which the Federal financial assistance is extended or for another purpose involving the provision of similar services or benefits, or for as long as the recipient retains ownership or possession of the property, whichever is longer. In all other cases, such assurance shall obligate the recipient for the period during which Federal financial assistance is extended pursuant to the application. The responsible Department official shall specify the form of the foregoing assurances, and the extent to which like assurances will be required of subgrantees, contractors, and subcontractors, transferees, successors in interest, and other participants. Any such assurance shall include provisions which give the United States a right to seek its judicial enforcement.

(2) In the case of real property, structures or improvements thereon, or interest therein, which was acquired with Federal financial assistance, or in the case where Federal financial assistance is provided in the form of a transfer of real property or interest therein from the Federal Government, the instrument effecting or recording the transfer shall contain a convenant running with the land assuring nondiscrimination for the period during which the real property is used for a purpose for which the Federal financial assistance is extended or for another purpose involving the provision of similar services or benefits. Where no transfer of property is involved, but property is improved with Federal financial assistance, the recipient shall agree to include such a covenant in any subsequent transfer of such property. Where the property is obtained from the Federal Government, such covenant may also include a condition coupled with a right to be reserved by the Department to revert title to the property in the event of a breach of the covenant where, in the discretion of the responsible Department official, such a condition and right of reverter are appropriate to the statute under which the real property is obtained and to the nature of the grant and the grantee.

(b) *Assurances from government agencies.* In the case of any application from any department, agency, or office of any State or local government for Federal financial assistance for any specified purpose, the assurance required by this section shall extend to any other department, agency, or office of the same governmental unit if the policies of such other department, agency, or office will substantially affect the project for which Federal financial assistance is requested.

(c) *Assurance from academic and other institutions.* (1) In the case of any application for Federal financial assistance for any purpose to an academic institution, the assurance required by this section shall extend to admission practices and to all other practices relating to the treatment of students.

(2) The assurance required with respect to an academic institution, detention or correctional facility, or any other institution or facility, insofar as the assurance relates to the institution's practices with respect to admission or other treatment of individuals as students, patients, wards, inmates, persons subject to control, or clients of the institution or facility or to the opportunity to participate in the provision of services, disposition, treatment, or benefits to such individuals, shall be applicable to the entire institution or facility.

(d) *Continuing Federal financial assistance.* Any State or State agency applying for continuing Federal financial assistance subject to this regulation shall as a condition for the extension of such assistance:

(1) Provide a statement that the program is (or, in the case of a new program, will be) conducted in compliance with this regulation, and

(2) Provide for such methods of administration as are found by the responsible Department official to give reasonable assurance that the primary recipient and all other recipients of Federal financial assistance under such

program will comply with this regulation.

[Order No. 365–66, 31 FR 10265, July 29, 1966, as amended by Order No. 519–73, 38 FR 17955, July 5, 1973; Order No. 2679–2003, 68 FR 51364, Aug. 26, 2003]

§ 42.106 Compliance information.

(a) *Cooperation and assistance.* Each responsible Department official shall, to the fullest extent practicable, seek the cooperation of recipients in obtaining compliance with this subpart and shall provide assistance and guidance to recipients to help them comply voluntarily with this subpart.

(b) *Compliance reports.* Each recipient shall keep such records and submit to the responsible Department official or his designee timely, complete, and accurate compliance reports at such times, and in such form and containing such information, as the responsible Department official or his designee may determine to be necessary to enable him to ascertain whether the recipient has complied or is complying with this subpart. In general, recipients should have available for the Department racial and ethnic data showing the extent to which members of minority groups are beneficiaries of federally assisted programs. In the case in which a primary recipient extends Federal financial assistance to any other recipient or subcontracts with any other person or group, such other recipient shall also submit such compliance reports to the primary recipient as may be necessary to enable the primary recipient to carry out its obligations under this subpart.

(c) *Access to sources of information.* Each recipient shall permit access by the responsible Department official or his designee during normal business hours to such of its books, records, accounts, and other sources of information, and its facilities, as may be pertinent to ascertain compliance with this subpart. Whenever any information required of a recipient is in the exclusive possession of any other agency, institution, or person and that agency, institution, or person fails or refuses to furnish that information, the recipient shall so certify in its report and set forth the efforts which it has made to obtain the information.

(d) *Information to beneficiaries and participants.* Each recipient shall make available to participants, beneficiaries, and other interested persons such information regarding the provisions of this subpart and its applicability to the program for which the recipient receives Federal financial assistance, and make such information available to them in such manner, as the responsible Department official finds necessary to apprise such persons of the protections against discrimination assured them by the Act and this subpart.

[Order No. 365–66, 31 FR 10265, July 29, 1966, as amended by Order No. 519–73, 38 FR 17955, July 5, 1973]

§ 42.107 Conduct of investigations.

(a) *Periodic compliance reviews.* The responsible Department official or his designee shall from time to time review the practices of recipients to determine whether they are complying with this subpart.

(b) *Complaints.* Any person who believes himself or any specific class of individuals to be subjected to discrimination prohibited by this subpart may by himself or by a representative file with the responsible Department official or his designee a written complaint. A complaint must be filed not later than 180 days from the date of the alleged discrimination, unless the time for filing is extended by the responsible Department official or his designee.

(c) *Investigations.* The responsible Department official or his designee will make a prompt investigation whenever a compliance review, report, complaint, or any other information indicates a possible failure to comply with this subpart. The investigation should include, whenever appropriate, a review of the pertinent practices and policies of the recipient, the circumstances under which the possible noncompliance with this subpart occurred, and other factors relevant to a determination as to whether the recipient has failed to comply with this subpart.

(d) *Resolution of matters.* (1) If an investigation pursuant to paragraph (c) of this section indicates a failure to

comply with this subpart, the responsible Department official or his designee will so inform the recipient and the matter will be resolved by informal means whenever possible. If it has been determined that the matter cannot be resolved by informal means, action will be taken as provided for in § 42.108.

(2) If an investigation does not warrant action pursuant to paragraph (d)(1) of this section, the responsible Department official or his designee will so inform the recipient and the complainant, if any, in writing.

(e) *Intimidatory or retaliatory acts prohibited.* No recipient or other person shall intimidate, threaten, coerce, or discriminate against any individual for the purpose of interfering with any right or privilege secured by section 601 of the Act or this subpart, or because he has made a complaint, testified, assisted, or participated in any manner in an investigation, proceeding, or hearing under this subpart. The identity of complainants shall be kept confidential except to the extent necessary to carry out the purpose of this subpart, including the conduct of any investigation, hearing, or judicial proceeding arising thereunder.

[Order No. 365–66, 31 FR 10265, July 29, 1966, as amended by Order No. 519–73, 38 FR 17955, July 5, 1973]

§ 42.108 Procedure for effecting compliance.

(a) *General.* If there appears to be a failure or threatened failure to comply with this subpart and if the noncompliance or threatened noncompliance cannot be corrected by informal means, the responsible Department official may suspend or terminate, or refuse to grant or continue, Federal financial assistance, or use any other means authorized by law, to induce compliance with this subpart. Such other means include, but are not limited to:

(1) Appropriate proceedings brought by the Department to enforce any rights of the United States under any law of the United States (including other titles of the Act), or any assurance or other contractual undertaking, and

(2) Any applicable proceeding under State or local law.

(b) *Noncompliance with assurance requirement.* If an applicant or recipient fails or refuses to furnish an assurance required under § 42.105, or fails or refuses to comply with the provisions of the assurance it has furnished, or otherwise fails or refuses to comply with any requirement imposed by or pursuant to title VI or this subpart, Federal financial assistance may be suspended, terminated, or refused in accordance with the procedures of title VI and this subpart. The Department shall not be required to provide assistance in such a case during the pendency of administrative proceedings under this subpart, except that the Department will continue assistance during the pendency of such proceedings whenever such assistance is due and payable pursuant to a final commitment made or an application finally approved prior to the effective date of this subpart.

(c) *Termination of or refusal to grant or to continue Federal financial assistance.* No order suspending, terminating, or refusing to grant or continue Federal financial assistance shall become effective until:

(1) The responsible Department official has advised the applicant or recipient of his failure to comply and has determined that compliance cannot be secured by voluntary means,

(2) There has been an express finding on the record, after opportunity for hearing, of a failure by the applicant or recipient to comply with a requirement imposed by or pursuant to this subpart,

(3) The action has been approved by the Attorney General pursuant to § 42.110, and

(4) The expiration of 30 days after the Attorney General has filed with the committee of the House and the committee of the Senate having legislative jurisdiction over the program involved, a full written report of the circumstances and the grounds for such action.

Any action to suspend or terminate or to refuse to grant or to continue Federal financial assistance shall be limited to the particular political entity, or part thereof, or other applicant or recipient as to whom such a finding has been made and shall be limited in its effect to the particular program, or

part thereof, in which such noncompliance has been so found.

(d) *Other means authorized by law.* No action to effect compliance by any other means authorized by law shall be taken until:

(1) The responsible Department official has determined that compliance cannot be secured by voluntary means,

(2) The action has been approved by the Attorney General, and

(3) The recipient or other person has been notified of its failure to comply and of the action to be taken to effect compliance.

§ 42.109 Hearings.

(a) *Opportunity for hearing.* Whenever an opportunity for a hearing is required by § 42.108(c), reasonable notice shall be given by registered or certified mail, return receipt requested, to the affected applicant or recipient. That notice shall advise the applicant or recipient of the action proposed to be taken, the specific provision under which the proposed action against it is to be taken, and the matters of fact or law asserted as the basis for that action. The notice shall (1) Fix a date, not less than 20 days after the date of such notice, within which the applicant or recipient may request that the responsible Department official schedule the matter for hearing, or (2) advise the applicant or recipient that a hearing concerning the matter in question has been scheduled and advise the applicant or recipient of the place and time of that hearing. The time and place so fixed shall be reasonable and shall be subject to change for cause. The complainant, if any, shall be advised of the time and place of the hearing. An applicant or recipient may waive a hearing and submit written information and argument for the record. The failure of an applicant or recipient to request a hearing under this paragraph or to appear at a hearing for which a date has been set shall be deemed to be a waiver of the right to a hearing afforded by section 602 of the Act and § 42.108(c) and consent to the making of a decision on the basis of such information as is available.

(b) *Time and place of hearing.* Hearings shall be held at the offices of the Department in Washington, DC, at a time fixed by the responsible Department official, unless he determines that the convenience of the applicant or recipient or of the Department requires that another place be selected. Hearings shall be held before the responsible Department official or, at his discretion, before a hearing examiner designated in accordance with 5 U.S.C. 3105 and 3344 (section 11 of the Administrative Procedure Act).

(c) *Right to counsel.* In all proceedings under this section, the applicant or recipient and the Department shall have the right to be represented by counsel.

(d) *Procedures, evidence, and record.* (1) The hearing, decision, and any administrative review thereof shall be conducted in conformity with 5 U.S.C. 554–557 (sections 5–8 of the Administrative Procedure Act), and in accordance with such rules of procedure as are proper (and not inconsistent with this section) relating to the conduct of the hearing, giving of notices subsequent to those provided for in paragraph (a) of this section, taking of testimony, exhibits, arguments and briefs, requests for findings, and other related matters. Both the Department and the applicant or recipient shall be entitled to introduce all relevant evidence on the issues as stated in the notice for hearing or as determined by the officer conducting the hearing.

(2) Technical rules of evidence shall not apply to hearings conducted pursuant to this subpart, but rules or principles designed to assure production of the most credible evidence available and to subject testimony to test by cross-examination shall be applied whenever reasonably necessary by the officer conducting the hearing. The hearing officer may exclude irrelevant, immaterial, or unduly repetitious evidence. All documents and other evidence offered or taken for the record shall be open to examination by the parties and opportunity shall be given to refute facts and arguments advanced on either side of the issues. A transcript shall be made of the oral evidence except to the extent the substance thereof is stipulated for the record. All decisions shall be based upon the hearing record and written findings shall be made.

(e) *Consolidated or joint hearings.* In cases in which the same or related facts are asserted to constitute noncompliance with this subpart with respect to two or more Federal statutes, authorities, or other means by which Federal financial assistance is extended and to which this subpart applies, or noncompliance with this subpart and the regulations of one or more other Federal Departments or agencies issued under title VI of the Act, the Attorney General may, by agreement with such other departments or agencies, whenever appropriate, provide for the conduct of consolidated or joint hearings, and for the application to such hearings of rules of procedure not inconsistent with this subpart. Final decisions in such cases, insofar as this subpart is concerned, shall be made in accordance with § 42.110.

[Order No. 365–66, 31 FR 10265, July 29, 1966, as amended by Order No. 519–73, 38 FR 17955, July 5, 1973]

§ 42.110 Decisions and notices.

(a) *Decisions by person other than the responsible Department official.* If the hearing is held by a hearing examiner, such hearing examiner shall either make an initial decision, if so authorized, or certify the entire record, including his recommended findings and proposed decision, to the responsible Department official for a final decision, and a copy of such initial decision or certification shall be mailed to the applicant or recipient. Whenever the initial decision is made by the hearing examiner, the applicant or recipient may, within 30 days of the mailing of such notice of initial decision, file with the responsible Department official his exceptions to the initial decision, with his reasons therefor. In the absence of exceptions, the responsible Department official may on his own motion, within 45 days after the initial decision, serve on the applicant or recipient a notice that he will review the decision. Upon filing of such exceptions, or of such notice of review, the responsible Department official shall review the initial decision and issue his own decision thereon including the reasons therefor. In the absence of either exceptions or a notice of review the initial decision shall constitute the final decision of the responsible Department official.

(b) *Decisions on the record or on review by the responsible Department official.* Whenever a record is certified to the responsible Department official for decision or he reviews the decision of a hearing examiner pursuant to paragraph (a) of this section, or whenever the responsible Department official conducts the hearing, the applicant or recipient shall be given a reasonable opportunity to file with him briefs or other written statements of its contentions, and a copy of the final decision of the responsible Department official shall be given in writing to the applicant or recipient and to the complainant, if any.

(c) *Decisions on the record whenever a hearing is waived.* Whenever a hearing is waived pursuant to § 42.109(a), a decision shall be made by the responsible Department official on the record and a copy of such decision shall be given in writing to the applicant or recipient, and to the complainant, if any.

(d) *Rulings required.* Each decision of a hearing officer or responsible Department official shall set forth his ruling on each findings, conclusion, or exception presented, and shall identify the requirement or requirements imposed by or pursuant to this subpart with which it is found that the applicant or recipient has failed to comply.

(e) *Approval by Attorney General.* Any final decision of a responsible Department official (other than the Attorney General) which provides for the suspension or termination of, or the refusal to grant or continue Federal financial assistance, or the imposition of any other sanction available under this subpart or the Act, shall promptly be transmitted to the Attorney General, who may approve such decision, vacate it, or remit or mitigate any sanction imposed.

(f) *Content of orders.* The final decision may provide for suspension or termination of, or refusal to grant or continue, Federal financial assistance, in whole or in part, to which this regulation applies, and may contain such terms, conditions, and other provisions as are consistent with, and will effectuate the purposes of, the Act and this subpart, including provisions designed

to assure that no Federal financial assistance to which this regulation applies will thereafter be extended to the applicant or recipient determined by such decision to be in default in its performance of an assurance given by it pursuant to this subpart, or to have otherwise failed to comply with this subpart, unless and until, it corrects its noncompliance and satisfies the responsible Department official that it will fully comply with this subpart.

(g) *Post-termination proceedings.* (1) An applicant or recipient adversely affected by an order issued under paragraph (f) of this section shall be restored to full eligibility to receive Federal financial assistance if it satisfies the terms and conditions of that order for such eligibility or if it brings itself into compliance with this subpart and provides reasonable assurance that it will fully comply with this subpart.

(2) Any applicant or recipient adversely affected by an order entered pursuant to paragraph (f) of this section may at any time request the responsible Department official to restore fully its eligibility to receive Federal financial assistance. Any such request shall be supported by information showing that the applicant or recipient has met the requirements of paragraph (g)(1) of this section. If the responsible Department official denies any such request, the applicant or recipient may submit a request for a hearing in writing, specifying why it believes such official to have been in error. It shall thereupon be given an expeditious hearing, with a decision on the record, in accordance with rules of procedure issued by the responsible Department official. The applicant or recipient will be restored to such eligibility if it proves at such a hearing that it satisfied the requirements of paragraph (g)(1) of this section. While proceedings under this paragraph are pending, sanctions imposed by the order issued under paragraph (f) of this section shall remain in effect.

[Order No. 365–66, 31 FR 10265, July 29, 1966, as amended by Order No. 519–73, 38 FR 17956, July 5, 1973]

§42.111 Judicial review.

Action taken pursuant to section 602 of the Act is subject to judicial review as provided in section 603 of the Act.

§42.112 Effect on other regulations; forms and instructions.

(a) *Effect on other regulations.* Nothing in this subpart shall be deemed to supersede any provision of subpart A or B of this part or Executive Order 11114 or 11246, as amended, or of any other regulation or instruction which prohibits discrimination on the ground of race, color, or national origin in any program or situation to which this subpart is inapplicable, or which prohibits discrimination on any other ground.

(b) *Forms and instructions.* Each responsible Department official, other than the Attorney General or Deputy Attorney General, shall issue and promptly make available to interested persons forms and detailed instructions and procedures for effectuating this subpart as applied to programs to which this subpart applies and for which he is responsible.

(c) *Supervision and coordination.* The Attorney General may from time to time assign to officials of the Department, or to officials of other departments or agencies of the Government, with the consent of such departments or agencies, responsibilities in connection with the effectuation of the purposes of title VI of the Act and this subpart (other than responsibility for final decision as provided in §42.110(e)), including the achievement of the effective coordination and maximum uniformity within the Department and within the Executive Branch of the Government in the application of title VI of the Act and this subpart to similar programs and in similar situations. Any action taken, determination made, or requirement imposed by an official of another Department or agency acting pursuant to an assignment of responsibility under this subsection shall have the same effect as though such action had been taken by the Attorney General.

[Order No. 365–66, 31 FR 10265, July 29, 1966, as amended by Order No. 519–73, 38 FR 17956, July 5, 1973; Order No. 568–74, 39 FR 18646, May 29, 1974]

APPENDIX A TO SUBPART C OF PART 42—FEDERAL FINANCIAL ASSISTANCE ADMINISTERED BY THE DEPARTMENT OF JUSTICE TO WHICH THIS SUBPART APPLIES

NOTE: Failure to list a type of Federal assistance in appendix A shall not mean, if title VI is otherwise applicable, that a program is not covered.

1. Assistance provided by the Office of Justice Programs (OJP), the Bureau of Justice Assistance (BJA), the National Institute of Justice (NIJ), the Bureau of Justice Statistics (BJS), and the Office of Juvenile Justice and Delinquency Prevention (OJJDP), including block, formula, and discretionary grants, victim compensation payments, and victim assistance grants (title I of the Omnibus Crime Control and Safe Streets Act of 1968, 42 U.S.C. 3701–3796, as amended (Pub. L. 90–351, as amended by Pub. L. 93–83, Pub. L. 93–415, Pub. L. 94–430, Pub. L. 94–503, Pub. L. 95–115, Pub. L. 96–157, and Pub. L. 98–473); the Juvenile Justice and Delinquency Prevention Act of 1974, 42 U.S.C. 5601–5751, as amended (Pub. L. 93–415, as amended by Pub. L. 94–503, Pub. L. 95–115, Pub. L. 96–509, and Pub. L. 98–473); the Victims of Crime Act of 1984, 42 U.S.C. 10601–10604, (Pub. L. 98–473)).

2. Assistance provided by the Bureau of Prisons (BOP) including technical assistance to State and local governments for improvement of correctional systems; training of law enforcement personnel, and assistance to legal services programs (18 U.S.C. 4042).

3. Assistance provided by the National Institute of Corrections (NIC) including training, grants, and technical assistance to State and local governments, public and private agencies, educational institutions, organizations and individuals, in the area of corrections (18 U.S.C. 4351–4353).

4. Assistance provided by the Drug Enforcement Administration (DEA) including training, joint task forces, information sharing agreements, cooperative agreements, and logistical support, primarily to State and local government agencies (21 U.S.C. 871–886).

5. Assistance provided by the Community Relations Service (CRS) in the form of discretionary grants to public and private agencies under the Cuban-Haitian Entrant Program (title V of the Refugee Education Assistance Act of 1980, Pub. L. 96–422).

6. Assistance provided by the U.S. Parole Commission in the form of workshops and training programs for State and local agencies and public and private organizations (18 U.S.C. 4204).

7. Assistance provided by the Federal Bureau of Investigation (FBI) including field training, training through its National Academy, National Crime Information Center, and laboratory facilities, primarily to State and local criminal justice agencies (Omnibus Crime Control and Safe Streets Act of 1968, as amended 42 U.S.C. 3701–3796).

8. Assistance provided by the Immigration and Naturalization Service (INS) including training and services primarily to State and local governments under the Alien Status Verification Index (ASVI); and citizenship textbooks and training primarily to schools and public and private service agencies (8 U.S.C. 1360, 8 U.S.C. 1457).

9. Assistance provided by the United States Marshals Service through its Cooperative Agreement Program for improvement of State and local correctional facilities (Pub. L. 99–180, 99 Stat. 1142).

10. Assistance provided by the Attorney General through the Equitable Transfer of Forfeited Property Program (Equitable Sharing) primarily to State and local law enforcement agencies (21 U.S.C. 881(e)).

11. Assistance provided by the Department of Justice participating agencies that conduct specialized training through the National Center for State and Local Law Enforcement Training, a component of the Federal Law Enforcement Training Center (FLETC), Glenco, Georgia (Pursuant to Memorandum Agreement with the Department of Treasury).

[Order No. 1204–87, 52 FR 24449, July 1, 1987]

Subpart D—Nondiscrimination in Federally Assisted Programs—Implementation of Section 815(c)(1) of the Justice System Improvement Act of 1979

AUTHORITY: Secs. 802(a), 815(c), and 817(d) of the Justice System Improvement Act of 1979, 42 U.S.C. 3701, *et seq.*, as amended (Pub. L. 90–351, as amended by Pub. L. 93–83, Pub. L. 93–415, Pub. L. 94–503, and Pub. L. 96–157 (December 27, 1979) (JSIA) and Sec. 262 of the Juvenile Justice and Delinquency Prevention Act of 1974, as amended, 42 U.S.C. 5672 (Pub. L. 93–415, as amended by Pub. L. 95–115)).

SOURCE: 45 FR 28705, Apr. 30, 1980, unless otherwise noted.

§ 42.201 Purpose and application.

(a) The purpose of this subpart is to implement the provisions of section 815(c) of the Justice System Improvement Act of 1979 (42 U.S.C. 3789d(c); title VI of the Civil Rights Act of 1964, 42 U.S.C. 2000d; and title IX of the Education Amendments of 1972, 20 U.S.C. 1681, *et seq.*, to the end that no person in any State shall on the ground of

race, color, national origin, sex, or religion be excluded from participation in, be denied the benefits of, be subjected to discrimination under, or be denied employment in connection with any program or activity funded in whole or in part with funds made available under either the Justice System Improvement Act or the Juvenile Justice Act by the Law Enforcement Assistance Administration, the National Institute of Justice, or the Bureau of Justice Statistics. These regulations also implement Executive Order 12138, which requires all Federal agencies awarding financial assistance to take certain steps to advance women's business enterprise.

(b) The regulations in this subpart apply to the delivery of services by, and employment practices of recipients administering, participating in, or substantially benefiting from any program or activity receiving Federal financial assistance extended under the Justice System Improvement Act of 1979, or the Juvenile Justice and Delinquency Prevention Act of 1974, as amended.

(c) Where a private recipient which receives such assistance through a unit of government is engaged in prohibited discrimination, the Office of Justice Assistance, Research, and Statistics will invoke the enforcement procedures of this subpart (§ 42.208, *et seq.*) against the appropriate unit of government for failure to enforce the assurances of nondiscrimination given it by the private recipient pursuant to § 42.204(a). Where a private recipient receives assistance either directly from the Law Enforcement Assistance Administration, the National Institute of Justice, or the Bureau of Justice Statistics or through another private entity which receives funds directly from one of those agencies, compliance will be enforced pursuant to section 803(a) of the Justice System Improvement Act.

§ 42.202 Definitions.

(a) *JSIA* means the Justice System Improvement Act of 1979, Public Law 96–157, 42 U.S.C. 3701, *et seq.*

(b) *Juvenile Justice Act* means title I and II of the Juvenile Justice and Delinquency Prevention Act of 1974, Public Law 93–415, as amended by Public Law 94–503 and Public Law 95–115.

(c) *OJARS* or *Office* means the Office of Justice Assistance, Research, and Statistics.

(d) *LEAA* means the Law Enforcement Assistance Administration.

(e) *NIJ* means the National Institute of Justice.

(f) *BJS* means the Bureau of Justice Statistics.

(g) *Employment practices* means all terms and conditions of employment including but not limited to, all practices relating to the screening, recruitment, referral, selection, training, appointment, promotion, demotion, and assignment of personnel, and includes advertising, hiring, assignments, classification, discipline, layoff and termination, upgrading, transfer, leave practices, rate of pay, fringe benefits, or other forms of pay or credit for services rendered and use of facilities.

(h) *Investigation* includes fact-finding efforts and, pursuant to § 42.205(c)(3), attempts to secure the voluntary resolution of complaints.

(i) *Compliance review* means a review of a recipient's selected employment practices or delivery of services for compliance with the provisions of section 815(c)(1) of the Justice System Improvement Act, or this subpart.

(j) *Noncompliance* means the failure of a recipient to comply with section 815(c)(1) of the Justice System Improvement Act, or this subpart.

(k) *Program or activity* means the operation of the agency or organizational unit of government receiving or substantially benefiting from financial assistance awarded, e.g., a police department or department of corrections.

(l) *Pattern or practice* means any procedure, custom, or act affecting or potentially affecting, more than a single individual in a single or isolated instance.

(m) *Religion* includes all aspects of religious observance and practice as well as belief.

(n) *Recipient* means any State or local unit of government or agency thereof, and any private entity, institution, or organization, to which Federal financial assistance is extended directly, or through such government or agency, but such term does not include any ultimate beneficiary of such assistance.

(o) *State* means any State of the United States, the District of Columbia, the Commonwealth of Puerto Rico, the Virgin Islands, Guam, American Samoa, the Trust Territory of the Pacific Islands, and the Commonwealth of the Northern Mariana Islands;

(p) *Unit of local government* means any city, county, township, town, borough, parish, village or other general purpose political subdivision of a State, an Indian tribe which performs law enforcement functions as determined by the Secretary of the Interior, or, for the purpose of assistance eligiblity, any agency of the District of Columbia government or the U.S. Government performing law enforcement functions in and for the District of Columbia;

(q) *Combination* as applied to States or units of local government means any grouping or joining together of such States or units for the purpose of preparing, developing, or implementing a criminal justice program or project;

(r) *Criminal justice council* or *CJC* means the agency designated by a State to perform the functions listed in section 402(b)(1) of the Justice System Improvement Act.

(s) All masculine terms such as *he, his*, and *him* should be construed to mean their respective feminine counterparts, *she, hers*, and *her*, where appropriate.

[45 FR 28705, Apr. 30, 1980; 45 FR 54037, Aug. 14, 1980]

§ 42.203 Discrimination prohibited.

(a) No person in any State shall on the ground of race, color, religion, national origin, or sex be excluded from participation in, be denied the benefits of, be subjected to discrimination under, or denied employment in connection with any program or activity funded in whole or in part with funds made available under the JSIA or the Juvenile Justice Act.

(b) A recipient may not, directly or through contractual or other arrangements, on the grounds set forth in paragraph (a) of this section:

(1) Deny an individual any disposition, service, financial aid, or benefit provided under the program;

(2) Provide any disposition, service, financial aid, or benefit to an individual which is different, or is provided in a different manner, from that provided to others under the program;

(3) Subject an individual to segregation or separate treatment in any matter related to his receipt of any disposition, service, financial aid, or benefit under the program;

(4) Restrict an individual in any way in the enjoyment of any advantage or privilege enjoyed by others receiving any disposition, service, or financial aid or benefit under the program;

(5) Treat an individual differently from others in determining whether he satisfies any admission, enrollment, quota, eligibility, membership, or other requirement or condition which individuals must meet in order to be provided any disposition, service, financial aid, function, or benefit provided under the program;

(6) Deny an individual an opportunity to participate in the program through the provision of services or otherwise or afford him an opportunity to do so which is different from that afforded others under the program;

(7) Deny a person the opportunity to participate as a member of a planning or advisory body which is an integral part of the program;

(8) Subject any individual to physical abuse or summary punishment, or deny any individual the rights guaranteed by the Constitution to all persons;

(9) Subject any individual to discrimination in its employment practices in connection with any program or activity funded in whole or in part with funds made available under the JSIA or the Juvenile Justice Act;

(10) Use any selection device in a manner which is inconsistent with the Department of Justice Uniform on Employee Selection Guidelines, 28 CFR 50.14.

(c) In matters involving employment discrimination, section 815(c)(1) of the JSIA shall be interpreted by the Office consistently with title VII of the Civil Rights Act of 1964, Public Law 88–352, 79 Stat. 253, as amended by the Equal Employment Opportunity Act of 1972, Public Law 92–261, 87 Stat. 103, and the Pregnancy Discrimination Act, Public Law 95–555, 92 Stat. 2076.

(d) The use of a minimum height or weight requirement which operates to disproportionately exclude women and

persons of certain national origins, such as persons of Hispanic or Asian descent, is a violation of this subpart, unless the recipient is able to demonstrate convincingly, through use of supportive factual data, that the requirement has been validated as set forth in the Department of Justice Guidelines on Employee Selection Procedures, 28 CFR 50.14.

(e) A recipient, in determining the type of disposition, services, financial aid, benefits, or facilities which will be provided under any program, or the class of individuals to whom, or the situations in which, such will be provided under any program, may not directly or through contractual or other arrangements, utilize criteria or methods of administration which have the effect of subjecting individuals to discrimination under section 815(c)(1) of the JSIA, or have the effect of defeating or substantially impairing accomplishment of the objectives of the program as respects individuals of a particular race, color, sex, national origin, or religion.

(f) In determining the site or location of facilities, a recipient or applicant may not make selections with the purpose or effect of excluding individuals from, denying them the benefits of, subjecting them to discrimination under, or denying them employment in connection with any program or activity to which this subpart applies; or with the purpose or effect of defeating or substantially impairing the accomplishment of the objectives of the JSIA, the Juvenile Justice Act, or this subpart.

(g) For the purposes of this section, the disposition, services, financial aid, or benefits provided under a program or activity receiving Federal financial assistance shall be deemed to include any portion of any program or function or activity conducted by any recipient of Federal financial assistance which program, function, or activity is directly or indirectly improved, enhanced, enlarged, or benefited by such Federal financial assistance or which makes use of any facility, equipment, or property provided with the aid of Federal financial assistance.

(h) The enumeration of specific forms of prohibited discrimination in paragraphs (b) through (g) of this section does not limit the generality of the prohibition in paragraph (a) of this section.

(i)(1) In administering a program regarding which the recipient has previously discriminated against persons on the ground of race, color, religion, national origin, or sex, the recipient must take affirmative action to overcome the effects of prior discrimination.

(2) Even in the absence of such prior discrimination, a recipient in administering a program may take affirmative action to overcome the effects of conditions which resulted in limiting participation by persons of a particular race, color, religion, national origin, or sex.

(j) Nothing contained in this subpart shall be construed as requiring any recipient to adopt a percentage ratio, quota system, or other program to achieve racial balance. The use of goals and timetables is not use of a quota prohibited by this section.

[45 FR 28705, Apr. 30, 1980, as amended at 45 FR 54036, Aug. 14, 1980]

§ 42.204 Applicants' obligations.

(a) Every application for Federal financial assistance to which this subpart applies shall, as a condition of approval of such application and the extension of any Federal financial assistance pursuant to such application, contain or be accompanied by an assurance that the applicant will comply with all applicable nondiscrimination requirements and will obtain such assurances from its subgrantees, contractors, or subcontractors to which this subpart applies, as a condition of the extension of Federal financial assistance to them.

(b) Every unit of State or local government and every agency of such unit that applies for a grant of $500,000 or more under the JSIA or the Juvenile Justice Act, must submit a copy of its current Equal Employment Opportunity Program (if required to develop one under 28 CFR 42.301, *et. seq.*) to OJARS at the same time it submits its grant application. No application for $500,000 or more will be approved until OJARS has approved the applicant's EEOP.

(c) Every application for Federal financial assistance from a State or local unit of government or agency thereof shall contain an assurance that in the event a Federal or State court or Federal or State administrative agency makes a finding of discrimination after a due process hearing, on the ground of race, color, religion, national origin, or sex against the recipient State or local government unit, or agency, the recipient will forward a copy of the finding to the appropriate CJC and to OJARS.

[45 FR 28705, Apr. 30, 1980, as amended at 45 FR 54037, Aug. 14, 1980]

§ 42.205 Complaint investigation.

(a) The Office shall investigate complaints filed by or on behalf of an individual claiming to be aggrieved, that allege a violation of section 815(c)(1) of the JSIA, or this subpart.

(b) No complaint will be investigated if it is received more than one year after the date of the alleged discrimination, unless the time for filing is extended by the Director of OJARS for good cause shown.

(c) The Office shall conduct investigations of complaints as follows:

(1) Within 21 days of receipt of a complaint, the Office shall:

(i) Ascertain whether it had jurisdiction under paragraphs (a) and (b) of this section;

(ii) If jurisdiction is found, notify the recipient alleged to be discriminating of its receipt of the complaint; and

(iii) Initiate the investigation.

(2) The investigation will ordinarily be initiated by a letter requesting data pertinent to the complaint and advising the recipient of:

(i) The nature of the complaint, and, with the written consent of the complainant, the identity of the complainant;

(ii) The programs or activities affected by the complaint;

(iii) The opportunity to make, at any time prior to receipt of the Office's preliminary findings, a documentary submission, responding to, rebutting, or denying the allegations made in the complaint; and

(iv) The schedule under which the complaint will be investigated and a determination of compliance or non-compliance made.

Copies of this letter will also be sent to the chief executive of the appropriate unit(s) of government, and to the appropriate CJC.

(3) Within 150 days or, where an on-site investigation is required, within 175 days after the initiation of the investigation, the Office shall advise the complainant, the recipient, the chief executive(s) of the appropriate unit(s) of government, and the appropriate CJC of:

(i) Its investigative findings;

(ii) Where appropriate, its recommendations for compliance; and

(iii) If it is likely that satisfactory resolution of the complaint can be obtained, the recipient's opportunity to request the Office to engage in voluntary compliance negotiations prior to the Director of OJARS' determination of compliance or non-compliance.

(4) If, within 30 days, the Office's recommendations for compliance are not met, or voluntary compliance is not secured, the matter will be forwarded to the Director of OJARS for a determination of compliance or non-compliance. The determination shall be made no later than 14 days after the conclusion of the 30-day period. If the Director makes a determination of non-compliance with section 815(c)(1) of the JSIA, the Office shall institute administrative proceedings pursuant to § 42.208 *et seq*.

(5) If the complainant or another party, other than the Attorney General, has filed suit in Federal or State court alleging the same discrimination alleged in a complaint to OJARS, and, during OJARS' investigation, the trial of that suit would be in progress, OJARS will suspend its investigation and monitor the litigation through the court docket and, where necessary, contacts with the complainant. Upon receipt of notice that the court has made a finding of a pattern or practice of discrimination within the meaning of § 42.208, the Office will institute administrative proceedings pursuant to § 42.208, *et seq*. Upon receipt of notice that the court has made a finding affecting only the complainant, the Office will adopt the findings of the court as its investigative findings pursuant to § 42.205(c)(3).

(6) The time limits listed in paragraphs (c)(1) through (c)(5) of this section shall be appropriately adjusted where OJARS requests another Federal agency or another branch of the Department of Justice to act on the complaint. OJARS will monitor the progress of the matter through liaison with the other agency. Where the request to act does not result in timely resolution of the matter, OJARS will institute appropriate proceedings pursuant to this section.

[45 FR 28705, Apr. 30, 1980; 45 FR 54037, Aug. 14, 1980]

§ 42.206 Compliance reviews.

(a) The Office shall periodically conduct:

(1) Pre-award compliance reviews of all applicants requesting a grant from LEAA, NIJ, or BJS for $500,000 or more; and

(2) Post-award compliance reviews of selected recipients of LEAA, NIJ, or BJS assistance.

(b) *Pre-award reviews.* The Office shall review selected formula, discretionary, and national priority applications for $500,000 or more in order to determine whether the application presents a possibility of discrimination in the services to be performed under the grant, or in the employment practices of the applicant. In those instances where it finds such a possibility, the Office shall special condition, disapprove or take other action with respect to the application to assure that the project complies with section 815(c)(1) of the JSIA.

(c) *Post-award reviews.* The Office shall seek to review those recipients which appear to have the most serious equal employment opportunity problems, or the greatest disparity in the delivery of services to the minority and non-minority or male and female communities they serve. Selection for review shall be made on the basis of:

(1) The relative disparity between the percentage of minorities, or women, in the relevant labor market, and the percentage of minorities, or women, employed by the recipient;

(2) The percentage of women and minorities in the population receiving program benefits;

(3) The number and nature of discrimination complaints filed against a recipient with OJARS or other Federal agencies;

(4) The scope of the problems revealed by an investigation commenced on the basis of a complaint filed with the Office against a recipient or by a pre-award compliance review; and

(5) The amount of assistance provided to the recipient.

(d) Within 15 days after selection of a recipient for review, the Office shall inform the recipient that it has been selected and will initiate the review. The review will ordinarily be initiated by a letter requesting data pertinent to the review and advising the recipient of:

(1) The practices to be reviewed;

(2) The programs or activities affected by the review;

(3) The opportunity to make, at any time prior to receipt of the Office's investigative findings, a documentary submission responding to the Office, explaining, validating, or otherwise addressing the practices under review; and

(4) The schedule under which the review will be conducted and a determination of compliance or non-compliance made.

Copies of this letter will also be sent to the chief executive of the appropriate unit(s) of government, and to the appropriate CJC.

(e) Within 150 days or, where an onsite investigation is required, within 175 days after the initiation of the review, the Office shall advise the recipient, the chief executive(s) of the appropriate unit(s) of government, and the appropriate CJC, of:

(1) Its investigative findings;

(2) Where appropriate, its recommendations for compliance; and

(3) The opportunity to request the Office to engage in voluntary compliance negotiations prior to the Director of OJARS' determination of compliance or noncompliance.

(f) If, within 30 days, the Office's recommendations for compliance are not met, or voluntary compliance is not secured, the Director of OJARS shall make a determination of compliance or non-compliance. The determination shall be made no later than 14 days after the conclusion of the 30-day negotiation period. If the Director makes a determination of non-compliance with

section 815(c) of the JSIA, the Office shall institute administrative proceedings pursuant to § 42.208, *et seq*.

[45 FR 28705, Apr. 30, 1980; 45 FR 54037, Aug. 14, 1980]

§ 42.207 Compliance information.

(a) Each recipient shall:

(1) Keep such records, and submit to OJARS such timely, complete, and accurate information as OJARS may request to determine whether the recipient is complying with section 815(c)(1) of the JSIA; and

(2) Permit reasonable access by OJARS to its books, documents, papers, and records, to the extent necessary to determine whether the recipient is complying with section 815(c)(1) of the JSIA.

(b) Failure to comply with § 42.207(a) shall subject the recipient to the sanctions provided in section 803(a) of the JSIA, 42 U.S.C. 3783(a).

§ 42.208 Notice of noncompliance.

(a) Whenever the Office has:

(1) Received notice of a finding, after notice and opportunity for a hearing by:

(i) A Federal court (other than in an action brought by the Attorney General under section 815(c)(3) of the JSIA);

(ii) A State court; or

(iii) A Federal or State administrative agency (other than the Office under paragraph (a)(2) of this section); to the effect that there has been a pattern or practice of discrimination in violation of section 815(c)(1) of the JSIA; or

(2) Made a determination after an investigation by the Office pursuant to § 42.205 or § 42.206 of this subpart that a State government or unit of general local government, or agency thereof, is not in compliance with this subpart, or section 815(c)(1) of the JSIA, or this subpart: the Office shall, within 10 days after such occurrence, notify the chief executive of the affected State and, if the action involves a unit of general local government, the chief executive of such unit of general local government, that such program or activity has been so found or determined not to be in compliance with this subpart or section 815(c)(1) of the JSIA or this subpart, and shall request each chief executive notified under this section with respect to such violation to secure compliance.

(b) For the purposes of this section, notice means:

(1) Publication in—

(i) Employment Practices Decisions, Commerce Clearinghouse, Inc.;

(ii) Fair Employment Practices, Bureau of National Affairs, Inc.;

(iii) The United States Law Week, Bureau of National Affairs, Inc.; or

(iv) Federal Supplement, Federal Reporter, or Supreme Reporter, West Publishing Company; or

(2) Receipt by the Office of a reliable copy of a pattern or practice finding, made after a due process hearing from any source.

(c) When the Office receives notice of a finding which has been made more than 120 days prior to receipt, the Office will determine if the finding is currently applicable.

(1) In determining the current applicability of the finding, the Office will contact the clerk of the court and the office of the deciding judge (or the appropriate agency official) to determine whether any subsequent orders have been entered.

(2) If the information is unavailable through the clerk or the office of the judge (or the appropriate agency official), the Office will contact the attorneys of record for both the plaintiff and defendant to determine whether any subsequent orders have been entered, or if the recipient is in compliance.

(3) If, within 10 days of receipt of notice, it is not determined through the procedures set forth in paragraphs (c)(1) and (2) of this section, that the recipient is in full compliance with a final order of the court (or agency) within the meaning of § 42.211(b), the Office will notify the appropriate chief executive of the recipient's noncompliance as provided in § 42.208(a).

(d) For purposes of paragraph (a)(1)(iii) of this section a finding by a Federal or State administrative agency shall be deemed rendered after notice and opportunity for a hearing if it is rendered pursuant to procedures consistent with the provisions of subchapter II of chapter 5, title 5, U.S.

Code (the Administrative Procedures Act).

(e) The procedures of a Federal or State administrative agency shall be deemed to be consistent with the Administrative Procedure Act (APA) if:

(1) The agency gives all interested parties opportunity for—

(i) The submission and consideration of facts, arguments, offers of settlement, or proposals of adjustment when time, the nature of the proceeding, and the public interest permit; and

(ii) Hearing on notice, and a decision by an individual who did not participate in the investigation or prosecution of the matter.

(2) A party is entitled to be represented by counsel or other qualified representative, to present his case or defense by oral or documentary evidence, to submit rebuttal evidence, and to conduct such cross-examination as may be required for a full and true disclosure of the facts; and

(3) The record shows the ruling on each finding, conclusion, or exception presented. All decisions, including initial recommended, and tentative decisions, shall be a part of the record and shall include a statement of—

(i) Findings and conclusions, and the reasons or basis therefor, on all the material issues of fact, law, or discretion presented on the record; and

(ii) The appropriate rule, order, sanction, relief, or definal thereof.

(f) If within 10 days of receipt of notice the Office cannot determine whether the finding was rendered pursuant to procedures consistent with the APA, it shall presume the APA procedures were applied, and send notification under § 42.208(a) to the appropriate chief executive(s).

(g) Each notification under § 42.208(a) shall advise the appropriate chief executive of:

(1) The program or activity determined to be in noncompliance;

(2) The general legal and factual basis for its determination;

(3) The Office's request to secure compliance;

(4) The action to be taken by the Office and the provisions of law under which the proposed action is to be taken should the chief executive fail to secure compliance; and

(5) The right of the recipient to request a preliminary hearing, pursuant to § 42.212, and a full hearing, pursuant to § 42.213.

§ 42.209 Compliance secured.

(a) In the event a chief executive secures compliance after notice pursuant to § 42.208, the terms and conditions with which the affected State government or unit of general local government agrees to comply shall be set forth in writing and signed by the chief executive of the State, by the chief executive of such unit (in the event of a violation by a unit of general local government), and by the Director of OJARS.

(b) Prior to the effective date of the agreement, the Office shall send a copy of the agreement to each complainant, if any, with respect to such violation, and to the appropriate CJC.

(c) The chief executive of the State, or the chief executive of the unit (in the event of a violation by a unit of general local government) shall file semi-annual reports with the Office detailing the steps taken to comply with the agreement.

(d) Within 15 days of receipt of such reports, the Office shall send a copy to each complainant, if any.

(e) The Director of OJARS shall also determine a recipient to be in compliance if it complies fully with the final order or judgement of a Federal or State court, pursuant to § 42.211 (a)(2) and (b), or if found by such court to be in compliance with section 815(c)(1).

§ 42.210 Compliance not secured.

(a) If, at the conclusion of 90 days after notification of noncompliance with section 815(c)(1):

(1) Compliance has not been secured by the chief executive of that State or the chief executive of that unit of general local government; and

(2) An administrative law judge has not made a determination under § 42.212 that it is likely the State government or unit of local government will prevail on the merits;

the Office shall notify the Attorney General that compliance has not been secured and shall cause to have suspended further payment of any funds under the JSIA or Juvenile Justice

Act, as appropriate, to the specific program or activity in which the noncompliance has been found.

(b) If a hearing is requested pursuant to § 42.213, the suspension of funds shall be effective for a period of not more than 30 days after the conclusion of the hearing, or in the absence of a hearing under § 42.213, funds shall be suspended for not more than 120 days, unless there has been an express finding by the Director of OJARS after notice and opportunity for such a hearing, that the recipient is not in compliance with section 815(c)(1) of the JSIA, or this subpart.

§ 42.211 Resumption of suspended funds.

(a) Payment of suspended funds made available under the JSIA or the Juvenile Justice Act shall resume only if—

(1) Such State government or unit of general local government enters into a compliance agreement signed by the Director of OJARS in accordance with § 42.209;

(2) Such State government or unit of general local government:

(i) Complies fully with the final order or judgment of a Federal or State court, if that order or judgement covers all matters raised by the Director of OJARS in the notice pursuant to § 42.208, or

(ii) Is found to be in compliance with section 815(c)(1) of the JSIA by such court;

(3) After a hearing, the Director of OJARS, pursuant to § 42.213, finds that noncompliance has not been demonstrated; or

(4) An administrative law judge has determined, under § 42.212, that it is likely that the State government or unit of local government will prevail on the merits.

(b) Full compliance with a court order, for the purposes of paragraph (2) of this section, includes the securing of an agreement to comply over a period of time, particularly in complex cases or where compliance would require an extended period of time for implementation.

§ 42.212 Preliminary hearing.

(a) Prior to the suspension of funds under § 42.210(a), but within the 90-day period after notification under § 42.208, the State government or unit of local government may request an expedited preliminary hearing on the record in accordance with 5 U.S.C. 554 in order to determine whether it is likely that the State government or unit of local government would, at a full hearing under § 42.213, prevail on the merits on the issue of the alleged noncompliance.

(b) The preliminary hearing shall be initiated within 30 days of request. The ALJ shall make his finding within 15 days after the conclusion of the preliminary hearing.

§ 42.213 Full hearing.

(a) At any time after notification of noncompliance under § 42.208, but before the conclusion of the 120-day suspension period referred to in § 42.210, a State government or unit of general local government may request a hearing on the record in accordance with 5 U.S.C. 554 in order to contest the findings of determination of noncompliance made under § 42.208. The Office shall initiate the hearing within 60 days of request.

(b) Within 30 days after the conclusion of the hearing, or, in the absence of a hearing, at the conclusion of the 120-day period referred to in § 42.210, the Director of OJARS shall make a finding of compliance or noncompliance.

(1) If the Director makes a finding of noncompliance, the Director shall:

(i) Notify the Attorney General in order that the Attorney General may institute a civil action under section 815(c)(3) of the JSIA;

(ii) Cause to have terminated the payment of funds under the JSIA and/or the Juvenile Justice Act; and

(iii) If appropriate, seek repayment of funds.

(2) If the Director makes a finding of compliance, payment of the suspended funds and reconsideration of applications shall resume.

§ 42.214 Judicial review.

Any State government or unit of general local government aggrieved by a final determination of the Office under § 42.213 may appeal such determination as provided in section 805 of the JSIA.

§ 42.215 Other actions authorized under the JSIA.

(a) The Director of OJARS may, at any time, request the Attorney General to file suit to enforce compliance with section 815(c)(1). OJARS will monitor the litigation through the court docket and liaison with the Civil Rights Division of the Department of Justice. Where the litigation does not result in timely resolution of the matter, and funds have not been suspended pursuant to § 42.215(b), OJARS will institute administrative proceedings unless enjoined from doing so by the court.

(b)(1) Whenever the Attorney General files a civil action alleging a pattern or practice of discriminatory conduct on the basis of race, color, religion, national origin, or sex in any program or activity of a State government or unit of local government which State government or unit of local government receives funds made available under the JSIA or the Juvenile Justice Act and the conduct allegedly violates or would violate the provisions of this subpart or section 815(c)(1) of the JSIA and neither party within 45 days after such filing has been granted such preliminary relief with regard to the suspension or payment of funds as may otherwise be available by law, the Director of OJARS shall suspend further payment of any funds under the JSIA and the Juvenile Justice Act to that specific program or activity alleged by the Attorney General to be in violation of the provisions of section 815(c)(1) of the JSIA until such time as the court orders resumption of payment.

(2) The Office expects that preliminary relief authorized by this subsection will not be granted unless the party making application for such relief meets the standards for a preliminary injunction.

(c)(1) Whenever a State government or unit of local government or any officer or employee thereof acting in an official capacity, has engaged or is engaging in any act or practice prohibited by section 815(c)(1) of the JSIA, a civil action may be instituted after exhaustion of administrative remedies by the person aggrieved in an appropriate U.S. District Court or in a State court or general jurisdiction.

(2) Administrative remedies shall be deemed to be exhausted upon the expiration of 60 days after the date the administrative complaint was filed with the Office or any other administrative enforcement agency, unless within such period there has been a determination by the Office or the agency on the merits of the complaint, in which case such remedies shall be deemed exhausted at the time the determination becomes final.

(3) The Attorney General, or a specifically designated assistant for or in the name of the United States may intervene upon timely application in any civil action brought to enforce compliance with section 815(c)(1) of the JSIA if he certifies that the action is of general public importance. In such action the United States shall be entitled to the same relief as if it had instituted the action.

APPENDIX A TO SUBPART D OF PART 42—COMMENTARY

Section 42.201(c). The compliance enforcement mechanism of section 815(c)(2) applies by its terms to State and local government. The prohibitions in section 815(c)(1), however, apply to all recipients of OJARS assistance. Accordingly, where a private entity which has received LEAA, NIJ, or BJS assistance through a State or local unit of government is determined by OJARS to be in non-compliance, OJARS will invoke the section 815(c)(2) mechanism against the appropriate unit of government for its failure to enforce the assurances of compliance given it by the private recipient, unless the unit has initiated its own compliance action against the private recipient. The fund termination procedures of section 803(a) will be invoked against non-complying private recipients which receive assistance directly from LEAA, NIJ, or BJS, or through another private entity.

Section 42.202(g). Section 815(c)(1) of the JSIA limits suspension and termination of assistance in the event of noncompliance to the ''programs or activity'' in which the noncompliance is found. The phrase ''program or activity'' was first used in section 815(c)(1) of the Crime Control Act of 1976, the substantially identical predecessor to section 815(c)(1).

House Report No. 94–1155 (94th Congress, 2d Session), at p. 26, explained the provision as follows:

''Suspension may be limited to the specific program or activity found to have discriminated, rather than all of the recipients' LEAA funds.

''For example, if discriminatory employment practices in a city's police department were cited in the notification, LEAA may only suspend that part of the city's payments which fund the police department. LEAA may not suspend the city's LEAA funds which are used in the city courts, prisons, or juvenile justice agencies.''

This passage makes it clear that OJARS need not demonstrate a nexus between the particular project funded and the discriminatory activity. See *Lau* v. *Nichols,* 414 U.S. 563, 566 (1974).

Sections 42.203(b) and 42.203(e–i). These provisions are derived from 28 CFR 42.104(b) of subpart C of the Department of Justice Nondiscrimination Regulations. Where appropriate ''sex'' and ''religion'' have been added as prohibited grounds of discrimination, and ''denial of employment'' as another activity within the scope of section 815(c)(1).

Individual projects benefiting a particular sex, race, or ethnic group are not violative of section 815(c)(1) unless the granting agency or the recipient has engaged in a pattern of granting preferential treatment to one such group, and cannot justify the preference on the basis of a compelling governmental interest, in the case of racial or ethnic discrimination, or a substantial relationship to an important governmental function, in the case of sex discrimination.

Section 42.203(b)(10). On August 25, 1978, the Department of Justice, the Equal Employment Opportunity Commission, the Department of Labor and the then-Civil Service Commission published the Uniform Employee Selection Guidelines codified at 28 CFR 50.14. Since OJARS is a component of the Department, these guidelines are applicable to the selection procedures of LEAA, NIJ, and BJS recipients. See 44 FR 11996 (March 2, 1979) for a detailed commentary on the guidelines.

Section 42.203(c). In the Conference Report on section 518(c) of the Crime Control Act (the substantially identical predecessor of section 815(c)), the managers stated that ''In the area of employment cases brought under this section, it is intended by the conferees that the standards of title VII of the Civil Rights Act of 1964 apply.'' H. Rept. No. 94–1723 (94th Cong., 2d Sess.) at p. 32.

This section makes the OJARS standards of employment discrimination consistent with those used by the Civil Rights Division of the Department of Justice. It further clarifies that the burden shifts to the employer to validate its selection procedures once OJARS has demonstrated that those procedures disproportionately exclude an affected class. Discriminatory purpose on the part of the employer, which must be shown before the burden shifts in a Fourteenth Amendment case such as *Washington* v. *Davis,* 426 U.S. 229, 96 S. Ct. 2040 (1976), need not be shown in an employment discrimination case brought under section 815(c)(1).

Section 42.203(j). Section 815(b) of the JSIA reads:

''Notwithstanding any other provision of law, nothing contained in this title shall be construed to authorize the National Institute of Justice, the Bureau of Justice Statistics, or the Law Enforcement Assistance Administration (1) to require, or condition the availability or amount of a grant upon the adoption by an applicant or grantee under this title of a percentage ratio, quota system, or other program to achieve racial balance in any criminal justice agency; or (2) to deny or discontinue a grant because of the refusal of an applicant or grantee under this title to adopt such a ratio, system, or other program.''

In commenting on the Crime Control Act of 1976, Senator Roman Hruska of Nebraska explained the difference between quotas and goals and timetables as follows:

''Section 518(b) [now 815(b)] of the act prohibits the setting of quotas. This provision was unchanged, and this provision will still bind the Administration.

''LEAA does have an affirmative obligation under this law to seek to eliminate discriminatory practices, voluntarily, if possible, prior to resorting to fund termination. LEAA can request that a recipient eliminate the effect of past discrimination by requiring the recipient to commit itself to goals and timetables. The formulation of goals is not a quota prohibited by section 518(b) of the act. A goal is a numerical objective fixed realistically in terms of the number of vacancies expected and the number of qualified applicants available. Factors such as a lower attrition rate than expected, bona fide fiscal restraints, or a lack of qualified applicants would be acceptable reasons for not meeting a goal that has been established and no sanctions would accrue under the program.'' Cong. Rec. S 17320 (September 30, 1976, daily ed.).

The Senate Judiciary Committee Report on the JSIA also emphasized that section 815(b) does not ''undercut subsection (c) in any way; subsection (b) has been interpreted so as not to limit LEAA's anti-discrimination enforcement capabilities. Indeed, recent court decisions have made this abundantly clear. See, e.g., *United States* v. *City of Los Angeles,* No. 77–3460 (C.D. Cal. 2/1/79).'' S. Rept. 96–142, p. 57.

See also the Equal Employment Opportunity Commission Affirmative Action Guidelines, 44 FR 4422 (January 19, 1979).

Section 42.204. All grantees and subgrantees must make the assurances found in paragraph (a). Only State and local units of government and agencies thereof must make the assurance found in paragraph (c), since, as explained in the commentary on §42.201(c), the enforcement provisions of section

815(c)(2) apply only to governmental recipients.

Section 42.205(a). Where information available to the Office clearly and convincingly demonstrates that the complaint is frivolous or otherwise without merit, the complaint will not be investigated, and the complainant will be so advised.

Section 42.205(b). A one-year timeliness requirement is imposed to ensure that OJARS will be devoting its resources to the resolution of active issues, and to maximize the possibility that necessary witnesses and evidence are still available.

Examples of good cause which would clearly warrant an extension of the filing period are a statement from the complainant stating that he or she was unware of the discrimination until after a year had passed, or that he or she was not aware that a remedy was available through OJARS.

Section 42.205(c)(1). Jurisdiction exists if the complaint alleges discrimination on a ground prohibited by section 815(c)(1), if the recipient was receiving funds at the time of the discrimination, and the respondent named in the complaint is a current recipient of LEAA, NIJ, or BJS assistance.

Prior to a determination of noncompliance, OJARS will attempt to negotiate voluntary compliance only during the 30-day period following receipt of the Office's preliminary findings, and only at the request of the recipient, as provided in § 42.205(c)(3). If a determination of noncompliance is made, OJARS will participate in voluntary compliance efforts during the 90-day period following the letter sent to the chief executive(s) under section 42.208.

Sections 42.205(c) (3) and (4) and 42.206(e). OJARS will notify the appropriate chief executive(s) of its recommendations during the voluntary resolution phase of both the complaint investigation and compliance review process. OJARS expects that the early involvement of the chief executive will often expedite the resolution of issues.

Section 42.205(c)(5). OJARS will initiate an investigation if the litigation discussed in this subparagraph becomes protracted or apparently will not resolve the matter within a reasonable time.

Section 42.205(c)(6). In order to effectively utilize the resources of other agencies, and to avoid duplication of effort, OJARS may request another agency to act on a particular complaint. OJARS expects this practice to be limited, and will attempt to ensure that any cooperative agreement reached with another agency is consistent with the timetables set forth in § 42.205(c).

Section 42.206(a). OJARS recognizes the practical impossibility of reviewing the compliance of each of its more than 39,000 recipients. The regulations seek to expedite the review process by reducing its length and narrowing its focus. Compliance reviews may, in some instances, be limited to specific employment practices, or other functions of a recipient, that appear to have the greatest adverse impact on an affected class.

Section 42.206(b). The factors listed will be considered cumulatively by OJARS in selecting recipients for reviews. OJARS will consider data from all sources, including information provided by both internal and external auditors.

Section 42.208(b). Upon receipt of the publications listed, OJARS will review the case reports for findings that may be violations of section 815(c)(1). In the case of the West Publishing Company reporters, OJARS will consult the topic ''Civil Rights'' in the Key Number Digests contained in the advance sheets.

Section 42.208(e). This subsection sets forth the minimum procedural safeguards that OJARS would require of an administrative hearing to assure the process was consistent with the Administrative Procedure Act. The sufficiency of other procedures that may vary in form but insure due process and the same opportunity for a fair hearing of both parties' evidence will be determined by OJARS on a case-by-case basis.

The Office will compile a list of State agencies whose procedures have been found consistent with the Administrative Procedure Act, and a list of State agencies whose procedures have been found inconsistent. When a finding of an agency not on either list is received, the Office will attempt to reliably determine the procedures used to render the findings.

Section 42.209(a). Although the signature of the appropriate chief executives are ultimately required on the compliance agreement, these regulations do not preclude them from delegating the responsibility for securing compliance during the 90-day period following notification, to State or local administrative or human rights agencies under their respective authority. A compliance agreement may be an agreement to comply over a period of time, particularly in complex cases or where compliance would require an extended period of time for implementation.

Section 42.209(b). The regulations require that a copy of the proposed compliance agreement be sent to the complainant, if any, before the effective date of the agreement. Although the Act would permit a copy to be sent as late as the effective date, OJARS believes the compliance agreement would be more likely to resolve all concerns and discourage litigation if the complainant's views were considered before it took effect.

Section 42.211(b). An example of a case where compliance would require an extended period of time for implementation would be a court order setting a goal of five years for

an employer to raise the percentage of minorities in its workforce to parity with the percentage of minorities in the relevant geographical labor force.

Section 42.213. The full hearing will be conducted in accordance with JSIA Hearing and Appeal Procedures, 28 CFR 18.1, *et seq.*

Section 42.215(a). In a December 20, 1976 letter to the Administrator of LEAA, Congressman Peter Rodino, Chairman of the House Judiciary Committee, commented on the regulations proposed to implement the substantially identical nondiscrimination provisions of the Crime Control Act. He advised the Administrator that ''the committee intentionally omitted the word 'refer' from the law to ensure that LEAA would always retain administrative jurisdiction over a complaint filed with them. It is not appropriate for LEAA to refer cases to the Civil Rights Division or other Federal or State agencies without monitoring the case for prompt resolution.''

Section 42.215(c)(2). The exhaustion of administrative remedies at the end of 60 days (unless the Office has made a determination) does not limit OJARS' authority to investigate a complaint after the expiration of that period. OJARS will continue to investigate the complaint after the end of the 60-day period, if necessary, in accordance with the provisions of § 42.205.

Subpart E—Equal Employment Opportunity Program Guidelines

AUTHORITY: Sec. 501 of the Omnibus Crime Control and Safe Streets Act of 1968, Pub. L. 90–351, 82 Stat. 197, as amended.

SOURCE: 43 FR 28802, June 30, 1978, unless otherwise noted.

§ 42.301 Purpose.

The experience of the Law Enforcement Assistance Administration in implementing its responsibilities under the Omnibus Crime Control and Safe Streets Act of 1968, as amended (Pub. L. 90–351, 82 Stat. 197; Pub. L. 91–644, 84 Stat. 1881) has demonstrated that the full and equal participation of women and minority individuals in employment opportunities in the criminal justice system is a necessary component to the Safe Streets Act's program to reduce crime and delinquency in the United States.

§ 42.302 Application.

(a) *Recipient* means any State or local unit of government or agency thereof, and any private entity, institution, or organization, to which Federal financial assistance is extended directly, or through such government or agency, but such term does not include any ultimate beneficiary of such assistance.

(b) The obligation of a recipient to formulate, implement, and maintain an equal employment opportunity program, in accordance with this subpart, extends to State and local police agencies, correctional agencies, criminal court systems, probation and parole agencies, and similar agencies responsible for the reduction and control of crime and delinquency.

(c) Assignments of compliance responsibility for title VI of the Civil Rights Act of 1964 have been made by the Department of Justice to the Department of Health and Human Services, covering educational institutions and general hospital or medical facilities. Similarly, the Department of Labor, in pursuance of its authority under Executive Orders 11246 and 11375, has assigned responsibility for monitoring equal employment opportunity under government contracts with medical and educational institutions, and non-profit organizations, to the Department of Health and Human Services. Accordingly, monitoring responsibility in compliance matters in agencies of the kind mentioned in this paragraph rests with the Department of Health and Human Services, and agencies of this kind are exempt from the provisions of this subpart, and are not responsible for the development of equal employment opportunity programs in accordance herewith.

(d) Each recipient of LEAA assistance within the criminal justice system which has 50 or more employees and which has received grants or subgrants of $25,000 or more pursuant to and since the enactment of the Safe Streets Act of 1968, as amended, and which has a service population with a minority representation of 3 percent or more, is required to formulate, implement and maintain an equal employment opportunity program relating to employment practices affecting minority persons and women within 120 days after either the promulgation of these amended guidelines, or the initial application for assistance is approved, whichever is sooner. Where a recipient

has 50 or more employees, and has received grants or subgrants of $25,000 or more, and has a service population with a minority representation of less than 3 percent, such recipient is required to formulate, implement, and maintain an equal employment opportunity program relating to employment practices affecting women. For a definition of ''employment practices'' within the meaning of this paragraph, see § 42.202(c).

(e) *Minority persons* shall include persons who are Black, not of Hispanic origin; Asian or Pacific Islanders; American Indians or Alaskan Native; or Hispanics. These categories are defined at 28 CFR 42.402(e).

(f) *Fiscal year* means the 12 calendar months beginning October 1, and ending September 30, of the following calendar year. A fiscal year is designated by the calendar year in which it ends.

[43 FR 28802, June 30, 1978, as amended by Order No. 960–81, 46 FR 52357, Oct. 27, 1981]

§ 42.303 Evaluation of employment opportunities.

(a) A necessary prerequisite to the development and implementation of a satisfactory equal employment opportunity program is the identification and analysis of any problem areas inherent in the utilization or participation of minorities and women in all of the recipient's employment phases (e.g., recruitment, selection, and promotion) and the evaluation of employment opportunities for minorities and women.

(b) In many cases an effective equal employment opportunity program may only be accomplished where the program is coordinated by the recipient agency with the cognizant Office of Personnel Management or similar agency responsible by law, in whole or in part, for the recruitment and selection of entrance candidates and selection of candidates for promotion.

(c) In making the evaluation of employment opportunities, the recipient shall conduct such analysis separately for minorities and women. However, all racial and ethnic data collected to perform an evaluation pursuant to the requirements of this section should be cross classified by sex to ascertain the extent to which minority women or minority men may be underutilized. The evaluation should include but not necessarily be limited to, the following factors:

(1) An analysis of present representation of women and minority persons in all job categories;

(2) An analysis of all recruitment and employment selection procedures for the preceding fiscal year, including such things as position descriptions, application forms, recruitment methods and sources, interview procedures, test administration and test validity, educational prerequisites, referral procedures and final selection methods, to insure that equal employment opportunity is being afforded in all job categories;

(3) An analysis of seniority practices and provisions, upgrading and promotion procedures, transfer procedures (lateral or vertical), and formal and informal training programs during the preceding fiscal year, in order to insure that equal employment opportunity is being afforded;

(4) A reasonable assessment to determine whether minority employment is inhibited by external factors such as the lack of access to suitable housing in the geographical area served by a certain facility or the lack of suitable transportation (public or private) to the workplace.

[43 FR 28802, June 30, 1978, as amended by Order No. 899–80, 45 FR 43703, June 30, 1980]

§ 42.304 Written equal employment opportunity program.

Each recipient's equal employment opportunity program shall be in writing and shall include:

(a) A job classification table or chart which clearly indicates for each job classification or assignment the number of employees within each respective job category classified by race, sex and national origin (include for example Hispanic, Asian or Pacific Islander, and American Indian or Alaskan Native). Also, principal duties and rates of pay should be clearly indicated for each job classification. Where auxiliary duties are assigned or more than one rate of pay applies because of length of time in the job or other factors, a special notation should be made. Where the recipient operates more than one

shift or assigns employees within each shift to varying locations, as in law enforcement agencies, the number by race, sex and national origin on each shift and in each location should be identified. When relevant, the recipient should indicate the racial/ethnic mix of the geographic area of assignments by the inclusion of minority population and percentage statistics.

(b) The number of disciplinary actions taken against employees by race, sex and national origin within the preceding fiscal year, the number and types of sanctions imposed (suspension indefinitely, suspension for a term, loss of pay, written reprimand, oral reprimand, other) against individuals by race, sex and national origin.

(c) The number of individuals by race, sex and national origin (if available) applying for employment within the preceding fiscal year and the number by race, sex and national origin (if available) of those applicants who were offered employment and those who were actually hired. If such data is unavailable, the recipient should institute a system for the collection of such data.

(d) The number of employees in each job category by race, sex and national origin who made application for promotion or transfer within the preceding fiscal year and the number in each job category by race, sex, and national origin who were promoted or transferred.

(e) The number of employees by race, sex, and national origin who were terminated within the preceding fiscal year, identifying by race, sex, and national origin which were voluntary and involuntary terminations.

(f) Available community and area labor characteristics within the relevant geographical area including total population, workforce and existing unemployment by race, sex and national origin. Such data may be obtained from the Bureau of Labor Statistics, Washington, DC, State and local employment services, or other reliable sources. Recipient should identify the sources of the data used.

(g) A detailed narrative statement setting forth the recipient's existing employment policies and practices as defined in § 42.202(c). Thus, for example, where testing is used in the employment selection process, it is not sufficient for the recipient to simply note the fact. The recipient should identify the test, describe the procedures followed in administering and scoring the test, state what weight is given to test scores, how a cut-off score is established and whether the test has been validated to predict or measure job performance and, if so, a detailed description of the validation study. Similarly detailed responses are required with respect to other employment policies, procedures, and practices used by the applicant.

(1) The statement should include the recipient's detailed analysis of existing employment policies, procedures, and practices as they relate to employment of minorities and women (see § 42.303) and, where improvements are necessary, the statement should set forth in detail the specific steps the recipient will take for the achievement of full and equal employment opportunity. The Department of Justice Guidelines on Employee Selection Procedures, 28 CFR part 50, set out the appropriate standards for nondiscriminatory selection procedures. Recipients of LEAA assistance using selection procedures which are not in conformity with the Department of Justice guidelines shall set forth the specific areas of nonconformity, the reasons which may explain any such nonconformity, and if necessary, the steps the recipient agency will take to correct any existing deficiency.

(2) The recipient should also set forth a program for recruitment of minority persons based on an informed judgment of what is necessary to attract minority applications including, but not necessarily limited to, dissemination of posters, use of advertising media patronized by minorities, minority group contacts and community relations programs. As appropriate, recipients may wish to refer to recruitment techniques suggested in revised order No. 4 of the Office of Federal Contract Compliance, U.S. Department of Labor, found at 41 CFR 60–2.24(e).

(h) Plan for dissemination of the applicant's Equal Employment Opportunity Program to all personnel, applicants and the general public. As appropriate, recipients may wish to refer to the recommendations for dissemination of policy suggested in revised order No. 4 of the Office of Federal Contract Compliance, U.S. Department of Labor, found at 41 CFR 60–2.21.

(i) Designation of specified personnel to implement and maintain adherence to the equal employment opportunity program and a description of their specific responsibilities suggested in revised order No. 4 of the Office of Federal Contract Compliance, U.S. Department of Labor, found at 41 CFR 60–2.22.

§ 42.305 Recordkeeping and certification.

The equal employment opportunity program and all records used in its preparation shall be kept on file and retained by each recipient covered by these guidelines for subsequent audit or review by responsible personnel of the cognizant State planning agency or the LEAA. Prior to the authorization to fund new or continuing programs under the Omnibus Crime Control and Safe Streets Act of 1968, the recipient shall file a certificate with the cognizant State planning agency or with the LEAA Office of Civil Rights Compliance stating that the equal employment opportunity program is on file with the recipient. This form of the certification shall be as follows:

> I, _____ (person filing the application) certify that the _____ (criminal justice agency) has formulated an equal employment program in accordance with 28 CFR 42.301, et seq., subpart E, and that it is on file in the Office of _____ (name), _____ (address), _____ (title), for review or audit by officials of the cognizant State planning agency or the Law Enforcement Assistance Administration as required by relevant laws and regulations.

The criminal justice agency created by the Governor to implement the Safe Streets Act within each State shall certify that it requires, as a condition of the receipt of block grant funds, that recipients from it have executed an Equal Employment Opportunity Program in accordance with this subpart, or that, in conformity with the terms and conditions of this regulation no equal employment opportunity programs are required to be filed by that jurisdiction.

§ 42.306 Guidelines.

(a) Recipient agencies are expected to conduct a continuing program of self-evaluation to ascertain whether any of their recruitment, employee selection or promotional policies (or lack thereof) directly or indirectly have the effect of denying equal employment opportunities to minority individuals and women.

(b) Equal employment program modification may be suggested by LEAA whenever identifiable referral or selection procedures and policies suggest to LEAA the appropriateness of improved selection procedures and policies. Accordingly, any recipient agencies falling within this category are encouraged to develop recruitment, hiring or promotional guidelines under their equal employment opportunity program which will correct, in a timely manner, any identifiable employment impediments which may have contributed to the existing disparities.

§ 42.307 Obligations of recipients.

The obligation of those recipients subject to these guidelines for the maintenance of an equal employment opportunity program shall continue for the period during which the LEAA assistance is extended to a recipient or for the period during which a comprehensive law enforcement plan filed pursuant to the Safe Streets Act is in effect within the State, whichever is longer, unless the assurances of compliance, filed by a recipient in accordance with § 42.204(a)(2), specify a different period.

§ 42.308 Noncompliance.

Failure to implement and maintain an equal employment opportunity program as required by these guidelines shall subject recipients of LEAA assistance to the sanctions prescribed by the Safe Streets Act and the equal employment opportunity regulations of the Department of Justice. (See 42 U.S.C. 3757 and 28 CFR 42.207.)

Subpart F—Coordination of Enforcement of Non-discrimination in Federally Assisted Programs

AUTHORITY: Executive Order 12250.

SOURCE: Order No. 670–76, 41 FR 52669, Dec. 1, 1976, unless otherwise noted.

§ 42.401 Purpose and application.

The purpose of this subpart is to insure that federal agencies which extend financial assistance properly enforce title VI of the Civil Rights Act of 1964 and similar provisions in federal grant statutes. Enforcement of the latter statutes is covered by this subpart to the extent that they relate to prohibiting discrimination on the ground of race, color or national origin in programs receiving federal financial assistance of the type subject to title VI. Responsibility for enforcing title VI rests with the federal agencies which extend financial assistance. In accord with the authority granted the Attorney General under Executive Order 12250, this subpart shall govern the respective obligations of federal agencies regarding enforcement of title VI. This subpart is to be used in conjunction with the 1965 Attorney General Guidelines for Enforcement of title VI, 28 CFR 50.3.

[Order No. 670–76, 41 FR 52669, Dec. 1, 1976, as amended by Order No. 960–81, 46 FR 52357, Oct. 27, 1981]

§ 42.402 Definitions.

For purpose of this subpart:

(a) *Title VI* refers to title VI of the Civil Rights Act of 1964, 42 U.S.C. 2000d to 2000d–4. Where appropriate, this term also refers to the civil rights provisions of other federal statutes to the extent that they prohibit discrimination on the ground of race, color or national origin in programs receiving federal financial assistance of the type subject to title VI itself.

(b) *Agency* or *federal agency* refers to any federal department or agency which extends federal financial assistance of the type subject to title VI.

(c) *Program* refers to programs and activities receiving federal financial assistance of the type subject to title VI.

(d) *Assistant Attorney General* refers to the Assistant Attorney General, Civil Rights Division, United States Department of Justice.

(e) Where designation of persons by race, color or national origin is required, the following designations shall be used:

(1) *Black, not of Hispanic Origin*. A person having origins in any of the black racial groups of Africa.

(2) *Hispanic*. A person of Mexican, Puerto Rican, Cuban, Central or South American or other Spanish Culture or origin, regardless of race.

(3) *Asian or Pacific Islander*. A person having origins in any of the original peoples of the Far East, Southeast Asia, the Indian Subcontinent, or the Pacific Islands. This area includes, for example, China, Japan, Korea, the Philippine Islands, and Samoa.

(4) *American Indian or Alaskan Native*. A person having origins in any of the original peoples of North America, and who maintain cultural identification through tribal affiliation or community recognition.

(5) *White, not of Hispanic Origin*. A person having origins in any of the original people of Europe, North Africa, or the Middle East. Additional subcategories based on national origin or primary language spoken may be used where appropriate, on either a national or a regional basis. Paragraphs (e)(1) through (e)(5) of this section, inclusive, set forth in this section are in conformity with the OMB Ad Hoc Committee on Race/Ethnic Categories' recommendations. To the extent that said designations are modified by the OMB Ad Hoc Committee, paragraphs (e)(1) through (e)(5) of this section, inclusive, set forth in this section shall be interpreted to conform with those modifications.

(f) *Covered employment* means employment practices covered by title VI. Such practices are those which:

(1) Exist in a program where a primary objective of the federal financial assistance is to provide employment, or

(2) Cause discrimination on the basis of race, color or national origin with respect to beneficiaries or potential beneficiaries of the assisted program.

§ 42.403 Agency regulations.

(a) Any federal agency subject to title VI which has not issued a regulation implementing title VI shall do so as promptly as possible and, no later than the effective date of this subpart, shall submit a proposed regulation to the Assistant Attorney General pursuant to paragraph (c) of this section.

(b) Any federal agency which becomes subject to title VI after the effective date of this subpart shall, within 60 days of the date it becomes subject to title VI, submit a proposed regulation to the Assistant Attorney General pursuant to paragraph (c) of this section.

(c) Regarding issuance or amendment of its regulation implementing title VI, a federal agency shall take the following steps:

(1) Before publishing a proposed regulation of amendment in the FEDERAL REGISTER, submit it to the Assistant Attorney General, Civil Rights Division;

(2) After receiving the approval of the Assistant Attorney General, publish the proposed regulation or amendment in the FEDERAL REGISTER for comment;

(3) After final agency approval, submit the regulation or amendment, through the Assistant Attorney General, to the Attorney General for final approval. (Executive Order 12250 delegates to the Attorney General the function, vested in the President by section 602 of title VI, 42 U.S.C. 2000d–1, of approving title VI regulations and amendments to them.)

(d) The title VI regulation of each federal agency shall be supplemented with an appendix listing the types of federal financial assistance, i.e., the statutes authorizing such assistance, to which the regulation applies. Each such appendix shall be kept up-to-date by amendments published, at appropriate intervals, in the FEDERAL REGISTER. In issuing or amending such an appendix, the agency need not follow the procedure set forth in paragraph (c) of this section.

[Order No. 670–76, 41 FR 52669, Dec. 1, 1976, as amended by Order No. 960–81, 46 FR 52357, Oct. 27, 1981]

§ 42.404 Guidelines.

(a) Federal agencies shall publish title VI guidelines for each type of program to which they extend financial assistance, where such guidelines would be appropriate to provide detailed information on the requirements of title VI. Such guidelines shall be published within three months of the effective date of this subpart or of the effective date of any subsequent statute authorizing federal financial assistance to a new type of program. The guidelines shall describe the nature of title VI coverage, methods of enforcement, examples of prohibited practices in the context of the particular type of program, required or suggested remedial action, and the nature of requirements relating to covered employment, data collection, complaints and public information.

(b) Where a federal agency determines that title VI guidelines are not appropriate for any type of program to which it provides financial assistance, the reasons for the determination shall be stated in writing and made available to the public upon request.

§ 42.405 Public dissemination of title VI information.

(a) Federal agencies shall make available and, where appropriate, distribute their title VI regulations and guidelines for use by federal employees, applicants for federal assistance, recipients, beneficiaries and other interested persons.

(b) State agency compliance programs (see § 42.410) shall be made available to the public.

(c) Federal agencies shall require recipients, where feasible, to display prominently in reasonable numbers and places posters which state that the recipients operate programs subject to the nondiscrimination requirements of title VI, summarize those requirements, note the availability of title VI information from recipients and the federal agencies, and explain briefly the procedures for filing complaints. Federal agencies and recipients shall also include information on title VI requirements, complaint procedures and the rights of beneficiaries in handbooks, manuals, pamphlets and other

material which are ordinarily distributed to the public to describe the federally assisted programs and the requirements for participation by recipients and beneficiaries. To the extent that recipients are required by law or regulation to publish or broadcast program information in the news media, federal agencies and recipients shall insure that such publications and broadcasts state that the program in question is an equal opportunity program or otherwise indicate that discrimination in the program is prohibited by federal law.

(d)(1) Where a significant number or proportion of the population eligible to be served or likely to be directly affected by a federally assisted program (e.g., affected by relocation) needs service or information in a language other than English in order effectively to be informed of or to participate in the program, the recipient shall take reasonable steps, considering the scope of the program and the size and concentration of such population, to provide information in appropriate languages to such persons. This requirement applies with regard to written material of the type which is ordinarily distributed to the public.

(2) Federal agencies shall also take reasonable steps to provide, in languages other than English, information regarding programs subject to title VI.

§ 42.406 Data and information collection.

(a) Except as determined to be inappropriate in accordance with paragraph (f) of this section or § 42.404(b), federal agencies, as a part of the guidelines required by § 42.404, shall in regard to each assisted program provide for the collection of data and information from applicants for and recipients of federal assistance sufficient to permit effective enforcement of title VI.

(b) Pursuant to paragraph (a) of this section, in conjunction with new applications for federal assistance (see 28 CFR 50.3(c) II A) and in any applications for approval of specific projects or significant changes in applications for continuation or renewal of assistance (see 28 CFR 50.3(c) II B), and at other times as appropriate, federal agencies shall require applicants and recipients to provide relevant and current title VI information. Examples of data and information which, to the extent necessary and appropriate for determining compliance with title VI, should be required by agency guidelines are as follows:

(1) The manner in which services are or will be provided by the program in question, and related data necessary for determining whether any persons are or will be denied such services on the basis of prohibited discrimination;

(2) The population eligible to be served by race, color and national origin;

(3) Data regarding covered employment, including use or planned use of bilingual public-contact employees serving beneficiaries of the program where necessary to permit effective participation by beneficiaries unable to speak or understand English;

(4) The location of existing or proposed facilities connected with the program, and related information adequate for determining whether the location has or will have the effect of unnecessarily denying access to any persons on the basis of prohibited discrimination;

(5) The present or proposed membership, by race, color and national origin, in any planning or advisory body which is an integral part of the program;

(6) Where relocation is involved, the requirements and steps used or proposed to guard against unnecessary impact on persons on the basis of race, color or national origin.

(c) Where additional data, such as demographic maps, the racial composition of affected neighborhoods or census data, is necessary or appropriate, for understanding information required in paragraph (b) of this section, federal agencies shall specify, in their guidelines or in other directives, the need to submit such data. Such additional data should be required, however, only to the extent that it is readily available or can be compiled with reasonable effort.

(d) Pursuant to paragraphs (a) and (b) of this section, in all cases, federal agencies shall require:

(1) That each applicant or recipient promptly notify the agency upon its request of any lawsuit filed against the

applicant or recipient alleging discrimination on the basis of race, color or national origin, and that each recipient notify the agency upon its request of any complaints filed against the recipient alleging such discrimination;

(2) A brief description of any applicant's or recipient's pending applications to other federal agencies for assistance, and of federal asssistance being provided at the time of the application or requested report;

(3) A statement by any applicant describing any civil rights compliance reviews regarding the applicant conducted during the two-year period before the application, and information concerning the agency or organization performing the review; and periodic statements by any recipient regarding such reviews;

(4) A written assurance by any applicant or recipient that it will compile and maintain records required, pursuant to paragraphs (a) and (b) of this section, by the agency's guidelines or other directives.

(e) Federal agencies should inquire whether any agency listed by the applicant or recipient pursuant to paragraph (d)(2) of this section has found the applicant or recipient to be in noncompliance with any relevant civil rights requirement.

(f) Where a federal agency determines that any of the requirements of this section are inapplicable or inappropriate in regard to any program, the basis for this conclusion shall be set forth in writing and made available to the public upon request.

§ 42.407 Procedures to determine compliance.

(a) *Agency staff determination responsibility*. All federal agency staff determinations of title VI compliance shall be made by, or be subject to the review of, the agency's civil rights office. Where federal agency responsibility for approving applications or specific projects has been assigned to regional or area offices, the agency shall include personnel having title VI review responsibility on the staffs of such offices and such personnel shall perform the functions described in paragraphs (b) and (c) of this section.

(b) *Application review*. Prior to approval of federal financial assistance, the federal agency shall make written determination as to whether the applicant is in compliance with title VI (see 28 CFR 50.3(c) II A). The basis for such a determination under ''the agency's own investigation'' provision (see 28 CFR 50.3(c) II A(2)), shall be submission of an assurance of compliance and a review of the data submitted by the applicant. Where a determination cannot be made from this data, the agency shall require the submission of necessary additional information and shall take other steps necessary for making the determination. Such other steps may include, for example, communicating with local government officials or minority group organizations and field reviews. Where the requested assistance is for construction, a pre-approval review should determine whether the location and design of the project will provide service on a nondiscriminatory basis and whether persons will be displaced or relocated on a nondiscriminatory basis.

(c) *Post-approval review*. (1) Federal agencies shall establish and maintain an effective program of post-approval compliance reviews regarding approved new applications (see 28 CFR 50.3(c) II A), applications for continuation or renewal of assistance (28 CFR 50.3(c) II B) and all other federally assisted programs. Such reviews are to include periodic submission of compliance reports by recipients to the agencies and, where appropriate, field reviews of a representative number of major recipients. In carrying out this program, agency personnel shall follow agency manuals which establish appropriate review procedures and standards of evaluation. Additionally, agencies should consider incorporating a title VI component into general program reviews and audits.

(2) The results of post-approval reviews shall be committed to writing and shall include specific findings of fact and recommendations. A determination of the compliance status of the recipient reviewed shall be made as promptly as possible.

(d) *Notice to assistant attorney general*. Federal agencies shall promptly notify

the Assistant Attorney General of instances of probable noncompliance determined as the result of application reviews or post-approval compliance reviews.

§ 42.408 Complaint procedures.

(a) Federal agencies shall establish and publish in their guidelines procedures for the prompt processing and disposition of complaints. The complaint procedures shall provide for notification in writing to the complainant and the applicant or recipient as to the disposition of the complaint. Federal agencies should investigate complaints having apparent merit. Where such complaints are not investigated, good cause must exist and must be stated in the notification of disposition. In such cases, the agency shall ascertain the feasibility of referring the complaint to the primary recipient, such as a State agency, for investigation.

(b) Where a federal agency lacks jurisdiction over a complaint, the agency shall, wherever possible, refer the complaint to another federal agency or advise the complainant.

(c) Where a federal agency requires or permits recipient to process title VI complaints, the agency shall ascertain whether the recipients' procedures for processing complaints are adequate. The federal agency shall obtain a written report of each such complaint and investigation and shall retain a review responsibility over the investigation and disposition of each complaint.

(d) Each federal agency shall maintain a log of title VI complaints filed with it, and with its recipients, identifying each complainant by race, color, or national origin; the recipient; the nature of the complaint; the dates the complaint was filed and the investigation completed; the disposition; the date of disposition; and other pertinent information. Each recipient processing title VI complaints shall be required to maintain a similar log. Federal agencies shall report to the Assistant Attorney General on January 1, 1977, and each six months thereafter, the receipt, nature and disposition of all such title VI complaints.

§ 42.409 Employment practices.

Enforcement of title VI compliance with respect to covered employment practices shall not be superseded by state and local merit systems relating to the employment practices of the same recipient.

§ 42.410 Continuing State programs.

Each state agency administering a continuing program which receives federal financial assistance shall be required to establish a title VI compliance program for itself and other recipients which obtain federal assistance through it. The federal agencies shall require that such state compliance programs provide for the assignment of title VI responsibilities to designated state personnel and comply with the minimum standards established in this subpart for federal agencies, including the maintenance of records necessary to permit federal officials to determine the title VI compliance of the state agencies and the sub-recipient.

§ 42.411 Methods of resolving noncompliance.

(a) Effective enforcement of title VI requires that agencies take prompt action to achieve voluntary compliance in all instances in which noncompliance is found. Where such efforts have not been successful within a reasonable period of time, the agency shall initiate appropriate enforcement procedures as set forth in the 1965 Attorney General Guidelines, 28 CFR 50.3. Each agency shall establish internal controls to avoid unnecessary delay in resolving noncompliance, and shall promptly notify the Assistant Attorney General of any case in which negotiations have continued for more than sixty days after the making of the determination of probable noncompliance and shall state the reasons for the length of the negotiations.

(b) Agreement on the part of a noncomplying recipient to take remedial steps to achieve compliance with title VI shall be set forth in writing by the recipient and the federal agency. The remedial plan shall specify the action necessary for the correction of title VI deficiencies and shall be available to the public.

§ 42.412 Coordination.

(a) The Attorney General's authority under Executive Order 12250 is hereby delegated to the Assistant Attorney General, Civil Rights Division.

(b) Consistent with this subpart and the 1965 Attorney General Guidelines, 28 CFR 50.3, the Assistant Attorney General may issue such directives and take such other action as he deems necessary to insure that federal agencies carry out their responsibilities under title VI. In addition, the Assistant Attorney General will routinely provide to the Director of the Office of Management and Budget copies of all inter-agency survey reports and related materials prepared by the Civil Rights Division that evaluate the effectiveness of an agency's title VI compliance efforts. Where cases or matters are referred to the Assistant Attorney General for investigation, litigation or other appropriate action, the federal agencies shall, upon request, provide appropriate resources to the Assistant Attorney General to assist in carrying out such action.

[Order No. 670–76, 41 FR 52669, Dec. 1, 1976, as amended by Order No. 699–77, 42 FR 15315, Mar. 21, 1977; Order No. 960–81, 46 FR 52357, Oct. 27, 1981]

§ 42.413 Interagency cooperation and delegations.

(a) Where each of a substantial number of recipients is receiving assistance for similar or related purposes from two or more federal agencies, or where two or more federal agencies cooperate in administering assistance for a given class of recipients, the federal agencies shall:

(1) Jointly coordinate compliance with title VI in the assisted programs, to the extent consistent with the federal statutes under which the assistance is provided; and

(2) Designate one of the federal agencies as the lead agency for title VI compliance purposes. This shall be done by a written delegation agreement, a copy of which shall be provided to the Assistant Attorney General and shall be published in the FEDERAL REGISTER.

(b) Where such designations or delegations of functions have been made, the agencies shall adopt adequate written procedures to assure that the same standards of compliance with title VI are utilized at the operational levels by each of the agencies. This may include notification to agency personnel in handbooks, or instructions on any forms used regarding the compliance procedures.

(c) Any agency conducting a compliance review or investigating a complaint of an alleged title VI violation shall notify any other affected agency upon discovery of its jurisdiction and shall subsequently inform it of the findings made. Such reviews or investigations may be made on a joint basis.

(d) Where a compliance review or complaint investigation under title VI reveals a possible violation of Executive Order 11246, title VII of the Civil Rights Act of 1964 (42 U.S.C. 2000e), or any other federal law, the appropriate agency shall be notified.

§ 42.414 Federal agency staff.

Sufficient personnel shall be assigned by a federal agency to its title VI compliance program to ensure effective enforcement of title VI.

§ 42.415 Federal agency title VI enforcement plan.

Each federal agency subject to title VI shall develop a written plan for enforcement which sets out its priorities and procedures. This plan shall be available to the public and shall address matters such as the method for selecting recipients for compliance reviews, the establishment of timetables and controls for such reviews, the procedure for handling complaints, the allocation of its staff to different compliance functions, the development of guidelines, the determination as to when guidelines are not appropriate, and the provision of civil rights training for its staff.

Subpart G—Nondiscrimination Based on Handicap in Federally Assisted Programs or Activities—Implementation of Section 504 of the Rehabilitation Act of 1973

AUTHORITY: 5 U.S.C. 301; 28 U.S.C. 509, 510; 29 U.S.C. 706, 794; E.O. 12250.

SOURCE: 45 FR 37622, June 3, 1980, unless otherwise noted.

EDITORIAL NOTE: Nomenclature changes by Order No. 2679–2003, appear at 68 FR 51364, 51365, 51366, Aug. 26, 2003.

GENERAL PROVISIONS

§ 42.501 Purpose.

The purpose of this subpart is to implement section 504 of the Rehabilitation Act of 1973, as amended, which prohibits discrimination on the basis of handicap in any program or activity receiving Federal financial assistance.

§ 42.502 Application.

This subpart applies to each recipient of Federal financial assistance from the Department of Justice and to each program or activity receiving such assistance. The requirements of this subpart do not apply to the ultimate beneficiaries of Federal financial assistance in the program or activity receiving Federal financial assistance.

§ 42.503 Discrimination prohibited.

(a) *General.* No qualified handicapped person shall, solely on the basis of handicap, be excluded from participation in, be denied the benefits of, or otherwise be subjected to discrimination under any program or activity receiving Federal financial assistance.

(b) *Discriminatory actions prohibited.* (1) A recipient may not discriminate on the basis of handicap in the following ways directly or through contractual, licensing, or other arrangements under any program or activity receiving Federal financial assistance:

(i) Deny a qualified handicapped person the opportunity accorded others to participate in the program or activity receiving Federal financial assistance;

(ii) Deny a qualified handicapped person an equal opportunity to achieve the same benefits that others achieve in the program or activity receiving Federal financial assistance;

(iii) Provide different or separate assistance to handicapped persons or classes of handicapped persons than is provided to others unless such action is necessary to provide qualified handicapped persons or classes of handicapped persons with assistance as effective as that provided to others;

(iv) Deny a qualified handicapped person an equal opportunity to participate in the program or activity by providing services to the program;

(v) Deny a qualified handicapped person an opportunity to participate as a member of a planning or advisory body;

(vi) Permit the participation in the program or activity of agencies, organizations or persons which discriminate against the handicapped beneficiaries in the recipient's program;

(vii) Intimidate or retaliate against any individual, whether handicapped or not, for the purpose of interfering with any right secured by section 504 or this subpart.

(2) A recipient may not deny a qualified handicapped person the opportunity to participate in any program or activity receiving Federal financial assistance on the ground that other specialized aid, benefits, or services for handicapped persons are available.

(3) A recipient may not, directly or through contractual, licensing, or other arrangements, utilize criteria or methods of administration that either purposely or in effect discriminate on the basis of handicap, defeat or substantially impair accomplishment of the objectives of the recipient's program or activity with respect to handicapped persons, or perpetuate the discrimination of another recipient if both recipients are subject to common administrative control or are agencies of the same State.

(4) A recipient may not, in determining the location or design of a facility, make selections that either purposely or in effect discriminate on the basis of handicap or defeat or substantially impair the accomplishment of the objectives of the program or activity with respect to handicapped persons.

(5) A recipient is prohibited from discriminating on the basis of handicap in aid, benefits, or services operating without Federal financial assistance where such action would discriminate against the handicapped beneficiaries or participants in any program or activity of the recipient receiving Federal financial assistance.

(6) Any entity not otherwise receiving Federal financial assistance but using a facility provided with the aid of

Federal financial assistance after the effective date of this subpart is prohibited from discriminating on the basis of handicap.

(c) The exclusion of nonhandicapped persons or specified classes of handicapped persons from aid, benefits, or services limited by Federal statute or executive order to handicapped persons or a different class of handicapped persons is not prohibited by this subpart.

(d) Recipients shall administer programs or activities in the most integrated setting appropriate to the needs of qualified handicapped persons.

(e) Recipients shall insure that communications with their applicants, employees and beneficiaries are effectively conveyed to those having impaired vision and hearing.

(f) A recipient that employs fifteen or more persons shall provide appropriate auxiliary aids to qualified handicapped persons with impaired sensory, manual, or speaking skills where a refusal to make such provision would discriminatorily impair or exclude the participation of such persons in a program or activity receiving Federal financial assistance. Such auxiliary aids may include brailled and taped material, qualified interpreters, readers, and telephonic devices. Attendants, individually prescribed devices, readers for personal use or study, or other devices or services of a personal nature are not required under this section. Departmental officials may require recipients employing fewer than fifteen persons to provide auxiliary aids when this would not significantly impair the ability of the recipient to provide its benefits or services.

(g) The enumeration of specific forms of prohibited discrimination in this subpart is not exhaustive but only illustrative.

§ 42.504 Assurances required.

(a) *Assurances.* Every application for Federal financial assistance covered by this subpart shall contain an assurance that the program or activity will be conducted in compliance with the requirements of section 504 and this subpart. Each agency within the Department that provides Federal financial assistance shall specify the form of the foregoing assurance and shall require applicants for Department financial assistance to obtain like assurances from subgrantees, contractors and subcontractors, transferees, successors in interest, and others connected with the program or activity. Each Department agency shall specify the extent to which an applicant will be required to confirm that the assurances provided by secondary recipients are being honored. Each assurance shall include provisions giving notice that the United States has a right to seek judicial enforcement of section 504 and the assurance.

(b) *Assurances from government agencies.* Assurances from agencies of State and local governments shall extend to any other agency of the same governmental unit if the policies of the other agency will affect the program or activity for which Federal financial assistance is requested.

(c) *Assurances from institutions.* The assurances required with respect to any institution or facility shall be applicable to the entire institution or facility.

(d) *Duration of obligation.* Where the Federal financial assistance is to provide or is in the form of real or personal property, the assurance will obligate the recipient and any transferee for the period during which the property is being used for the purpose for which the Federal financial assistance is extended or for another purpose involving the provisions of similar benefits, or for as long as the recipient retains ownership or possession of the property, whichever is longer. In all other cases the assurance will obligate the recipient for the period during which Federal financial assistance is extended.

(e) *Covenants.* With respect to any transfer of real property, the transfer document shall contain a covenant running with the land assuring nondiscrimination on the condition described in paragraph (d) of this section. Where the property is obtained from the Federal Government, the covenant may also include a condition coupled with a right to be reserved by the Department to revert title to the property in the event of a breach of the covenant.

(f) *Remedies*. The failure to secure either an assurance or a sufficient assurance from a recipient shall not impair the right of the Department to enforce the requirements of section 504 and this subpart.

§ 42.505 Administrative requirements for recipients.

(a) *Remedial action*. If the Department finds that a recipient has discriminated against persons on the basis of handicap in violation of section 504 or this subpart, the recipient shall take the remedial action the Department considers necessary to overcome the effects of the discrimination. This may include remedial action with respect to handicapped persons who are no longer participants in the recipient's program or activity but who were participants in the program when such discrimination occurred, and with respect to handicapped persons who would have been participants in the program had the discrimination not occurred.

(b) *Voluntary action*. A recipient may take steps, in addition to the requirements of this subpart, to increase the participation of qualified handicapped persons in the recipient's program or activity.

(c) *Self-evaluation*. (1) A recipient shall, within one year of the effective date of this subpart, evaluate and modify its policies and practices that do not meet the requirements of this subpart. During this process the recipient shall seek the advice and assistance of interested persons, including handicapped persons or organizations representing handicapped persons. During this period and thereafter the recipient shall take any necessary remedial steps to eliminate the effects of discrimination that resulted from adherence to these policies and practices.

(2) A recipient employing fifty or more persons and receiving Federal financial assistance from the Department of $25,000 or more shall, for at least three years following completion of the evaluation required under paragraph (c)(1) of this section, maintain on file, make available for public inspection, and provide to the Department on request:

(i) A list of the interested persons consulted,

(ii) A description of areas examined and problems identified, and

(iii) A description of modifications made and remedial steps taken.

(d) *Designation of responsible employee*. A recipient employing fifty or more persons and receiving Federal financial assistance from the Department of $25,000 or more shall designate at least one person to coordinate compliance with this subpart.

(e) *Adoption of grievance procedures*. A recipient employing fifty or more persons and receiving Federal financial assistance from the Department of $25,000 or more shall adopt grievance procedures that incorporate due process standards (*e.g.* adequate notice, fair hearing) and provide for the prompt and equitable resolution of complaints alleging any action prohibited by this subpart. Such procedures need not be established with respect to complaints from applicants for employment. An employee may file a complaint with the Department without having first used the recipient's grievance procedures.

(f) *Notice*. (1) A recipient employing fifty or more persons and receiving Federal financial assistance from the Department of more than $25,000 shall, on a continuing basis, notify participants, beneficiaries, applicants, employees and unions or professional organizations holding collective bargaining or professional agreements with the recipient that it does not discriminate on the basis of handicap in violation of section 504 and this subpart. The notification shall state, where appropriate, that the recipient does not discriminate in its programs or activities with respect to access, treatment or employment. The notification shall also include identification of the person responsible for coordinating compliance with this subpart and where to file section 504 complaints with the Department and, where applicable, with the recipient. A recipient shall make the initial notification required by this paragraph within 90 days of the effective date of this subpart. Methods of initial and continuing notification may include the posting of notices, publication in newspapers and magazines, placement of notices in recipients' publication, and

distribution of memoranda or other written communications.

(2) Recruitment materials or publications containing general information that a recipient makes available to participants, beneficiaries, applicants, or employees shall include a policy statement of nondiscrimination on the basis of handicap.

(g) The Department may require any recipient with fewer than fifty employees and receiving less than $25,000 in Federal financial assistance to comply with paragraphs (c)(2) and (d) through (f) of this section.

(h) The obligation to comply with this subpart is not affected by any State or local law or requirement or limited employment opportunities for handicapped persons in any occupation or profession.

EMPLOYMENT

§ 42.510 Discrimination prohibited.

(a) *General.* (1) No qualified handicapped person shall on the basis of handicap be subjected to discrimination in employment under any program or activity receiving Federal financial assistance.

(2) A recipient shall make all decisions concerning employment under any program or activity receiving Federal financial assistance in a manner which insures that discrimination on the basis of handicap does not occur and may not limit, segregate, or classify applicants or employees in any way that adversely affects their opportunities or status because of handicap.

(3) A recipient may not participate in a contractual or other relationship that has the effect of subjecting qualified handicapped applicants or employees to discrimination prohibited by this section. The relationships referred to in this paragraph include relationships with employment and referral agencies, labor unions, organizations providing or administering fringe benefits to employees of the recipient, and organizations providing training and apprenticeships, and with civil service agencies in State or local units of government.

(b) *Specific activities.* The prohibition against discrimination in employment applies to the following activities:

(1) Recruitment, advertising, and application processing;

(2) Hiring, upgrading, promotion, award of tenure, demotion, transfer, layoff, termination, right of return from layoff and rehiring;

(3) Pay and any other form of compensation and changes in compensation, including fringe benefits available by virtue of employment, whether or not administered by the recipient;

(4) Job assignments, job classifications, organizational structures, position descriptions, lines of progression, and seniority lists;

(5) Leaves of absence, sick leave, or any other leave;

(6) Selection and financial support for training, including apprenticeship, professional meetings, conferences, and selection for leaves of absence to pursue training;

(7) Employer-sponsored activities, including those that are social or recreational; and

(8) Any other term, condition, or privilege of employment.

(c) In offering employment or promotions to handicapped individuals, recipients may not reduce the amount of compensation offered because of any disability income, pension or other benefit the applicant or employee receives from another source.

(d) A recipient's obligation to comply with this section is not affected by any inconsistent term of any collective bargaining agreement to which it is a party.

§ 42.511 Reasonable accommodation.

(a) A recipient shall make reasonable accommodation to the known physical or mental limitations of an otherwise qualified handicapped applicant or employee unless the recipient can demonstrate, based on the individual assessment of the applicant or employee, that the accommodation would impose an undue hardship on the operation of its program or activity.

(b) Reasonable accommodation may include making facilities used by employees readily accessible to and usable by handicapped persons, job restructuring, part-time or modified work schedules, acquisition or modification

of equipment or devices (*e.g.*, telecommunication or other telephone devices), the provisions of readers or qualified interpreters, and other similar actions.

(c) Whether an accommodation would impose an undue hardship on the operation of a recipient's program or activity depends upon a case-by-case analysis weighing factors that include:

(1) The overall size of the recipient's program or activity with respect to number of employees, number and type of facilities, and size of budget;

(2) The type of the recipient's operation, including the composition and structure of the recipient's workforce; and

(3) The nature and cost of the accommodation needed.

A reasonable accommodation may require a recipient to bear more than an insignificant economic cost in making allowance for the handicap of a qualified applicant or employee and to accept minor inconvenience which does not bear on the ability of the handicapped individual to perform the essential duties of the job.

§ 42.512 Employment criteria.

(a) A recipient may not use any employment test or other selection criterion that tends to screen out handicapped persons unless:

(1) The test score or other selection criterion, as used by the recipient, is shown to be job-related for the position in question, and

(2) Alternative job-related tests or criteria that tend to screen out fewer handicapped persons are not shown by the appropriate Department officials to be available.

(b) A recipient shall administer tests using procedures (*e.g.*, auxiliary aids such as readers for visually-impaired persons or qualified sign language interpreters for hearing-impaired persons) that accommodate the special problems of handicapped persons to the fullest extent, consistent with the objectives of the test. When a test is administered to an applicant or employee who has a handicap that impairs sensory, manual, or speaking skills, the test results must accurately reflect the applicant's or employee's job skills, aptitude, or whatever other factor the test purports to measure, rather than reflecting the applicant's or employee's impaired sensory, manual, or speaking skills (except where those skills are the factors that the test purports to measure).

§ 42.513 Preemployment inquiries.

(a) Except as provided in paragraphs (b) and (c) of this section, a recipient may not conduct a preemployment medical examination and may not make preemployment inquiry of an applicant as to whether the applicant is a handicapped person or as to the nature or severity of a handicap. A recipient may, however, make preemployment inquiry into an applicant's ability to perform job-related functions.

(b) When a recipient is taking remedial action to correct the effects of past discrimination pursuant to § 42.505(a) of this subpart, when a recipient is taking voluntary action to overcome the effects of conditions that resulted in limited participation in its Federally assisted program or activity pursuant to § 42.505(b) of this subpart, or when a recipient is taking affirmative action pursuant to section 503 of the Act, the recipient may invite applicants for employment to indicate whether and to what extent they are handicapped: *Provided*, That:

(1) The recipient states clearly on any written questionnaire used for this purpose or makes clear orally if no written questionnaire is used that the information requested is intended for use solely in connection with its remedial action obligations or its voluntary efforts;

(2) The recipient states clearly that the information is being requested on a voluntary basis, that it will be kept confidential as provided in paragraph (d) of this section, that refusal to provide it will not subject the applicant or employee to any adverse treatment, and that it will be used only in accordance with this part.

(c) Nothing in this section shall prohibit a recipient from conditioning an offer of employment on the results of a medical examination conducted prior to the employee's entrance on duty: *Provided*, That:

(1) All entering employees are subjected to such an examination regardless of handicap, and

(2) The results of such an examination are used only in accordance with the requirements of this subpart.

(d) The applicant's medical record shall be collected and maintained on separate forms and kept confidential, except that the following persons may be informed:

(1) Supervisors and managers regarding restrictions on the work of handicapped persons and necessary accommodations;

(2) First aid and safety personnel if the condition might require emergency treatment; and

(3) Government officials investigating compliance with the Act upon request for relevant information.

ACCESSIBILITY

§ 42.520 Discrimination prohibited.

Recipients shall insure that no qualified handicapped person is denied the benefits of, excluded from participation in, or otherwise subjected to discrimination under any program or activity receiving Federal financial assistance because the recipient's facilities are inaccessible to or unusable by handicapped persons.

§ 42.521 Existing facilities.

(a) *Accessibility*. A recipient shall operate each program or activity to which this subpart applies so that when each part is viewed in its entirety it is readily accessible to and usable by handicapped persons. This section does not require a recipient to make each of its existing facilities or every part of a facility accessible to and usable by handicapped persons.

(b) *Compliance procedures*. A recipient may comply with the requirement of paragraph (a) of this section through acquisition or redesign of equipment, reassignment of services to accessible buildings, assignment of aids to beneficiaries, delivery of services at alternate accessible sites, alteration of existing facilities, or any other method that results in making its program or activity accessible to handicapped persons. A recipient is not required to make structural changes in existing facilities where other methods are effective in achieving compliance with paragraph (a) of this section. In choosing among methods for meeting the requirement of paragraph (a) of this section, a recipient shall give priority to those methods that serve handicapped persons in the most integrated setting appropriate.

(c) *Small providers*. If a recipient with fewer than fifteen employees finds, after consultation with a handicapped person seeking its services, that there is no method of complying with § 42.521(a) other than making a significant alteration in its existing facilities, the recipient may, as an alternative, refer the handicapped person to other available providers of those services that are accessible.

(d) *Time period*. A recipient shall comply with the requirement of paragraph (a) of this section within ninety days of the effective date of this subpart. However, where structural changes in facilities are necessary, such changes shall be made as expeditiously as possible and shall be completed no later than three years from the effective date of this subpart. If structural changes to facilities are necessary, a recipient shall, within six months of the effective date of this subpart, develop a written plan setting forth the steps that will be taken to complete the changes together with a schedule for making the changes. The plan shall be developed with the assistance of interested persons, including handicapped persons or organizations representing handicapped persons and shall be made available for public inspection. The plan shall, at a minimum:

(1) Identify physical obstacles in the recipient's facilities that limit the accessibility of its program or activity to handicapped persons;

(2) Describe in detail the methods that will be used to make the facilities accessible;

(3) Specify the schedule for taking the steps necessary to achieve full accessibility under § 42.521(a) and, if the time period of the transition plan is longer than one year, identify the steps that will be taken during each year of the transition period; and

(4) Indicate the person responsible for implementation of the plan.

(e) *Notice*. The recipient shall adopt and implement procedures to insure that interested persons, including mentally retarded persons or persons with impaired vision or hearing, special learning problems, or other disabilities, can obtain information as to the existence and location of services, activities, and facilities that are accessible to and usable by handicapped persons.

[45 FR 37622, June 3, 1980, as amended by Order No. 2679–2003, 68 FR 51364, Aug. 26, 2003]

§ 42.522 New construction.

(a) *Design and construction*. Each new facility constructed by, on behalf of, or for the use of a recipient shall be designed and constructed in such a manner that the facility is readily accessible to and usable by handicapped persons, if the construction was commenced after the effective date of this subpart. Any alterations to existing facilities shall, to the maximum extent feasible, be made in an accessible manner. Any alterations to existing facilities shall, to the maximum extent feasible, be made in an accessible manner.

(b) *Conformance with Uniform Federal Accessibility Standards*. (1) Effective as of March 7, 1988, design, construction, or alteration of buildings in conformance with sections 3–8 of the Uniform Federal Accessibility Standards (UFAS) (appendix A to 41 CFR subpart 101–19.6) shall be deemed to comply with the requirements of this section with respect to those buildings. Departures from particular technical and scoping requirements of UFAS by the use of other methods are permitted where substantially equivalent or greater access to and usability of the building is provided.

(2) For purposes of this section, section 4.1.6(1)(g) of UFAS shall be interpreted to exempt from the requirements of UFAS only mechanical rooms and other spaces that, because of their intended use, will not require accessibility to the public or beneficiaries or result in the employment or residence therein of persons with physical handicaps.

(3) This section does not require recipients to make building alterations that have little likelihood of being accomplished without removing or altering a load-bearing structural member.

[45 FR 37622, June 3, 1980, as amended by Order 1249–88, 53 FR 3206, Feb. 4, 1988]

PROCEDURES

§ 42.530 Procedures.

(a) The procedural provisions applicable to title VI of the Civil Rights Act of 1964 (28 CFR 42.106–42.110) apply to this subpart except that the provision contained in §§ 42.110(e) and 42.108(c)(3) which requires the Attorney General's approval before the imposition of any sanction against a recipient does not apply to programs or activities funded by LEAA, NIJ, BJS, OJARS and OJJDP. The applicable provisions contain requirements for compliance information (§ 42.106), conduct of investigations (§ 42.107), procedure for effecting compliance (§ 42.108), hearings (§ 42.109), and decisions and notices (§ 42.110). (See appendix C.)

(b) In the case of programs or activities funded by LEAA, NIJ, BJS, OJARS and OJJDP, the timetables and standards for investigation of complaints and for the conduct of compliance reviews contained in § 42.205(c)(1) through (c)(3) and § 42.206 (c) and (d) are applicable to this subpart except that any finding of noncompliance shall be enforced as provided in paragraph (a) of this section. (See appendix D.)

(c) In the case of programs or activities funded by LEAA, NIJ, BJS, OJARS and OJJDP, the refusal to provide requested information under paragraph (a) of this section and § 42.106 will be enforced pursuant to the provisions of section 803(a) of title I of the Omnibus Crime Control and Safe Streets Act, as amended by the Justice System Improvement Act of 1979, Public Law 96–157, 93 Stat. 1167.

(d) For acts of discrimination occurring prior to the effective date of this subpart, the 180-day limitation period for filing of complaints (§ 42.107 of this title) will apply from that date.

(e) The Department will investigate complaints alleging discrimination in violation of section 504 occurring prior to the effective date of this subpart where the language of the statute or HEW's interagency guidelines (43 FR

2132, January 13, 1978) implementing Executive Order 11914 (41 FR 17871, April 28, 1976) provided notice that the challenged policy or practice was unlawful.

DEFINITIONS

§ 42.540 Definitions.

As used in this subpart the term:

(a) *The Act* means the Rehabilitation Act of 1973, Public Law 93–112, as amended (29 U.S.C. 701 *et seq.*).

(b) *Section 504* means section 504 of the Act (29 U.S.C. 794).

(c) *Department* means the Department of Justice.

(d) *LEAA* means the Law Enforcement Assistance Administration; *NIJ* means the National Institute of Justice; *BJS* means the Bureau of Justice Statistics; *OJARS* means the Office of Justice Assistance, Research and Statistics; *OJJDP* means Office of Juvenile Justice and Delinquency Prevention.

(e) *Recipient* means any State or unit of local goverment, any instrumentality of a State or unit of local government, any public or private agency, institution, organization, or other public or private entity, or any person to which Federal financial assistance is extended directly or through another recipient, including any successor, assignee, or transferree of a recipient, but excluding the ultimate beneficiary of the assistance.

(f) *Federal financial assistance* means any grant, cooperative agreement, loan, contract (other than a direct Federal procurement contract or a contract of insurance or guaranty), subgrant, contract under a grant or any other arrangement by which the Department provides or otherwise makes available assistance in the form of:

(1) Funds;

(2) Services of Federal personnel;

(3) Real and personal property or any interest in or use of such property, including:

(i) Transfers or leases of such property for less than fair market value or for reduced consideration; and

(ii) Proceeds from a subsequent transfer or lease of such property if the Federal share of its fair market value is not returned to the Federal Government;

(4) Any other thing of value by way of grant, loan, contract or cooperative agreement.

(g) *Facility* means all or any portion of buildings, structures, equipment, roads, walks, parking lots, or other real or personal property or interest in such property.

(h) *Program or activity* means all of the operations of any entity described in paragraphs (h) (1) through (4) of this section, any part of which is extended Federal financial assistance:

(1)(i) A department, agency, special purpose district, or other instrumentality of a State or of a local government; or

(ii) The entity of such State or local government that distributes such assistance and each such department or agency (and each other State or local government entity) to which the assistance is extended, in the case of assistance to a State or local government;

(2)(i) A college, university, or other postsecondary institution, or a public system of higher education; or

(ii) A local educational agency (as defined in 20 U.S.C. 7801), system of vocational education, or other school system;

(3)(i) An entire corporation, partnership, or other private organization, or an entire sole proprietorship—

(A) If assistance is extended to such corporation, partnership, private organization, or sole proprietorship as a whole; or

(B) Which is principally engaged in the business of providing education, health care, housing, social services, or parks and recreation; or

(ii) The entire plant or other comparable, geographically separate facility to which Federal financial assistance is extended, in the case of any other corporation, partnership, private organization, or sole proprietorship; or

(4) Any other entity which is established by two or more of the entities described in paragraph (h)(1), (2), or (3) of this section.

(i) *Ultimate beneficiary* is one among a class of persons who are entitled to benefit from, or otherwise participate in, programs or activities receiving

Federal financial assistance and to whom the protections of this subpart extend. The ultimate beneficiary class may be the general public or some narrower group of persons.

(j) *Benefit* includes provision of services, financial aid or disposition (*i.e.*, treatment, handling, decision, sentencing, confinement, or other prescription of conduct).

(k) *Handicapped person*. (1) *Handicapped person* means any person who (i) has a physical or mental impairment which substantially limits one or more major life activities, (ii) has a record of such an impairment, or (iii) is regarded as having such an impairment. For purposes of employment, such term does not include any individual who is an alcoholic or drug abuser whose current use of alcohol or drugs prevents such individual from performing the duties of the job in question or whose employment, by reason of such current alcohol or drug abuse, would constitute a direct threat to property or the safety of others.

(2) As used in this subpart the phrase:

(i) *Physical or mental impairment* means:

(A) Any physiological disorder or condition, cosmetic disfigurement, or anatomical loss affecting one or more of the following body systems: neurological; musculoskeletal; special sense organs; respiratory, including speech organs; cardiovascular; reproductive, digestive; genitourinary; hemic and lymphatic; skin; and endocrine;

(B) Any mental or psychological disorder such as mental retardation, organic brain syndrome, emotional or mental illness, and specific learning disabilities.

The term *physical or mental impairment* includes, but is not limited to, such diseases and conditions as orthopedic, visual, speech, and hearing impairments, cerebral palsy, epilepsy, muscular dystrophy, multiple sclerosis, cancer, heart disease, diabetes, mental retardation, emotional illness, and drug and alcohol abuse.

(ii) *Major life activities* mean functions such as caring for one's self, performing manual tasks walking, seeing, hearing, speaking, breathing, learning, and working.

(iii) *Has a record of such an impairment* means has a history of, or has been misclassified as having, a mental or physical impairment that substantially limits one or more major life activities.

(iv) *Is regarded as having an impairment* means:

(A) Has a physical or mental impairment that does not substantially limit major life activities but that is treated by a recipient as constituting such a limitation;

(B) Has a physical or mental impairment that substantially limits major life activities only as a result of the attitudes of others toward such impairment; or

(C) Has none of the impairments defined in paragraph (k)(2)(i) of this section but is treated by a recipient as having such an impairment.

(l) *Qualified handicapped person* means:

(1) With respect to employment, a handicapped person who, with reasonable accommodation, can perform the essential functions of the job in question;

(2) With respect to services, a handicapped person who meets the essential eligibility requirements for the receipt of such services.

(m) *Handicap* means any condition or characteristic that renders a person a handicapped person as defined in paragraph (k) of this section.

(n) *Drug abuse* means:

(1) The use of any drug or substance listed by the Department of Justice in 21 CFR 1308.11, under authority of the Controlled Substances Act, 21 U.S.C. 801, as a controlled substance unavailable for prescription because:

(i) The drug or substance has a high potential for abuse,

(ii) The drug or other substance has no currently accepted medical use in treatment in the United States,

(iii) There is a lack of accepted safety for use of the drug or other substance under medical supervision;

(2) The misuse of any drug or substance listed by the Department of Justice in 21 CFR 1308.12 through 1308.15 under authority of the Controlled Substances Act as a controlled substance available for prescription.

Examples of (1) include certain opiates and opiate derivatives (*e.g.*, heroin) and hallucinogenic substances (*e.g.*, marihuana, mescaline, peyote) and depressants (*e.g.*, methaqualone). Examples of (2) include opium, coca leaves, methadone, amphetamines and barbiturates.

(o) *Alcohol abuse* includes alcoholism but also means any misuse of alcohol which demonstrably interferes with a person's health, interpersonal relations or working.

[45 FR 37622, June 3, 1980, as amended by Order No. 2679–2003, 68 FR 51364, Aug. 26, 2003]

APPENDIX A TO SUBPART G OF PART 42—FEDERAL FINANCIAL ASSISTANCE ADMINISTERED BY THE DEPARTMENT OF JUSTICE TO WHICH THIS SUBPART APPLIES

NOTE: Failure to list a type of Federal assistance in appendix A shall not mean, if section 504 is otherwise applicable, that a program or activity is not covered.

EDITORIAL NOTE: For the text of appendix A to subpart G, see appendix A to subpart C of this part.

[Order No. 1204–87, 52 FR 24450, July 1, 1987]

APPENDIX B TO SUBPART G OF PART 42 [RESERVED]

APPENDIX C TO SUBPART G OF PART 42—DEPARTMENT REGULATIONS UNDER TITLE VI OF THE CIVIL RIGHTS ACT OF 1964 (28 CFR 42.106–42.110) WHICH APPLY TO THIS SUBPART

EDITORIAL NOTE: For the text of appendix C, see §§ 42.106 through 42.110 of this part.

APPENDIX D TO SUBPART G OF PART 42—OJARS' REGULATIONS UNDER THE OMNIBUS CRIME CONTROL AND SAFE STREETS ACT, AS AMENDED, WHICH APPLY TO THIS SUBPART (28 CFR 42.205 AND 42.206)

EDITORIAL NOTE: For the text of appendix D, see §§ 42.205 and 42.206 of this part.

Subpart H—Procedures for Complaints of Employment Discrimination Filed Against Recipients of Federal Financial Assistance

AUTHORITY: E.O. 12250, 45 FR 72995, 3 CFR, 1980 Comp., p. 298; E.O. 12067, 43 FR 28967, 3 CFR, 1978 Comp., p. 206.

SOURCE: Order No. 992–83, 48 FR 3577, Jan. 25, 1983, unless otherwise noted.

§ 42.601 Purpose and application.

The purpose of this regulation is implement procedures for processing and resolving complaints of employment discrimination filed against recipients of Federal financial assistance subject to title VI of the Civil Rights Act of 1964, title IX of the Education Amendments of 1972, the State and Local Fiscal Assistance Act of 1972, as amended, and provisions similar to title VI and title IX in Federal grant statutes. Enforcement of such provisions in Federal grant statutes is covered by this regulation to the extent they relate to prohibiting employment discrimination on the ground of race, color, national origin, religion or sex in programs receiving Federal financial assistance of the type subject to title VI or title IX. This regulation does not, however, apply to the Omnibus Crime Control and Safe Streets Act of 1968, as amended, the Juvenile Justice and Delinquency Prevention Act, as amended, the Comprehensive Employment Training Act of 1973, as amended, or Executive Order 11246.

§ 42.602 Exchange of information.

EEOC and agencies shall share any information relating to the employment policies and practices of recipients of federal financial assistance that may assist each office in carrying out its responsibilities. Such information shall include, but not necessarily be limited to, affirmative action programs, annual employment reports, complaints, investigative files, conciliation or compliance agreements, and compliance review reports and files.

§ 42.603 Confidentiality.

When an agency receives information obtained by EEOC, the agency shall observe the confidentiality requirements

of sections 706(b) and 709(e) of title VII as would EEOC, except in cases where the agency receives the same information from a source independent of EEOC or has referred a joint complaint to EEOC under this regulation. In such cases, the agency may use independent source information or information obtained by EEOC under the agency's investigative authority in a subsequent title VI, title IX or revenue sharing act enforcement proceeding. Agency questions concerning confidentiality shall be directed to the Associate Legal Counsel for Legal Services, Office of Legal Counsel of EEOC.

§ 42.604 Standards for investigation, reviews and hearings.

In any investigation, compliance review, hearing or other proceeding, agencies shall consider title VII case law and EEOC Guidelines, 29 CFR parts 1604 through 1607, unless inapplicable, in determining whether a recipient of Federal financial assistance has engaged in an unlawful employment practice.

§ 42.605 Agency processing of complaints of employment discrimination.

(a) Within ten days of receipt of a complaint of employment discrimination, an agency shall notify the respondent that it has received a complaint of employment discrimination, including the date, place and circumstances of the alleged unlawful employment practice.

(b) Within thirty days of receipt of a complaint of employment discrimination an agency shall:

(1) Determine whether it has jurisdiction over the complaint under title VI, title IX, or the revenue sharing act; and

(2) Determine whether EEOC may have jurisdiction over the complaint under title VII of or the Equal Pay Act.

(c) An agency shall transfer to EEOC a complaint of employment discrimination over which it does not have jurisdiction but over which EEOC may have jurisdiction within thirty days of receipt of a complaint. At the same time, the agency shall notify the complainant and the respondent of the transfer, the reason for the transfer, the location of the EEOC office to which the complaint was transferred and that the date the agency received the complaint will be deemed the date it was received by EEOC.

(d) If any agency determines that a complaint of employment discrimination is a joint complaint, then the agency may refer the complaint to EEOC. The agency need not consult with EEOC prior to such a referral. An agency referral of a joint complaint should occur within thirty days of receipt of the complaint.

(e) An agency shall refer to EEOC all joint complaints solely alleging employment discrimination against an individual. If an agency determines that special circumstances warrant its investigation of such a joint complaint, then the agency shall determine whether the complainant has filed a similar charge of employment discrimination with EEOC.

(1) If an agency determines that the complainant has filed a similar charge of employment discrimination with EEOC, then the agency may investigate the complaint if EEOC agrees to defer its investigation pending the agency investigation.

(2) If an agency determines that the complainant has not filed a similar charge of employment discrimination with the EEOC, then the agency may investigate the complaint if special circumstances warrant such action. In such cases, EEOC shall defer its investigation of the referred joint complaint pending the agency investigation.

(f) An agency shall not refer to EEOC a joint complaint alleging a pattern or practice of employment discrimination unless special circumstances warrant agency referral of the complaint to EEOC.

(g) If a joint complaint alleges discrimination in employment and in other practices of a recipient, an agency should, absent special circumstances, handle the entire complaint under the agency's own investigation procedures. In such cases, the agency shall determine whether the complainant has filed a similar charge of employment discrimination with EEOC. If such a charge has been filed, the agency and EEOC shall coordinate their activities. Upon agency request,

EEOC should ordinarily defer its investigation pending the agency investigation.

(h) When a joint complaint is referred to EEOC for investigation, the agency shall advise EEOC of the relevant civil rights provision(s) applicable to the employment practices of the recipient, whether the agency wants to receive advance notice of any conciliation negotiations, whether the agency wants EEOC to seek information concerning the relationship between the alleged discrimination and the recipient's Federally assisted programs or activities and, where appropriate, whether a primary objective of the Federal financial assistance is to provide employment. The agency shall also notify the complainant and the recipient of the referral, the location of the EEOC office to which the complaint was referred, the identity of the civil rights provision(s) involved, the authority of EEOC under this regulation and that the date the agency received the complaint will be deemed the date it was received by EEOC. Specifically, the notice shall inform the recipient that the agency has delegated to EEOC its investigative authority under title VI, title IX, or the revenue sharing act, and the relevant act's implementing regulations. The agency, therefore, may use information obtained by EEOC under the agency's investigative authority in a subsequent title VI, title IX or revenue sharing act enforcement proceeding.

[Order No. 992-83, 48 FR 3577, Jan. 25, 1983, as amended at 61 FR 33658, June 28, 1996]

§ 42.606 General rules concerning EEOC action on complaints.

(a) A complaint of employment discrimination filed with an agency, which is transferred or referred to EEOC under this regulation, shall be deemed a charge received by EEOC. For all purposes under title VII and the Equal Pay Act, the date such a complaint was received by an agency shall be deemed the date it was received by EEOC.

(b) When EEOC investigates a joint complaint it shall, where appropriate, seek sufficient information to allow the referring agency to determine whether the alleged employment discrimination is in a program or activity that receives Federal financial assistance and/or whether the alleged employment discrimination causes discrimination with respect to beneficiaries or potential beneficiaries of the assisted program.

(c) Upon referral of a joint complaint alleging a pattern or practice of employment discrimination, EEOC generally will limit its investigation to the allegation(s) which directly affect the complainant.

(d) If EEOC, in the course of an investigation of a joint complaint, is unable to obtain information from a recipient through voluntary means, EEOC shall consult with the referring agency to determine an appropriate course of action.

(e) If EEOC agrees to defer its investigation of a complaint of employment discrimination pending an agency investigation of the complaint, then EEOC shall give due weight to the agency's determination concerning the complaint.

§ 42.607 EEOC dismissals of complaints.

If EEOC determines that the title VII allegations of a joint complaint should be dismissed, EEOC shall notify the complainant and the recipient of the reason for the dismissal and the effect the dismissal has on the complainant's rights under the relevant civil rights provision(s) of the referring agency, and issue a notice of right to sue under title VII. At the same time, EEOC shall transmit to the referring agency a copy of EEOC's file.

§ 42.608 Agency action on complaints dismissed by EEOC.

Upon EEOC's transmittal of a dismissal under § 42.607 of this regulation, the referring agency shall determine within thirty days, what, if any, action the agency intends to take with respect to the complaint and then notify the complainant and the recipient. In reaching that determination, the referring agency shall give due weight to EEOC's determination that the title VII allegations of the joint complaint should be dismissed. If the referring agency decides to take action with respect to a complaint that EEOC has dismissed for lack of reasonable cause

to believe that title VII has been violated, the agency shall notify the Assistant Attorney General and the Chairman of the EEOC in writing of the action it plans to take and the basis of its decision to take such action.

§ 42.609 EEOC reasonable cause determination and conciliation efforts.

(a) If EEOC, after investigation of a joint complaint, determines that reasonable cause exists to believe that title VII has been violated, EEOC shall advise the referring agency, the complainant and the recipient of that determination and attempt to resolve the complaint by informal methods of conference, conciliation and persuasion. If EEOC would like the referring agency to participate in conciliation negotiations, EEOC shall so notify the agency and the agency shall participate. EEOC shall provide advance notice of any conciliation negotiations to referring agencies that request such notice, whether or not EEOC requests their participation in the negotiations.

(b) If EEOC's efforts to resolve the complaint by informal methods of conference, conciliation and persuasion fail, EEOC shall:

(1) Issue a notice of failure of conciliation to the recipient in accordance with 29 CFR 1601.25;

(2) Transmit to the referring agency a copy of EEOC's investigative file, including its Letter of Determination and notice of failure conciliation;

(3) If the recipient is not a government, governmental entity or political subdivision, determine whether EEOC will bring suit under title VII and, in accordance with 29 CFR 1601.28, issue a notice of right to sue under title VII;

(4) If the recipient is a government, governmental entity or political subdivision, refer the matter to the Attorney General in accordance with 29 CFR 1601.29. The Attorney General, or his or her delegate, will determine whether the Department of Justice will bring suit under title VII and, in accordance with 29 CFR 1601.28, issue a notice of right to sue under title VII.

§ 42.610 Agency enforcement of unresolved complaints.

(a) Upon EEOC's transmittal of a reasonable cause determination and notice of failure of conciliation under § 42.609(b)(2) of this regulation, the referring agency shall determine, within thirty days, whether the recipient has violated any applicable civil rights provision(s) which the agency has a responsibility to enforce. The referring agency shall give due weight to EEOC's determination that reasonable cause exists to believe that title VII has been violated.

(b) If the referring agency determines that the recipient has violated any applicable civil rights provision(s) which the agency has a responsibility to enforce, the agency shall so notify the complainant and the recipient and determine whether further efforts to obtain voluntary compliance are warranted. In reaching that determination, the agency shall give due weight to the failure of EEOC's efforts to resolve the complaint by informal methods. If the referring agency determines that further efforts to obtain voluntary compliance are not warranted or if such further efforts fail, the agency shall initiate appropriate enforcement proceedings under its own regulations.

(c) If the referring agency determines that the recipient has not violated any applicable civil rights provision(s) which the agency has a responsibility to enforce, the agency shall notify the complainant, the recipient, the Assistant Attorney General and the Chairman of the EEOC in writing of the basis of that determination.

§ 42.611 EEOC negotiated settlements and conciliation agreements.

If the parties enter into a negotiated settlement (as described in 29 CFR 1601.20) prior to a determination or a conciliation agreement (as described in 29 CFR 1601.24) after a determination, EEOC shall notify the referring agency that the complaint has been settled. The agency shall take no further action on the complaint of employment discrimination thereafter except that the agency may take the existence of the complaint into account in scheduling the recipient for a review under the agency's regulations.

§42.612 Interagency consultation.

(a) Before investigating whether the employment practices of a recipient of Federal financial assistance constitute a pattern or practice of unlawful discrimination or initiating formal administrative enforcement procedures on that basis, an agency shall, to the extent practical, consult with the Chairman of the EEOC and the Assistant Attorney General to assure that duplication of effort will be minimized.

(b) Prior to the initiation of any legal action against a recipient of Federal financial assistance alleging unlawful employment practices, the Department of Justice and/or EEOC shall, to the extent practical, notify the appropriate agency or agencies of the proposed action and the substance of the allegations.

§42.613 Definitions.

As used in this regulation, the term:

(a) *Agency* means any Federal department or agency which extends Federal financial assistance subject to any civil rights provision(s) to which this regulation applies.

(b) *Assistant Attorney General* refers to the Assistant Attorney General, Civil Rights Division, United States Department of Justice, or his or her delegate.

(c) *Chairman of the EEOC* refers to the Chairman of the Equal Employment Opportunity Commission, or his or her delegate.

(d) *EEOC* means the Equal Empoyment Opportunity Commission and, where appropriate, any of its District Offices.

(e) *Federal financial assistance* includes:

(1) Grants and loans of Federal funds,

(2) The grant or donation of Federal property and interests in property,

(3) The detail of Federal personnel,

(4) The sale and lease of, and the permission to use (on other than a casual or transient basis), Federal property or any interest in such property without consideration or at a nominal consideration, or at a consideration which is reduced for the purpose of assisting the recipient, or in recognition of the public interest to be served by such sale or lease to the recipient, and

(5) Any Federal agreement, arrangement, or other contract which has as one of its purposes the provision of assistance.

For purposes of this regulation, the term *Federal financial assistance* also includes funds disbursed under the revenue sharing act.

(f) *Joint complaint* means a complaint of employment discrimination covered by title VII or the Equal Pay Act and by title VI, title IX, or the revenue sharing act.

(g) *Recipient* means any State, political subdivision of any State, or instrumentality of any State or political subdivision, any public or private agency, institution, organization, or other entity, or any individual, in any State, to whom Federal financial assistance is extended, directly or through another recipient, for any program, including any successor, assign, or transferee thereof, but such term does not include any ultimate beneficiary under such program.

(h) *Revenue sharing act* refers to the State and Local Fiscal Assistance Act of 1972, as amended, 31 U.S.C. 1221 *et seq*.

(i) *Title VI* refers to title VI of the Civil Rights Act of 1964, 42 U.S.C. 2000d to 2000d–4. Where appropriate, *title VI* also refers to the civil rights provisions of other Federal statutes or regulations to the extent that they prohibit employment discrimination on the ground or race, color, religion, sex or national origin in programs receiving Federal financial assistance of the type subject to title VI itself.

(j) *Title VII* refers to title VII of the Civil Rights Act of 1964, as amended, 42 U.S.C. 2000e, *et seq*.

(k) *Title IX* refers to title IX of the Education Amendments of 1972, 20 U.S.C. 1681 to 1683.

Subpart I—Nondiscrimination on the Basis of Age in Federally Assisted Programs or Activities; Implementation of the Age Discrimination Act of 1975

AUTHORITY: 42 U.S.C. 6103(a)(4); 45 CFR part 90.

SOURCE: Order No. 1843–94, 59 FR 6560, Feb. 11, 1994, unless otherwise noted.

GENERAL PROVISIONS

§ 42.700 Purpose.

(a) This subpart implements the Age Discrimination Act of 1975, as amended (42 U.S.C. 5101–6107) (Act). Subject to certain exceptions, the Act prohibits discrimination on the basis of age in programs or activities receiving federal financial assistance.

(b) The Secretary of Health and Human Services has issued a general regulation (45 CFR part 90) to guide other federal agencies regarding implementation of the Act. This subpart is generally based upon that general regulation.

§ 42.701 Application.

(a) This subpart applies to each program or activity that receives federal financial assistance from the Department of Justice.

(b) This subpart does not apply to employment practices, except to those occurring in programs or activities that receive federal financial assistance under the Job Training Partnership Act.

§ 42.702 Definitions.

As used in this subpart, the term:

Act means the Age Discrimination Act of 1975, as amended, 42 U.S.C. 6101–6107.

Action means any act, activity, policy, rule, standard, or method of administration; or the use of any policy, rule, standard, or method of administration.

Age distinction means any action using age or an age-related term.

Age-related term means a term that necessarily implies a particular age or range of ages (e.g., ''youth,'' ''juvenile,'' ''adult,'' ''older persons,'' but not ''student'').

Department means the Department of Justice.

Federal financial assistance means any grant, entitlement, loan, cooperative agreement, contract (other than a procurement contract or a contract of insurance or guaranty), or any other arrangement by which the Department provides assistance in the form of:

(1) Funds;

(2) Services of federal personnel; or

(3) Real or personal property or any interest in or use of such property, including—

(i) Transfers or leases of property for less than fair market value or for reduced consideration; and

(ii) Proceeds from a subsequent transfer or lease of property if the federal share of its fair market value is not returned to the federal government.

FMCS means the Federal Mediation and Conciliation Service.

OJP means the Office of Justice Programs. OJP coordinates the work of the Bureau of Justice Assistance, the National Institute of Justice, the Bureau of Justice Statistics, and the Office of Juvenile Justice and Delinquency Prevention; OJP includes the Office for Victims of Crime.

Program or activity means all of the operations of any entity described in paragraphs (1) through (4) of this definition, any part of which is extended Federal financial assistance:

(1)(i) A department, agency, special purpose district, or other instrumentality of a State or of a local government; or

(ii) The entity of such State or local government that distributes such assistance and each such department or agency (and each other State or local government entity) to which the assistance is extended, in the case of assistance to a State or local government;

(2)(i) A college, university, or other postsecondary institution, or a public system of higher education; or

(ii) A local educational agency (as defined in 20 U.S.C. 7801), system of vocational education, or other school system;

(3)(i) An entire corporation, partnership, or other private organization, or an entire sole proprietorship—

(A) If assistance is extended to such corporation, partnership, private organization, or sole proprietorship as a whole; or

(B) Which is principally engaged in the business of providing education, health care, housing, social services, or parks and recreation; or

(ii) The entire plant or other comparable, geographically separate facility to which Federal financial assistance is extended, in the case of any other corporation, partnership, private organization, or sole proprietorship; or

(4) Any other entity which is established by two or more of the entities described in paragraph (1), (2), or (3) of this definition.

Recipient means any state or political subdivision, any instrumentality of a State or political subdivision, any public or private agency, institution, organization, or other entity, or any person to which federal financial assistance is extended, directly or through another recipient. ''Recipient'' includes any successor, assignee, or transferee, but does not include the ultimate beneficiary of the assistance.

Secretary means the Secretary of Health and Human Services or his or her designee.

United States means the fifty States, the District of Columbia, Puerto Rico, the Virgin Islands, American Samoa, Guam, Wake Island, the Trust Territory of the Pacific Islands, the Northern Marinas, and the territories and possessions of the United States.

[Order No. 1843–94, 59 FR 6560, Feb. 11, 1994, as amended by Order 2679–2003, 68 FR 51366, Aug. 26, 2003]

§§ 42.703–42.709 [Reserved]

STANDARDS FOR DETERMINING AGE DISCRIMINATION

§ 42.710 General prohibition.

(a) Subject to the exceptions discussed in §§ 42.711–42.713, no person in the United States shall, on the basis of age, be excluded from participation in, be denied the benefits of, or be subjected to discrimination in any program or activity to which this subpart applies. This prohibition applies to actions taken by a recipient, directly or through contractual or other arrangements, that have the purpose or effect of discriminating on the basis of age.

(b) This prohibition encompasses treatment of elderly persons, children and any other age group. Unless one of the exception applies, the recipient may use neither a minimum age limit nor a maximum age limit in connection with receipt of benefits or services or other participation in a program or activity subject to this subpart.

§ 42.711 Exception; authorized by law.

(a) This subpart does not apply to an age distinction contained in a portion of a federal or state statute or a local statute or ordinance adopted by an elected, general-purpose legislative body which portion:

(1) Provides any benefits or assistance to persons on the basis of age;

(2) Establishes criteria for participation in age-related terms; or

(3) Describes intended beneficiaries or target groups in age-related terms.

(b) The exception set forth in paragraph (a) of this section does not extend to regulations adopted by an administrative agency pursuant to a specific statutory provision or otherwise.

§ 42.712 Exception; normal operation or statutory objective.

(a) A recipient may take an action that would otherwise be prohibited by § 42.710(a), if such action reasonably takes age into account as a factor necessary to the normal operation of or the achievement of any statutory objective of the program or activity.

(1) *Normal operation* refers to the operation of a program or activity without significant changes that would impair its ability to meet its objectives.

(2) A *statutory objective* of a program or activity is a purpose that is expressly stated in a federal or state statute or a local statute or ordinance adopted by an elected, general-purpose body.

(b) This exception applies when the following test is met—

(1) Age is used as a measure or approximation of one or more other characteristics;

(2) The other characteristic must be measured or approximated in order to continue the normal operation of the program or activity or to achieve any statutory objective of the program;

(3) The other characteristic can be reasonably measured or approximated by the use of age; and

(4) The other characteristic is impractical to measure directly on an individual basis.

(c) The question whether an age distinction comes within this section depends upon the particular facts, including the nature and purpose of the program or activity, the basis for and the nature and purpose of the age distinction, and the manner in which the age distinction is used.

§ 42.713 Exception; reasonable factors other than age.

(a) A recipient may take an action, otherwise prohibited by § 42.710(a), that affects age groups differently, if such differentiation is based upon reasonable factors other than age.

(b) This exception does not apply to the use of an explicit age distinction, but to conduct that has the effect of differentiating among age groups. This exception applies when the factor (other than age) upon which the recipient's action is based bears a direct and substantial relationship to the normal operation of or achievement of a statutory objective of the program or activity.

§ 42.714 Special benefits.

If a recipient operating a program or activity provides special benefits to the elderly or to children, such use of age distinctions shall be presumed to be necessary to the normal operation of the program or activity, notwithstanding the provisions of § 42.712.

§ 42.715 Burden of proof regarding exceptions.

The burden of proving that an age distinction or other action falls within the exceptions described in § 42.712 and § 42.713 is on the recipient. This allocation of the burden of proof applies in proceedings by the Department to enforce the Act.

§§ 42.716–42.719 [Reserved]

DUTIES OF RECIPIENTS

§ 42.720 General responsibility.

Regarding any program or activity subject to this subpart, the recipient has primary responsibility to ensure compliance with the Act and this subpart. The recipient also has responsibility to maintain records, provide information, and to afford access to its records to the Department to the extent required to determine whether it is in compliance with the Act.

§ 42.721 Notice to subrecipients.

Any recipient that receives federal financial assistance from the Department and extends such assistance to subrecipients shall give its subrecipients written notice of their obligations under this subpart.

§ 42.722 Recipient assessment of age distinctions.

(a) As part of a compliance review under § 42.730 or complaint investigation under § 42.731, the Department may require a recipient employing the equivalent of 15 or more employees to complete a written self-evaluation, in a manner specified by the responsible Department official, of any age distinction imposed in its program or activity receiving federal financial assistance from the Department to assess the recipient's compliance with the Act.

(b) Whenever a recipient assessment indicates a violation of the Act and this subpart, the recipient shall take corrective action.

§ 42.723 Compliance information.

(a) Upon request by the Department, a recipient shall make available to the Department information necessary to determine whether the recipient is complying with this subpart.

(b) Each recipient shall permit reasonable access by the Department to the recipient's facilities, books, records and other sources of information concerning the recipient's compliance with this subpart.

§ 42.724 Remedial and affirmative action.

(a) If the Department finds that, in violation of this subpart, a recipient has discriminated on the basis of age, the recipient shall take remedial action that the Department considers necessary to overcome the effects of the discrimination.

(b) Even in the absence of a finding of discrimination, a recipient, in administering a program or activity, may take steps to overcome the effects of conditions that resulted in limited participation on the basis of age.

§ 42.725 Assurance of compliance.

Each recipient of federal financial assistance from the Department shall sign a written assurance as specified by the Department that it will comply with this subpart in its federally assisted programs or activities.

§§ 42.726–42.729 [Reserved]

COMPLIANCE PROCEDURES

§ 42.730 Compliance reviews.

The Department may conduct a pre-award or post-award compliance review of an applicant or a recipient to determine compliance with this subpart. When a compliance review indicates probably noncompliance, the Department shall inform the applicant or recipient and shall promptly begin enforcement as described in § 42.733.

§ 42.731 Complaints.

(a) *General*. This section provides for the filing, by aggrieved persons, of complaints alleging violation of this subpart. Although the complaint process is limited to aggrieved persons, any person who has information regarding a possible violation of this subpart may provide it to the Department.

(b) *Receipt of complaints*. (1) Any aggrieved person, individually or as a member of a class, may file with the Department a written complaint alleging a violation of this subpart. A complaint may be filed by a representative of an aggrieved person. A complaint must be filed within 180 days of the date the complaint first knew of the alleged violation. However, this time limit may, for good cause shown, be extended by the Department.

(2) The Department shall promptly review each such complaint for sufficiency. A complaint will be deemed sufficient if it—

(i) Describes an action that may constitute a violation of this subpart; and

(ii) Contains information necessary for further processing (i.e., identifies the parties involved, states the date when the complainant first learned of the alleged violation, and is signed by the complainant).

(3) When a complaint is deemed sufficient, the Department shall promptly refer it to the FMCS for mediation.

(4) When a complaint is deemed insufficient, the Department shall advise the complainant of the reasons for that determination. A complainant shall be freely permitted to add information necessary for further processing.

(c) *Representation of parties*. During each stage of the complaint process, the complainant and the recipient may be represented by an attorney or other representative.

(d) *Assistance from the Department*. Any complainant or recipient may request from the Department information regarding the complaint process.

(e) *Mediation*. (1) When a complaint is referred for mediation, the complainant and the recipient shall participate in the mediation process to the extent necessary either to reach an agreement or to enable the mediator to determine that no agreement can be reached. No determination that an agreement is not possible shall be made until the mediator has conferred at least once, jointly or separately, with each of the parties.

(2) If the complainant and the recipient reach an agreement, they shall reduce the agreement to writing and sign it. The mediator shall send a copy of the agreement to the Department.

(3) If, after 60 days after the Department's receipt of a complaint, no agreement is reached or if, within that 60-day period, the mediator determines that no agreement can be reached, the mediator shall return the complaint to the Department.

(4) The mediator shall protect the confidentiality of information obtained during the mediation process. No mediator shall testify in any adjudicative proceeding, produce any document, or otherwise disclose any information obtained during the mediation process without prior approval of the Director of the FMCS.

(f) *Department investigations*. The Department shall promptly investigate any complaint that is unresolved after mediation or is reopened because of violation of a mediation agreement. An investigation should include a review of the pertinent actions or practices of the recipient and the circumstances under which the alleged discrimination occurred. During an investigation the Department shall take appropriate

steps to obtain informal resolution of the complaint.

(g) *Resolution of matters.* (1) Where, prior to any finding by the Department of probable noncompliance with this subpart, discussions between the Department and the parties result in settlement of a complaint, the Department shall prepare an agreement to be signed by the parties and an authorized official of the Department. A settlement shall not affect the operation of any other enforcement efforts of the Department, including compliance reviews or investigation of other complaints involving the recipient.

(2) If the Department determines that an investigation pursuant to paragraph (f) of this section indicates probable noncompliance with this subpart, the Department shall inform the recipient and shall promptly begin enforcement pursuant to § 42.733.

(3) If the Department determines that an investigation does not indicate probable noncompliance, the Department shall inform the recipient and the complainant. The Department shall also inform the complainant of his or her right to bring a civil action as described in § 42.736.

§ 42.732 Prohibition against intimidation.

A recipient may not intimidate or retaliate against any person who attempts to assert a right secured by the Act and this suppart or who cooperates in any mediation, investigation, hearing, or other aspect of the Department's compliance procedure.

§ 42.733 Enforcement procedures.

(a) *Voluntary compliance.* When a compliance review or complaint investigation results in a finding of probable noncompliance with this subpart, the Department shall attempt to obtain voluntary compliance. An agreement for voluntary compliance shall describe the corrective action to be taken and time limits for such action and shall be signed by the recipient and an authorized official of the Department.

(b) *Means of enforcement*—(1) *General.* (i) The Department may seek to enforce this subpart—

(A) By administrative proceedings that may lead to termination or refusal of federal financial assistance to the particular program or activity; or

(B) By any other means authorized by law. Such other means include lawsuits by the Department of enjoin violations of this subpart.

(ii) To the extent consistent with the Act, the Department, in enforcing this subpart, shall follow the procedures applicable to enforcement of title VI of the Civil Rights Act of 1964.

(2) *Termination of federal financial assistance.* With regard to enforcement of this subpart through the termination or refusal of federal financial assistance, the Department shall follow the provisions of its title VI regulation concerning notice (28 CFR 42.180(c)), hearings (28 CFR 42.109), and decisions (28 CFR 42.110). However, with respect to programs or activities receiving federal financial assistance from a component of the Department's Office of Justice Programs (OJP), the requirement of 28 CFR 42.110(e) that a sanction be approved by the Attorney General shall not apply; that function may be performed by the Assistant Attorney General, OJP.

(3) *Other means of enforcement.* With regard to enforcement of this subpart through other means, the Department shall follow the procedures of 28 CFR 42.108(d). In addition, at least 30 days before commencing a lawsuit or taking other action pursuant to paragraph (b)(1)(i)(A) of this section, the Department shall send an appropriate report to the committees of the House of Representatives and the Senate having legislative jurisdiction over the program or activity involved.

(c) *Deferral.* When a proceeding for the termination or refusal or federal financial assistance is initiated pursuant to paragraph (b)(1)(i)(A) of this section, the Department may defer granting new federal financial assistance to the recipient.

(1) New federal financial assistance includes any assistance for which, during the deferral period, the Department requires an application or approval, including renewal or continuation of existing activities or authorization of new activities. New federal financial assistance does not include assistance approved prior to initiation of the administrative proceeding or increases in

funding as a result of a change in the manner of computing formula awards.

(2) A deferral may not begin until the recipient has received a notice of opportunity for a hearing. A deferral may not continue for more than 60 days unless a hearing has begun within that time or the time for beginning the hearing has been extended by mutual consent of the recipient and the Department. A deferral may not continue for more than 30 days after the close of the hearing, unless the hearing results in a finding against the recipient.

§ 42.734 Alternative funding.

When assistance to a recipient is terminated or refused pursuant to § 42.733(b)(1)(i)(A), the Department may disburse the withheld funds directly to an alternate recipient serving the same area (i.e., a public or nonprofit private organization or agency or state or political subdivision of the state). Any such alternate recipient must demonstrate the ability to comply with the requirements of this subpart and to achieve the goals of the federal statute authorizing the assistance.

§ 42.735 Judicial review.

A final decision of the Department in an administrative proceeding pursuant to § 42.733(b)(1)(i)(A) is subject to judicial review as provided in section 306 of the Act, 42 U.S.C. 6105.

§ 42.736 Private lawsuits.

(a) Upon exhausting administrative remedies under the Act, a complainant may file a civil action to enjoin a violation of the Act. Administrative remedies are exhausted if—

(1) 180 days have elapsed since the complainant filed the complaint and the Department has made no finding with regard to the complaint; or

(2) The Department issues a finding, pursuant to § 42.731(g)(3), in favor of the recipient.

(b) Whenever administrative remedies are exhausted in accord with paragraph (a) of this section, the Department shall promptly inform the complainant that

(1) The complainant may bring a civil action in a United States district court for the district in which the recipient is located or transacts business;

(2) A complainant who prevails in such an action has the right to be awarded reasonable attorney's fees, if the complainant demands such an award in the complaint initiating the lawsuit;

(3) Before commencing the action, the complainant must give 30 days' notice by registered mail to the Secretary, the Attorney General, and the recipient;

(4) The notice must state the nature of the alleged violation, the relief requested, the court in which the action will be brought, and whether attorney's fees will be demanded; and

(5) The complainant may not bring an action if the same alleged violation by the recipient is the subject of a pending action in any court of the United States.

§§ 42.737–42.799 [Reserved]

APPENDIX A TO SUBPART I OF PART 42—FEDERAL FINANCIAL ASSISTANCE ADMINISTERED BY THE DEPARTMENT OF JUSTICE TO WHICH THIS SUBPART APPLIES

NOTE: Failure to list a type of federal assistance in appendix A shall not mean, if the Age Discrimination Act is otherwise applicable, that a program or activity is not covered. For the text of appendix A to subpart I, see appendix A to subpart C of this part.

APPENDIX B TO SUBPART I OF PART 42—AGE DISTINCTIONS IN FEDERAL STATUTES OR REGULATIONS AFFECTING FINANCIAL ASSISTANCE ADMINISTERED BY THE DEPARTMENT OF JUSTICE

Section 90.31(f) of HHS' the general regulations (45 CFR part 90) requires each federal agency to publish an appendix to its final regulation containing a list of age distinctions in federal statutes and regulations affecting financial assistance administered by the agency. This appendix is the Department's list of federal statutes and Department regulations that contain age distinctions that:

(1) Provide benefits or assistance to persons based upon age; or

(2) Establish criteria for participation in age-related terms; or

(3) Describe intended beneficiaries or target groups in age-related terms.

The Department administers financial assistance under the Juvenile Justice and Delinquency Prevention Act of 1974, as amended (42 U.S.C. 5601–5672). This statute reflects

the basic distinction between criminal justice systems for adults and juvenile justice systems, and the entire statute is predicated upon making distinctions on the basis of age between juveniles and adults. Such age distinctions are set forth throughout this statute, including provisions establishing programs of financial assistance to juvenile justice systems and for purposes related to the prevention of juvenile delinquency. The Department's current regulations pertaining to formula grants under this statute are set forth at 28 CFR part 31 (CFDA No. 16.540). In order to implement the statutory purposes, these regulations reflect the same age distinctions between juveniles and adults as are contained in the statute. The same statute also provides for discretionary special emphasis grants for which there are program announcements issued (CFDA No. 16.541), and this program also necessarily reflects the basic statutory distinction based on age.

The Department is authorized to extend financial assistance under the Missing Children's Assistance Act, as amended (42 U.S.C. 5771–5777). This law is concerned with problems related to missing children, and, thus, it contains many age-related references to children, including references in connection with the provision of financial assistance. Program announcements are issued in connection with this program (CFDA No. 16.543).

The Department is authorized to extend financial assistance pursuant to the Omnibus Crime Control and Safe Streets Act of 1968, as amended (42 U.S.C. 3701–3797). Among the statutory purposes of this law is the provision of grants addressing problems related to juvenile delinquency and problems related to crimes committed against elderly persons. Accordingly, this law also reflects the basic distinction between criminal justice systems for adults and juvenile justice systems. This law also singles out elderly persons as a special target group to benefit from its programs. The Department's regulations concerning block grants authorized under this statute are set forth at 28 CFR part 33. These regulations reflect the statutory authorizations for such block grants, which specifically authorize funds for, among other things, programs addressing problems related to juvenile delinquency and programs addressing the problem of crimes committed against elderly persons (CFDA No. 16.573). Similarly, the statute provides for discretionary grants to enhance and complement the block grants (CFDA No. 16.574) and has been amended to provide a focus on narcotics control (CFDA No. 16.580).

The Department is authorized to extend financial assistance under the Victims of Crime Act of 1984, as amended (42 U.S.C. 10601–10604). Among other things, in order to qualify for funds under one grant program, a state must certify that priority will be given to eligible crime victim assistance programs that help victims of certain crimes, including child abuse. In addition, among the services to victims of crime for which funding is available is ''short term child care services'' (CFDA Nos. 16.575 and 16.576).

The Department is authorized to make grants to Native American Indian tribes with funds reserved to the Office of Victims of Crime under the Victims of Crime act of 1984, as amended (42 U.S.C. 10601(g)). The primary purpose of the funding is to assist Native American Indian tribes with handling child abuse cases, particularly child sexual abuse (CFDA No. 16.583).

The Department is authorized to extend financial assistance to state and local authorities for narcotics control under the Anti-Drug Abuse Act of 1988 (Pub. L. 100–690, 102 Stat. 4181), which extends and/or modifies each of the previously noted laws. The statute reflects the basic distinction between criminal justice systems for adults and juveniles (CFDA Nos. 16.579 and 16.582).