AUTHENTICATED
U.S. GOVERNMENT
INFORMATION
GPO

Title 40—Protection of Environment

(This book contains part 790 to End)

	Part
CHAPTER I—Environmental Protection Agency (Continued)	790
CHAPTER IV—Environmental Protection Agency and Department of Justice	1400
CHAPTER V—Council on Environmental Quality	1500
CHAPTER VI—Chemical Safety and Hazard Investigation Board	1600
CHAPTER VII—Environmental Protection Agency and Department of Defense; Uniform National Discharge Standards for Vessels of the Armed Forces	1700

CHAPTER I—ENVIRONMENTAL PROTECTION AGENCY (CONTINUED)

EDITORIAL NOTE: Nomenclature changes to chapter I appear at 65 FR 47324, 47325, Aug. 2, 2000, and 66 FR 34375, 34376, June 28, 2001.

SUBCHAPTER R—TOXIC SUBSTANCES CONTROL ACT (CONTINUED)

Part		*Page*
790	Procedures governing testing consent agreements and test rules	5
791	Data reimbursement	26
792	Good laboratory practice standards	33
795	Provisional test guidelines	46
796	Chemical fate testing guidelines	80
797	Environmental effects testing guidelines	101
798	Health effects testing guidelines	141
799	Identification of specific chemical substance and mixture testing requirements	226

SUBCHAPTERS S–T [RESERVED]

SUBCHAPTER U—AIR POLLUTION CONTROLS

1039	Control of emissions from new and in-use nonroad compression-ignition engines	476
1048	Control of emissions from new, large nonroad spark-ignition engines	550
1051	Control of emissions from recreational engines and vehicles	612
1065	Test procedures and equipment	673
1068	General compliance provisions for nonroad programs	816

SUBCHAPTER R—TOXIC SUBSTANCES CONTROL ACT (CONTINUED)

PART 790—PROCEDURES GOVERNING TESTING CONSENT AGREEMENTS AND TEST RULES

Subpart A—General Provisions

Sec.
790.1 Scope, purpose, and authority.
790.2 Applicability.
790.3 Definitions.
790.5 Submission of information.
790.7 Confidentiality.

Subpart B—Procedures for Developing Consent Agreements and Test Rules

790.20 Recommendation and designation of testing candidates by the ITC.
790.22 Procedures for gathering information and negotiating consent agreements on chemicals which the ITC has recommended for testing with an intent to designate.
790.24 Criteria for determining whether a consensus exists concerning the provisions of a draft consent agreement.
790.26 Initiation and completion of rulemaking proceedings on ITC-designated chemicals.
790.28 Procedures for developing consent agreements and/or test rules for chemicals that have not been designated or recommended with intent to designate by the ITC.

Subpart C—Implementation, Enforcement, and Modification of Test Rules

790.40 Promulgation of test rules.
790.42 Persons subject to a test rule.
790.45 Submission of letter of intent to conduct testing or exemption application.
790.48 Procedure if no one submits a letter of intent to conduct testing.
790.50 Submission of study plans.
790.52 Phase II test rule.
790.55 Modification of test standards or schedules during conduct of test.
790.59 Failure to comply with a test rule.

Subpart D—Implementation, Enforcement and Modification of Consent Agreements

790.60 Contents of consent agreements.
790.62 Submission of study plans and conduct of testing.
790.65 Failure to comply with a consent agreement.
790.68 Modification of consent agreements.

Subpart E—Exemptions From Test Rules

790.80 Submission of exemption applications.
790.82 Content of exemption application.
790.85 Submission of equivalence data.
790.87 Approval of exemption applications.
790.88 Denial of exemption application.
790.90 Appeal of denial of exemption application.
790.93 Termination of conditional exemption.
790.97 Hearing procedures.
790.99 Statement of financial responsibility.
APPENDIX A TO SUBPART E—SCHEDULE FOR DEVELOPING CONSENT AGREEMENTS AND TEST RULES

AUTHORITY: 15 U.S.C. 2603.

Subpart A—General Provisions

§ 790.1 Scope, purpose, and authority.

(a) This part establishes procedures for gathering information, conducting negotiations, and developing and implementing test rules or consent agreements on chemical substances and mixtures under section 4 of TSCA.

(b) Section 4 of the Act authorizes EPA to require manufacturers and processors of chemical substances and mixtures to test these chemicals to determine whether they have adverse health or environmental effects. Section 4 (a) empowers the Agency to promulgate rules which require such testing. In addition, EPA has implied authority to enter into enforceable consent agreements requiring testing where they provide procedural safeguards equivalent to those that apply where testing is conducted by rule.

(c) EPA intends to use enforceable consent agreements to accomplish testing where a consensus exists among EPA, affected manufacturers and/or processors, and interested members of the public concerning the need for and scope of testing. If such a consensus does not exist and the Agency believes that it can make the findings specified in section 4(a), EPA will initiate proceedings to promulgate test rules which will be codified in part 799 of this chapter.

(d) Appendix A to this part presents timetables for various steps in the evaluation of chemicals under consideration for testing, the initiation and completion of negotiations to develop consent agreements, and the proposal and promulgation of test rules. All deadlines which are imposed by the Act are binding on EPA and will be observed by the Agency. The remaining deadlines represent target dates that EPA intends to meet.

[51 FR 23712, June 30, 1986]

§ 790.2 Applicability.

This part is applicable to manufacturers and processors of chemical substances or mixtures who are subject to the testing requirements of a consent agreement or a rule under section 4(a) of the Act. The procedures for test rules are applicable to each test rule in part 799 or this chapter unless otherwise stated in specific test rules in part 799 of this chapter.

[51 FR 23712, June 30, 1986]

§ 790.3 Definitions.

Terms defined in the Act and not explicitly defined herein are used with the meaning given in the Act. For the purpose of this part:

Act means the Toxic Substances Control Act, 15 U.S.C. 2601 *et seq.*

Additive means a chemical substance that is intentionally added to another chemical substance to improve its stability or impart some other desirable quality.

Chemical means a chemical substance or mixture.

Consortium means an association of manufacturers and/or processors who have made an agreement to jointly sponsor testing.

EPA means the U.S. Environmental Protection Agency.

Equivalence data means chemical data or biological test data intended to show that two substances or mixtures are equivalent.

Equivalent means that a chemical substance or mixture is able to represent or substitute for another in a test or series of tests, and that the data from one substance can be used to make scientific and regulatory decisions concerning the other substance.

Exemption means an exemption from a testing requirement of a test rule promulgated under section 4 of the Act and part 799 of this chapter.

Impurity means a chemical substance which is uninitentionally present with another chemical substance.

Joint sponsor means a person who sponsors testing pursuant to section 4(b)(3)(A) of the Act.

Joint sponsorship means the sponsorship of testing by two or more persons in accordance with section

4(b)(3)(A) of the Act.

Person means an individual, partnership, corporation, association, scientific or academic establishment, or organizational unit thereof, and any other legal entity.

Principal sponsor means an individual sponsor or the joint sponsor who assumes primary responsibility for the direction of a study and for oral and written communication with EPA.

Protocol means the plan and procedures which are to be followed in conducting a test.

Reimbursement period refers to a period that begins when the data from the last non-duplicative test to be completed under a test rule are submitted to EPA and ends after an amount of time equal to that which had been required to develop data or after five years, whichever is later.

Sponsor means the person or persons who design, direct and finance the testing of a substance or mixture.

Test substance means the form of chemical substance or mixture that is specified for use in testing.

[49 FR 39782, Oct. 10, 1984, as amended at 51 FR 23712, June 30, 1986]

§ 790.5 Submission of information.

(a) All submissions to EPA under this part must bear the Code of Federal Regulations (CFR) section number of the subject chemical test rule, or indicate the identity of the consent agreement. For all submissions under this part, six copies must be provided to EPA.

(b) Submissions containing both confidential business information or nonconfidential business information must be addressed to the Document Control Office (DCO) (7407M), Office of Pollution Prevention and Toxics (OPPT),

Environmental Protection Agency, 1200 Pennsylvania Ave., NW., Washington, DC 20460–0001, ATTN: TSCA Section 4.

[50 FR 20656, May 17, 1985, as amended at 51 FR 23712, June 30, 1986; 58 FR 34205, June 23, 1993; 60 FR 31922, June 19, 1995; 60 FR 34466, July 3, 1995; 71 FR 33642, June 12, 2006]

§ 790.7 Confidentiality.

(a) Any person subject to the requirements of a consent agreement or a test rule under section 4 of the Act may assert a claim of confidentiality for certain information submitted to EPA in response to the consent agreement or the test rule. Any information claimed as confidential will be treated in accordance with the procedures in part 2 of this title and section 14 of the Act. Failure to assert a claim of confidentiality at the time the information is submitted will result in the information being made available to the public without further notice to the submitter.

(b) A claim of confidentiality must be asserted by circling or otherwise marking the specific information claimed as confidential and designating it with the words ''confidential business information,'' ''trade secret,'' or another appropriate phrase indicating its confidential character.

(c) If a person asserts a claim of confidentiality for study plan information described in §§ 790.50(c)(1)(iii)(D), (iv), (v), and (vi) and 790.62(b)(6), (7), (8), (9), and (10), the person must provide a detailed written substantiation of the claim by answering the questions in this paragraph. Failure to provide written substantiation at the time the study plan information is submitted will be considered a waiver of the claim of confidentiality, and the study plan information will be disclosed to the public without further notice.

(1) Would disclosure of the study plan information disclose processes used in the manufacture or processing of a chemical substance or mixture? Describe how this would occur.

(2) Would disclosure of the study plan information disclose the portion of a mixture comprised by any of the substances in the mixture? Describe how this would occur.

(3) What harmful effects to your competitive position, if any, do you think would result from disclosure of this information? How would a competitor use such information? How substantial would the harmful effects be? What is the causal relationship between disclosure and the harmful effects?

(4) For what period of time should confidential treatment be given? Until a specific date, the occurrence of a specific event, or permanently? Why?

(5) What measures have you taken to guard against disclosure of this information to others?

(6) To what extent has this information been disclosed to others? What precautions have been taken in connection with such disclosures?

(7) Has this information been disclosed to the public in any forms? Describe the circumstances.

(8) Has the information been disclosed in a patent?

(9) Has EPA, another Federal agency, or any Federal court made any pertinent confidentiality determination regarding this information? If so, copies of such determinations must be included in the substantiation.

(d) If the substantiation provided under paragraph (c) of this section contains information which the submitter considers confidential, the submitter must assert a separate claim of confidentiality for that information at the time of submission in accordance with paragraph (b) of this section.

[49 FR 39782, Oct. 10, 1984, as amended at 51 FR 23713, June 30, 1986]

Subpart B—Procedures for Developing Consent Agreements and Test Rules

SOURCE: 51 FR 23713, June 30, 1986, unless otherwise noted.

§ 790.20 Recommendation and designation of testing candidates by the ITC.

(a) *Recommendations with intent to designate.* The ITC has advised EPA that it will discharge its responsibilities under section 4(e) of the Act in the following manner:

(1) When the ITC identifies a chemical substance or mixture that it believes should receive expedited consideration by EPA for testing, the ITC

may add the substance or mixture to its list of chemicals recommended for testing and include a statement that the ITC intends to designate the substance or mixture for action by EPA in accordance with section 4(e)(1)(B) of the Act.

(2) Chemical substances or mixtures selected for expedited review under paragraph (a)(1) of this section may, at a later time, be designated for EPA action within 12 months of such designation. The ITC's subsequent decision would be based on the ITC's review of TSCA sections 8(a) and 8(d) data and other relevant information.

(3) Where the ITC concludes that a substance or mixture warrants testing consideration but that expedited EPA review of testing needs is not justified, the ITC will add the substance or mixture to its list of testing recommendations without expressing an intent to designate the substance or mixture for EPA action in accordance with section 4(e)(1)(B) of the Act.

(4) The ITC reserves its right to designate any chemical that it determines the Agency should, within 12 months of the date first designated, initiate a proceeding under section 4(a) of the Act.

(b) *EPA consideration of ITC recommendations.* (1) Where a substance or mixture is designated for EPA action under section 4(e)(1)(B) of the Act, the Agency will take either one of the following actions within 12 months after receiving the ITC designation:

(i) Initiate rulemaking proceedings under section 4(a) of the Act.

(ii) Publish a FEDERAL REGISTER notice explaining the Agency's reasons for not initiating such rulemaking proceedings. EPA may conclude that rulemaking proceedings under section 4(a) of the Act are unnecessary if it determines that the findings specified in section 4(a) of the Act cannot be made or if the Agency has entered into a consent agreement requiring testing in accordance with the provisions of this subpart.

(2) Where a substance or mixture has been recommended for testing by the ITC without an intent to designate, EPA will use its best efforts to act on the ITC's recommendations as rapidly as possible consistent with its other priorities and responsiblities. EPA may respond to the ITC's recommendations either by:

(i) Initiating rulemaking proceedings under section 4(a) of the Act.

(ii) Publishing a FEDERAL REGISTER notice explaining the Agency's reasons for concluding that testing is unnecessary.

(iii) Entering into a consent agreement in accordance with this subpart.

§ 790.22 Procedures for gathering information and negotiating consent agreements on chemicals which the ITC has recommended for testing with an intent to designate.

(a) *Preliminary EPA evaluation.* Following receipt of an ITC report containing a recommendation with an intent to designate, EPA will use the following procedure for completing a preliminary evaluation of testing needs. Appendix A[1] to this part presents the schedule that EPA intends to follow for this purpose.

(1) EPA will publish the ITC report in the FEDERAL REGISTER and announce that interested persons have 30 days to submit comments on the ITC's testing recommendations.

(2) EPA will publish a FEDERAL REGISTER notice adding all ITC-recommended chemicals to the automatic reporting provisions of its rules under sections 8(a) and 8(d) of the Act (40 CFR parts 712 and 716).

(3) EPA will hold a public ''focus meeting'' to discuss the ITC's testing recommendations and obtain comments and information from interested parties.

(4) EPA will evaluate submissions received under the sections 8(a) and 8(d) reporting requirements, comments filed on the ITC's recommendations, and other information and data compiled by the Agency.

(5) EPA will make a preliminary staff determination of the need for testing and, where testing appears warranted, will tentatively select the studies to be performed.

(6) EPA will hold a public meeting to announce its preliminary testing determinations.

[1] Editorial Note: Appendix A appears at the end of subpart E.

(b) *Negotiation procedures for consent agreements.* Where EPA believes that testing is necessary, the Agency will explore whether a consent agreement can be negotiated that satisfies the testing needs identified by the Agency. EPA will use the following procedures for negotiating, formulating and accepting consent agreements. Appendix A[1] to this part presents the schedule that EPA intends to follow for this purpose.

(1) In the FEDERAL REGISTER notice described in paragraph (a)(1) of this section, EPA will explain its procedures and timetable for negotiating consent agreements and invite persons interested in participating in or monitoring negotiations to contact the Agency in writing.

(2) Persons who respond to EPA's notice by the announced date of the Agency's course-setting meeting will be deemed ''interested parties'' for purposes of any negotiations that EPA conducts.

(3) Following the course-setting meeting announcing EPA's preliminary testing determinations, the Agency will meet with manufacturers, processors and other interested parties for the purpose of attempting to negotiate a consent agreement. To facilitate attendance at these meetings, EPA will contact all interested parties who have expressed a desire to participate in or monitor negotiations under paragraph (b)(2) of this section and advise them of meeting dates.

(4) All negotiating meetings will be open to members of the public. The minutes of each meeting will be prepared by EPA. Meeting minutes, testing proposals, background documents and other materials exchanged at or prepared for negotiating meetings will be included in the public file established by EPA on each ITC-recommended chemical. Materials in this file will be made available for inspection in the OPPTS Reading Room during EPA working hours.

(5) While negotiations are underway, EPA will promptly circulate meeting minutes, testing proposals, correspondence and other relevant materials to interested parties who expressed a desire to participate in or monitor negotiations pursuant to paragraph (b)(2) of this section.

(6) As negotiations progress, EPA will make a tentative decision either to proceed with formulation of a consent agreement or to initiate rulemaking. EPA will terminate negotiations after 10 weeks and proceed with rulemaking unless negotiations are likely to result in a draft consent agreement within 4 additional weeks. By the end of this 4-week period, EPA either will have prepared a draft consent agreement reflecting the apparent consensus of the parties or will terminate negotiations and proceed with rulemaking. If EPA decides to proceed with rulemaking, no further opportunity for negotiations will be provided. EPA will promptly send written notice to all interested parties of the termination of negotiations.

(7) Where EPA prepares a draft consent agreement, it will be circulated for comment to all interested parties who expressed a desire to participate in or monitor negotiations under paragraph (b)(2) of this section. A period of 4 weeks will be provided for submitting comments or written objections under § 790.24(a).

(8) If necessary, EPA will hold a public meeting to discuss comments on the draft consent agreement and to determine whether revisions in the agreement are appropriate.

(9) Where a consensus exists concerning the contents of a draft consent agreement, it will be circulated to EPA management and interested parties for final approval and signature.

(10) Upon final approval of a consent agreement, EPA will publish a FEDERAL REGISTER notice that summarizes the agreement, describes the ITC recommendations for the test substance, outlines the chemical's use and exposure characteristics, and explains the background, objectives and rationale of the testing to be conducted, and codifies in subpart C of part 799 the name of the substance(s) to be tested and the citation to the FEDERAL REGISTER notice of the agreement.

§ 790.24 Criteria for determining whether a consensus exists concerning the provisions of a draft consent agreement.

(a) EPA will enter into consent agreements only where there is a consensus among the Agency, one or more manufacturers and/or processors who agree to conduct or sponsor the testing, and all other interested parties who identify themselves in accordance with § 790.22(b)(2). EPA will not enter into a consent agreement in either of the following circumstances:

(1) EPA and affected manufacturers and/or processors cannot reach a consensus on the testing requirements or other provisions to be included in the consent agreement.

(2) A draft consent agreement is considered inadequate by other interested parties who, pursuant to § 790.22(b)(2), have asked to participate in or monitor negotiations; and these parties have submitted timely written objections to the draft consent agreement which provide a specific explanation of the grounds on which the draft agreement is objectionable.

(b) EPA may reject objections described in paragraph (a)(2) of this section only where the Agency concludes the objections are either:

(1) Not made in good faith.

(2) Untimely.

(3) Do not involve the adequacy of the proposed testing program or other features of the agreement that may affect EPA's ability to fulfill the goals and purposes of the Act.

(4) Not accompanied by a specific explanation of the grounds on which the draft agreement is considered objectionable.

(c) The unwillingness of some manufacturers and/or processors of a prospective test chemical to sign the draft consent agreement does not, in itself, establish a lack of consensus if EPA concludes that those manufacturers and/or processors who are prepared to sign the agreement are capable of accomplishing the testing to be required and that the draft agreement will achieve the purposes of the Act in all other respects.

§ 790.26 Initiation and completion of rulemaking proceedings on ITC-designated chemicals.

(a) Where EPA concludes that a consensus does not exist concerning the provisions of a draft consent agreement and that the findings specified by section 4(a) can be made, the Agency will proceed with rulemaking under section 4(a) of TSCA.

(b) When EPA decides to proceed with rulemaking under paragraph (a) of this section, the Agency intends to publish a rulemaking proposal and a final rule or a notice terminating the rulemaking proceeding in accordance with the schedule specified in Appendix A[1] to this part.

(c) Where the testing recommendations of the ITC raise unusually complex and novel issues that require additional Agency review and opportunity for public comment, the Agency may publish an Advance Notice of Proposed Rulemaking (ANPR). The schedule that EPA intends to follow for rulemaking proceedings initiated by publication of an ANPR is presented in appendix A[1] to this part.

§ 790.28 Procedures for developing consent agreements and/or test rules for chemicals that have not been designated or recommended with intent to designate by the ITC.

(a) Where EPA believes that testing is needed, it may also develop consent agreements and/or test rules on chemical substances or mixtures that either:

(1) Have been recommended but not ''recommended with intent to designate'' by the ITC.

(2) Have been selected for testing consideration by EPA on its own initiative.

(b) When EPA wishes to initiate negotiations concerning chemicals described in paragraph (a) of this section, it will publish a FEDERAL REGISTER notice describing its tentative evaluation of testing needs, announcing a date for a public course-setting meeting, and inviting persons interested in participating in or monitoring negotiations to

[1] Editorial Note: Appendix A appears at the end of subpart E.

contact the Agency in writing. Any negotiations that EPA conducts will conform to the procedures specified in § 790.22(b) and, to the extent feasible, will follow the schedules presented in appendix A[1] to this part.

(c) EPA will enter into consent agreements on chemicals described in paragraph (a) of this section only if there is a consensus among EPA, affected manufacturers and/or processors, and any other persons who have asked to participate in or monitor negotiations. In determining whether such a consensus exists, EPA will employ the criteria specified in § 790.24. In the absence of consensus, EPA will initiate rulemaking if it concludes that the findings specified in section 4(a) of the Act can be made. The schedule for initiating and completing such rulemaking proceedings will, to the extent feasible, follow the schedule specified in appendix A[1] to this part.

Subpart C—Implementation, Enforcement, and Modification of Test Rules

SOURCE: 50 FR 20657, May 17, 1985, unless otherwise noted. Redesignated at 51 FR 23713, June 30, 1986.

§ 790.40 Promulgation of test rules.

(a) If EPA determines that it is necessary to test a chemical substance or mixture by rule under section 4 of the Act, it will promulgate a test rule in part 799 of this chapter.

(b) EPA will promulgate specific test rules in part 799 of this chapter either by a single-phase rulemaking procedure or by a two-phase rulemaking procedure.

(1) Under single-phase test rule development, EPA will promulgate a test rule in part 799 of this chapter through a notice and comment rulemaking which specifies the following:

(i) Identification of the chemical for which testing is required under the rule.

(ii) The health or environmental effect or effects or other characteristics for which testing is being required.

(iii) Which test substance(s) must be tested.

(iv) Standards for the development of test data.

(v) The EPA Good Laboratory Practice requirements for the required testing.

(vi) Schedule for submission of interim reports and/or final reports to EPA.

(vii) Who must submit either letters of intent to conduct testing or exemption applications.

(viii) What types of data EPA will examine in determining equivalence if more than one test substance is to be tested.

(2) Under two-phase test rule development, EPA will promulgate a Phase I test rule in part 799 of this chapter through a notice and comment rulemaking which specifies the following:

(i) Identification of the chemical for which testing is required under the rule.

(ii) The health or environmental effect or effects or other characteristics for which testing is being required.

(iii) Which test substance(s) must be tested.

(iv) A reference to appropriate guidelines for the development of test data.

(v) The EPA Good Laboratory Practice requirements for the required testing.

(vi) Who must submit either letters of intent to conduct testing and study plans, or exemption applications.

(vii) What types of data EPA will examine in determining equivalence if more than one test substance is to be tested.

(3) Under two-phase test rule development, test standards and schedules will be developed in a second phase of rulemaking as described in §§ 790.50 and 790.52.

[50 FR 20657, May 17, 1985. Redesignated and amended at 51 FR 23713, June 30, 1986; 54 FR 36313, Sept. 1, 1989]

§ 790.42 Persons subject to a test rule.

(a) Each test rule described in § 790.40 will specify whether manufacturers, processors, or both are subject to the requirement for testing of the subject chemical under section 4(b)(3)(B) of the

[1] Editorial Note: Appendix A appears at the end of subpart E.

Act and will indicate who will be required to submit letters of intent to conduct testing.

(1) If testing is being required to allow evaluation of risks:

(i) Primarily associated with manufacture of the chemical, or

(ii) Associated with both manufacturer and processing of the chemical, or

(iii) Associated with distribution in commerce, use, and/or disposal activities concerning the chemical, each manufacturer of the chemical will be subject and must comply with the requirements of the test rule.

(2) While legally subject to the test rule in circumstances described in paragraphs (a)(1) (ii) and (iii) of this section, processors of the chemical must comply with the requirements of the test rule only if processors are directed to do so in a subsequent notice as set forth in § 790.48(b).

(3) If testing is being required to allow evaluation of risks associated solely with processing of the chemical, processors will be subject and must comply with the requirements of the test rule.

(4) While legally subject to the test rule in circumstances described in paragraph (a)(1) of this section, persons who manufacture less than 500 kg (1,100 lb) of the chemical annually during the period from the effective date of the test rule to the end of the reimbursement period, must comply with the requirements of the test rule only if such manufacturers are directed to do so in a subsequent notice as set forth in § 790.48, or if directed to do so in a particular test rule.

(5) While legally subject to the test rule in circumstances described in paragraph (a)(1) of this section, persons who manufacture small quantities of the chemical solely for research and development (meaning quantities that are not greater than those necessary for purposes of scientific experimentation or analysis or chemical research on, or analysis of, such chemical or another chemical, including such research or analysis for development of a product) from the effective date of the test rule to the end of the reimbursement period, must comply with the requirements of the test rule only if such manufacturers are directed to do so in subsequent notice set forth in § 790.48, or if directed to do so in a particular test rule.

(6) If testing is being required to allow evaluation of risks associated primarily with manufacture of a chemical for research and development (R & D) purposes, manufacturers of the chemical for R & D will be subject and must comply with the requirements of the test rule.

(b) [Reserved]

[50 FR 20657, May 17, 1985. Redesignated at 51 FR 23713, June 30, 1986, and amended at 55 FR 18884, May 7, 1990]

§ 790.45 Submission of letter of intent to conduct testing or exemption application.

(a) No later than 30 days after the effective date of a test rule described in § 790.40, each person subject to that rule and required to comply with the requirements of that rule as provided in § 790.42(a) must, for each test required, either notify EPA by letter of his or her intent to conduct testing or submit to EPA an application for an exemption from testing requirements for the test.

(b) EPA will consider letters of intent to test as commitments to sponsor the tests for which they are submitted unless EPA agrees to the substitution of an exemption application in instances where more than one person indicates an intent to sponsor equivalent tests.

(c) Each letter of intent to conduct testing must include:

(1) Identification of test rule.

(2) Name, address, and telephone number of the firm(s) which will be sponsoring the tests.

(3) Name, address, and telephone number of the appropriate individual to contact for further information.

(4) For sponsors participating in a testing consortium—a list of all members of the consortium, the signature of an authorized representative of each member, and a designation of who is to serve as principal sponsor.

(5) A list of the testing requirements for which the sponsor(s) intends to conduct tests.

(6) If EPA is requiring testing of more than one representative substance—which test substance the sponsor(s) intends to use in each of the tests.

(d)(1) Any person not manufacturing or processing the subject chemical as of the effective date of the test rule describing in § 790.40 or by 30 days after the effective date of the rule who, before the end of the reimbursement period, manufacturers or processes the test chemical and who is subject to and required to comply with the requirements of the test rule must submit the letter of intent to test or an exemption application required by paragraph (a) of this section by the date manufacture or processing begins, or

(2) When both manufacturers and processors are subject to the rule, any person not processing the subject chemical as of the effective date of the test rule described in § 790.40 or by 30 days after publication of the FEDERAL REGISTER notice described in § 790.48(b)(2) who, before the end of the reimbursement period, processes the test chemical and who is required to comply with the requirements of the rule must submit the letter of intent to test or an exemption application required by § 790.48(b)(3) of the date processing begins.

(e) Manufacturers subject to a test rule described in § 790.40 who do not submit to EPA either a letter of their intent to conduct tests or a request for an exemption from testing for each test for which testing is required in the test rule will be considered in violation of that rule beginning on the 31st day after the effective date of the test rule described in § 790.40 or on the date manufacture begins as described in paragraph (d) of this section.

(f) Processors subject to a test rule described in § 790.40 and required to comply with the requirements of test rule pursuant to § 790.42(a)(2) or a FEDERAL REGISTER notice as described in § 790.48(b)(2) who do not submit to EPA either a letter of their intent to conduct tests or a request for an exemption for each test for which testing is required in the test rule will be considered in violation of that rule beginning on the 31st day after the effective date of the test rule described in § 790.40 or 31 days after publication of the FEDERAL REGISTER notice described in § 790.48(b)(2) or on the date processing begins as described in paragraph (d) of this section, as appropriate.

§ 790.48 Procedure if no one submits a letter of intent to conduct testing.

(a) *If only manufacturers are subject to the rule.* (1) This paragraph applies if testing is being required solely to allow evaluation of risks associated with manufacturing and the test rule described in § 790.40 states that manufacturers only are responsible for testing.

(2) If no manufacturer subject to the test rule has notified EPA of its intent to conduct one or more of the required tests within 30 days after the effective date of the test rule described in § 790.40, EPA will notify all manufacturers, including those described in § 790.42(a)(4) and (a)(5), by certified mail or by publishing a notice of this fact in the FEDERAL REGISTER specifying the tests for which no letter of intent has been submitted and will give such manufacturers an opportunity to take corrective action.

(3) If no manufacturer submits a letter of intent to conduct one or more of the required tests within 30 days after receipt of the certified letter or publication of the FEDERAL REGISTER notice described in paragraph (a)(2) of this section, all manufacturers subject to the rule will be in violation of the test rule from the 31st day after receipt of the certified letter or publication of the FEDERAL REGISTER notice described in this paragraph.

(b) *If manufacturers and processors are subject to the rule.* (1) This paragraph applies if testing is being required to allow evaluation of risks associated with manufacturing and processing or with distribution in commerce, use, or disposal of the chemical and the test rule described in § 790.40 states that manufacturers and processors are responsible for testing.

(2) If no manufacturer subject to the rule has notified EPA of its intent to conduct testing for one or more of the required tests within 30 days after the effective date of the test rule described in § 790.40, EPA will publish a notice in the FEDERAL REGISTER of this fact

specifying the tests for which no letter of intent has been submitted.

(3) No later than 30 days after the date of publication of the FEDERAL REGISTER notice described in paragraph (b)(2) of this section, each person described in § 790.40(a)(4) and (5) and each person processing the subject chemical as of the effective date of the test rule described in § 790.40 or by 30 days after the date of publication of the FEDERAL REGISTER notice described in paragraph (b)(2) of this section must, for each test specified in the FEDERAL REGISTER notice, either notify EPA by letter of his or her intent to conduct testing or submit to EPA an application for an exemption from testing requirements for the test.

(4) If no manufacturer or processor of the test chemical has submitted a letter of intent to conduct one or more of the required tests within 30 days after the date of publication of the FEDERAL REGISTER notice described in paragraph (b)(2) of this section, EPA will notify all manufacturers and processors by certified letter or publish a FEDERAL REGISTER notice of this fact specifying the tests for which no letter of intent has been submitted. This letter or FEDERAL REGISTER notice will give the manufacturers and processors an opportunity to take corrective action.

(5) If no manufacturer or processor submits a letter of intent to conduct one or more of the required tests within 30 days after receipt of the certified letter or publication of the FEDERAL REGISTER notice described in paragraph (b)(4) of this section, all manufacturers and processors subject to the rule will be in violation of the test rule from the 31st day after receipt of the certified letter or publication of the FEDERAL REGISTER notice described in paragraph (b)(4) of this section.

(c) *Only processors are subject to the rule.* (1) This paragraph applies if testing is being required solely to allow evaluation of risks associated with processing and the test rule described in § 790.40 states that only processors are responsible for testing.

(2) If no processor subject to the rule has notified EPA of its intent to conduct one or more of the required tests within 30 days after the effective date of the test rule described in § 790.40, EPA will notify all the processors by certified mail or publish a notice in the FEDERAL REGISTER of this fact, specifying the tests for which no letter of intent has been submitted and give the processors an opportunity to take corrective action.

(3) If no processor submits a letter of intent to conduct one or more of the required tests within 30 days after receipt of the certified letter or publication of the FEDERAL REGISTER notice described in paragraph (c)(2) of this section, all processors subject to the rule will be in violation of the test rule from the 31st day after receipt of the certified letter or publication of the FEDERAL REGISTER notice described in this paragraph.

[50 FR 20657, May 17, 1985. Redesignated at 51 FR 23713, June 30, 1986, and amended at 55 FR 18884, May 7, 1990]

§ 790.50 Submission of study plans.

(a) *Who must submit study plans.* (1) Persons who notify EPA of their intent to conduct tests in compliance with the requirements of a single phase test rule as described in § 790.40(b)(1) must submit study plans for those tests prior to the initiation of each of these tests, unless directed by a particular test rule or consent agreement to submit study plans at a specific time.

(2) Persons who notify EPA of their intent to conduct tests in compliance with the requirements of a Phase I test rule as described in § 790.40(b)(2) must submit the proposed study plans for those tests on or before 90 days after the effective date of the Phase I rule; or, for processors complying with the notice described in § 790.48(b)(2), 90 days after the publication date of that notice; or 60 days after the date manufacture or processing begins as described in § 790.45(d), as appropriate, to the address in § 790.5(b).

(3) Study plans must be prepared according to the requirements of this subpart B and part 792 of this chapter. Only one set of study plans should be prepared and submitted by persons who are jointly sponsoring testing.

(4) Any person subject to a test rule may submit a study plan for any test

required by the rule at any time, regardless of whether the person previously submitted an application for exemption from testing for that test.

(5) Unless EPA has granted an extension of time for submission of proposed study plans, manufacturers who notify EPA that they intend to conduct testing in compliance with the requirements of a Phase I test rule as described in § 790.40(b)(2) and who do not submit proposed study plans for those tests on or before 90 days after the effective date of the Phase I test rule or 60 days after the date manufacture begins as described in § 790.45(d) will be considered in violation of the test rule as if no letter of intent to test had been submitted.

(6) Unless EPA has granted an extension of time for submission of proposed study plans, processors who notify EPA that they intend to conduct testing in compliance with the requirements of a Phase I test rule as described in § 790.40(b)(2) and who do not submit proposed study plans for those tests on or before 90 days after the effective date of the Phase I test rule or 90 days after the publication date of the notice described in § 790.48(b)(2), or 60 days after the date processing begins as described in § 790.45(d), as appropriate, will be considered in violation of the test rule as if no letter of intent to test had been submitted.

(b) *Extensions of time for submission of study plans.* (1) EPA may grant requests for additional time for the development of study plans on a case-by-case basis. Requests for additional time for study plan development must be made in writing to EPA at the address in § 790.5(b). Each extension request must state why EPA should grant the extension.

(2) Under two-phase rulemaking, extension requests must be submitted to EPA within 60 days after the effective date of the Phase I test rule as described in § 790.40(b)(2); or for processors complying with the notice described in § 790.48(b)(2), 60 days after the publication date of that notice; or 30 days after the date manufacture or processing begins as described in § 790.45(d), as appropriate.

(3) EPA will notify the submitter by certified mail of EPA's decision to grant or deny an extension request.

(4) Persons who have been granted an extension of time for submission of study plans as described in paragraph (b)(1) of this section and who do not submit proposed study plans in compliance with the requirements of a Phase I test rule in accordance with the new deadline granted by EPA will be considered in violation of the test rule as if no letter of intent to test had been submitted as described in § 790.45(e) and (f).

(c) *Content of study plans.* (1) All study plans are required to contain the following information:

(i) Identity of the test rule.

(ii) The specific test requirements of that rule to be covered by the study plan.

(iii)(A) The names and addresses of the test sponsors.

(B) The names, addresses, and telephone numbers of the responsible administrative officials and project manager(s) in the principal sponsor's organization.

(C) The name, address, and telephone number of the appropriate individual to contact for oral and written communications with EPA.

(D)(*1*) The names and addresses of the testing facilities and the names, addresses, and telephone numbers of the testing facilities' administrative officials and project manager(s) responsible for the testing.

(*2*) Brief summaries of the training and experience of each professional involved in the study, including study director, veterinarian(s), toxicologist(s), pathologist(s), chemist(s), microbiologist(s), and laboratory assistants.

(iv) Identity and data on the chemical substance(s) being tested, including physical constants, spectral data, chemical analysis, and stability under test and storage conditions, as appropriate.

(v) Study protocol, including the rationale for any combination of test protocols; the rationale for species/strain selection; dose selection (and supporting data); route(s) or method(s) of exposure; description of diet to be used and its source; including nutrients

and contaminants and their concentrations; for *in vitro* test systems, a description of culture medium and its source; and a summary of expected spontaneous chronic diseases (including tumors), genealogy, and life span.

(vi) Schedule for initiation and completion of each short-term test and of each major phase of long-term tests; dates for submission of interim progress and final reports to EPA that are within the reporting deadlines specified by EPA In the final test rule.

(2) Information required in paragraph (c)(1)(iii)(D) of this section is not required in proposed study plans submitted in compliance with the requirements of a Phase I test rule if the information is not available at the time of study plan submission; however, the information must be submitted before the initiation of testing.

(d) *Incomplete study plans.* (1) Upon receipt of a study plan, EPA will review the study plan to determine whether it complies with paragraph (c) of this section. If EPA determines that the study plan does not comply with paragraph (c) of this section, EPA will notify the submitter that the submission is incomplete and will identify the deficiencies and the steps necessary to complete the submission.

(2) The submitter will have 15 days after the day it receives this notice to submit appropriate information to make the study plan complete.

(3) If the submitter fails to provide appropriate information to complete a proposed study plan submitted in compliance with the requirements of a Phase I test rule on or before 15 days after receipt of the notice, the submitter will be considered in violation of the test rule as if no letter of intent to conduct the test had been submitted as described in § 790.45(e) and (f).

(e) *Amendments to study plans.* Test sponsors shall submit all amendments to study plans to the Director, Office of Compliance Monitoring at the address in § 790.5(d).

[50 FR 20657, May 17, 1985. Redesignated and amended at 51 FR 23713, June 30, 1986; 52 FR 36569, Sept. 30, 1987; 54 FR 36313, Sept. 1, 1989; 55 FR 18884, May 7, 1990; 58 FR 34205, June 23, 1993; 60 FR 34466, July 3, 1995]

§ 790.52 Phase II test rule.

(a) If EPA determines that the proposed study plan described in § 790.50(a)(2) complies with § 790.50(c), EPA will publish a proposed Phase II test rule in the FEDERAL REGISTER requesting comments on the ability of the proposed study plan to ensure that data from the test will be reliable and adequate.

(b) EPA will provide a 45-day comment period and will provide an opportunity for an oral presentation upon the request of any person. EPA may extend the comment period if it appears from the nature of the issues raised by EPA's review or from public comments that further comment is warranted.

(c) After receiving and considering public comments on the study plan, EPA will adopt, as proposed or as modified in response to EPA review and public comments, the study protocol section of the study plan, as defined by § 790.50(c)(1)(v) of this chapter, as the test standard for the required testing, and the schedule section of the study plan, as defined by § 790.50(c)(1)(vi) of this chapter, as the schedule for the required testing in a final Phase II test rule.

[50 FR 20657, May 17, 1985. Redesignated at 51 FR 23713, June 30, 1986, and amended at 52 FR 36569, Sept. 30, 1987]

§ 790.55 Modification of test standards or schedules during conduct of test.

(a) *Application.* Any test sponsor who wishes to modify the test schedule for the mandatory testing conditions or requirements (i.e., ''shall statements'') in the test standard for any test required by a test rule must submit an application in accordance with this paragraph. Application for modification must be made in writing to EPA at the address in § 790.5(b), or by phone with written confirmation to follow within 10 working days. Applications must include an appropriate explanation and rationale for the modification. Where a test sponsor requests EPA to provide guidance or to clarify a non-mandatory testing requirement (i.e., ''should statements'') in a test standard, the test sponsor should submit these requests to EPA at the address in § 790.5(b).

(b) *Adoption.* (1) Where EPA concludes that the requested modification of a test standard or schedule for a test required under a test rule is appropriate, EPA will proceed in accordance with this paragraph (b).

(2) Where, in EPA's judgment, the requested modification of the test standard or schedule would not alter the scope of the test or significantly change the schedule for completing the test, EPA will not ask for public comment before approving the modification. EPA will notify the test sponsor by letter of EPA's approval. EPA will place copies of each application and EPA approval letter in the rulemaking record for the test rule in question. EPA will publish a notice annually in the FEDERAL REGISTER indicating the test standards or schedules for tests required in test rules which have been modified under this paragraph (b)(2) and describing the nature of the modifications. Until the FEDERAL REGISTER notice is published, any modification approved by EPA under this paragraph (b)(2) shall apply only to the test sponsor who applied for the modification under this paragraph (a) of this section.

(3) Where, in EPA's judgment, the requested modification of a test standard or schedule would significantly alter the scope of the test or significantly change the schedule for completing the test, EPA will publish a notice in the FEDERAL REGISTER requesting comment on the proposed modification. However, EPA will approve a requested modification of a test standard under paragraph (b)(3) of this section without first seeking public comment if EPA believes that an immediate modification to the test standard is necessary to preserve the accuracy or validity of an ongoing test. EPA may also modify a testing requirement or test condition in a test standard if EPA determines that the completion or achievement of this requirement or condition is not technically feasible. EPA may approve a test schedule extension under paragraph (b)(3) of this section without first seeking public comment if EPA determines, on a case-by-case basis, that a delay of over 12 months is not the fault of the test sponsor and is the result of unforeseen circumstances such as a lack of laboratory availability, lack of availability of suitable test substance (e.g., 14–C labelled test substance), lack of availability of healthy test organisms, or the unexpected failure of a long-term test. EPA will publish an annual notice in the FEDERAL REGISTER announcing the approval of any test standard modifications and test schedule extensions under paragraph (b)(3) of this section and provide a brief rationale of why the modification was granted.

(4) For purposes of this paragraph (b), a requested modification of a test standard or schedule for a test required under a test rule would alter the scope of the test or significantly change the schedule for completing the test if the modification would:

(i) Change the test species.

(ii) Change the route of administration of the test chemical.

(iii) Change the period of time during which the test species is exposed to the test chemical.

(iv) Except as provided in paragraph (b)(3) of this section, extend the final reporting deadline more than 12 months from the date specified in the final rule.

(c) *Disapproval.* Where EPA concludes that the requested modification of a test standard or schedule for a test required under a test rule is not appropriate, EPA will so notify the test sponsor in writing.

(d) *Timing.* (1) Test sponsors should submit all applications for test schedule modifications at least 60 days before the reporting deadline for the test in question.

(2) EPA will not normally approve any test schedule extensions submitted less than 30 days before the reporting deadline for the test in question.

(3) Except as provided in paragraph (b)(3) of this section, EPA may grant extensions for up to 1 year but will normally limit extensions to a period of time equal to the in-life portion of the test plus 60 days.

(4) EPA will normally approve only one deadline extension for each test.

(5) Test sponsors should submit requests for test standard modifications as soon as they determine that the test

cannot be successfully completed according to the test standard specified in the rule.

[50 FR 20657, May 17, 1985. Redesignated at 51 FR 23713, June 30, 1986, and amended at 52 FR 36571, Sept. 30, 1987; 54 FR 36314, Sept. 1, 1989; 60 FR 34466, July 3, 1995]

§ 790.59 Failure to comply with a test rule.

(a) Persons who notified EPA of their intent to conduct a test required in a test rule in part 799 of this chapter and who fail to conduct the test in accordance with the test standards and schedules adopted in the test rule, or as modified in accordance with § 790.55, will be in violation of the rule.

(b) Any person who fails or refuses to comply with any aspect of this part or a test rule under part 799 of this chapter is in violation of section 15 of the Act. EPA will treat violations of the Good Laboratory Practice standards as indicated in § 792.17 of this chapter.

Subpart D—Implementation, Enforcement and Modification of Consent Agreements

SOURCE: 51 FR 23715, June 30, 1986, unless otherwise noted.

§ 790.60 Contents of consent agreements.

(a) *Standard provisions.* All consent agreements will contain the following provisions:

(1) Identification of the chemical(s) to be tested.

(2) The health effects, environmental effects and/or other characteristics for which testing will be required.

(3) The names and addresses of each manufacturer and/or processor who will sign the agreement.

(4) The name and address of the manufacturer, processor or other entity who has agreed to act as the principal test sponsor.

(5) The technical or commercial grade, level of purity or other characteristics of the test substances(s) or mixture(s).

(6) Standards for the development of test data.

(7) A requirement that testing will be conducted in accordance with the EPA Good Laboratory Practice (GLP) regulations (40 CFR part 792).

(8) Schedules with reasonable deadlines for submitting interim progress and/or final reports to EPA.

(9) A requirement that the principal sponsor will submit a study plan to EPA in accordance with § 790.62.

(10) A statement that the results of testing conducted pursuant to the consent agreement will be announced to the public in accordance with the procedures specified in section 4(d) of the Act and that the disclosure of data generated by such testing will be governed by section 14(b) of the Act.

(11) A requirement that the manufacturers and/or processors signing the consent agreement will comply with the notification requirements of section 12(b)(1) of the Act and part 707 of this chapter if they export or intend to export the substance or mixture for which the submission of data is required under the agreement and a statement that any other person who exports or intends to export such substance or mixture is subject to the above cited export notification requirements.

(12) A requirement that, in the event EPA promulgates a significant new use rule applicable to the test chemical under section 5(a)(2), the consent agreement will have the status of a test rule for purposes of section 5(b)(1)(A) and manufacturers and/or processors signing the agreement will comply with the data submission requirements imposed by that provision.

(13) A statement that each manufacturer and/or processor signing the agreement agrees that violation of its requirements will constitute a ''prohibited act'' under section 15(1) of the Act and will trigger all provisions of TSCA applicable to a violation of section 15.

(14) A statement that, in the event one or more provisions of the agreement are determined to be unenforceable by a court, the remainder of the agreement would not be presumed to be valid and EPA will then either initiate a rulemaking proceeding or publish in the FEDERAL REGISTER the Administrator's reason for not initiating such a proceeding.

(15) A statement that the Agency may conduct laboratory inspections and/or study audits of the testing being conducted pursuant to the consent agreement in accordance with the authority and procedures contained in section 11 of the Act.

(16) A statement that EPA acceptance of a consent agreement constitutes ''final agency action'' for purposes of 5 U.S.C. 704.

(17) Any other requirements that the parties agree are necessary to achieve the purposes of the Act.

(b) *Contents of standards for the development of data.* The standards for the development of the data included in consent agreements will be based on the TSCA test guidelines in 40 CFR parts 796, 797, and 798, the Organization for Economic Cooperation and Development (OECD) test guidelines, the EPA pesticide assessment guidelines published by The National Technical Information Service (NTIS), or other suitable test methodologies. During the negotiation of consent agreements, EPA will initially propose suitable test guidelines as the required test standards; manufacturers and processors or other interested parties may then suggest alternative methodologies or modifications to the Agency's proposed guidelines. These alternative methodologies or modifications will be adopted only where, in the judgment of EPA, they will develop at least equally reliable and adequate data on the chemical substance or mixture subject to the agreement.

(c) *Statement of rationale for consent agreement.* EPA will prepare a written explanation of the basis for each consent agreement. This document will summarize the agreement, describe any ITC testing recommendations for the chemical involved, outline the chemical's use and exposure characteristics, and explain the objectives of the testing to be conducted and the rationale for the specific studies selected. This document will be published in the FEDERAL REGISTER and, for ITC-designated chemicals, will constitute the statement of EPA's reasons for not initiating rulemaking required by section 4(e)(1)(B) of the Act.

[51 FR 23715, June 30, 1986, as amended at 54 FR 36314, Sept. 1, 1989]

§ 790.62 Submission of study plans and conduct of testing.

(a) *Timing of submission.* The principal sponsor of testing conducted pursuant to a consent agreement shall submit a study plan no later than 45 days prior to the initiation of testing.

(b) *Content of study plans.* All study plans are required to contain the following information:

(1) Identity of the consent agreement under which testing will be performed.

(2) The specific test requirements to be covered by the study plan.

(3) The name and address of the principal test sponsor.

(4) The names, addresses, and telephone numbers of the responsible administrative official[s] and project manager[s] in the principal sponsor's organization.

(5) The names, addresses, and telephone numbers of the technical contacts at each manufacturer and/or processor subject to the agreement.

(6) The names and addresses of the testing facilities responsible for the testing and the names, addresses, and telephone numbers of the administrative officials[s] and project manager[s] assigned to oversee the testing program at these facilities.

(7) Brief summaries of the training and experience of each professional involved in the study, including study director, veterinarian[s], toxicologist[s], pathologist[s], chemist[s], microbiologist[s], and laboratory assistants.

(8) Identity and supporting data on the chemical substance[s] being tested, including physical constants, spectral data, chemical analysis, and stability under test and storage conditions, as appropriate.

(9) Study protocol, including the rationale for any combination of test protocols; the rationale for species/strain selection; dose selection (and supporting data); route(s) or method(s) of exposure; description of diet to be used and its source, including nutrients and contaminants and their concentrations; for *in vitro* test systems, a description of culture medium and its source; and a summary of expected spontaneous chronic diseases (including tumors), genealogy, and life span.

(10) A schedule, with reasonable timeables and deadlines, for initiation and completion of each short-term test and of each major phases of long-term tests, and submission of interim progress and/or final reports to EPA.

(c) *Review and modification.* (1) Upon receipt of a study plan, EPA will review it to determine whether it complies with paragraph (b) of this section. If EPA determines that the study plan does not comply with paragraph (b) of this section, EPA will notify the submitter that the plan is incomplete and will identify the deficiencies and the steps necessary to complete the plan. It is the responsibility of the test sponsor to review the study protocols to determine if they comply with all the mandatory testing conditions and requirements in the test standards (i.e., ''shall statements'').

(2) The submitter will have 15 days after the day it receives a notice under paragraph (c)(1) of this section to submit appropriate information to make the study plan complete.

(3) If the submitter fails to provide appropriate information to complete a study plan within 15 days after having received a notice under paragraph (c)(1) of this section, the submitter will be considered to be in violation of the consent agreement and subject to enforcement proceedings pursuant to § 790.65 (c) and (d).

(4) The test sponsor shall submit any amendments to study plans to EPA at the address specified in § 790.5(b).

(d) *Functions of the principal test sponsor.* When testing is being conducted pursuant to a consent agreement, the principal test sponsor will be responsible for submitting interim progress and final reports to EPA, informing the Agency of any proposed changes in standards for the development of data, study plans or testing schedules, and communicating with the Agency about laboratory inspections and other matters affecting the progress of testing.

[51 FR 23715, June 30, 1986, as amended at 54 FR 36314, Sept. 1, 1989; 60 FR 34466, July 3, 1995]

§ 790.65 Failure to comply with a consent agreement.

(a) Manufacturers and/or processors who have signed a consent agreement and who fail to comply with the test requirements, test standards, GLP regulations, schedules, or other provisions contained in the consent agreement, or in modifications to the agreement adopted pursuant to § 790.68, will be in violation of the consent agreement.

(b) The Agency considers failure to comply with any aspect of a consent agreement to be a ''prohibited act'' under section 15 of TSCA, subject to all of the provisions of the Act applicable to violations of section 15. Section 15(1) of TSCA makes it unlawful for any person to fail or refuse to comply with any rule or order issued under section 4. Consent agreements adopted pursuant to this part are ''orders issued under section 4'' for purposes of section 15(1) of TSCA.

(c) Manufacturers and/or processors who violate consent agreements are subject to criminal and/or civil liability. Under the penalty provisions of section 16 of TSCA, such firms could be subject to a civil penalty of up to $25,000 per violation with each day in violation constituting a separate violation of section 15. Intentional violations could lead to the imposition of criminal penalties of up to $25,000 for each day of violation and imprisonment for up to one year. In addition, EPA could invoke the remedies available under section 17 of TSCA, including seeking an injunction to compel adherence to the requirements of the consent agreement.

(d) Noncompliance with a consent agreement will constitute conduct ''in violation of this Act'' under section 20(a)(1) of TSCA. Thus, failure to comply with the requirements of a consent agreement could result in a citizens' civil action under section 20(a)(1) of TSCA.

§ 790.68 Modification of consent agreements.

(a) *Changes in the scope of testing.* (1) Manufacturers or processors subject to a consent agreement, other persons or EPA may seek modifications in the scope of testing performed under the consent agreement. If, upon receiving a request for modification, EPA determines that new issues have been raised that warrant reconsideration of the scope of testing, or if EPA determines

on its own that such reconsideration is appropriate, EPA will publish a FEDERAL REGISTER notice describing the proposed modification and soliciting public comment. If, based on the comments received, EPA concludes that differences of opinion may exist about the proposed modification, EPA will establish a schedule for conducting negotiations and invite parties who wish to participate in or monitor these negotiations to contact the Agency in writing. Any negotiations that EPA conducts will conform to the procedures specified in § 790.22(b).

(2) The scope of testing required by a consent agreement will be modified only where there is a consensus concerning the modified testing requirements among EPA, affected manufacturers and/or processors, and other persons who have asked to participate in or monitor negotiations under paragraph (a)(1) of this section. In determining whether a consensus exists, EPA will employ the criteria specified in § 790.24. In the absence of consensus, EPA may initiate rulemaking under section 4(a) of the Act if it concludes that any testing beyond that required by the consent agreement is necessary and that the other statutory findings required by section 4(a) can be made. While such rulemaking proceedings are underway, the consent agreement will remain in effect unless EPA finds that the testing required by the agreement is or may be unnecessary in view of the testing requirements included in EPA's proposed rule.

(b) *Changes in test standards or schedules.* (1) Any test sponsor who wishes to modify the test schedule for any test required under a consent order must submit an application in accordance with this paragraph. Application for modification must be made in writing to EPA at the address in § 790.5(b), or by phone with written confirmation to follow within 10 working days. Applications must include an appropriate explanation and rationale for the modification. EPA will consider only those applications that request modifications to mandatory testing conditions or requirements (''shall statements'' in the consent order). Where a test sponsor requests EPA to provide guidance or to clarify a non-mandatory testing requirement (i.e., ''should statements''), the test sponsor should submit these requests to EPA at the address in section 790.5(b).

(2)(i) Where EPA concludes that the requested modification of a test standard or schedule for a test required under a consent agreement is appropriate, EPA will proceed in accordance with this paragraph (b)(2).

(ii) Where, in EPA's judgment, the requested modification of a test standard or schedule would not alter the scope of the test or significantly change the schedule for completing the test, EPA will not ask for public comment before approving the modification. EPA will notify the test sponsor, and any other persons who have signed the consent agreement, by letter of EPA's approval. EPA will place copies of each application and EPA approval letter in the administrative record maintained for the consent agreement in question. EPA will publish a notice annually in the FEDERAL REGISTER indicating the test standards or schedules for test required in consent agreements which have been modified under this paragraph (b)(2)(ii) and describing the nature of the modifications.

(iii) Where, in EPA's judgment, the requested modification of a test standard or schedule would significantly alter the scope of the test or significantly change the schedule for completing the test, EPA will publish a notice in the FEDERAL REGISTER requesting comment on the proposed modification. However, EPA will approve a requested modification of a test standard under paragraph (b)(2)(iii) of this section without first seeking public comment if EPA believes that an immediate modification to the test standard is necessary to preserve the accuracy or validity of an ongoing test. EPA also may modify a testing requirement or test condition in a test standard if EPA determines that the completion or achievement of this requirement or condition is not technically feasible. EPA may approve a requested modification of a test schedule under paragraph (b)(2)(iii) of this section without first seeking public comment if EPA determines, on a case-by-case basis, that a delay of over 12 months is not the fault of the test sponsor and is due

to unforeseen circumstances such as a lack of laboratory availability, lack of availability of suitable test substance (e.g., 14–C labelled test substance), lack of availability of healthy test organisms, or the unexpected failure of a long-term test. EPA will publish an annual notice in the FEDERAL REGISTER announcing the approval of any test standard modifications and test scheduled extensions under paragraph (b)(2)(iii) of this section, and provide a brief rationale of why the modification was granted.

(iv) For purposes of this paragraph (b)(2), a requested modification of a test standard of schedule for a test required under a consent agreement would alter the scope of the test or significantly change the schedule for completing the test if the modification would:

(A) Change the test species.

(B) Change the route of administration of the test chemical.

(C) Change the period of time during which the test species is exposed to the test chemical.

(D) Except as provided in paragraph (b)(2)(iii) of this section, extend the final reporting deadline more than 12 months from the date specified in the consent order.

(3) Where EPA concludes that the requested modification of a test standard or schedule for a test requirement under a consent agreement is not appropriate, EPA will so notify the test sponsor in writing.

(c) *Timing.* (1) Test sponsors should submit all applications for test schedule modifications at least 60 days before the reporting deadline for the test in question.

(2) EPA will not normally approve any test schedule extensions submitted less than 30 days before the reporting deadline for the test in question.

(3) Except as provided in paragraph (b)(2)(iii) of this section, EPA may grant extensions as shown necessary for up to 1 year but will normally limit extensions to a period of time equal to the in-life portion of the test plus 60 days.

(4) EPA will normally approve only one deadline extension for each test.

(5) Test sponsors should submit requests for test standard modifications as soon as they determine that the test cannot be successfully completed according to the test standard specified in the consent order.

[51 FR 23715, June 30, 1986, as amended at 52 FR 36571, Sept. 30, 1987; 54 FR 36314, Sept. 1, 1989; 60 FR 34466, July 3, 1995]

Subpart E—Exemptions From Test Rules

SOURCE: 50 FR 20660, May 17, 1985, unless otherwise noted.

§ 790.80 Submission of exemption applications.

(a) *Who should file applications.* (1) Any manufacturer or processor subject to a test rule in part 799 of this chapter may submit an application to EPA for an exemption from performing any or all of the tests required under the test rule.

(2) Processors will not be required to apply for an exemption or conduct testing unless EPA so specifies in a test rule or in a special FEDERAL REGISTER notice as described in § 790.48(b)(2) under the following circumstances:

(i) If testing is being required to allow evaluation of risks associated with manufacturing and processing or with distribution in commerce, use, or disposal of the chemical and manufacturers do not submit notice(s) of intent to conduct the required testing; or

(ii) If testing is being required solely to allow evaluation of risks associated with processing of the chemical.

(b) *When applications must be filed.* (1) Exemption applications must be filed within 30 days after the effective date of the test rule described in § 790.40 or, if being submitted in compliance with the FEDERAL REGISTER notice described in § 790.48(b)(2), within 30 days after the publication of that notice.

(2) Exemption applications must be filed by the date manufacture or processing begins by any person not manufacturing or processing the subject chemical as of the effective date of the test rule described in § 790.40 or by 30 days after the effective date of the test rule described in § 790.40, who, before the end of the reimbursement period, manufactures or processes the test substance and who is subject to the requirement to submit either a letter of

intent to test or an exemption application.

(3) When both manufacturers and processors are subject to the rule, exemption applications must be filed by the date processing begins by any person not processing as of the effective date of the test rule described in § 790.40 or by 30 days after publication of the FEDERAL REGISTER notice described in § 790.48(b)(2) who, before the end of the reimbursement period, processes the test substance and who is subject to the requirement to submit either a letter of intent to test or an exemption application.

(c) *Scope of application*. A person may apply for an exemption from all, or one or more, specific testing requirements in a test rule in part 799 of this chapter.

[50 FR 20660, May 17, 1985, as amended at 58 FR 34205, June 23, 1993]

§ 790.82 Content of exemption application.

The exemption application must contain:

(a) The identity of the test rule, the chemical identity, and the CAS No. of the test substance on which the application is based.

(b) The specific testing requirement(s) from which an exemption is sought and the basis for the exemption request.

(c) Name, address, and telephone number of applicant.

(d) Name, address, and telephone number of appropriate individual to contact for further information.

(e)(1) If required in the test rule to establish equivalence:

(i) The chemical identity of the test substance on which the application is based.

(ii) Equivalence data specified in § 790.85.

(2) If a test rule requires testing of a single representative substance, EPA will consider all forms of the chemical subject to that rule to be equivalent and will not require the submission of equivalence data as described in § 790.85.

[50 FR 20660, May 17, 1985, as amended at 54 FR 36315, Sept. 1, 1989]

§ 790.85 Submission of equivalence data.

If EPA requires in a test rule promulgated under section 4 of the Act the testing of two or more test substances which are forms of the same chemical, each exemption applicant must submit the following data:

(a) The chemical identity of each technical-grade chemical substance or mixture manufactured and/or processed by the applicant for which the exemption is sought. The exact type of identifying data required will be specified in the test rule, but may include all characteristics and properties of the applicant's substance or mixture, such as boiling point, melting point, chemical analysis (including identification and amount of impurities), additives, spectral data, and other physical or chemical information that may be relevant in determining whether the applicant's substance or mixture is equivalent to the specific test substance.

(b) The basis for the applicant's belief that the substance or mixture is equivalent to the test substance or mixture.

(c) Any other data which exemption applicants are directed to submit in the test rule which may bear on a determination of equivalence. This may include a description of the process by which each technical-grade chemical substance or mixture for which an exemption is sought is manufactured or processed prior to use or distribution in commerce by the applicant.

§ 790.87 Approval of exemption applications.

(a) EPA will conditionally approve exemption applications if:

(1)(i) For single-phase test rules, EPA has received a letter of intent to conduct the testing from which exemption is sought;

(ii) For two-phase test rules, EPA has received a complete proposed study plan for the testing from which exemption is sought and has adopted the study plan, as proposed or modified, as test standards and schedules in a final Phase II test rule; and

(2) The chemical substance or mixture with respect to which the application was submitted is equivalent to a test substance or mixture for which the

required data have been or are being submitted in accordance with a test rule; and

(3) Submission of the required test data concerning that chemical substance or mixture would be duplicative of data which have been or are being submitted to EPA in accordance with a test rule.

(b)(1) If a single representative substance is to be tested under a test rule, EPA will consider all forms of the chemical subject to that rule to be equivalent and will contact the exemption applicant only if information is missing or unclear.

(2) If two or more representative substances are to be tested under a test rule, EPA will evaluate equivalence claims made in each exemption application according to the criteria discussed in the test rule.

(i) If EPA finds an equivalence claim to be in error or inadequately supported, the applicant will be notified by certified mail. The applicant will be given 15 days to provide clarifying information.

(ii) Exemption applicants will be notified that equivalence has been accepted or rejected.

(c) The final Phase II test rule which adopts the study plans in two-phase rulemaking, a separate FEDERAL REGISTER notice in single-phase rulemaking, or a letter by certified mail will give exemption applicants final notice that they have received a conditional exemption. All conditional exemptions thus granted are contingent upon the test sponsors' successful completion of testing according to the specifications in the test rule.

§ 790.88 Denial of exemption application.

(a) EPA may deny any exemption application if:

(1) EPA determines that the applicant has failed to demonstrate that the applicant's chemical is equivalent to the test substance; or

(2) The exemption applicant fails to submit any of the information specified in § 790.82; or

(3) The exemption applicant fails to submit any of the information specified in § 790.85 if required in the test rule; or

(4)(i) For single-phase test rules, EPA has not received a letter of intent to conduct the test for which exemption is sought; or

(ii) For two-phase test rules, EPA has not received an adequate study plan for the test for which exemption is sought; or

(5) The study sponsor(s) fails to initiate the required testing by the deadlines adopted in the test rule; or

(6) The study sponsor(s) fails to submit data as required in the test standard and deadlines for submission of test data as adopted in the test rule or as modified in accordance with § 790.55.

(b) EPA will notify the exemption applicant by certified mail or FEDERAL REGISTER notice of EPA's determination that the exemption application is denied.

§ 790.90 Appeal of denial of exemption application.

(a) Within 30 days after receipt of notification that EPA has denied an application for exemption, the applicant may file an appeal with EPA.

(b) The appeal shall indicate the basis for the applicant's request for reconsideration.

(c)(1) The applicant may also include a request for a hearing. Hearings will be held according to the procedures described in § 790.97.

(2) Hearing requests must be in writing and must be received by EPA within 30 days of receipt of the letter or publication of the FEDERAL REGISTER notice described in § 790.88(b). Hearing requests must provide reasons why a hearing is necessary.

(d) If EPA determines that there are material issues of fact, then the request for a hearing will be granted. If EPA denies a hearing request, EPA will base its decision on the written submission.

(e) EPA will notify the applicant of its decision within 60 days after EPA receives the appeal described in paragraph (a) of this section or within 60 days after completion of a hearing described in paragraph (c) of this section.

(f) The filing of an appeal from the denial of an exemption shall not act to stay the applicant's legal obligations under a test rule promulgated under section 4 of the Act.

§ 790.93 Termination of conditional exemption.

(a) EPA shall terminate a conditional exemption if it determines that:

(1) The test which provided the basis for approval of the exemption application has not been started by the deadlines for initiation of testing adopted in the test rule or modified in accordance with § 790.55; or

(2) Data required by the test rule have not been generated in accordance with the test standards or submitted in accordance with the deadlines for submission of test data that were adopted in the test rule or modified in accordance with § 790.55; or

(3) The testing has not been conducted or the data have not been generated in accordance with the Good Laboratory Practice requirements in part 792 of this chapter.

(b) If EPA determines that one or more of the criteria listed in paragraph (a) of this section has been met, EPA will notify each holder of an affected conditional exemption by certified mail or FEDERAL REGISTER notice of EPA's intent to terminate that conditional exemption.

(c) Within 30 days after receipt of a letter of notification or publication of a notice in the FEDERAL REGISTER that EPA intends to terminate a conditional exemption, the exemption holder may submit information to rebut EPA's preliminary decision or notify EPA by letter of its intent to conduct the required test pursuant to the test standard established in the final test rule. Such a letter of intent shall contain all of the information required by § 790.45(c).

(d)(1) The exemption holder may also include a request for a hearing. Hearings will be held in accordance with the procedures set forth in § 790.97.

(2) Hearing requests must be in writing and must be received by EPA within 30 days after receipt of the letter or publication in the FEDERAL REGISTER notice described in paragraph (b) of this section.

(e) EPA will notify the exemption holder by certified letter or by FEDERAL REGISTER notice of EPA's final decision concerning termination of conditional exemptions and will give instructions as to what actions the former exemption holder must take to avoid being found in violation of the test rule.

§ 790.97 Hearing procedures.

(a) Hearing requests must be in writing to EPA and must include the applicant's basis for appealing EPA's decision.

(b) If more than one applicant has requested a hearing on similar grounds, all of those appeals will be considered at the same hearing unless confidentiality claims preclude a joint hearing.

(c) EPA will notify each applicant of EPA's decision within 60 days after the hearing.

§ 790.99 Statement of financial responsibility.

Each applicant for an exemption shall submit the following sworn statement with his or her application:

I understand that if this application is granted before the reimbursement period described in section 4(c)(3)(B) of TSCA expires, I must pay fair and equitable reimbursement to the person or persons who incurred or shared in the costs of complying with the requirement to submit data and upon whose data the granting of my application was based.

APPENDIX A TO SUBPART E OF PART 790—SCHEDULE FOR DEVELOPING CONSENT AGREEMENTS AND TEST RULES

EPA intends to follow the schedule set forth in this Appendix to evaluate testing candidates, conduct negotiations, develop consent agreements where appropriate, and propose and promulate test rules in those instances where testing can be required under section 4(a) of TSCA but agreement cannot be reached in timely manner on a consent agreement. Where deadlines are imposed by the statute, they are binding on EPA and will be observed by the Agency. The remaining dates represent targets that EPA intends to meet.

This schedule is based on what EPA currently believes are reasonable target dates. As EPA gains experience with the process and determines the feasibility of these schedules, it may adjust the schedule accordingly. EPA will solicit public comment before implementing any changes in the schedule.

Week [1]	Event
0	Receive ITC report, recommendation.

Week [1]	Event
2	Publish ITC report, 8(a) and 8(d) notices, and invitation for public participation in negotiations.
3–6	Comment period on ITC report.
6	Public focus meeting.
7–14	8(a) and 8(d) reporting period.
22	Public meeting on course-setting decision and deadline for requests to participate in negotiations.
22–30	Negotiations.
32	EPA decision point: consent agreement or test rule.

[1] The dates contained in the left-hand column are calculated from the date EPA receives the ITC report recommending a chemical for testing.

Week	Consent Agreement	Week	Test Rule
36–40	Comment period on consent agreement	32–60	Rule preparation, agency review and sign-off.
42	Comment resolution meeting if necessary.	62	Publish proposed rule in FEDERAL REGISTER.[1]
48	Sign-off consent agreement and FEDERAL REGISTER notice.	70–106	Agency reviews comments; preparation of final rule or no-test decision, agency review and sign-off.[1]
50	Publish FEDERAL REGISTER notice	108	Publish final rule or no-test decision in FEDERAL REGISTER.[1]

[1] As stated in § 790.26, EPA may publish an Advance Notice of Proposed Rulemaking (ANPR) where the testing recommendations of the ITC raise unusually novel and complex issues that require additional Agency review and opportunity for public comment. EPA intends to publish such ANPRs by Week 62 following receipt of the initial ITC report; to publish a proposed rule or decision-not-to-test by Week 108; and to publish a final rule or notice terminating the rulemaking process by Week 154.

[51 FR 23717, June 30, 1986]

PART 791—DATA REIMBURSEMENT

Subpart A—General Provisions

Sec.
791.1 Scope and authority.
791.2 Applicability.
791.3 Definitions.

Subpart B—Hearing Procedures

791.20 Initiation of reimbursement proceeding.
791.22 Consolidation of hearings.
791.27 Pre-hearing preparation.
791.29 Appointment of hearing officer.
791.30 Hearing procedures.
791.31 Expedited procedures.
791.34 Serving of notice.
791.37 The award.
791.39 Fees and expenses.

Subpart C—Basis for Proposed Order

791.40 Basis for the proposed order.
791.45 Processors.
791.48 Production volume.
791.50 Costs.
791.52 Multiple tests.

Subpart D—Review

791.60 Review.

Subpart E—Final Order

791.85 Availability of final Agency order.

Subpart F—Prohibited Acts

791.105 Prohibited acts.

AUTHORITY: 15 U.S.C. 2603 and 2607.

SOURCE: 48 FR 31791, July 11, 1983, unless otherwise noted.

Subpart A—General Provisions

§ 791.1 Scope and authority.

(a) This part establishes procedures and criteria to be used in determining fair amounts of reimbursement for testing costs incurred under section 4(a) of the Toxic Substances Control Act (TSCA) (15 U.S.C. 2603(a)).

(b) Section 4(c) of TSCA requires EPA to develop rules for the determination of fair and equitable reimbursement (15 U.S.C. 2603 (c)).

§ 791.2 Applicability.

(a) This rule is potentially applicable to all manufacturers, importers and processors who may be required by a specific test rule promulgated under section 4(a) of TSCA to conduct tests and submit data, and who seek the assistance of the Administrator in determining the amount or method of reimbursement. Persons subject to a test rule have an obligation from the date the test rule becomes effective until the end of the reimbursement period, either to test or to obtain an exemption and pay reimbursement.

(b) The provisions of this rule will take effect only when private efforts to resolve a dispute have failed and a manufacturer or processor requests EPA's assistance.

§ 791.3 Definitions.

Terms defined in the Act, and not explicitly defined herein, are used with the meanings given in the Act.

(a) *The Act* refers to the Toxic Substances Control Act (TSCA) (15 U.S.C. 2601 *et seq.*).

(b) *The Agency* or *EPA* refers to the Environmental Protection Agency.

(c) *Byproduct* refers to a chemical substance produced without a separate commercial intent during the manufacture, processing, use or disposal of another chemical substance or mixture.

(d) *Dispute* refers to a present controversy between parties subject to a test rule over the amount or method of reimbursement for the cost of developing health and environmental data on the test chemical.

(e) *Exemption holder* refers to a manufacturer or processor, subject to a test rule, that has received an exemption under sections 4(c)(1) or 4(c)(2) of TSCA from the requirement to conduct a test and submit data.

(f) *Impurity* refers to a chemical substance unintentionally present with another chemical substance or mixture.

(g) A *party* refers to a person subject to a section 4 test rule, who:

(1) Seeks reimbursement from another person under these rules, or

(2) From whom reimbursement is sought under these rules.

(h) *Reimbursement period* refers to a period that begins when the data from the last non-duplicative test to be completed under a test rule is submitted to EPA and ends after an amount of time equal to that which had been required to develop that data or after 5 years, whichever is later.

(i) *Small business* refers to a manufacturer or importer whose annual sales, when combined with those of its parent company (if any) are less than $30 million.

(j) *Test rule* refers to a regulation ordering the development of data on health or environmental effects or chemical fate for a chemical substance or mixture pursuant to TSCA section 4(a).

Subpart B—Hearing Procedures

§ 791.20 Initiation of reimbursement proceeding.

(a) When persons subject to a test rule are unable to reach an agreement on the amount or method of reimbursement for test data development as described in TSCA section 4(c)(3)(A), any of them may initiate a proceeding by filing two signed copies of a request for a hearing with a regional office of the American Arbitration Association and mailing a copy of the request to EPA, and to each person from whom they seek reimbursement, or who seeks reimbursement from them.

(b) The request for hearing must contain the following:

(1) The names and addresses of the filing party and its counsel, if any.

(2) Identification of the test rule under which the dispute arose.

(3) A list of the parties from whom reimbursement is sought or who are seeking reimbursement, a brief description of the attempts to reach agreement and a concise explanation of the issues on which the parties are unable to agree.

(c) The request for a hearing shall be accompanied by the appropriate administrative fee, as provided in a current Fee Schedule of the American Arbitration Association.

§ 791.22 Consolidation of hearings.

(a) Promptly upon receipt of the request for a hearing, the Administrator will publish a notice in the FEDERAL REGISTER, advising those subject to the test rule that a request for a hearing has been made.

(b) Any other person wishing to participate in the hearing shall so notify EPA within 45 days of the FEDERAL REGISTER notice. EPA will promptly inform the regional office of the American Arbitration Association where the request has been filed of the additional parties.

§ 791.27 Pre-hearing preparation.

(a) *Responses to requests for hearings.* After filing of the request for hearing, if any other party desires to file an answer it shall be made in writing and filed with the American Arbitration Association, and a copy thereof shall

be mailed to the other parties within a period of fourteen days from the date of receiving the complete list of parties. After the hearing officer is appointed, however, no new or different claim may be submitted except with the hearing officer's consent.

(b) *Pre-hearing conference.* At the request of the parties or at the discretion of the American Arbitration Association, a pre-hearing conference with a representative of the American Arbitration Association and the parties or their counsel will be scheduled in appropriate cases to arrange for an exchange of information and the stipulation of uncontested facts so as to expedite the proceedings.

(c) *Fixing of locale.* The parties may mutually agree on the locale where the hearing is to be held. If the locale is not designated within 45 days from the time the complete list of parties is received, the American Arbitration Association shall have power to determine the locale. Its decision shall be final and binding. If any party requests, and informs the other parties of its request, that the hearing be held in a specific locale and the other parties file no objection thereto within 14 days of the request, the locale shall be the one requested.

(d) *Time and place.* The hearing officer shall fix the time and place for each hearing. The American Arbitration Association will mail notice to each party at least 14 days in advance.

§ 791.29 Appointment of hearing officer.

(a) *Qualifications of hearing officer.* All hearing officers shall be neutral, subject to disqualification for the reasons specified in paragraph (f) of this section.

(b) *Appointment from panel.* Promptly after receiving the complete list of parties at the close of the notice period described in § 791.22, the American Arbitration Association shall submit simultaneously to each party to the dispute an identical list of names. Each party to the dispute shall have thirty days from the mailing date in which to cross off any names objected to, number the remaining names to indicate the order of preference, and return the list to the American Arbitration Association. If a party does not return the list within the time specified, all persons named therein shall be deemed acceptable to that party. From among the persons who have been approved on all lists, and in accordance with the designated order of mutual preference, the American Arbitration Association shall invite the acceptance of a hearing officer to serve. If the parties fail to agree upon any of the persons named, or if acceptable hearing officers are unable to act, or if for any other reason the appointment cannot be made from the submitted lists, the American Arbitration Association shall have the power to make the appointment without the submission of any additional list.

(c) *Nationality of hearing officer in international dispute.* If one of the parties is a national or resident of a country other than the United States, the hearing officer shall upon the request of any party, be appointed from among the nationals of a country other than that of the parties.

(d) *Number of hearing officers.* The dispute shall be heard and determined by one hearing officer unless the American Arbitration Association, in its discretion, directs that a greater number of hearing officers be appointed.

(e) *Notice of appointment.* Notice of the appointment of the hearing officer, together with a copy of these rules, and the signed acceptance of the hearing officer shall be filed prior to the opening of the first hearing.

(f) *Disclosure and challenge procedure.* A person appointed as hearing officer shall disclose to the American Arbitration Association any circumstances likely to affect impartiality, including any bias or any financial or personal interest in the result of the hearing or any past or present relationship with the parties or their counsel. Upon receipt of such information from such hearing officer or other source, the American Arbitration Association shall communicate such information to the parties, and, if it deems it appropriate to do so, to the hearing officer and others. Thereafter, the American Arbitration Association shall determine whether the hearing officer should be disqualified and shall inform the parties of its decision, which shall be conclusive.

(g) *Vacancies.* If any hearing officer should resign, die, withdraw, refuse, be disqualified or be unable to perform the duties of the office, the American Arbitration Association may, on proof satisfactory to it, declare the office vacant. Vacancies shall be filled in accordance with the applicable provisions of these rules and the matter shall be reheard unless the parties shall agree otherwise.

§ 791.30 Hearing procedures.

(a) *Representation by counsel.* Any party may be represented by counsel. A party intending to be so represented shall notify the other parties and the American Arbitration Association of the name and address of counsel at least 5 days prior to the date set for the hearing at which counsel is first to appear. When a hearing is initiated by counsel, or where an attorney replies for the other party, such notice is deemed to have been given.

(b) *Stenographic record.* The American Arbitration Association shall make the necessary arrangements for the taking of a stenographic record. The parties shall share the cost of such record.

(c) *Attendance at hearings.* The hearing officer shall have the power to require the exclusion of anyone, including a party or other essential person, during the testimony of any witness to protect confidential business information. It shall be discretionary with the hearing officer to determine the propriety of the attendance of any other person.

(d) *Oaths.* Hearing officers shall swear or affirm their neutrality and their dedication to a fair and equitable resolution. Witnesses shall swear or affirm that they are telling the truth.

(e) *Order of proceedings.* (1) A hearing shall be opened by the filing of the oath of the hearing officer and by the recording of the place, time and date of the hearing, the presence of the hearing officer and parties, and counsel, if any, and by the receipt by the hearing officer of the request for hearing and answer, if any.

(2) The hearing officer may, at the beginning of the hearing, ask for statements clarifying the issues involved.

(3) The party or parties seeking reimbursement shall then present a claim and proofs and witnesses, who shall submit to questions or other examination. The party or parties from whom reimbursement is sought shall then present a defense and proofs and witnesses, who shall submit to questions or other examination. The hearing officer has discretion to vary this procedure but shall afford full and equal opportunity to all parties for the presentation of any material or relevant proofs.

(4) Exhibits, when offered by any party, shall be received in evidence by the hearing officer. The names and addresses of all witnesses and exhibits in order received shall be made a part of the record.

(f) *Hearing in the absence of a party.* A hearing may proceed in the absence of any party which, after due notice, fails to be present or fails to obtain an adjournment. An award shall not be made solely on the default of a party. The hearing officer shall require the parties who are present to submit such evidence as the hearing officer may require for the making of an award.

(g) *Evidence.* (1) The parties may offer such evidence as they desire and shall produce such additional evidence as the hearing officer may deem necessary to an understanding and determination of the dispute. The hearing officer shall be the judge of the relevancy and materiality of the evidence offered and conformity to legal rules of evidence shall not be necessary. All evidence shall be taken in the presence of all the hearing officers and of all the parties, except where any of the parties is absent in default, has waived the right to be present, or has been excluded by the hearing officer to protect confidential business information.

(2) All documents not filed with the hearing officer at the hearing, but arranged for by agreement of the parties, shall be filed with the American Arbitration Association for transmission to the hearing officer, according to the agreed-upon schedule. All parties shall be afforded opportunity to examine such documents.

(h) *Evidence by affidavit and filing of documents.* The hearing officer shall receive and consider the evidence of witnesses by affidavit, but shall give it only such weight as the hearing officer

deems it entitled to after consideration of any objections made to its admission.

(i) *Closing of hearings.* The hearing officer shall specifically inquire of all parties whether they have any further proofs to offer or witnesses to be heard. Upon receiving negative replies, the hearing officer shall declare the hearings closed and record the time of closing of the hearing. If briefs are to be filed, the hearings shall be declared closed as of the final date set by the hearing officer for the receipt of briefs. If documents are to be filed as provided for in paragraph (g)(2) of this section and the date set for their receipt is later than that set for the receipt of briefs, the later date shall be the date of closing the hearings.

(j) *Reopening of hearings.* The hearings may be reopened on the hearing officer's own motion, or upon application of a party at any time before the award is made. If the reopening of the hearings would prevent the making of the award within the specified time the matter may not be reopened, unless the parties agree upon the extension of the time limit.

(k) *Waiver of oral hearings.* The parties may provide, by written agreement, for the waiver of oral hearings. If the parties are unable to agree as to the procedure, the American Arbitration Association shall specify a fair and equitable procedure.

(l) *Waiver of rules.* Any party who proceeds with the hearing after knowledge that any provision or requirement of these rules has not been complied with and who fails to state objection thereto in writing, shall be deemed to have waived the right to object.

(m) *Extensions of time.* The parties may modify any period of time by mutual agreement. The American Arbitration Association for good cause may extend any period of time established by these rules, except the time for making the award. (§ 791.37(a)) The American Arbitration Association shall notify the parties of any such extension of time and its reason therefor.

(n) *Communication with hearing officer.* There shall be no direct communication between the parties and a hearing officer other than at oral hearings. Any other oral or written communications from the parties to the hearing officer shall be directed to the American Arbitration Association for transmittal to the hearing officer.

§ 791.31 Expedited procedures.

Unless the American Arbitration Association in its discretion determines otherwise, the Expedited Procedures described in this section shall be applied in any case where the total claim of any party does not exceed $5,000, exclusive of interest and hearing costs, and may be applied in other cases if the parties agree.

(a) *Application of rules.* The expedited hearings will be conducted according to the same procedures as the regular ones, except for those specifically changed by the expedited rules in this section, § 791.31.

(b) *Notice by telephone.* The parties shall accept all notices from the American Arbitration Association by telephone. Such notices by the American Arbitration Association shall subsequently be confirmed in writing to the parties. Notwithstanding the failure to confirm in writing any notice or objection hereunder, the proceeding shall nonetheless be valid if notice or obligation has, in fact, been given by telephone.

(c) *Appointment and qualifications of hearing officers.* The American Arbitration Association shall submit simultaneously to each party to the dispute an identical list of five persons from which one hearing officer shall be appointed. Each party shall have the right to strike two names from the list on a peremptory basis. The list is returnable to the American Arbitration Association within 10 days from the date of mailing. If for any reasons the appointment cannot be made from the list, the American Arbitration Association shall have the authority to make the appointment without the submission of additional lists. Such appointment shall be subject to disqualification for the reasons specified in § 791.29(f). The parties shall be given notice by telephone by the American Arbitration Association of the appointment of the hearing officer. The parties shall notify the American Arbitration Association, by telephone, within 7 days of any objections to the hearing

officer(s) appointed. Any objection by a party to such hearing officer shall be confirmed in writing to the American Arbitration Association with a copy to the other parties.

(d) *Time and place of hearing.* The hearing officer shall fix the date, time and place of the hearing. The American Arbitration Association will notify the parties by telephone, 7 days in advance of the hearing date. Formal notice of hearing will be sent by the American Arbitration Association to the parties.

(e) *The hearing.* Generally, the hearing shall be completed within 1 day. The hearing officer, for good cause shown, may schedule an additional hearing to be held within 5 days.

(f) *Time of award.* Unless otherwise agreed to by the parties, the Award shall be rendered not later than 15 business days from the date of the closing of the hearing.

§ 791.34 Serving of notice.

(a) Each party shall be deemed to have consented that any papers, notices or process necessary or proper for the initiation or continuation of a hearing under these rules and for any appeal to EPA or any court action in connection therewith may be served upon such party by mail addressed to such party or its attorney at its last known address or by personal service, within or without the state wherein the arbitration is to be held (whether such party be within or without the United States of America), provided that reasonable opportunity to be heard with regard thereto has been granted such party.

(b) The American Arbitration Association shall, upon the written request of a party, furnish to such party, at its expense, certified facsimiles of any papers in the American Arbitration Association's possession that may be required in appeal to EPA or judicial proceedings relating to the hearing.

§ 791.37 The award.

(a) *Time of award.* The award shall be made promptly by the hearing officer and, unless otherwise agreed by the parties, no later than 30 days from the date of closing the hearings, or if oral hearings have been waived, from the date of transmitting the final statements and proofs to the hearing officer.

(b) *Form of award.* The award shall be in writing and shall be signed either by the sole hearing officer or by at least a majority if there is more than one. It shall contain a concise statement of its basis and rationale, and a timetable for payment of any ordered reimbursement.

(c) *Delivery of award to parties.* Parties shall accept as legal delivery of the award the delivery of the award or a true copy thereof by certified mail to the party at its last known address or to its attorney, or by personal service.

§ 791.39 Fees and expenses.

(a) *Administrative fees.* (1) As a not-for-profit organization, the American Arbitration Association shall prescribe an Administrative Fee Schedule and a Refund Schedule to compensate it for the cost of providing administrative services. The schedule in effect at the time of filing or the time of refund shall be applicable.

(2) The administrative fees shall be advanced by the initiating party or parties, subject to final apportionment by the hearing officer in the award. The administrative fee is increased by 10 percent of the original for each additional party.

(3) Fees and expenses in excess of the limit contained in section 26(b) of TSCA ($2,500 per person, or $100 per small business) will be paid by EPA.

(b) *Expenses.* Subject to paragraph (a)(3) of this section, all expenses of the hearing, including the cost of recording (though not transcribing) the hearing and required traveling and other expenses of the hearing officer and of American Arbitration Association representatives, and the expenses of any witness or the cost of any proofs produced at the direct request of the hearing officer, shall be borne equally by the parties, unless they agree otherwise, or unless the hearing officer, in the award, assesses such expenses or any part thereof against any specified party or parties.

(c) *Hearing officer's fee.* Hearing officers will normally serve without a fee. In prolonged or special cases the American Arbitration Association in consultation with the Administrator may

determine that payment of a fee by the parties is appropriate and may establish a reasonable amount, taking into account the extent of service by the hearing officer and other relevant circumstances of the case. Any arrangements for compensation shall be made through the American Arbitration Association and not directly between the parties and the hearing officer.

Subpart C—Basis for Proposed Order

§ 791.40 Basis for the proposed order.

(a) The hearing officer shall propose a fair and equitable amount of reimbursement. The formula in paragraph (b) of this section shall be presumed to be fair and equitable as applied to all persons subject to a test rule. However, the hearing officer has the discretion to modify the formula, or to use some other basis for allocation if necessary. Additional factors that may be taken into account include, but are not limited to, relative amounts of exposure attributable to each person and the effect of the reimbursement share on competitive position.

(b) In general, each person's share of the test cost shall be in proportion to its share of the total production volume of the test chemical:

$$R_x = C\frac{V_x}{V_t}$$

Where:

R=the reimbursement share owed by company X.

C=the total cost of the testing required by the test rule.

V_x=the volume of the test chemical produced or imported by company X over the period defined by § 791.48.

V_t=the total volume of the test chemical produced or imported over the period defined by § 791.48.

(c) The burden of proposing modifications to the formula shall lie with the party requesting the modification.

§ 791.45 Processors.

(a) Generally, processors will be deemed to have fulfilled their testing and reimbursement responsibilities indirectly, through higher prices passed on by those directly responsible, the manufacturers. There are three circumstances in which processors will have a responsibility to provide reimbursement directly to those paying for the testing:

(1) When a test rule or subsequent FEDERAL REGISTER notice pertaining to a test rule expressly obligates processors as well as manufacturers to assume direct testing and data reimbursement responsibilities.

(2) When one or more manufacturers demonstrate to the hearing officer that it is necessary to include processors in order to provide fair and equitable reimbursement in a specific case.

(3) When one or more processors voluntarily agree to reimburse manufacturers for a portion of test costs. Only those processors who volunteer will incur the obligation.

(b) A hearing including processors shall be initiated in the same way as those including only manufacturers. Voluntary negotiations must be attempted in good faith first, and the request for a hearing must contain the names of the parties and a description of the unsuccessful negotiations.

(c) When processors as well as manufacturers are required to provide reimbursement, the hearing officer will decide for each case how the reimbursement should be allocated among the participating parties. When a test rule is applicable solely to processors, the hearing officer will apply the formula to the amount of the test chemical purchased or processed.

§ 791.48 Production volume.

(a) Production volume will be measured over a period that begins one calendar year before publication of the final test rule in the FEDERAL REGISTER and continues up to the latest data available upon resolution of a dispute.

(b) For the purpose of determining fair reimbursement shares, production volume shall include amounts of the test chemical imported in bulk form and mixtures, and the total domestic production of the chemical including that produced as a byproduct. Impurities will not be included unless the test rule specifically includes them.

(c) Amounts of the test chemical manufactured for export will not be included unless covered by a finding under TSCA section 12(a)(2).

(d) Chemicals excluded from the jurisdiction of TSCA by section 3(2)(B) need not be included in the computation of production volume. (Chemicals used as intermediates to produce pesticides are covered by TSCA.)

(e) The burden of establishing the fact that particular amounts of the test chemical are produced for exempt purposes lies with the party seeking to exclude those amounts from the calculation of his production volume.

§ 791.50 Costs.

(a) All costs reasonable and necessary to comply with the test rule, taking into account the practices of other laboratories in conducting similar tests, are eligible for reimbursement. Necessary costs include:

(1) Direct and indirect costs of planning, conducting, analyzing and submitting the test results to EPA.

(2) A reasonable profit, and a reasonable rate of interest and depreciation on the tester's initial capital investment.

(3) The cost of repeating or repairing tests where failure was demonstrably due to some cause other than negligence of the tester.

(b) Costs attributable to tests beyond those specified by EPA shall not be eligible for reimbursement under this rule.

§ 791.52 Multiple tests.

When more than one of a particular kind of test required by the test rule is performed, the additional costs will be shared among all those holding exemptions. The costs of all the tests will be added together and each exemption holder shall be responsible for a share of the total which is equal to its share of the total production of the test chemical. The exemption holders shall divide their shares between test sponsors in proportion to the costs of their respective tests. Those sponsoring a particular test do not have to obtain exemptions for that test and therefore do not have reimbursement responsibilities for the same tests done by others.

Subpart D—Review

§ 791.60 Review.

(a) The hearing officer's proposed order shall become the final Agency order 30 days after issuance unless within the 30-day period one of the parties requests Agency review or the Administrator of his own initiative decides to review the proposed order.

(b) The proposed order may be reviewed upon the record of the hearing and the petitions for review. If necesary, the Administrator may order the transcription of the stenographic record of the hearing, written briefs, oral arguments or any other reasonable aids to making an equitable decision.

(c) The final Agency order may be reviewed in federal court as provided by 26 U.S.C. 2603(c).

Subpart E—Final Order

§ 791.85 Availablity of final Agency order.

The final Agency order shall be available to the public for inspection and copying pursuant to 5 U.S.C. 552(a)(2), subject to necessary confidentiality restrictions.

Subpart F—Prohibited Acts

§ 791.105 Prohibited acts.

Failure to provide information required by the Agency or to pay the amounts awarded under this rule within time alloted in the final order shall constitute a violation of 15 U.S.C. 2614(1) or 2614(3).

PART 792—GOOD LABORATORY PRACTICE STANDARDS

Subpart A—General Provisions

Sec.
792.1 Scope.
792.3 Definitions.
792.10 Applicability to studies performed under grants and contracts.
792.12 Statement of compliance or non-compliance.
792.15 Inspection of a testing facility.
792.17 Effects of non-compliance.

Subpart B—Organization and Personnel

792.29 Personnel.

792.31 Testing facility management.
792.33 Study director.
792.35 Quality assurance unit.

Subpart C—Facilities

792.41 General.
792.43 Test system care facilities.
792.45 Test system supply facilities.
792.47 Facilities for handling test, control, and reference substances.
792.49 Laboratory operation areas.
792.51 Specimen and data storage facilities.

Subpart D—Equipment

792.61 Equipment design.
792.63 Maintenance and calibration of equipment.

Subpart E—Testing Facilities Operation

792.81 Standard operating procedures.
792.83 Reagents and solutions.
792.90 Animal and other test system care.

Subpart F—Test, Control, and Reference Substances

792.105 Test, control, and reference substance characterization.
792.107 Test, control, and reference substance handling.
792.113 Mixtures of substances with carriers.

Subpart G—Protocol for and Conduct of A Study

792.120 Protocol.
792.130 Conduct of a study.
792.135 Physical and chemical characterization studies.

Subparts H–I [Reserved]

Subpart J—Records and Reports

792.185 Reporting of study results.
792.190 Storage and retrieval of records and data.
792.195 Retention of records.

AUTHORITY: 15 U.S.C. 2603.

SOURCE: 54 FR 34043, Aug. 17, 1989, unless otherwise noted.

Subpart A—General Provisions

§ 792.1 Scope.

(a) This part prescribes good laboratory practices for conducting studies relating to health effects, environmental effects, and chemical fate testing. This part is intended to ensure the quality and integrity of data submitted pursuant to testing consent agreements and test rules issued under section 4 of the Toxic Substances Control Act (TSCA) (Pub. L. 94–469, 90 Stat. 2006, 15 U.S.C. 2603 *et seq.*).

(b) This part applies to any study described by paragraph (a) of this section which any person conducts, initiates, or supports on or after September 18, 1989.

(c) It is EPA's policy that all data developed under section 5 of TSCA be in accordance with provisions of this part. If data are not developed in accordance with the provisions of this part, EPA will consider such data insufficient to evaluate the health and environmental effects of the chemical substances unless the submitter provides additional information demonstrating that the data are reliable and adequate.

§ 792.3 Definitions.

As used in this part the following terms shall have the meanings specified:

Batch means a specific quantity or lot of a test, control, or reference substance that has been characterized according to § 792.105(a).

Carrier means any material, including but not limited to, feed, water, soil, and nutrient media, with which the test substance is combined for administration to a test system.

Control substance means any chemical substance or mixture, or any other material other than a test substance, feed, or water, that is administered to the test system in the course of a study for the purpose of establishing a basis for comparison with the test substance for chemical or biologicaI measurements.

EPA means the U.S. Environmental Protection Agency.

Experimental start date means the first date the test substance is applied to the test system.

Experimental termination date means the last date on which data are collected directly from the study.

FDA means the U.S. Food and Drug Administration.

Person includes an individual, partnership, corporation, association, scientific or academic establishment, government agency, or organizational unit thereof, and any other legal entity.

Quality assurance unit means any person or organizational element, except

the study director, designated by testing facility management to perform the duties relating to quality assurance of the studies.

Raw data means any laboratory worksheets, records, memoranda, notes, or exact copies thereof, that are the result of original observations and activities of a study and are necessary for the reconstruction and evaluation of the report of that study. In the event that exact transcripts of raw data have been prepared (e.g., tapes which have been transcribed verbatim, dated, and verified accurate by signature), the exact copy or exact transcript may be substituted for the original source as raw data. ''Raw data'' may include photographs, microfilm or microfiche copies, computer printouts, magnetic media, including dictated observations, and recorded data from automated instruments.

Reference substance means any chemical substance or mixture, or analytical standard, or material other than a test substance, feed, or water, that is administered to or used in analyzing the test system in the course of a study for the purposes of establishing a basis for comparison with the test substance for known chemical or biological measurements.

Specimen means any material derived from a test system for examination or analysis.

Sponsor means:

(1) A person who initiates and supports, by provision of financial or other resources, a study;

(2) A person who submits a study to the EPA in response to a TSCA section 4(a) test rule and/or a person who submits a study under a TSCA section 4 testing consent agreement or a TSCA section 5 rule or order to the extent the agreement, rule or order references this part; or

(3) A testing facility, if it both initiates and actually conducts the study.

Study means any experiment at one or more test sites, in which a test substance is studied in a test system under laboratory conditions or in the environment to determine or help predict its effects, metabolism, environmental and chemical fate, persistence, or other characteristics in humans, other living organisms, or media. The term ''study'' does not include basic exploratory studies carried out to determine whether a test substance or a test method has any potential utility.

Study completion date means the date the final report is signed by the study director.

Study director means the individual responsible for the overall conduct of a study.

Study initiation date means the date the protocol is signed by the study director.

Test substance means a substance or mixture administered or added to a test system in a study, which substance or mixture is used to develop data to meet the requirements of a TSCA section 4(a) test rule and/or is developed under a TSCA section 4 testing consent agreement or section 5 rule or order to the extent the agreement, rule or order references this part.

Test system means any animal, plant, microorganism, chemical or physical matrix, including but not limited to, soil or water, or components thereof, to which the test, control, or reference substance is administered or added for study. ''Test system'' also includes appropriate groups or components of the system not treated with the test, control, or reference substance.

Testing facility means a person who actually conducts a study, i.e., actually uses the test substance in a test system. ''Testing facility'' encompasses only those operational units that are being or have been used to conduct studies.

TSCA means the Toxic Substances Control Act (15 U.S.C, 2601 *et seq.*)

Vehicle means any agent which facilitates the mixture, dispersion, or solubilization of a test substance with a carrier.

§ 792.10 Applicability to studies performed under grants and contracts.

When a sponsor or other person utilizes the services of a consulting laboratory, contractor, or grantee to perform all or a part of a study to which this part applies, it shall notify the consulting laboratory, contractor, or grantee that the service is, or is part of, a study that must be conducted in compliance with the provisions of this part.

§ 792.12 Statement of compliance or non-compliance.

Any person who submits to EPA a test required by a testing consent agreement or a test rule issued under section 4 of TSCA shall include in the submission a true and correct statement, signed by the sponsor and the study director, of one of the following types:

(a) A statement that the study was conducted in accordance with this part; or

(b) A statement describing in detail all differences between the practices used in the study and those required by this part; or

(c) A statement that the person was not a sponsor of the study, did not conduct the study, and does not know whether the study was conducted in accordance with this part.

§ 792.15 Inspection of a testing facility.

(a) A testing facility shall permit an authorized employee or duly designated representative of EPA or FDA, at reasonable times and in a reasonable manner, to inspect the facility and to inspect (and in the case of records also to copy) all records and specimens required to be maintained regarding studies to which this part applies. The records inspection and copying requirements shall not apply to quality assurance unit records of findings and problems, or to actions recommended and taken, except the EPA may seek production of these records in litigation or formal adjudicatory hearings.

(b) EPA will not consider reliable for purposes of showing that a chemical substance or mixture does not present a risk of injury to health or the environment any data developed by a testing facility or sponsor that refuses to permit inspection in accordance with this part. The determination that a study will not be considered reliable does not, however, relieve the sponsor of a required test of any obligation under any applicable statute or regulation to submit the results of the study to EPA.

(c) Since a testing facility is a place where chemicals are stored or held, it is subject to inspection under section 11 of TSCA.

§ 792.17 Effects of non-compliance.

(a) The sponsor or any other person who is conducting or has conducted a test to fulfill the requirements of a testing consent agreement or a test rule issued under section 4 of TSCA will be in violation of section 15 of TSCA if:

(1) The test is not being or was not conducted in accordance with any requirement of this part;

(2) Data or information submitted to EPA under this part (including the statement required by § 792.12) include information or data that are false or misleading, contain significant omissions, or otherwise do not fulfill the requirements of this part; or

(3) Entry in accordance with § 792.15 for the purpose of auditing test data or inspecting test facilities is denied. Persons who violate the provisions of this part may be subject to civil or criminal penalties under section 16 of TSCA, legal action in United States district court under section 17 of TSCA, or criminal prosecution under 18 U.S.C. 2 or 1001.

(b) EPA, at its discretion, may not consider reliable for purposes of showing that a chemical substance or mixture does not present a risk of injury to health or the environment any study which was not conducted in accordance with this part. EPA, at its discretion, may rely upon such studies for purposes of showing adverse effects. The determination that a study will not be considered reliable does not, however, relieve the sponsor of a required test of the obligation under any applicable statute or regulation to submit the results of the study to EPA.

(c) If data submitted to fulfill a requirement of a testing consent agreement or a test rule issued under section 4 of TSCA are not developed in accordance with this part, EPA may determine that the sponsor has not fulfilled its obligations under section 4 of TSCA and may require the sponsor to develop data in accordance with the requirements of this part in order to satisfy such obligations.

Subpart B—Organization and Personnel

§ 792.29 Personnel.

(a) Each individual engaged in the conduct of or responsible for the supervision of a study shall have education, training, and experience, or combination thereof, to enable that individual to perform the assigned functions.

(b) Each testing facility shall maintain a current summary of training and experience and job description for each individual engaged in or supervising the conduct of a study.

(c) There shall be a sufficient number of personnel for the timely and proper conduct of the study according to the protocol.

(d) Personnel shall take necessary personal sanitation and health precautions designed to avoid contamination of test, control, and reference substances and test systems.

(e) Personnel engaged in a study shall wear clothing appropriate for the duties they perform. Such clothing shall be changed as often as necessary to prevent microbiological, radiological, or chemical contamination of test systems and test, control, and reference substances.

(f) Any individual found at any time to have an illness that may adversely affect the quality and integrity of the study shall be excluded from direct contact with test systems, test, control, and reference substances and any other operation or function that may adversely affect the study until the condition is corrected. All personnel shall be instructed to report to their immediate supervisors any health or medical conditions that may reasonably be considered to have an adverse effect on a study.

§ 792.31 Testing facility management.

For each study, testing facility management shall:

(a) Designate a study director as described in § 792.33 before the study is initiated.

(b) Replace the study director promptly if it becomes necessary to do so during the conduct of a study.

(c) Assure that there is a quality assurance unit as described in § 792.35.

(d) Assure that test, control, and reference substances or mixtures have been appropriately tested for identity, strength, purity, stability, and uniformity, as applicable.

(e) Assure that personnel, resources, facilities, equipment, materials and methodologies are available as scheduled.

(f) Assure that personnel clearly understand the functions they are to perform.

(g) Assure that any deviations from these regulations reported by the quality assurance unit are communicated to the study director and corrective actions are taken and documented.

§ 792.33 Study director.

For each study, a scientist or other professional of appropriate education, training, and experience, or combination thereof, shall be identified as the study director. The study director has overall responsibility for the technical conduct of the study, as well as for the interpretation, analysis, documentation, and reporting of results, and represents the single point of study control. The study director shall assure that:

(a) The protocol, including any change, is approved as provided by § 792.120 and is followed.

(b) All experimental data, including observations of unanticipated responses of the test system are accurately recorded and verified.

(c) Unforeseen circumstances that may affect the quality and integrity of the study are noted when they occur, and corrective action is taken and documented.

(d) Test systems are as specified in the protocol.

(e) All applicable good laboratory practice regulations are followed.

(f) All raw data, documentation, protocols, specimens, and final reports are transferred to the archives during or at the close of the study.

§ 792.35 Quality assurance unit.

(a) A testing facility shall have a quality assurance unit which shall be responsible for monitoring each study to assure management that the facilities, equipment, personnel, methods, practices, records, and controls are in

conformance with the regulations in this part. For any given study, the quality assurance unit shall be entirely separate from and independent of the personnel engaged in the direction and conduct of that study. The quality assurance unit shall conduct inspections and maintain records appropriate to the study.

(b) The quality assurance unit shall:

(1) Maintain a copy of a master schedule sheet of all studies conducted at the testing facility indexed by test substance and containing the test system, nature of study, date study was initiated, current status of each study, identity of the sponsor, and name of the study director.

(2) Maintain copies of all protocols pertaining to all studies for which the unit is responsible.

(3) Inspect each study at intervals adequate to ensure the integrity of the study and maintain written and properly signed records of each periodic inspection showing the date of the inspection, the study inspected, the phase or segment of the study inspected, the person performing the inspection, findings and problems, action recommended and taken to resolve existing problems, and any scheduled date for re-inspection. Any problems which are likely to affect study integrity found during the course of an inspection shall be brought to the attention of the study director and management immediately.

(4) Periodically submit to management and the study director written status reports on each study, noting any problems and the corrective actions taken.

(5) Determine that no deviations from approved protocols or standard operating procedures were made without proper authorization and documentation.

(6) Review the final study report to assure that such report accurately describes the methods and standard operating procedures, and that the reported results accurately reflect the raw data of the study.

(7) Prepare and sign a statement to be included with the final study report which shall specify the dates inspections were made and findings reported to management and to the study director.

(c) The responsibilities and procedures applicable to the quality assurance unit, the records maintained by the quality assurance unit, and the method of indexing such records shall be in writing and shall be maintained. These items including inspection dates, the study inspected, the phase or segment of the study inspected, and the name of the individual performing the inspection shall be made available for inspection to authorized employees or duly designated representatives of EPA or FDA.

(d) An authorized employee or a duly designated representative of EPA or FDA shall have access to the written procedures established for the inspection and may request testing facility management to certify that inspections are being implemented, performed, documented, and followed up in accordance with this paragraph.

Subpart C—Facilities

§ 792.41 General.

Each testing facility shall be of suitable size and construction to facilitate the proper conduct of studies. Testing facilities which are not located within an indoor controlled environment shall be of suitable location to facilitate the proper conduct of studies. Testing facilities shall be designed so that there is a degree of separation that will prevent any function or activity from having an adverse effect on the study.

§ 792.43 Test system care facilities.

(a) A testing facility shall have a sufficient number of animal rooms or other test system areas, as needed, to ensure: proper separation of species or test systems, isolation of individual projects, quarantine or isolation of animals or other test systems, and routine or specialized housing of animals or other test systems.

(1) In tests with plants or aquatic animals, proper separation of species can be accomplished within a room or area by housing them separately in different chambers or aquaria. Separation of species is unnecessary where the protocol specifies the simultaneous exposure of two or more species in the

same chamber, aquarium, or housing unit.

(2) Aquatic toxicity tests for individual projects shall be isolated to the extent necessary to prevent cross-contamination of different chemicals used in different tests.

(b) A testing facility shall have a number of animal rooms or other test system areas separate from those described in paragraph (a) of this section to ensure isolation of studies being done with test systems or test, control, and reference substances known to be biohazardous, including volatile substances, aerosols, radioactive materials, and infectious agents.

(c) Separate areas shall be provided, as appropriate, for the diagnosis, treatment, and control of laboratory test system diseases. These areas shall provide effective isolation for the housing of test systems either known or suspected of being diseased, or of being carriers of disease, from other test systems.

(d) Facilities shall have proper provisions for collection and disposal of contaminated water, soil, or other spent materials. When animals are housed, facilities shall exist for the collection and disposal of all animal waste and refuse or for safe sanitary storage of waste before removal from the testing facility. Disposal facilities shall be so provided and operated as to minimize vermin infestation, odors, disease hazards, and environmental contamination.

(e) Facilities shall have provisions to regulate environmental conditions (e.g., temperature, humidity, photoperiod) as specified in the protocol.

(f) For marine test organisms, an adequate supply of clean sea water or artificial sea water (prepared from deionized or distilled water and sea salt mixture) shall be available. The ranges of composition shall be as specified in the protocol.

(g) For freshwater organisms, an adequate supply of clean water of the appropriate hardness, pH, and temperature, and which is free of contaminants capable of interfering with the study shall be available as specified in the protocol.

(h) For plants, an adequate supply of soil of the appropriate composition, as specified in the protocol, shall be available as needed.

§ 792.45 Test system supply facilities.

(a) There shall be storage areas, as needed, for feed, nutrients, soils, bedding, supplies, and equipment. Storage areas for feed, nutrients, soils, and bedding shall be separated from areas where the test systems are located and shall be protected against infestation or contamination. Perishable supplies shall be preserved by appropriate means.

(b) When appropriate, plant supply facilities shall be provided. These include:

(1) Facilities, as specified in the protocol, for holding, culturing, and maintaining algae and aquatic plants.

(2) Facilities, as specified in the protocol, for plant growth, including but not limited to, greenhouses, growth chambers, light banks, and fields.

(c) When appropriate, facilities for aquatic animal tests shall be provided. These include but are not limited to aquaria, holding tanks, ponds, and ancillary equipment, as specified in the protocol.

§ 792.47 Facilities for handling test, control, and reference substances.

(a) As necessary to prevent contamination or mixups, there shall be separate areas for:

(1) Receipt and storage of the test, control, and reference substances.

(2) Mixing of the test, control, and reference substances with a carrier, e.g., feed.

(3) Storage of the test, control, and reference substance mixtures.

(b) Storage areas for test, control, and/or reference substance and for test, control, and/or reference mixtures shall be separate from areas housing the test systems and shall be adequate to preserve the identity, strength, purity, and stability of the substances and mixtures.

§ 792.49 Laboratory operation areas.

Separate laboratory space and other space shall be provided, as needed, for the performance of the routine and specialized procedures required by studies.

§ 792.51 Specimen and data storage facilities.

Space shall be provided for archives, limited to access by authorized personnel only, for the storage and retrieval of all raw data and specimens from completed studies.

Subpart D—Equipment

§ 792.61 Equipment design.

Equipment used in the generation, measurement, or assessment of data and equipment used for facility environmental control shall be of appropriate design and adequate capacity to function according to the protocol and shall be suitably located for operation, inspection, cleaning, and maintenance.

§ 792.63 Maintenance and calibration of equipment.

(a) Equipment shall be adequately inspected, cleaned, and maintained. Equipment used for the generation, measurement, or assessment of data shall be adequately tested, calibrated, and/or standardized.

(b) The written standard operating procedures required under § 792.81(b)(11) shall set forth in sufficient detail the methods, materials, and schedules to be used in the routine inspection, cleaning, maintenance, testing, calibration, and/or standardization of equipment, and shall specify, when appropriate, remedial action to be taken in the event of failure or malfunction of equipment. The written standard operating procedures shall designate the person responsible for the performance of each operation.

(c) Written records shall be maintained of all inspection, maintenance, testing, calibrating, and/or standardizing operations. These records, containing the date of the operation, shall describe whether the maintenance operations were routine and followed the written standard operating procedures. Written records shall be kept of nonroutine repairs performed on equipment as a result of failure and malfunction. Such records shall document the nature of the defect, how and when the defect was discovered, and any remedial action taken in response to the defect.

Subpart E—Testing Facilities Operation

§ 792.81 Standard operating procedures.

(a) A testing facility shall have standard operating procedures in writing, setting forth study methods that management is satisfied are adequate to insure the quality and integrity of the data generated in the course of a study. All deviations in a study from standard operating procedures shall be authorized by the study director and shall be documented in the raw data. Significant changes in established standard operating procedures shall be properly authorized in writing by management.

(b) Standard operating procedures shall be established for, but not limited to, the following:

(1) Test system room preparation.

(2) Test system care.

(3) Receipt, identification, storage, handling, mixing, and method of sampling of the test, control, and reference substances.

(4) Test system observations.

(5) Laboratory or other tests.

(6) Handling of test systems found moribund or dead during study.

(7) Necropsy of test systems or postmortem examination of test systems.

(8) Collection and identification of specimens.

(9) Histopathology.

(10) Data handling, storage and retrieval.

(11) Maintenance and calibration of equipment.

(12) Transfer, proper placement, and identification of test systems.

(c) Each laboratory or other study area shall have immediately available manuals and standard operating procedures relative to the laboratory or field procedures being performed. Published literature may be used as a supplement to standard operating procedures.

(d) A historical file of standard operating procedures, and all revisions thereof, including the dates of such revisions, shall be maintained.

§ 792.83 Reagents and solutions.

All reagents and solutions in the laboratory areas shall be labeled to indicate identity, titer or concentration,

storage requirements, and expiration date. Deteriorated or outdated reagents and solutions shall not be used.

§ 792.90 Animal and other test system care.

(a) There shall be standard operating procedures for the housing, feeding, handling, and care of animals and other test systems.

(b) All newly received test systems from outside sources shall be isolated and their health status or appropriateness for the study shall be evaluated. This evaluation shall be in accordance with acceptable veterinary medical practice or scientific methods.

(c) At the initiation of a study, test systems shall be free of any disease or condition that might interfere with the purpose or conduct of the study. If during the course of the study, the test systems contract such a disease or condition, the diseased test systems should be isolated, if necessary. These test systems may be treated for disease or signs of disease provided that such treatment does not interfere with the study. The diagnosis, authorization of treatment, description of treatment, and each date of treatment shall be documented and shall be retained.

(d) Warm-blooded animals, adult reptiles, and adult terrestrial amphibians used in laboratory procedures that require manipulations and observations over an extended period of time, or in studies that require these test systems to be removed from and returned to their test system-housing units for any reason (e.g., cage cleaning, treatment, etc.), shall receive appropriate identification (e.g., tattoo, color code, ear tag, ear punch, etc.). All information needed to specifically identify each test system within the test system-housing unit shall appear on the outside of that unit. Suckling mammals and juvenile birds are excluded from the requirement of individual identification unless otherwise specified in the protocol.

(e) Except as specified in paragraph (e)(1) of this section, test systems of different species shall be housed in separate rooms when necessary. Test systems of the same species, but used in different studies, should not ordinarily be housed in the same room when inadvertent exposure to test, control, or reference substances or test system mixup could affect the outcome of either study. If such mixed housing is necessary, adequate differentiation by space and identification shall be made.

(1) Plants, invertebrate animals, aquatic vertebrate animals, and organisms that may be used in multispecies tests need not be housed in separate rooms, provided that they are adequately segregated to avoid mixup and cross contamination.

(2) [Reserved]

(f) Cages, racks, pens, enclosures, aquaria, holding tanks, ponds, growth chambers, and other holding, rearing, and breeding areas, and accessory equipment, shall be cleaned and sanitized at appropriate intervals.

(g) Feed, soil, and water used for the test systems shall be analyzed periodically to ensure that contaminants known to be capable of interfering with the study and reasonably expected to be present in such feed, soil, or water are not present at levels above those specified in the protocol. Documentation of such analyses shall be maintained as raw data.

(h) Bedding used in animal cages or pens shall not interfere with the purpose or conduct of the study and shall be changed as often as necessary to keep the animals dry and clean.

(i) If any pest control materials are used, the use shall be documented. Cleaning and pest control materials that interfere with the study shall not be used.

(j) All plant and animal test systems shall be acclimatized to the environmental conditions of the test, prior to their use in a study.

Subpart F—Test, Control, and Reference Substances

§ 792.105 Test, control, and reference substance characterization.

(a) The identity, strength, purity, and composition, or other characteristics which will appropriately define the test, control, or reference substance shall be determined for each batch and shall be documented before its use in a study. Methods of synthesis, fabrication, or derivation of the test, control,

or reference substance shall be documented by the sponsor or the testing facility, and such location of documentation shall be specified.

(b) When relevant to the conduct of the study the solubility of each test, control, or reference substance shall be determined by the testing facility or the sponsor before the experimental start date. The stability of the test, control or reference substance shall be determined before the experimental start date or concomitantly according to written standard operating procedures, which provide for periodic analysis of each batch.

(c) Each storage container for a test, control, or reference substance shall be labeled by name, chemical abstracts service number (CAS) or code number, batch number, expiration date, if any, and, where appropriate, storage conditions necessary to maintain the identity, strength, purity, and composition of the test, control, or reference substance. Storage containers shall be assigned to a particular test substance for the duration of the study.

(d) For studies of more than 4 weeks experimental duration, reserve samples from each batch of test, control, and reference substances shall be retained for the period of time provided by § 792.195.

(e) The stability of test, control, and reference substances under storage conditions at the test site shall be known for all studies.

§ 792.107 Test, control, and reference substance handling.

Procedures shall be established for a system for the handling of the test, control, and reference substances to ensure that:

(a) There is proper storage.

(b) Distribution is made in a manner designed to preclude the possibility of contamination, deterioration, or damage.

(c) Proper identification is maintained throughout the distribution process.

(d) The receipt and distribution of each batch is documented. Such documentation shall include the date and quantity of each batch distributed or returned.

§ 792.113 Mixtures of substances with carriers.

(a) For each test, control, or reference substance that is mixed with a carrier, tests by appropriate analytical methods shall be conducted:

(1) To determine the uniformity of the mixture and to determine, periodically, the concentration of the test, control, or reference substance in the mixture.

(2) When relevant to the conduct of the experiment, to determine the solubility of each test, control, or reference substance in the mixture by the testing facility or the sponsor before the experimental start date.

(3) To determine the stability of the test, control or reference substance in the mixture before the experimental start date or concomitantly according to written standard operating procedures, which provide for periodic analysis of each batch.

(b) Where any of the components of the test, control, or reference substance carrier mixture has an expiration date, that date shall be clearly shown on the container. If more than one component has an expiration date, the earliest date shall be shown.

(c) If a vehicle is used to facilitate the mixing of a test substance with a carrier, assurance shall be provided that the vehicle does not interfere with the integrity of the test.

Subpart G—Protocol for and Conduct of A Study

§ 792.120 Protocol.

(a) Each study shall have an approved written protocol that clearly indicates the objectives and all methods for the conduct of the study. The protocol shall contain but shall not necessarily be limited to the following information:

(1) A descriptive title and statement of the purpose of the study.

(2) Identification of the test, control, and reference substance by name, chemical abstracts service (CAS) number or code number.

(3) The name and address of the sponsor and the name and address of the testing facility at which the study is being conducted.

(4) The proposed experimental start and termination dates.

(5) Justification for selection of the test system.

(6) Where applicable, the number, body weight, sex, source of supply, species, strain, substrain, and age of the test system.

(7) The procedure for identification of the test system.

(8) A description of the experimental design, including methods for the control of bias.

(9) Where applicable, a description and/or identification of the diet used in the study as well as solvents, emulsifiers and/or other materials used to solubilize or suspend the test, control, or reference substances before mixing with the carrier. The description shall include specifications for acceptable levels of contaminants that are reasonably expected to be present in the dietary materials and are known to be capable of interfering with the purpose or conduct of the study if present at levels greater than established by the specifications.

(10) The route of administration and the reason for its choice.

(11) Each dosage level, expressed in milligrams per kilogram of body or test system weight or other appropriate units, of the test, control, or reference substance to be administered and the method and frequency of administration.

(12) The type and frequency of tests, analyses, and measurements to be made.

(13) The records to be maintained.

(14) The date of approval of the protocol by the sponsor and the dated signature of the study director.

(15) A statement of the proposed statistical method.

(b) All changes in or revisions of an approved protocol and the reasons therefor shall be documented, signed by the study director, dated, and maintained with the protocol.

§ 792.130 Conduct of a study.

(a) The study shall be conducted in accordance with the protocol.

(b) The test systems shall be monitored in conformity with the protocol.

(c) Specimens shall be identified by test system, study, nature, and date of collection. This information shall be located on the specimen container or shall accompany the specimen in a manner that precludes error in the recording and storage of data.

(d) In animal studies where histopathology is required, records of gross findings for a specimen from postmortem observations shall be available to a pathologist when examining that specimen histopathologically.

(e) All data generated during the conduct of a study, except those that are generated by automated data collection systems, shall be recorded directly, promptly, and legibly in ink. All data entries shall be dated on the day of entry and signed or initialed by the person entering the data. Any change in entries shall be made so as not to obscure the original entry, shall indicate the reason for such change, and shall be dated and signed or identified at the time of the change. In automated data collection systems, the individual responsible for direct data input shall be identified at the time of data input. Any change in automated data entries shall be made so as not to obscure the original entry, shall indicate the reason for change, shall be dated, and the responsible individual shall be identified.

§ 792.135 Physical and chemical characterization studies.

(a) All provisions of the GLPs shall apply to physical and chemical characterization studies designed to determine stability, solubility, octanol water partition coefficient, volatility, and persistence (such as biodegradation, photodegradation, and chemical degradation studies).

(b) The following GLP standards shall not apply to studies designed to determine physical and chemical characteristics of a test, control, or reference substance:

Section 792.31 (c), (d), and (g)
Section 792.35 (b) and (c)
Section 792.43
Section 792.45
Section 792.47
Section 792.49
Section 792.81(b) (1), (2), (6) through (9), and (12)
Section 792.90
Section 792.105 (a) through (d)

Section 792.113
Section 792.120(a) (5) through (12), and (15)
Section 792.185(a) (5) through (8), (10), (12), and (14)
Section 792.195 (c) and (d)

Subparts H–I [Reserved]

Subpart J—Records and Reports

§ 792.185 Reporting of study results.

(a) A final report shall be prepared for each study and shall include, but not necessarily be limited to, the following:

(1) Name and address of the facility performing the study and the dates on which the study was initiated and was completed, terminated, or discontinued.

(2) Objectives and procedures stated in the approved protocol, including any changes in the original protocol.

(3) Statistical methods employed for analyzing the data.

(4) The test, control, and reference substances identified by name, chemical abstracts service (CAS) number or code number, strength, purity, and composition, or other appropriate characteristics.

(5) Stability, and when relevant to the conduct of the study, the solubility of the test, control, and reference substances under the conditions of administration.

(6) A description of the methods used.

(7) A description of the test system used. Where applicable, the final report shall include the number of animals or other test organisms used, sex, body weight range, source of supply, species, strain and substrain, age, and procedure used for identification.

(8) A description of the dosage, dosage regimen, route of administration, and duration.

(9) A description of all circumstances that may have affected the quality or integrity of the data.

(10) The name of the study director, the names of other scientists or professionals and the names of all supervisory personnel, involved in the study.

(11) A description of the transformations, calculations, or operations performed on the data, a summary and analysis of the data, and a statement of the conclusions drawn from the analysis.

(12) The signed and dated reports of each of the individual scientists or other professionals involved in the study, including each person who, at the request or direction of the testing facility or sponsor, conducted an analysis or evaluation of data or specimens from the study after data generation was completed.

(13) The locations where all specimens, raw data, and the final report are to be stored.

(14) The statement prepared and signed by the quality assurance unit as described in § 792.35(b)(7).

(b) The final report shall be signed and dated by the study director.

(c) Corrections or additions to a final report shall be in the form of an amendment by the study director. The amendment shall clearly identify that part of the final report that is being added to or corrected and the reasons for the correction or addition, and shall be signed and dated by the person responsible. Modification of a final report to comply with the submission requirements of EPA does not constitute a correction, addition, or amendment to a final report.

(d) A copy of the final report and of any amendment to it shall be maintained by the sponsor and the test facility.

§ 792.190 Storage and retrieval of records and data.

(a) All raw data, documentation, records, protocols, specimens, and final reports generated as a result of a study shall be retained. Specimens obtained from mutagenicity tests, specimens of soil, water, and plants, and wet specimens of blood, urine, feces, and biological fluids, do not need to be retained after quality assurance verification. Correspondence and other documents relating to interpretation and evaluation of data, other than those documents contained in the final report, also shall be retained.

(b) There shall be archives for orderly storage and expedient retrieval of all raw data, documentation, protocols, specimens, and interim and final reports. Conditions of storage shall minimize deterioration of the documents or

specimens in accordance with the requirements for the time period of their retention and the nature of the documents of specimens. A testing facility may contract with commercial archives to provide a repository for all material to be retained. Raw data and specimens may be retained elsewhere provided that the archives have specific reference to those other locations.

(c) An individual shall be identified as responsible for the archives.

(d) Only authorized personnel shall enter the archives.

(e) Material retained or referred to in the archives shall be indexed to permit expedient retrieval.

§ 792.195 Retention of records.

(a) Record retention requirements set forth in this section do not supersede the record retention requirements of any other regulations in this subchapter.

(b)(1) Except as provided in paragraph (c) of this section, documentation records, raw data, and specimens pertaining to a study and required to be retained by this part shall be retained in the archive(s) for a period of at least ten years following the effective date of the applicable final test rule.

(2) In the case of negotiated testing agreements, each agreement will contain a provision that, except as provided in paragraph (c) of this section, documentation records, raw data, and specimens pertaining to a study and required to be retained by this part shall be retained in the archive(s) for a period of at least ten years following the publication date of the acceptance of a negotiated test agreement.

(3) In the case of testing submitted under section 5, except for those items listed in paragraph (c) of this section, documentation records, raw data, and specimens pertaining to a study and required to be retained by this part shall be retained in the archive(s) for a period of at least five years following the date on which the results of the study are submitted to the agency.

(c) Wet specimens, samples of test, control, or reference substances, and specially prepared material which are relatively fragile and differ markedly in stability and quality during storage, shall be retained only as long as the quality of the preparation affords evaluation. Specimens obtained from mutagenicity tests, specimens of soil, water, and plants, and wet specimens of blood, urine, feces, biological fluids, do not need to be retained after quality assurance verification. In no case shall retention be required for longer periods than those set forth in paragraph (b) of this section.

(d) The master schedule sheet, copies of protocols, and records of quality assurance inspections, as required by § 792.35(c) shall be maintained by the quality assurance unit as an easily accessible system of records for the period of time specified in paragraph (b) of this section.

(e) Summaries of training and experience and job descriptions required to be maintained by § 792.29(b) may be retained along with all other testing facility employment records for the length of time specified in paragraph (b) of this section.

(f) Records and reports of the maintenance and calibration and inspection of equipment, as required by § 792.63 (b) and (c), shall be retained for the length of time specified in paragraph (b) of this section.

(g) If a facility conducting testing or an archive contracting facility goes out of business, all raw data, documentation, and other material specified in this section shall be transferred to the archives of the sponsor of the study. The EPA shall be notified in writing of such a transfer.

(h) Specimens, samples, or other nondocumentary materials need not be retained after EPA has notified in writing the sponsor or testing facility holding the materials that retention is no longer required by EPA. Such notification normally will be furnished upon request after EPA or FDA has completed an audit of the particular study to which the materials relate and EPA has concluded that the study was conducted in accordance with this part.

(i) Records required by this part may be retained either as original records or as true copies such as photocopies, microfilm, microfiche, or other accurate reproductions of the original records.

PART 795—PROVISIONAL TEST GUIDELINES

Subpart A [Reserved]

Subpart B—Provisional Chemical Fate Guidelines

Sec.
795.70 Indirect photolysis screening test: Sunlight photolysis in waters containing dissolved humic substances.

Subpart C—Provisional Environmental Effects Guidelines

795.120 Gammarid acute toxicity test.

Subpart D—Provisional Health Effects Guidelines

795.225 Dermal pharmacokinetics of DGBE and DGBA.
795.228 Oral/dermal pharmacokinetics.
795.231 Pharmacokinetics of isopropanal.
795.232 Inhalation and dermal pharmacokinetics of commercial hexane.
795.250 Developmental neurotoxicity screen.

AUTHORITY: 15 U.S.C. 2603.

Subpart A [Reserved]

Subpart B—Provisional Chemical Fate Guidelines

§ 795.70 Indirect photolysis screening test: Sunlight photolysis in waters containing dissolved humic substances.

(a) *Introduction.* (1) Chemicals dissolved in natural waters are subject to two types of photoreaction. In the first case, the chemical of interest absorbs sunlight directly and is transformed to products when unstable excited states of the molecule decompose. In the second case, reaction of dissolved chemical is the result of chemical or electronic excitation transfer from light-absorbing humic species in the natural water. In contrast to direct photolysis, this photoreaction is governed initially by the spectroscopic properties of the natural water.

(2) In general, both indirect and direct processes can proceed simultaneously. Under favorable conditions the measurement of a photoreaction rate constant in sunlight (K_{pE}) in a natural water body will yield a net value that is the sum of two first-order reaction rate constants for the direct (k_{DE}) and indirect (k_{IE}) pathways which can be expressed by the relationship

Equation 1

$$k_{pE}=k_{DE}+k_{IE}.$$

This relationship is obtained when the reaction volume is optically thin so that a negligible fraction of the incident light is absorbed and is sufficiently dilute in test chemical; thus the direct and indirect photoreaction processes become first-order.

(3) In pure water only, direct photoreaction is possible, although hydrolysis, biotransformation, sorption, and volatilization also can decrease the concentraton of a test chemical. By measuring k_{pE} in a natural water and k_{DE} in pure water, k_{IE} can be calculated.

(4) Two protocols have been written that measure k_{DE} in sunlight or predict k_{DE} in sunlight from laboratory measurements with monochromatic light (USEPA (1984) under paragraph (f)(14) and (15) of this section; Mill et al. (1981) under paragraph (f)(9) of this section; Mill et al. (1982) under paragraph (f)(10) of this section; Mill et al. (1983) under paragraphs (f)(11) of this section). As a preface to the use of the present protocol, it is not necessary to know k_{DE}; it will be determined under conditions that definitively establish whether k_{IE} is significant with respect to k_{DE}.

(5) This protocol provides a cost effective test method for measuring k_{IE} for test chemicals in a natural water (synthetic humic water, SHW) derived from commercial humic material. It describes the preparation and standardization of SHW. To implement the method, a test chemical is exposed to sunlight in round tubes containing SHW and tubes containing pure water for defined periods of time based on a screening test.

(6) To correct for variations in solar irradiance during the reaction period, an actinometer is simultaneously insolated. From these data, an indirect photoreaction rate constant is calculated that is applicable to clear-sky, near-surface, conditions in fresh water bodies.

(7) In contrast to k_{DE}, which, once measured, can be calculated for different seasons and latitudes, k_{IE} only applies to the season and latitude for which it is determined. This condition exists because the solar action spectrum for indirect photoreaction in humic-containing waters is not generally known and would be expected to change for different test chemicals. For this reason, k_{pE}, which contains k_{IE}, is likewise valid only for the experimental data and latitude.

(8) The value of k_{pE} represents an atypical quantity because k_{IE} will change somewhat from water body to water body as the amount and quality of dissolved aquatic humic substances change. Studies have shown, however, that for optically-matched natural waters, these differences are usually within a factor of two (Zepp et al. (1981) under paragraph (f)(17) of this section).

(9) This protocol consists of three separate phases that should be completed in the following order: In Phase 1, SHW is prepared and adjusted; in Phase 2, the test chemical is irradiated in SHW and pure water (PW) to obtain approximate sunlight photoreaction rate constants and to determine whether direct and indirect photoprocesses are important; in Phase 3, the test chemical is again irradiated in PW and SHW. To correct for photobleaching of SHW and also solar irradiance variations, tubes containing SHW and actinometer solutions are exposed simultaneously. From these data k_{pE} is calculated that is the sum of k_{IE} and k_{DE} (Equation 1) (Winterle and Mill (1985) under paragraph (f)(12) of this section).

(b) *Phase 1—Preparation and standardization of synthetic natural water*—(1) *Approach*. (i) Recent studies have demonstrated that natural waters can promote the indirect (or sensitized) photoreaction of dissolved organic chemicals. This reactivity is imparted by dissolved organic material (DOM) in the form of humic substances. These materials absorb sunlight and produce reactive intermediates that include singlet oxygen ($^1O_2$) (Zepp et al. (1977) under paragraph (f)(20) of this section, Zepp et al. (1981) under paragraph (f)(17) of this section, Zepp et al. (1981) under paragraph (f)(18) of this section, Wolff et al. (1981) under paragraph (f)(16) of this section, Haag et al. (1984) under paragraph (f)(6) of this section, Haag et al. (1984) under paragraph (f)(7) of this section); peroxy radicals (RO_2-) (Mill et al. (1981) under paragraph (f)(9) of this section; Mill et al. (1983) under paragraph (f)(8) of this section); hydroxyl radicals (HO−) (Mill et al. (1981) under paragraph (f)(9) of this section, Draper and Crosby (1981, 1984) under paragraphs (f)(3) and (4) of this section); superoxide anion ($0_2^{-}-$) and hydroperoxy radicals (HO−). (Cooper and Zika (1983) under paragraph (f)(1) of this section, Draper and Crosby (1983) under paragraph (f)(2) of this section); and triplet excited states of the humic substances (Zepp et al. (1981) under paragraph (f)(17) of this section, Zepp et al. (1985) under paragraph (f)(21) of this section). Synthetic humic waters, prepared by extracting commercial humic or fulvic materials with water, photoreact similarly to natural waters when optically matched (Zepp et al. (1981) under paragraphs (f)(17) and (18) of this section).

(ii) The indirect photoreactivity of a chemical in a natural water will depend on its response to these reactive intermediates, and possibly others yet unknown, as well as the ability of the water to generate such species. This latter feature will vary from water-to-water in an unpredictable way, judged by the complexity of the situation.

(iii) The approach to standardizing a test for indirect photoreactivity is to use a synthetic humic water (SHW) prepared by water-extracting commercial humic material. This material is inexpensive, and available to any laboratory, in contrast to a specific natural water. The SHW can be diluted to a dissolved organic carbon (DOC) content and uv-visible absorbance typical of most surface fresh waters.

(iv) In recent studies it has been found that the reactivity of SHW mixtures depends on pH, and also the history of sunlight exposure (Mill et al. (1983) under paragraph (f)(11) of this section). The SHW solutions initially photobleach with a time-dependent rate constant. As such, an SHW test system has been designed that is buffered to maintain pH and is pre-aged in sunlight to produce, subsequently, a predictable bleaching behavior.

(v) The purpose of Phase 1 is to prepare, pre-age, and dilute SHW to a standard mixture under defined, reproducible conditions.

(2) *Procedure.* (i) Twenty grams of Aldrich humic acid are added to a clean 2-liter Pyrex Erlenmeyer flask. The flask is filled with 2 liters of 0.1 percent NaOH solution. A stir bar is added to the flask, the flask is capped, and the solution is stirred for 1 hour at room temperature. At the end of this time the dark brown supernatant is decanted off and either filtered through coarse filter paper or centrifuged and then filtered through 0.4)m microfilter. The pH is adjusted to 7.0 with dilute H_2SO_4 and filter sterilized through a 0.2)m filter into a rigorously cleaned 2-liter Erlenmeyer flask. This mixture contains roughly 60 ppm DOC and the absorbance (in a 1 cm path length cell) is approximately 1.7 at 313 nm and 0.7 at 370 nm.

(ii) Pre-aging is accomplished by exposing the concentrated solution in the 2-liter flask to direct sunlight for 4 days in early spring or late fall; 3 days in late spring, summer, or early fall. At this time the absorbance of the solution is measured at 370 nm, and a dilution factor is calculated to decrease the absorbance to 0.50 in a 1 cm path length cell. If necessary, the pH is readjusted to 7.0. Finally, the mixture is brought to exact dilution with a precalculated volume of reagent-grade water to give a final absorbance of 0.500 in a 1-cm path length cell at 370 nm. It is tightly capped and refrigerated.

(iii) This mixture is SHW stock solution. Before use it is diluted 10-fold with 0.010 M phosphate buffer to produce a pH 7.0 mixture with an absorbance of 5.00×10^{-2} at 370 nm, and a dissolved organic carbon of about 5 ppm. Such values are characteristic of many surface fresh waters.

(3) *Rationale.* The foregoing procedure is designed to produce a standard humic-containing solution that is pH controlled, and sufficiently aged that its photobleaching first-order rate constant is not time dependent. It has been demonstrated that after 7 days of winter sunlight exposure, SHW solutions photobleached with a nearly constant rate constant (Mill et al. (1983) under paragraph (f)(11) of this section).

(c) *Phase 2—Screening test*—(1) *Introduction and purpose.* (i) Phase 2 measurements provide approximate solar photolysis rate constants and half-lives of test chemicals in PW and SHW. If the photoreaction rate in SHW is significantly larger than in PW (factor of > 2X) then the test chemical is subject to indirect photoreaction and Phase 3 is necessary. Phase 2 data are needed for more accurate Phase 3 measurements, which require parallel solar irradiation of actinometer and test chemical solutions. The actinometer composition is adjusted according to the results of Phase 2 for each chemical, to equalize as much as possible photoreaction rate constants of chemical in SHW and actinometer.

(ii) In Phase 2, sunlight photoreaction rate constants are measured in round tubes containing SHW and then mathematically corrected to a flat water surface geometry. These rate constants are not corrected to clear-sky conditions.

(2) *Procedure.* (i) Solutions of test chemicals should be prepared using sterile, air-saturated, 0.010 M, pH 7.0 phosphate buffer and reagent-grade (or purer) chemicals.[1] Reaction mixtures should be prepared with chemicals at concentrations at less than one-half their solubility in pure water and at concentrations such that, at any wavelengths above 290 nm, the absorbance in a standard quartz sample cell with a 1-cm path length is less than 0.05. If the chemicals are too insoluble in water to permit reasonable handling or analytical procedures, 1-volume percent acetonitrile may be added to the buffer as a cosolvent.

(ii) This solution should be mixed 9.00:1.00 by volume with PW or SHW stock solution to provide working solutions. In the case of SHW, it gives a ten-fold dilution of SHW stock solution. Six mL aliquots of each working solution should then be transferred to separate 12 × 100 mm quartz tubes with screw tops and tightly sealed with Mininert valves.[2] Twenty four tubes are required for each chemical solution

[1] The water should be ASTM Type IIA, or an equivalent grade.

[2] Mininert Teflon sampling vials are available from Alltech Associates, Inc., 202 Campus Dr., Arlington Heights, IL 60004.

(12 samples and 12 dark controls), to give a total of 48 tubes.

(iii) The sample tubes are mounted in a photolysis rack with the tops facing geographically north and inclined 30° from the horizontal. The rack should be placed outdoors over a black background in a location free of shadows and excessive reflection.

(iv) Reaction progress should be measured with an analytical technique that provides a precision of at least ±5 percent. High pressure liquid chromatography (HPLC) or gas chromatograph (GC) have proven to be the most general and precise analytical techniques.

(v) Sample and control solution concentrations are calculated by averaging analytical measurements for each solution. Control solutions should be analyzed at least twice at zero time and at other times to determine whether any loss of chemical in controls or samples has occurred by some adventitious process during the experiment.

(vi) Whenever possible the following procedures should be completed in clear, warm, weather so that solutions will photolyze more quickly and not freeze.

(A) Starting at noon on day zero, expose to sunlight 24 sample tubes mounted on the rack described above. Tape 24 foil-wrapped controls to the bottom of the rack.

(B) Analyze two sample tubes and two unexposed controls in PW and SHW for chemical at 24 hours. Calculate the round tube photolysis rate constants $(k_p)_{SHW}$ and $(k_p)_W$ if the percent conversions are J 20 percent but F 80 percent. The rate constants $(k_p)_{SHW}$ and $(k_p)_W$ are calculated, respectively, from Equations 2 and 3:

Equation 2

$$(k_p)_{SHW}=(1/t)Pn(C_o/C_t)_{SHW} \text{ (in } d^{-1})$$

Equation 3

$$(k_p)_W=(1/t)Pn(C_o/C_t)_W \text{ (in } d^{-1}),$$

where the subscript identifies a reaction in SHW or PW; t is the photolysis time in calendar days; C_o is the initial molar concentration; and C_t is the molar concentration in the irradiated tube at t. In this case t=1 day.

(C) If less than 20 percent conversion occurs in SHW in 1 day, repeat the procedure for SHW and PW at 2 days, 4 days, 8 days, or 16 days, or until 20 percent conversion is reached. Do not extend the experiment past 16 days. If less than 20 percent photoreaction occurs in SHW at the end of 16 days the chemical is ''photoinert''. Phase 3 is not applicable.

(D) If more than 80 percent photoreaction occurs at the end of day 1 in SHW, repeat the experiment with eight each of the remaining foil-wrapped PW and SHW controls. Divide these sets into four sample tubes each, leaving four foil-wrapped controls taped to the bottom of the rack.

(*1*) Expose tubes of chemical in SHW and PW to sunlight starting at 0900 hours and remove one tube and one control at 1, 2, 4, and 8 hours. Analyze all tubes the next day.

(*2*) Extimate $(k_p)_{SHW}$ for the first tube in which photoreaction is J 20 percent but F 80 percent. If more than 80 percent conversion occurs in the first SHW tube, report: ''The half-life is less than one hour'' and end all testing. The chemical is ''photolabile.'' Phase 3 is not applicable.

(*3*) The rate constants $(k_p)_{SHW}$ and $(k_p)_W$ are calculated from equations 2 and 3 but the time of irradiation must be adjusted to reflect the fact that day-averaged rate constants are approximately one-third of rate constants averaged over only 8 daylight hours. For 1 hour of insolation enter t=0.125 day into equation 2. For reaction times of 2, 4, and 8 hours enter 0.25, 0.50 and 1.0 days, respectively. Proceed to Phase 3 testing.

(*4*) Once $(k_p)_{SHW}$ and $(k_p)_W$ are measured, determine the ratio R from equation 4:

Equation 4

$$R=(k_p)_{SHW}/(k_p)_W.$$

The coefficient R, defined by Equation 4, is equal to $[(k_I+k_D)/k_D]$. If R is in the range 0 to 1, the photoreaction is inhibited by the synthetic humic water and Phase 3 does not apply. If R is in the range 1 to 2, the test chemical is marginally susceptable to indirect photolysis. In this case, Phase 3 studies are optional. If R is greater than 2,

Phase 3 measurements are necessary to measure k_{pE} and to evaluate k_{IE}.

(vii) Since the rate of photolysis in tubes is faster than the rate in natural water bodies, values of near-surface photolysis rate constants in natural and pure water bodies, k_{pE} and k_{DE}, respectively, can be obtained from $(k_p)_{SHW}$ and $(k_p)_W$ from Equations 5 and 6:

Equation 5

$$k_{pE}=0.45(k_p)_{SHW}$$

Equation 6

$$k_{DE}=0.45(k_p)_W.$$

The factor 0.45 is an approximate geometric correction for scattered light in tubes versus horizontal surfaces. A rough value of k_{IE}, the rate constant for indirect photolysis in natural waters or SHW, can be estimated from the difference between k_{pE} and k_{DE} using Equation 7:

Equation 7

$$k_{IE}=k_{pE}-k_{DE}.$$

(3) *Criteria for Phase 2.* (i) If no loss of chemical is found in dark control solutions compared with the analysis in tubes at zero time (within experimental error), any loss of chemical in sunlight is assumed to be due to photolysis, and the procedure provides a valid estimate of k_{pE} and k_{DE}. Any loss of chemical in the dark-control solutions may indicate the intervention of some other loss process such as hydrolysis, microbial degradation, or volatilization. In this case, more detailed experiments are needed to trace the problem and if possible eliminate or minimize the source of loss.

(ii) Rate constants determined by the Phase 2 protocol depend upon latitude, season, and weather conditions. Note that $(k_p)_{SHW}$ and k_D values apply to round tubes and k_{pE} and k_{DE} values apply to a natural water body. Because both $(k_p)_{SHW}$ and k_D are measured under the same conditions the ratio $((k_p)_{SHW}/k_D)$ is a valid measure of the susceptibility of a chemical to indirect photolysis. However, since SHW is subject to photobleaching, $(k_p)_{SHW}$ will decrease with time because the indirect rate will diminish. Therefore, R >2 is considered to be a conservative limit because $(k_p)_{SHW}$ will become systematically smaller with time.

(4) *Rationale.* The Phase 2 protocol is a simple procedure for evaluating direct and indirect sunlight photolysis rate constants of a chemical at a specific time of year and latitude. It provides a rough rate constant for the chemical in SHW that is necessary for Phase 3 testing. By comparison with the direct photoreaction rate constant, it can be seen whether the chemical is subject to indirect photoreaction and whether Phase 3 tests are necessary.

(5) *Scope and limitations.* (i) Phase 2 testing separates test chemicals into three convenient categories: ''Photolabile'', ''photoinert'', and those chemicals having sunlight half-lives in round tubes in the range of 1 hour to 50 days. Chemicals in the first two categories fall outside the practical limits of the test, and cannot be used in Phase 3. All other chemicals are suitable for Phase 3 testing.

(ii) The test procedure is simple and inexpensive, but does require that the chemical dissolve in water at sufficient concentrations to be measured by some analytical technique but not have appreciable absorbance in the range 290 to 825 nm. Phase 2 tests should be done during a clear-sky period to obtain the best results. Testing will be less accurate for chemicals with half-lives of less than 1 day because dramatic fluctuations in sunlight intensity can arise from transient weather conditions and the difficulty of assigning equivalent reaction times. Normal diurnal variations also affect the photolysis rate constant. Phase 3 tests should be started as soon as possible after the Phase 2 tests to ensure that the $(k_p)_{SHW}$ estimate remains valid.

(6) *Illustrative Example.* (i) Chemical A was dissolved in 0.010 M pH 7.0 buffer. The solution was filtered through a 0.2)m filter, air saturated, and analyzed. It contained 1.7×10^{-5} M A, five-fold less than its water solubility of 8.5×10^{-5} M at 25 °C. A uv spectrum (1-cm path length) versus buffer blank showed no absorbance greater than 0.05 in the wavelength interval 290 to 825 nm, a condition required for the Phase 2 protocol. The 180 mL mixture was diluted

by the addition of 20 mL of SHW stock solution.

(ii) The SHW solution of A was photolyzed in sealed quartz tubes (12×100 mm) in the fall season starting on October 1. At the end of 1 and 2 days, respectively, the concentration of A was found to be 1.13×10^{-5} M and 0.92×10^{-5} M compared to unchanged dark controls (1.53×10^{-5} M).

(iii) The tube photolysis rate constant of chemical A was calculated from Equation 2 under paragraph (c)(2)(vi)(B) of this section. The first time point at day 1 was used because the fraction of A remaining was in the range 20 to 80 percent:

$(k_p)_{SHW}=(1/1d)Pn(1.53\times10^{-5}/1.13\times10^{-5})$
$(k_p)_{SHW}=0.30\ d^{-1}$.

(iv) From this value, k_{pE} was found to be 0.14 d^{-1} using equation 5 under paragraph (c)(2)(vii) of this section:

$k_{pE}=0.45(0.30\ d^{-1})=0.14d^{-1}$.

(v) From measurements in pure water, k_D for chemical A was found to be 0.085 d^{-1}. Because the ratio of $(k_p)_{SHW}/k_D$(=3.5) is greater than 2, Phase 3 experiments were started.

(d) *Phase 3—Indirect photoreaction with actinometer: Calculation of* k_{IE} *and* k_{pE}—(1) *Introduction and purpose.*

(i) The purpose of Phase 3 is to measure k_{Io}, the indirect photolysis rate constant in tubes, and then to calculate k_{pE} for the test chemical in a natural water. If the approximate $(k_p)_{SHW}$ determined in Phase 2 is not significantly greater than k_D measured for the experiment date of Phase 2, then Phase 3 is unnecessary because the test chemical is not subject to indirect photoreaction.

(ii) In the case $(k_p)_{SHW}$ is significantly larger than k_D, Phase 3 is necessary. The rate constant $(k_p)_{SHW}$ is used to choose an actinometer composition that matches the actinometer rate to the test chemical rate. Test chemical solutions in SHW and in pure water buffer are then irradiated in sunlight in parallel with actinometer solutions, all in tubes.

(iii) The actinometer used is the *p*-nitroacetophenone-pyridine (PNAP/PYR) system developed by Dulin and Mill (1982) under paragraph (f)(5) of this section and is used in two EPA test guidelines (USEPA (1984) under paragraphs (f) (14) and (15) of this section). By varying the pyridine concentration, the PNAP photolysis half-life can be adjusted over a range of several hours to several weeks. The starting PNAP concentration is held constant.

(iv) SHW is subject to photobleaching that decreases its ability to promote indirect photolysis based on its ability to absorb sunlight. This effect will be significant when the test period exceeds a few days. To correct for photobleaching, tubes containing SHW are irradiated in action to the other tubes above.

(v) At any time, the loss of test chemical is given by Equation 8 assuming actinometric correction to constant light flux:

Equation 8

$-(d[C]/dt)=k_I[C]+k_D[C]$.

(vi) The indirect photolysis rate constant, k_I, is actually time dependent because SHW photobleaches; the rate constant k_I, after pre-aging, obeys the formula:

Equation 9

$k_I=k_{Io}\exp(-kt)$,

in which k_{Io} is the initial indirect photoreaction rate constant and k is the SHW photobleaching rate constant. After substituting equation 9 for k_I in Equation 8 under paragraph (d)(1)(v) of this section, and rearranging, one obtains

$-(d[C]/[C]=k_{Io}[\exp(-kt)]dt+k_D\ dt$.

This expression is integrated to give Equation 10:

Equation 10

$Pn(C_o/C)_{SHW}=(k_{Io}/k)[1-\exp(-kt)]+k_D\ t$.

The term (k_{Io}/k) can now be evaluated. Since in pure water, $Pn(C_o/C)_W=k_D\ t$, then subtracting this equation from Equation 10 gives

Equation 11

$Pn(C_o/C)_{SHW}-Pn(c_o/C)_W=(k_{Io}/k)[1-\exp(-kt)]$.

The photobleaching fraction, [1-exp(-kt)], is equivalent to the expression [1-

$(A_{370}/A°_{370})]$, where $A°_{370}$ and A_{370} are the absorbances at 370 nm, and are proportional to humic sensitizer content at times zero and t. Therefore, (k_{Io}/k) is derived from the slope of a linear regression using $[Pn(C_o/C)_{SHW}-Pn(C_o/C)_W]$ as the dependent variable and $[1-(A_{370}/A°_{370})_{SHW}]$ as the independent variable.

(vii) To evaluate k_{Io}, the parameter k has to be evaluated under standard sunlight conditions. Therefore, the photolysis rate constant for the PNAP/PYR actinometer (k_A) is used to evaluate k by linear regression on Equation 12:

Equation 12

$$Pn(A°_{370}/A_{370})=(k/k_A)Pn(C_o/C)_{PNAP},$$

where the slope is (k/k_A) and the value of k_A is calculated from the concentration of pyridine and the absorption of light by PNAP: $k_A=2.2(0.0169)[PYR]k_a$. Values of k_a are listed in the following Table 1.

TABLE 1—DAY AVERAGED RATE CONSTANT (k_a) [1] FOR SUNLIGHT ABSORPTION BY PNAP AS A FUNCTION OF SEASON AND DECADIC LATITUDE [2]

Latitude	Season			
	Spring	Summer	Fall	Winter
20°N	515	551	409	327
30°N	483	551	333	232
40°N	431	532	245	139
50°N	362	496	154	64

[1] k_a=@ e_{ga} L_g in the units of day [1], (Mill et al. (1982) under paragraph (f)(10) of this section).

[2] For use in Equation 15 under paragraph (d)(2)(i) of this section.

The value of k_{Io} is then given by Equation 13:

Equation 13

$$k_{Io}=(k_{Io}/k)(k/k_A)k_A.$$

(viii) To obtain k_D, determine the ratio (k_D/k_A) from a linear regression of $Pn(C_o/C)_W$ versus $Pn(C_o/C)_{PNAP}$ according to Equation 13a:

Equation 13a

$$Pn(C_o/C)_W=(k_D/k_A)Pn(C_o/C)_{PNAP}.$$

The slope is (k_D/k_A), and k_D is obtained by multiplication of this slope with the known value of k_A: i.e., $k_D=(k_D/k_A)k_A$.

(ix) Then, $(k_p)_{SHW}$ values in SHW are determined by summing k_D and K_{Io} as follows:

Equation 14

$$(k_p)_{SHW}=k_{Io}+k_D.$$

(x) Finally, k_{pE} is calculated from the precise relationship, Equation 5a:

Equation 5a

$$k_{pE}=0.455(k_p)_{SHW}.$$

(2) *Procedure.* (i) Using the test chemical photoreaction rate constant in round tubes, $(k_p)_{SHW}$, determined in Phase 2 under paragraph (c) of this section, and the absorption rate constant, $k\alpha$ found in Table 1, under paragraph (d)(1)(vii) of this section, calculate the molar pyridine concentration required by the PNAP/PYR actinometer using Equation 15:

Equation 15

$$[PYR]/M=26.9[(k_p)_{SHW}/k_a].$$

This pyridine concentration makes the actinometer rate constant match the test chemical rate constant.

(A) The variable k_a (= @ e_{ga} L_g) is equal to the day-averaged rate constant for sunlight absorption by PNAP (USEPA (1984) under paragraph (f)(14) of this section; Mill et al. (1982) under paragraph (f)(10) of this section, Zepp and Cline (1977) under paragraph (f)(19) of this section) which changes with season and latitude.

(B) The variable k_a is selected from Table 1 under paragraph (d)(1)(vii) of this section for the season nearest the mid-experiment date of Phase 2 studies and the decadic latitude nearest the experimental site.

(ii) Once [PYR] is determined, an actinometer solution is prepared by adding 1.00 mL of 1.0×10^{-2} M (0.165 gms/100 mL) PNAP stock solution (in CH_3 CN solvent) and the required volume, V, of PYR to a 1 liter volumetric flask. The flask is then filled with distilled water to give 1 liter of solution. The volume V can be calculated from Equation 16:

Equation 16

$$V/mL=[PYR]/0.0124.$$

The PNAP/PYR solutions should be wrapped with aluminum foil and kept out of bright light after preparation.

(iii) The following solutions should be prepared and individually added in 6.00 mL aliquots to 12/100 mm quartz sample tubes; 8 tubes should be filled with each solution:

(A) PNAP/PYR actinometer solution.

(B) Test chemical in pH 7.0, 0.010 M phosphate buffer.

(C) Test chemcial in pH 7.0, 0.010 M phosphate buffer/SHW.

(D) pH 7.0, 0.010 M phosphate buffer/SHW. Four tubes of each set are wrapped in foil and used as controls.

(iv) The tubes are placed in the photolysis rack (Phase 2, Procedure) at 0900 hours on day zero, with the controls taped to the bottom of the rack. One tube of each composition is removed, along with their respective controls, according to a schedule found in Table 2, which categorizes sampling times on the basis of $(k_p)_{SHW}$ determined in Phase 1.

TABLE 2—CATEGORY AND SAMPLING PROCEDURE FOR TEST AND ACTINOMETRY SOLUTIONS

Category	k_p $(d^{-1})_{SHW}$	Sampling procedure
A	5.5 J K_p J 0.69	Sample at 0, 1, 2, 4, and 8h.
B	0.69> k_p J 0.017	Sample at 0, 1, 2, 4, and 8d.
C	0.17> k_p J 0.043	Sample at 0, 4, 8, 16, and 32d.

(v) The tubes containing PNAP, test chemical, and their controls are analyzed for residual concentrations soon after the end of the experiment. PNAP is conveniently analyzed by HPLC, using a 30 cm C_{18} reverse phase column and a uv detector set at 280 nm. The mobile phase is 2 percent acetic acid, 50 percent acetonitrile and 48 percent water (2 mL/min flow rate). Tubes containing only SHW (solution D) should be analyzed by absorption spectroscopy at 370 nm after storage at 4 °C in the dark. The absorbance range to be measured is 0.05 to 0.01 AU (1 cm).

(vi) If controls are well-behaved and show no significant loss of chemical or absorbance change, then k_I can be calculated. In tabular form (see Table 4 under paragraph (d)(6)(iii)(A) of this section) arrange the quantities $Pn(C_o/C_t)_{SHW}$, $Pn(C_o/C_t)_{SHW}$, $[1-(A_{370}/A^o_{370})]$, $Pn(A^o_{370}/A_{370})$, and $Pn(C_o/C)_{PNAP}$ in order of increasing time. According to Equation 11 under paragraph (d)(1)(vi) of this section in the form of Equation 17,

Equation 17

$$Pn(C_o/C)_{SHW} - Pn(C_o/C)_W = (k_{Io}/k)[1-(A_{370}/A^o_{370})],$$

plot the quantities $[Pn(C_o/C_t)_{SHW} - Pn(C_o/C_t)_W]$ versus the independent variable $[1-(A_{370}/A^o_{370})]$. Obtain the slope (S1) by least square linear regression. Under the assumptions of the protocol, $S1=(k_{Io}/k)$.

(vii) According to Equation 12 under paragraph (d)(1)(vii) of this section, plot the quantities $Pn(A^o_{370}/A_{370})$ versus the independent variable $Pn(C_o/C_t)_{PNAP}$. Obtain the slope (S2) by least squares linear regression on Equation 12 under paragraph (d)(1)(vii) of this section. Under the assumptions of the protocol, $S2=(k/k_A)$.

(viii) Then, using Equation 13a under paragraph (d)(1)(vii) of this section, determine the slope (S3) by least squares linear regression. Under the assumptions of the protocol, S3 is equal to (k_D/k_A).

(ix) From Equation 18

Equation 18

$$k_A=0.0372[PYR]k_a,$$

calculate k_A using k_a values found in Table 1 under paragraph (d)(1)(vii) of this section. The value of k_a chosen must correspond to the date closest to the mid-experiment date and latitude closest to that of the experimental site.

(x) The indirect photoreaction rate constant, k_{Io}, is determined using Equation 19,

Equation 19

$$k_{Io}=(S1)(k_A)(S2),$$

by incorporating the quantities k_A, S1, and S2 determined as described in paragraphs (d)(2) (ix), (vi), and (vii) of this section, respectively.

(xi) The rate constant k_D is calculated from Equation 20,

Equation 20

$$k_D=(S3)(k_A),$$

using the quantities S3 and k_A determined as described above.

(xii) Then, $(k_p)_{SHW}$ is obtained by summing k_D and k_{Io}, as described by Equation 14 in paragraph (d)(1)(ix) of this section:

Equation 14

$$(k_p)_{SHW}=k_{Io}+k_D.$$

(xiii) Finally, k_{pE} is obtained by multiplying $(k_p)_{SNW}$ by the factor 0.455, as described by Equation 5a in paragraph (d)(1)(x) of this section:

Equation 5a

$$k_{pE}=0.455\ (k_p)_{SHW}$$

As determined, k_{pE} is the net environmental photoreaction rate constant. It applies to clear sky conditions and is valid for predicting surface photoreaction rates in an average humic containing freshwater body. It is strictly valid only for the experimental latitude and season.

(3) *Criteria for Phase 3.* As in Phase 2, Phase 3 tests are assumed valid if the dark controls are well behaved and show no significant loss of chemical. In such a case, loss of test chemical in irradiated samples is due to photoreaction.

(4) *Rationale.* Simultaneous irradiation of a test chemical and actinometer provide a means of evaluating sunlight intensities during the reaction period. Parallel irradiation of SHW solutions allows evaluation of the extent of photobleaching and loss of sensitizing ability of the natural water.

(5) *Scope and limitations of Phase 3 protocol.* Test chemicals that are classified as having half-lives in SHW in the range of 1 hour to 50 days in Phase 2 listing are suitable for use in Phase 3 testing. Such chemicals have photoreaction half-lives in a range accommodated by the PNAP/PYR actinometry in sunlight and also accommodate the persistence of SHW in sunlight.

(6) *Illustrative example.* (i) From Phase 2 testing, under paragraph (c)(6)(iii) of this section, chemical A was found to have a photolysis rate constant, $(k_p)_{SHW}'$ of 0.30 d^{-1} in fall in round tubes at latitude 33° N. Using Table 1 under paragraph (d)(1)(vii) of this section for 30° N, the nearest decadic latitude, a fall value of k_a equal to 333 d^{-1} is found for PNAP. Substitution of $(k_p)_{SHW}$ and k_a into Equation 15 under paragraph (d)(2)(i) of this section gives [PYR] = 0.0242 M. This is the concentration of pyridine that gives an actinometer rate constant of 0.30 d^{-1} in round tubes in fall at this latitude.

(ii) The actinometer solution was made up by adding a volume of pyridine (1.95 mL) calculated from equation 16 under paragraph (d)(2)(ii) of this section to a 1 liter volumetric flask containing 1.00 mL of 1.00×10^{-2} M PNAP in acetonitrile. The flask was filled to the mark with distilled water to give final concentrations of [PYR]=0.0242 M and [PNAP]=1.00×10^{-5} M. Ten tubes of each of the following solutions were placed in the photolysis rack at 1,200 hours on day zero:

(A) Chemical A (1.53×10^{-5} M) in standard SHW (0.010 M, pH 7 phosphate buffer).

(B) Chemical A (1.53×10^{-5}), in 0.010 M, pH 7 phosphate buffer.

(C) SHW standard solution diluted with water 0.90 to 1.00 to match solution A.

(D) PNAP/PYR actinometer solution. Ten additional foil-wrapped controls of each mixture were taped to the bottom of the rack.

(iii) The test chemical had been placed in category B, Table 2 under the paragraph (d)(2)(iv) of this section, on the basis of its Phase 2 rate constant under paragraph (c) of this section. Accordingly, two tubes of each irradiated solution and two tubes of each blank solution were removed at 0, 1, 2, 4, and 8 days at 1,200 hours. The averaged analytical results obtained at the end of the experiment are shown in the following Table 3.

TABLE 3—CHEMICAL ANALYTICAL RESULTS FOR ILLUSTRATIVE EXAMPLE, PHASE 3

Day	$10^5[C]^{SHW}$, M	$10^5[C]^{W}$, M	A^{SHW}**370**	10^5 [PNAP], M
0	1.53	1.53	0.0500	1.00
1	1.03	1.40	0.0470	0.810

TABLE 3—CHEMICAL ANALYTICAL RESULTS FOR ILLUSTRATIVE EXAMPLE, PHASE 3—Continued

Day	$10^5[C]^{SHW}$, M	$10^5[C]^{W}$, M	$A^{SHW}370$	10^5 [PNAP], M
2	0.760	1.30	0.0440	0.690
4	0.300	1.01	0.0370	0.380
8	0.130	0.800	0.0320	0.220

Data for solutions A through D are given in column 2 through 5, respectively. No significant chemical loss was found in the dark controls.

(A) From these items the functions $Pn(C_o/C)_{SNW}$′ $Pn(C_o/C)_W$′ $[1—(A_{370}/A^o_{370})_{SNW}]$, $Pn(A^o_{370}/A_{370})$, and $Pn(C_o/C)_{PNAP}$ were calculated, as shown in the following Table 4 which was derived from Table 3 under paragraph (d)(6)(iii) of this section:

TABLE 4—PHOTOREACTION FUNCTION FOR ILLUSTRATIVE EXAMPLES, PHASE 3, DERIVED FROM TABLE 3

Day	$Pn(C_o/C)_{SHW}$	$Pn(C_o/C)_W$	$1–(A_{370}/A^o_{370})$	$Pn(A^o370/A_{370})$	$Pn(C_o/C)_{PNAP}$
0	0	0	0	0	0
1	0.396	0.0888	0.0600	0.0618	0.211
2	0.700	0.163	0.120	0.128	0.371
4	1.629	0.415	0.260	0.301	0.968
8	2.465	0.648	0.360	0.446	1.514

(B) Slope $S1=(k_{Io}/k)$ was calculated according to Equation 17 under paragraph (d)(2)(vi) of this section and was found to be 4.96 by a least squares regression with a correlation coefficient equal to 0.9980. The following Figure 1 shows a plot of Equation 17 under paragraph (d)(2)(vi) of this section and its best-fit line.

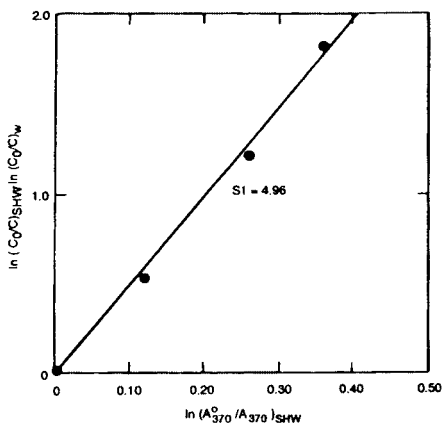

FIGURE 1—GRAPHIC DETERMINATION OF $S1=(K_{Io}/k)$ BASED ON EQUATION 17 UNDER PARAGRAPH (D)(2)(VI) OF THIS SECTION.

(C) Slope $S2=(k/k_a)$ was also derived from Table 4 under paragraph (d)(6)(iii)(A) of this section by a fit of $Pn(A^o_{370}/A_{370})_{SHW}$ and $Pn(C_o/C)_{PNAP}$ to Equation 12 under paragraph (d)(l)(vii) of this section. This plot is displayed in the following Figure 2; the slope S2 was found to be 0.295 and the correlation coefficient was equal to 0.9986.

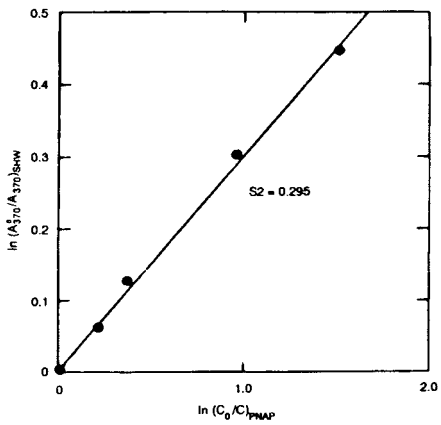

FIGURE 2—GRAPHIC DETERMINATION OF S2=(K/K_A) BASED ON EQUATION 12 UNDER PARAGRAPH (D)(1)(VII) OF THIS SECTION.

(D) Using the data in columns 3 and 6 in Table 4 under paragraph (d)(6)(iii)(A) of this section, slope S3 was calculated by regression from Equation 13a under paragraph (d)(1)(viii) of this section and was found to be 0.428 with correlation coefficient equal to 0.99997.

(E) Using Equation 18 under paragraph (d)(2)(ix) of this section, k_A was found to be $=0.300\ d^{-1}$.

(F) The values of S1, S2, and k_A were then combined in Equation 19 under paragraph (d)(2)(x) of this section to give k_{Io} as follows:

Equation 19

$k_{Io}=(4.96)(0.300)(0.295)=0.439\ d^{-1}$.

(G) The rate constant k_D was calculated from the product of S3 and k_A as expressed in Equation 20 under paragraph (d)(2)(xi) of this section as follows:

Equation 20

$k_D=(0.428)(0.300)=0.128 d^{-1}$.

(H) The sum of k_D and k_{Io} was multiplied by 0.455 to obtain k_{pE} as follows:

Equation 21

$k_{pE}=(0.455)(0.439+0.128) d^{-1}=0.258\ d^{-1}$.

(I) Since k_{pE} is a first-order rate constant, the half-life, $t_{1/2E}$, is given by Equation 22:

Equation 22

$t_{1/2E}=0.693/k_{pE}$.

Substituting the value of k_{pE} from Equation 21 under paragraph (d)(6)(iii)(H) of this section in Equation 22 yielded

Equation 23

$t_{1/2E}=0.693/0.258 d^{-1}=2.7\ d$.

(e) *Data and reporting*—(1) *Test conditions*—(i) *Specific analytical and recovery procedures.* (A) Provide a detailed description or reference for the analytical procedures used, including the calibration data and precision.

(B) If extraction methods were used to separate the solute from the aqueous solution, provide a description of the extraction method as well as the recovery data.

(ii) *Other test conditions.* (A) Report the site and latitude where the photolysis experiments were carried out.

(B) Report the dates of photolysis, weather conditions, times of exposure, and the duration of exposure.

(C) If acetonitrile was used to solubilize the test chemical, report the volume percent.

(D) If a significant loss of test chemical occurred in the control solutions for pure water and SHW, indicate the causes and how they were eliminated or minimized.

(2) *Test data report*—(i) Phase 2 Screening Test under paragraph (c) of this section. (A) Report the initial molar concentration of test chemical, C_o, in pure water and SHW for each replicate and the mean value.

(B) Report the molar concentration of test chemical, C_t, in pure water and SHW for each replicate and the mean value for each time point t.

(C) Report the molar concentration of test chemical for each replicate control sample and the mean value for each time point.

(D) Report the values of $(k_p)_{SHW}$ and $(k_p)_W$ for the time point t in which the fraction of test chemical photoreacted is in the range 20 to 80 percent.

(E) If small losses of test chemical were observed in SHW and pure water, report a first-order rate constant loss, $(k_p)_{loss}$. Calculate and report $(k_p)_{obs}$ for SHW and/or pure water. Calculate and report the corrected first-order rate

constant for SHW and/or pure water using the relationship expressed in Equation 24:

Equation 24

$k_p=(k_p)_{obs}-(k_p)_{loss}$.

(F) Report the value of R calculated from Equation 4 under paragraph (c)(2)(vi)(D)(*4*) of this section.

(G) Report the values of k_{pE} and k_{DE} obtained from Equations 5 and 6, respectively under paragraph (c)(2)(vii) of this section; report the corresponding half-life calculated from Equation 22 under paragraph (d)(6)(iii)(I) of this section.

(ii) Phase 3—Indirect photoreaction with actinometer. (A) Report the initial molar concentration of test chemical, C_o, in pure water and in SHW for each replicate and the mean value.

(B) Report the initial absorbance A^o_{370} of the SNW solution.

(C) Report the initial molar concentration of PNAP of each replicate and the mean value in the actinometer. Report the concentration of pyridine used in the actinometer which was obtained from Equation 15 under paragraph (d)(2)(i) of this section.

(D) Report the time and date the photolysis experiments were started, the time and date the experiments were completed, and the elapsed photolysis time in days.

(E) For each time point t, report the separate values of the absorbance of the SHW solution, and the mean values.

(F) For each time point for the controls, report the separate values of the molar concentrations of test chemical in pure water and SHW, and the absorbance of the SHW solution, and the mean values.

(G) Tabulate and report the following data: t, $[C]^{SHW}$, $[C]^{W}$, A^{SNW}_{370}, [PNAP].

(H) From the data in (G), tabulate and report the following data: t, $Pn(C_o/C)_{SNW}$, $Pn(C_o/C)_W$, $[1-(A_{370}/A^o_{370})SNW]$, $Pn(A^o_{370}/A_{370})$, $Pn(C_o/C)_{PNAP}$.

(I) From the linear regression analysis of the appropriate data in step (H) in Equation 17 under paragraph (d)(2)(vi) of this section, report the slope S1 and the correlation coefficient.

(J) From the linear regression analysis of the appropriate data in step (H) in Equation 12 under paragraph (d)(1)(vii) of this section, report the slope S2 and the correlation coefficient.

(K) From the linear regression analysis of the appropriate data in step (H) in Equation 13a under paragraph (d)(1)(viii) of this section, report the slope S3 and the correlation coefficient.

(L) If loss of chemical was observed during photolysis in pure water and SHW, then report the data $Pn(C_o/C)_{corr}$, $Pn(C_o/C)_{obs}$, $Pn(C_o/C)_{loss}$ as described in paragraph (e)(2)(E) of this section. Repeat steps (H), (I), (J), (K) where applicable and report S1, S2, S3 and the corresponding correlation coefficients.

(M) Report the value of the actinometer rate constant obtained from Equation 18 under paragraph (d)(2)(ix) of this section.

(N) Report the value of k_{Io} obtained from Equation 19 under paragraph (d)(2)(x) of this section.

(O) Report the value of k_D obtained from Equation 20 under paragraph (d)(2)(xi) of this section.

(P) Report the value of $(k_{pE})_{SHW}$, obtained from Equation 14 under paragraph (d)(1)(ix) of this section, and the value of k_{pE} obtained from Equation 5a under paragraph (d)(1)(x) of this section.

(Q) Report the half-life, $t_{1/2E}$, obtained from Equation 22 under paragraph (d)(6)(iii)(I) of this section.

(f) *References.* For additional background information on this test guideline the following references should be consulted.

(1) Cooper W.J., Zika R.G. ''Photochemical formation of hydrogen peroxide in surface and ground waters exposed to sunlight.'' *Science,* 220:711. (1983).

(2) Draper W.M., Crosby D.G. ''The photochemical generation of hydrogen peroxide in natural waters.'' *Archives of Environmental Contamination and Toxicology,* 12:121. (1983).

(3) Draper, W.M. and Crosby D.G. ''Solar photooxidation of pesticides in dilute hydrogen peroxide.'' *Journal of Agricultural and Food Chemistry,* 32:231. (1984).

(4) Draper W.M., Crosby D.G. ''Hydrogen peroxide and hydroxyl radical:

Intermediates in indirect photolysis reactions in water.'' *Journal of Agricultural and Food Chemistry,* 29:699. (1981).

(5) Dulin D., Mill T. ''Development and evaluation of sunlight actinometers.'' *Environmental Science and Technology,* 6:815. (1982).

(6) Haag H.R., Hoigne J., Gassman E., Braun A.M. ''Singlet oxygen in surface waters—Part I; Furfuryl alcohol as a trapping agent.'' *Chemosphere,* 13:631. (1984).

(7) Haag W.R., Hoigne J., Gassman E., Braun A.M. ''Singlet oxygen in surface waters—Part II: Quantum yields of its production by some natural humic materials as a function of wavelength.'' *Chemosphere,* 13:641. (1984).

(8) Mill T., Winterle J.S., Fischer A., Tse D., Mabey W.R., Drossman H., Liu A., Davenport J.E. Toxic substances process data generation and protocol development. Work assignment 12, test standard development. ''Section 3. Indirect photolysis.'' Draft final report. EPA Contract No. 68–03–2981. Environmental Research Laboratory, Office of Research and Development, EPA, Athens, GA, and Office of Pollution Prevention and Toxics, EPA, Washington, DC. (1984).

(9) Mill T., Mabey W.R., Bomberger D.C., Chou T.W., Hendry D.G., Smith J.H. ''Laboratory protocols for evaluating the fate of organic chemicals in air and water. Chapter 3. Photolysis in water. Chapter 4. Oxidation in water.'' EPA 600/3–82–022. Environmental Research Laboratory, Office of Research and Development, EPA, Athens, GA. (1981).

(10) Mill T., Mabey W.R., Winterle J.S., Davenport J.E., Barich V.P., Dulin D.E., Tse D.S., Lee G. ''Design and validation of screening and detailed methods for environmental processes. Apendix C. Lower-tier direct photolysis protocol.'' Draft final report. EPA Contract No. 68–01–6325. Office of Pollution Prevention and Toxics, EPA, Washington, DC. (1982).

(11) Mill T., Davenport J.E., Winterle J.S., Mabey W.R., Dossman H., Tse D., Liu A. Toxic substances process data generation and protocol development. Work assignment 12. ''Appendix B. Upper-tier protocol for direct photolysis in water.'' Draft final report. EPA Contract No. 68–03–2981. Environmental Research Laboratory, Office of Research and Development, EPA, Athens, GA, and Office of Pollution Prevention and Toxics, EPA, Washington, DC. (July 1983).

(12) Winterle J.S., Mill T. Toxic substances process data generation and protocol development. Work assignment 18. ''Indirect photoreaction protocol.'' Draft EPA special report. EPA Contract No. 68–03–2981. Environmental Research Laboratory, Office of Research and Development, EPA, Athens, GA and Office of Pollution Prevention and Toxics, EPA, Washington, DC. (1985).

(13) Mill T., Hendry D.G., Richardson H. ''Free radical oxidants in natural waters.'' *Science,* 207:886. (1980).

(14) U.S. Environmental Protection Agency (USEPA), Office of Pollution Prevention and Toxics (OPPT). ''Chemical fate test guidelines. Test guideline (CG, CS–6000). Photolysis in aqueous solution.'' EPA–560/6–84–003. NTIS publication PB–84–233287. (1984).

(15) USEPA, OPPT. ''Chemical fate test guidelines. Test guildeline (CG, CS–6010). Laboratory determination of the direct photolysis reaction quantum yield in aqueous solution and sunlight photolysis.'' EPA–560/6–84–003. NTIS publication PB–84–233287. (1984).

(16) Wolff C.J.M., Halmans M.T.H., Van der Heijde H.B. ''The formation of singlet oxygen in surface waters.'' *Chemosphere,* 10:59. (1981).

(17) Zepp R.G., Baughman G.L., Schlotzhauer P.F. ''Comparison of photochemical behavior of various humic substances in water: I. Sunlight induced reactions of aquatic pollutants photosensitized by humic substances.'' *Chemosphere,* 10:109. (1981).

(18) Zepp R.G., Baughman G.L., Schlozhauer P.F. ''Comparison of photochemical behavior of various humic substances in water: II. Photosensitized oxygenations.'' *Chemosphere,* 10:119. (1981).

(19) Zepp R.G., Cline D.M. ''Rates of direct photolysis in aquatic environments.'' *Environmental Science and Technology,* 11:359. (1977).

(20) Zepp, R.G., Wolfe N.L., Baughman G.L., Hollis R.C. ''Singlet oxygen in natural waters.'' *Nature,* 267:421. (1977).

(21) Zepp R.G., Schlotzhauer P.F., Merritt S.R. ''Photosensitized transformations involving electronic energy transfer in natural waters: role of humic substances.'' *Environmental Science and Technology,* 19:74. (1985).

[53 FR 34522, Sept. 7, 1988; 53 FR 37393, Sept. 26, 1988]

Subpart C—Provisional Environmental Effects Guidelines

§ 795.120 Gammarid acute toxicity test.

(a) *Purpose.* This guideline is intended for use in developing data on the acute toxicity of chemical substances and mixtures subject to environmental effects test regulations under the Toxic Substances Control Act (TSCA) (Pub. L. 94–469, 90 Stat. 2003 (15 U.S.C. 2601 *et seq.*)). This guideline describes a test to develop data on the acute toxicity of chemicals to gammarids. The United States Environmental Protection Agency (EPA) will use data from this test in assessing the hazard of a chemical to aquatic organisms.

(b) *Definitions.* The definitions in section 3 of TSCA and in part 792 of this chapter, Good Laboratory Practice Standards, apply to this test guideline. The following definitions also apply to this guideline:

Death means the lack of reaction of a test organism to gentle prodding.

Flow-through means a continuous or an intermittent passage of test solution or dilution water through a test chamber or a holding or acclimation tank, with no recycling.

LC50 means the median lethal concentration, i.e., that concentration of a chemical in air or water killing 50 percent of the test batch of organisms within a particular period of exposure (which shall be stated).

Loading means the ratio of the biomass of gammarids (grams, wet weight) to the volume (liters) of test solution in either a test chamber or passing through it in a 24-hour period.

Solvent means a substance (e.g., acetone) which is combined with the test substance to facilitate introduction of the test substance into the dilution water.

Static system means a test chamber in which the test solution is not renewed during the period of the test.

(c) *Test procedures*—(1) *Summary of the test.* In preparation for the test, test chambers are filled with appropriate volumes of dilution water. If a flow-through test is performed, the flow of dilution water through each chamber is adjusted to the rate desired. In a static test, the test substance is introduced into each test chamber. In a flow-through test, the rate in which the test substance is added is adjusted to establish and maintain the desired concentration of test substance in each test chamber. The test is started by randomly introducing gammarids, which have been acclimated to the test conditions, into the test chambers. Gammarids in the test chambers are observed periodically during the test; the dead gammarids are removed and the findings recorded. Dissolved oxygen concentration, pH, temperature, and the concentration of test substance in test chambers are measured at specified intervals. Data collected during the test are used to develop concentration—response curves and LC50 values for the test substance.

(2) [Reserved]

(3) *Range-finding test.* (i) A range-finding test should be conducted to establish test substance concentrations to be used for the definitive test.

(ii) The gammarids shall be exposed to a wide-range of concentrations of the test substance (e.g., 1, 10, 100 mg/1, etc.), usually under static conditions.

(iii) A minimum of five gammarids should be exposed to each concentration of test substance for a period of 96 hours. The exposure period may be shortened if data suitable for determining concentrations in the definitive test can be obtained in less time. Nominal concentrations of the test substance may be acceptable.

(4) *Definitive test.* (i) The purpose of the definitive test is to determine the 24, 48, 72, and 96—hour LC50 values and the concentration-response curves.

(ii) A minimum of 20 gammarids per concentration shall be exposed to five or more concentrations of the test substance chosen in a geometric series in which the ratio is between 1.5 and 2.0 (e.g., 2, 4, 8, 16, 32, 64 mg/L). The range

and number of concentrations to which the organisms are exposed shall be such that in 96 hours there is at least one concentration resulting in mortality greater than 50 and less than 100 percent, and one concentration causing greater than zero and less than 50 percent mortality. An equal number of gammarids may be placed in two or more replicate test chambers. Solvents should be avoided, if possible. If solvents have to be used, a solvent control, as well as a dilution control, shall be tested at the highest solvent concentration employed in the treatments. The solvent should not be toxic or have an effect on the toxicity of the test substance. The concentration of solvent should not exceed 0.1 ml/L.

(iii) Every test shall include a concurrent control using gammarids from the same population or culture container. The control group shall be exposed to the same dilution water, conditions and procedures, except that none of the test substance shall be is added to the chamber.

(iv) The dissolved oxygen concentration, temperature and pH of the test solution shall be measured at the beginning of the test and at 24, 48, 72 and 96 hours in at least one replicate each of the control, and the highest, lowest and middle test concentrations.

(v) The test duration is 96 hours. The test is unacceptable if more than 10 percent of the control organisms die during the test.

(vi) In addition to death, any abnormal behavior or appearance shall also be reported.

(vii) Gammarids shall be randomly assigned to the test chambers. Test chambers shall be positioned within the testing area in a random manner or in a way in which appropriate statistical analyses can be used to determine whether there is any variation due to placement.

(viii) Gammarids shall be introduced into the test chambers after the test substance has been added.

(ix) Observations on compound solubility shall be recorded. The investigator should record the appearance of surface slicks, precipitates, or material adhering to the sides of the test chambers.

(5) [Reserved]

(6) *Analytical measurements*—(i) *Water quality analysis.* The hardness, acidity, alkalinity, pH, conductivity, TOC or COD, and particulate matter of the dilution water shall be measured at the beginning of each definitive test.

(ii) *Collection of samples for measurement of test substance.* Each sample to be analyzed for the test substance concentrations shall be taken at a location midway between the top, bottom, and sides of the test chamber. Samples should not include any surface scum or material dislodged from the bottom or sides. Samples shall be analyzed immediately or handled and stored in a manner which minimizes loss of test substance through microbial degradation, photogradation, chemical reaction, volatilization, or sorption.

(iii) *Measurement of test substance.* (A) For static tests, the concentration of dissolved test substance (that which passes through a 0.45 micron filter) shall be measured in each test chamber at least at the beginning (zero-hour, before gammarids are added) and at the end of the test. During flow-through tests, the concentration of dissolved test substance shall be measured in each test chamber at least at 0 and 96-hours and in at least one chamber whenever a malfunction of the test substance delivery system is observed.

(B) The analytical methods used to measure the amount of test substance in a sample shall be validated before beginning the test. This involves adding a known amount of the test substance to each of three water samples taken from a chamber containing dilution water and the same number of gammarids as are placed in each test chamber. The nominal concentrations of the test substance in these samples should span the concentration range to be used in the test. Validation of the analytical method should be performed on at least two separate days prior to starting the test.

(C) An analytical method is not acceptable if likely degradation products of the test substance give positive or negative interferences, unless it is shown that such degradation products are not present in the test chambers during the test.

(D) Among replicate test chambers, the measured concentrations shall not

vary more than 20 percent. The measured concentration of the test substance in any chamber during the test shall not vary more than plus or minus 30 percent from the measured concentration in that chamber at zero time.

(E) The mean measured concentration of dissolved test substance shall be used to calculate all LC50's and to plot all concentration-response curves.

(d) *Test conditions for definitive test*—(1) *Test species*—(i) *Selection*. (A) The amphipods, *Gammarus fasciatus, G. pseudolimnaeus,* and *G. lacustris* are specified for this test.

(B) Gammarids can be cultured in the laboratory or collected from natural sources. If collected, they must be held in the laboratory for at least 14 days prior to testing.

(C) Gammarids used in a particular test shall be of similar age and/or size and from the same source or culture population.

(ii) *Acclimation*. If the holding water is from the same source as the dilution water, acclimation to the dilution water shall be done gradually over a 48-hour period. The gammarids then shall be held at least 7 days in the dilution water prior to testing. Any changes in water temperature should not exceed 2 °C per day. Gammarids should be held for a minimum of 7 days at the test temperature prior to testing.

(iii) *Care and handling.* Gammarids shall be cultured in dilution water under similar environmental conditions to those used in the test. Organisms shall be handled as little as possible. When handling is necessary it should be done as gently, carefully and quickly as possible. During culturing and acclimation, gammarids shall be observed carefully for signs of stress and mortality. Dead and abnormal individuals shall be discarded.

(iv) *Feeding.* The organisms shall not be fed during testing. During culturing, holding, and acclimation, a sufficient quantity of deciduous leaves, such as maple, aspen, or birch, should be placed in the culture and holding containers to cover the bottom with several layers. These leaves should be aged for at least 30 days in a flow-through system before putting them in aquaria. As these leaves are eaten, more aged leaves should be added. Pelleted fish food may also be added.

(2) *Facilities*—(i) *Apparatus*—(A) Facilities needed to perform this test include:

(*1*) Containers for culturing, acclimating and testing gammarids;

(*2*) Containers for aging leaves under flow-through conditions;

(*3*) A mechanism for controlling and maintaining the water temperature during the culturing, acclimation and test periods;

(*4*) Apparatus for straining particulate matter, removing gas bubbles, or aerating the dilution water, as necessary; and

(*5*) An apparatus for providing a 16-hour light and 8-hour dark photoperiod with a 15- to 30-minute transition period.

(B) Facilities should be well ventilated and free of fumes and disturbances that may affect the test organism.

(C) Test chambers shall be covered loosely to reduce the loss of test solution or dilution water due to evaporation and to minimize the entry of dust or other particulates into the solutions.

(ii) *Construction materials.* Construction materials and equipment that may contact the stock solution, test solution or dilution water should not contain substances that can be leached or dissolved into aqueous solutions in quantities that can alter the test results. Materials and equipment that contact stock or test solutions should be chosen to minimize sorption of test substances. Glass, stainless steel, and perfluorocarbon plastic should be used wherever possible. Concrete, fiberglass, or plastic (e.g., PVC) may be used for holding tanks, acclimation tanks, and water supply systems, but they should be aged prior to use. Rubber, coopper, brass, galvanized metal, and lead should not come in contact with the dilution water, stock solution, or test solution.

(iii) *Test substance delivery system.* In flow-through tests, diluters, metering pump systems or other suitable devices shall be used to deliver the test substance to the test chambers. The system used shall be calibrated before each test. The general operation of the

test substance delivery system shall be checked twice daily during a test. The 24-hour flow shall be equal to at least five times the volume of the test chamber. During a test, the flow rates should not vary more than 10 percent from one test chamber to another.

(iv) *Test chambers.* Test chambers shall contain at least one liter of test solution. Test chambers made of stainless steel should be welded, not soldered. Test chambers made of glass should be glued using clear silicone adhesive. As little adhesive as possible should be left exposed in the interior of the chamber. A substrate, such as a bent piece of stainless steel screen, should be placed on the bottom of each test chamber to provide cover for the gammarids.

(v) *Cleaning of test system.* Test substance delivery systems and test chambers should be cleaned before each test. They should be washed with detergent and then rinsed sequentially with clean water, pesticide-free acetone, clean water, and 5-percent nitric acid, followed by two or more changes of dilution water.

(vi) *Dilution water.* (A) Clean surface or ground water, reconstituted water, or dechlorinated tap water is acceptable as dilution water if gammarids will survive in it for the duration of the culturing, acclimating, and testing periods without showing signs of strees. The quality of the dilution water should be constant enough that the month-to-month variation in hardness, acidity, alkalinity, conductivity, TOC or COD, and particulate matter is not more than 10 percent. The pH should be constant within 0.4 unit. In addition, the dilution water should meet the following specifications measured at least twice a year:

Substance	Maximum concentration
Particulate matter	20 mg/L
Total organic carbon (TOC) or	2 mg/L
chemical oxygen demand (COD)	5 mg/L
Boron, fluoride	100 ug/L
Un-ionized ammonia	1 ug/L
Aluminum, arsenic, chromium, cobalt, copper, iron, lead, nickel, zinc.	1 ug/L
Residual chlorine	3 ug/L
Cadmium, mercury, silver	100 ng/L
Total organophosphorus pesticides	50 ng/L
Total organochlorine pesticides plus:	
polychlorinated biphenyls (PCBs) or	50 ng/L
organic chlorine	25 ng/L

(B) If the dilution water is from a ground or surface water source, conductivity and total organic carbon (TOC) or chemical oxygen demand (COD) shall be measured. Reconstituted water can be made by adding specific amounts of reagent-grade chemicals to deionized or distilled water. Glass-distilled or carbon-filtered deionized water with a conductivity less than 1 micromho/cm is acceptable as the diluent for making reconstituted water.

(C) The concentration of dissolved oxygen in the dilution water shall be between 90 and 100 percent saturation. If necessary, the dilution water can be aerated before the addition of the test substance. All reconstituted water should be aerated before use.

(3) *Test parameters.* Environmental parameters during the test shall be maintained as specified below:

(i) Water temperature of 18 ±1 °C.

(ii) Dissolved oxygen concentration between 60 and 105 percent saturation.

(iii) The number of gammarids placed in a test chamber shall not be so great as to affect the results of the test. Ten gammarids per liter is the recommended level of loading for the static test. Loading requirements for the flow-through test will vary depending on the flow rate of dilution water. The loading should not cause the dissolved oxygen concentration to fall below the recommended levels.

(iv) Photoperiod of 16 hours light and 8 hours darkness.

(e) *Reporting.* The sponsor shall submit to the EPA all data developed by the test that are suggestive or predictive of toxicity. In addition, the test report shall include, but not necessarily be limited to, the following information:

(1) Name and address of the facility performing the study and the dates on which the study was initiated and completed.

(2) Objectives and procedures stated in the approved protocol, including any changes in the original protocol.

(3) Statistical methods employed for analyzing the data.

(4) The test substance identified by name, Chemical Abstracts (CAS) number or code number, source, lot or batch number, strength, purity, and

composition, or other appropriate characteristics.

(5) Stability of the test substance under the conditions of the test.

(6) A description of the methods used, including:

(i) The source of the dilution water, its chemical characteristics (e.g., hardness, pH, etc.) and a description of any pretreatment.

(ii) A description of the test substance delivery system, test chambers, the depth and volume of solution in the chamber, the way the test was begun (e.g., test substance addition), the loading, the lighting, and the flow rate.

(iii) Frequency and methods of measurements and observations.

(7) The scientific name, weight, length, source, and history of the organisms used, and the acclimation procedures and food used.

(8) The concentrations tested, the number of gammarids and replicates per test concentration. The reported results should include:

(i) The results of dissolved oxygen, pH and temperature measurements.

(ii) If solvents are used, the name and source of the solvent, the nominal concentration of the test substance in the stock solution, the highest solvent concentration in the test solution and a description of the solubility determination in water and solvents.

(iii) The measured concentration of the test substance in each test chamber just before the start of the test and at all subsequent sampling periods.

(iv) In each test chamber at each observation period, the number of dead and live test organisms, the percentage of organisms that died, and the number of test organisms that showed any abnormal effects in each test chamber at each observation period.

(v) The 48, 72 and 96-hour LC50's and their 95 percent confidence limits. When sufficient data have been generated, the 24-hour LC50 value also. These calculations should be made using the mean measured test substance concentrations.

(vi) The observed no-effect concentration (the highest concentration tested at which there were no mortalities or abnormal behavioral or physiological effects), if any.

(vii) Methods and data for all chemical analyses of water quality and test substance concentrations, including method validations and reagent blanks.

(9) A description of all circumstances that may have affected the quality or integrity of the data.

(10) The names of the sponsor, study director, principal investigator, names of other scientists or professionals, and the names of all supervisory personnel involved in the study.

(11) A description of the transformations, calculations, or operations performed on the data, a summary and analysis of the data, and a statement of the conclusions drawn from the analysis. Results of the analysis of data should include the calculated LC50 value, 95 percent confidence limits, slope of the transformed concentration-response line, and the results of a goodness-of-fit test (e.g., chi-square test).

(12) The signed and dated reports prepared by any individual scientist or other professional involved in the study, including each person who, at the request or direction of the testing facility or sponsor, conducted an analysis or evaluation of data or specimens from the study after data generation was completed.

(13) The locations where all specimens, raw data, and the final report are stored.

(14) The statement prepared and signed by the quality assurance unit.

[52 FR 24462, July 1, 1987]

Subpart D—Provisional Health Effects Guidelines

§ 795.225 Dermal pharmacokinetics of DGBE and DGBA.

(a) *Purpose.* The purpose of these studies is to determine:

(1) The absorption of diethylene glycol butyl ether (DGBE) after administration by the dermal route.

(2) The biotransformation of DGBE administered dermally.

(3) The dermal absorption of DGBE and diethylene glycol butyl ether acetate (DGBA).

(b) *Test procedures*—(1) *Animal selection*—(i) *Species.* The species utilized for investigating DGBE and DGBA shall be the rat, a species for which historical

data on the toxicity and carcinogenicity of many compounds are available and which is used extensively in percutaneous absorption studies.

(ii) *Animals.* Adult female Sprague Dawley rats shall be used. The rats shall be 7 to 8 weeks old and weigh 180 to 220 grams. Prior to testing, the animals shall be selected at random for each group. Animals showing signs of ill health shall not be used.

(iii) *Animal care.* (A) The animals should be housed in environmentally controlled rooms with 10 to 15 air changes per hour. The rooms should be maintained at a temperature of 25 ±2 °C and humidity of 50 ±10 percent with a 12-hour light/dark cycle per day. The rats should be isolated for at least 7 days prior to use.

(B) During the acclimatization period, the rats should be housed in cages on hardwood chip bedding. All animals shall be provided with conventional laboratory diets and water ad libitum.

(2) *Administration of DGBE and DGBA*—(i) *Test substances.* These studies require the use of ^{14}C-labeled DGBE and DGBA. The use of ^{14}C-DGBE and ^{14}C-DGBA is required for the determinations in paragraphs (a) (1), (2), and (3) of this section because they will facilitate the work and improve the reliability of quantitative determinations.

(ii) *Dosage and treatment.* (A) Two doses of DGBA shall be used in the study, a ''low'' dose and a ''high'' dose. Three doses of DGBE shall be used in the study, a neat ''low'' dose, an aqueous ''low'' dose, and neat ''high'' dose. When administered dermally, the ''high'' dose level should ideally induce some overt toxicity such as weight loss. The ''low'' dose level should correspond to a no observed effect level.

(B) For dermal treatment, the doses shall be applied in a volume adequate to deliver the prescribed doses. The backs of the rats should be lightly shaved with an electric clipper shortly before treatment. The dose shall be applied with a micropipette on a specific area (for example, 2 cm^2) on the freshly shaven skin.

(iii) *Washing efficiency study.* Before initiation of the dermal absorption studies described in paragraph (b)(2)(iv)(A) of this section, an initial washing efficiency experiment shall be performed to assess the extent of removal of the applied DGBE and DGBA by washing with soap and water. Groups of four rats should be lightly anesthetized with sodium pentobarbital. These animals shall then be treated with dermal doses of test substance at the low dose level. Soon after application (5 to 10 minutes) the treated animals shall be washed with soap and water then housed in individual metabolism cages for excreta collection. Urine and feces shall be collected at 8, 24, and 48 hours following dosing. Collection of excreta shall continue every 24 hours if a significant amounts of DGBE, DGBA, or metabolites continue to be eliminated.

(iv) *Determination of absorption, biotransformation, and excretion.* (A) Eight animals shall be dosed once dermally with the low dose of ^{14}C-DGBE.

(B) Eight animals shall be dosed once dermally with the high dose of ^{14}C-DGBE.

(C) Eight animals shall be dosed once dermally with the low dose of ^{14}C-DGBA.

(D) Eight animals shall be dosed once dermally with the high dose of ^{14}C-DGBA.

(E) The high and low doses of ^{14}C-DGBE and ^{14}C-DGBA shall be kept on the skin for 24 hours. After application, the animals shall be placed in metabolism cages for excreta collection. After 24 hours, any test material remaining on the skin will be washed off and the containment cell removed. Radiolabeled material in the wash will be accounted for in the total recovery. Urine and feces shall be collected at 8, 24, 48, 72, and 96 hours after dosing, and if necessary, daily thereafter until at least 90 percent of the dose has been excreted or until 7 days after dosing, whichever occurs first.

(3) *Observation of animals*—(i) *Urinary and fecal excretion.* The quantities of total ^{14}C excreted in urine and feces by rats dosed as specified in paragraph (b)(2)(iv) of this section shall be determined at 8, 24, 48, 72 and 96 hours after dosing, and if necessary, daily thereafter until at least 90 percent of the dose has been excreted or until 7 days after dosing (whichever occurs first). Four animals from each group shall be used for this purpose.

(ii) *Biotransformation after dermal dosing.* Appropriate qualitative and quantitative methods shall be used to assay urine specimens collected from rats dosed with DGBE as specified in paragraph (b)(2)(iv) of this section. Any metabolite which comprises greater than 10 percent of the dose shall be identified.

(c) *Data and reporting*—(1) *Treatment of results.* Data shall be summarized in tabular form.

(2) *Evaluation of results.* All observed results, quantitative or incidental, shall be evaluated by an appropriate statistical method.

(3) *Test report.* In addition to the reporting requirements as specified in the TSCA Good Laboratory Practice Standards, in part 792, subpart J of this chapter, the following specific information shall be reported:

(i) Species, strain, and supplier of laboratory animals.

(ii) Information on the degree (i.e., specific activity for a radiolabel) and sites of labeling of the test substances.

(iii) A full description of the sensitivity and precision of all procedures used to produce the data.

(iv) Relative percent absorption by the dermal route for rats administered low and high doses of ^{14}C-DGBE and ^{14}C-DGBA.

(v) Quantity of isotope, together with percent recovery of the administered dose, in feces and urine.

(vi) Biotransformation pathways and quantities of DGBE and metabolites in urine collected after administering single high and low dermal doses to rats.

[53 FR 5946, Feb. 26, 1988, as amended at 54 FR 41834, Oct. 12, 1989]

§ 795.228 Oral/dermal pharmacokinetics.

(a) *Purpose.* The purposes of these studies are to:

(1) Ascertain whether the pharmacokinetics and metabolism of a chemical substance or mixture (''test substance'') are similar after oral and dermal administration.

(2) Determine bioavailability of a test substance after oral and dermal administration.

(3) Examine the effects of repeated dosing on the pharmacokinetics and metabolism of the test substance.

(b) *Definitions.* (1) *Bioavailability* refers to the rate and relative amount of administered test substance which reaches the systemic circulation.

(2) *Metabolism* means the study of the sum of the processes by which a particular substance is handled in the body and includes absorption, tissue distribution, biotransformation, and excretion.

(3) *Percent absorption* means 100 times the ratio between total excretion of radioactivity following oral or dermal administration and total excretion following intravenous administration of test substance.

(4) *Pharmacokinetics* means the study of the rates of absorption, tissue distribution, biotransformation, and excretion.

(c) *Test procedures*—(1) *Animal selection*—(i) *Species.* The rat shall be used for pharmacokinetics testing because it has been used extensively for metabolic and toxicological studies. For dermal bioavailability studies, the rat and the mini-pig shall be used.

(ii) *Test animals.* For pharmacokinetics testing and dermal studies, adult male and female Sprague-Dawley rats, 7 to 9 weeks of age, shall be used. For dermal studies, young adult minipigs shall also be used. The animals should be purchased from a reputable dealer and shall be identified upon arrival at the testing laboratory. The animals shall be selected at random for the test groups and any animal showing signs of ill health shall not be used. In all studies, unless otherwise specified, each test group shall contain at least 4 animals of each sex for a total of at least 8 animals.

(iii) *Animal care.* (A) The animals shall be housed in environmentally controlled rooms with at least 10 air changes per hour. The rooms shall be maintained at a temperature of 24 ±2 °C and humidity of 50 ±20 percent with a 12-hour light/dark cycle per day. The animals shall be kept in a quarantine facility for at least 7 days prior to use and shall be acclimated to the experimental environment for a minimum of 48 hours prior to administration of the test substance.

(B) During the acclimatization period, the animals shall be housed in suitable cages. All animals shall be

provided with certified feed and tap water *ad libitum*. The mini-pig diet shall be supplemented with adequate amounts of ascorbic acid in the drinking water.

(2) *Administration of test substance*—(i) *Test substance.* The use of a radioactive test substance is required for all studies. Ideally, the purity, radioactive and nonradioactive, is greater than 99 percent. The radioactive and nonradioactive test substances shall be chromatographed separately and together to establish purity and identity. If the purity is less than 99 percent or if the chromatograms differ significantly, EPA should be consulted.

(ii) *Dosage and treatment*—(A) *Intravenous.* The low dose of test substance, in an appropriate vehicle, shall be administered intravenously to groups of rats and mini-pigs of each sex. If feasible, the same low dose should be used for intravenous, oral, and dermal studies.

(B) *Oral.* Two doses of text substance shall be used in the oral study, a low dose and a high dose. The high dose should ideally induce some overt toxicity, such as weight loss. The low dose should correspond to a no-observed effect level. The oral dosing shall be accomplished by gavage or by administering the encapsulated test substance. If feasible, the same high and low doses should be used for oral and dermal studies.

(C) *Dermal.* (*1*) *Dermal treatment.* For dermal treatment, two doses, comparable to the low and high oral doses, shall be dissolved in a suitable vehicle and applied in volumes adequate to deliver comparable doses. The backs of the animals should be lightly shaved with an electric clipper 24 hours before treatment. The test substance shall be applied to the intact shaven skin (approximately 2 cm^2 for rats, 5 cm^2 for mini-pigs). The dosed areas shall be protected with a suitable porous covering which is secured in place, and the animals shall be housed separately.

(*2*) *Washing efficacy study*. Before initiation of the dermal absorption studies, an initial washing efficacy experiment shall be conducted to assess the removal of the applied low dose of the test substance by washing the exposed skin area with soap and water and an appropriate organic solvent. The low dose shall be applied to 4 rats and 4 mini-pigs in accordance with paragraph (c)(2)(ii)(C)(*1*) of this section. After application (5 to 10 minutes), the treated areas of 2 rats and 2 mini-pigs shall be washed with soap and water and the treated areas of the remaining rats and pigs shall be washed with an appropriate solvent. The amounts of test substance recovered in the washings shall be determined to assess efficacy of its removal by washing.

(iii) *Dosing and sampling schedule*—(A) *Rat studies.* After administration of the test substance, each rat shall be placed in a metabolic unit to facilitate collection of excreta. For the dermal studies, excreta from the rats shall also be collected during the 6 hour exposure periods. At the end of each collection period, the metabolic units shall be cleaned to recover any excreta that might adhere to them. All studies, except the repeated dosing study, shall be terminated at 7 days or after at least 90 percent of the radioactivity has been recovered in the excreta, whichever occurs first.

(*1*) *Intravenous study*. Group A shall be dosed once intravenously at the low dose of test substance.

(*2*) *Oral study*. (*i*) Group B shall be dosed once per os with the low dose of test substance.

(*ii*) Group C shall be dosed once per os with the high dose of test substance.

(*3*) *Dermal studies.* Unless precluded by corrosivity, the test substance shall be applied and kept on the skin for a minimum of 6 hours. At the time of removal of the porous covering, the treated area shall be washed with an appropriate solvent to remove any test substance that may be on the skin surface. Both the covering and the washing shall be assayed to recover residual radioactivity. At the termination of the studies, each animal shall be sacrificed and the exposed skin area removed. An appropriate section of the skin shall be solubilized and assayed for radio-activity to ascertain if the skin acts as a reservoir for the test substance. Studies on the dermal absorption of corrosive test substances should be discussed with EPA prior to initiation.

(*i*) Group D shall be dosed once dermally with the low dose of test compound.

(*ii*) Group E shall be dosed once dermally with the high dose of the test substance.

(*4*) *Repeated dosing study*. Group F shall receive a series of single daily oral low doses of nonradioactive test substance over a period of at least 7 days. Twenty-four hours after the last nonradioactive dose, a single oral low dose of radioactive test substance shall be administered. Following dosing with the radioactive substance, the rats shall be placed in individual metabolic units as described in paragraph (c)(2)(iii) of this section. The study shall be terminated at 7 days after the last dose, or after at least 90 percent of the radioactivity has been recovered in the excreta, whichever occurs first.

(B) *Mini-Pig studies.* For all mini-pig studies, the test groups shall consist of four young adult animals. After administration of the test substance, each mini-pig shall be kept in a metabolic unit to facilitate collection of excreta. At the end of each collection period, the metabolic units are to be cleaned to recover any excreta that might adhere to them. All studies shall be terminated at 7 days, or after at least 90 percent of the radio-activity has been recovered in the excreta, whichever occurs first.

(*1*) *Intravenous study*. Group G is to be dosed once intravenously at the low dose of the test substance.

(*2*) *Dermal studies.* Following the experimental guidance described in (c)(2)(iii)(A)(*3*) of this section:

(*i*) Group H shall be dosed once dermally with the low dose of test substance.

(*ii*) Group I shall be dosed once dermally with the high dose of the test substance.

(3) *Types of studies*—(i) *Pharmacokinetics studies*—(A) *Rat studies.* Groups A through F shall be used to determine the kinetics of absorption of the test substance. In the group administered the test substance by intravenous routes, (i.e., Group A), the concentration of radioactivity in blood and excreta shall be measured following administration. In groups administered the test substance by the oral and dermal route (i.e., Groups B, C, D, E and F), the concentration of radioactivity in blood and excreta shall be measured at selected time intervals during and following the exposure period.

(B) *Mini-Pig studies.* Groups G, H, and I shall be used to determine the extent of dermal absorption of the test substance. The amount of radioactivity in excreta shall be determined at selected time intervals.

(ii) *Metabolism studies—Rat studies.* Groups A through F shall be used to determine the metabolism of the test substance. Urine, feces, and expired air shall be collected for identification and quantification of the test substance and metabolites.

(4) *Measurements*—(i) *Pharmacokinetics.* Four animals from each group shall be used for these purposes.

(A) *Rat studies*—(*1*) *Bioavailability*. The levels of radioactivity shall be determined in whole blood, blood plasma or blood serum at 15 and 30 minutes and at 1, 2, 8, 24, 48, and 96 hours after initiation of dosing.

(*2*) *Extent of absorption*. The total quantities of radioactivity shall be determined for excerta collected daily for 7 days or until at least 90 percent of the radioactivity has been recovered in the excreta.

(*3*) *Excretion*. The quantities of radioactivity eliminated in the urine, feces, and expired air shall be determined separately at appropriate time intervals. The collection of carbon dioxide may be discontinued when less than one percent of the dose is found to be exhaled as radioactive carbon dioxide in 24 hours.

(*4*) *Tissue distribution*. At the termination of each study, the quantities of radioactivity in blood and in various tissues, including bone, brain, fat, gastrointestinal tract, gonads, heart, kidney, liver, lungs, muscle, skin, and residual carcass of each animal shall be determined.

(*5*) *Changes in pharmacokinetics.* Results of pharmacokinetics measurements (i.e., bioavailability and extent of absorption, tissue distribution, and excretion) obtained in rats receiving

the single low oral dose of the test substance (Groups B and C) shall be compared to the corresponding results obtained in rats receiving repeated oral doses of the test substance (Group F).

(B) *Mini-Pig studies—Extent of absorption.* The total quantities of radioactivity shall be determined for excreta daily for 7 days or until at least 90 percent of the test substance has been excreted.

(ii) *Metabolism.* Four animals from each group shall be used for these purposes.

(A) *Rat studies—(1) Biotransformation.* Appropriate qualitative and quantitative methods shall be used to assay urine, feces, and expired air collected from rats. Efforts shall be made to identify any metabolite which comprises 5 percent or more of the administered dose and the major radioactive components of blood.

(*2*) *Changes in biotransformation.* Appropriate qualitative and quantitative assay methodology shall be used to compare the composition of radioactive compounds in excreta from rats receiving a single oral dose (Groups B and C) with those in the excreta from rats receiving repeated oral doses (Group H).

(d) *Data and reporting.* The final test report shall include the following:

(1) *Presentation of results.* Numerical data shall be summarized in tabular form. Pharmacokinetic data shall also be presented in graphical form. Qualitative observations shall also be reported.

(2) *Evaluation of results.* All quantitative results shall be evaluated by an appropriate statistical method.

(3) *Reporting results.* In addition to the reporting requirements as specified in 40 CFR part 792, the following specific information shall be reported:

(i) Species and strains of laboratory animals.

(ii) Chemical characterization of the test substance, including:

(A) For the radioactive test substances, information on the site(s) and degree of radiolabeling, including type of label, specific activity, chemical purity, and radiochemical purity.

(B) For the nonradioactive compound, information on chemical purity.

(C) Results of chromatography.

(iii) A full description of the sensitivity, precision, and accuracy of all procedures used to generate the data.

(iv) Percent of absorption of test substance after oral and dermal exposures to rats and dermal exposure to minipigs.

(v) Quantity and percent recovery of radioactivity in feces, urine, expired air, and blood. In dermal studies on rats and mini-pigs, include recovery data for skin, skin washings, and residual radioactivity in the covering as well as results of the washing efficacy study.

(vi) Tissue distribution reported as quantity of radioactivity in blood and in various tissues, including bone, brain, fat, gastrointestinal tract, gonads, heart, kidney, liver, lung, muscle, skin and in residual carcass of rats.

(vii) Materials balance developed from each study involving the assay of body tissues and excreta.

(viii) Biotransformation pathways and quantities of test substance and metabolites in excreta collected after administering single high and low doses to rats.

(ix) Biotransformation pathways and quantities of the test substance and metabolites in excreta collected after administering repeated low doses to rats.

(x) Pharmacokinetics model(s) developed from the experimental data.

[54 FR 33411, Aug. 14, 1989; 54 FR 49844, Dec. 1, 1989; 55 FR 25392, June 21, 1990]

§ 795.231 Pharmacokinetics of isopropanal.

(a) *Purpose.* The purposes of these studies are to:

(1) Ascertain whether the pharmacokinetics and metabolism of the ''test substance'' are similar after oral and inhalation administration.

(2) Determine bioavailability of the test substance after oral and inhalation administration.

(3) Examine the effects of repeated dosing on the pharmacokinetics and metabolism of the test substance.

(b) *Definitions.* (1) ''*Bioavailability*'' refers to the rate and relative amount of administered test substance which reaches the systemic circulation.

(2) ''*Metabolism*'' means the study of the sum of the processes by which a

particular substance is handled in the body, and includes absorption, tissue distribution, biotransformation, and excretion.

(3) ''*Pharmacokinetics*'' means the study of the rates of absorption, tissue distribution, biotransformation, and excretion.

(c) *Test procedures*—(1) *Animal selection*—(i) *Species.* The rat shall be used because it has been used extensively for metabolic and toxicological studies.

(ii) *Test animals.* For pharmacokinetics testing, adult male and female rats (Fischer 344 or strain used for major toxicity testing), 7 to 9 weeks of age, shall be used. The animals should be purchased from a reputable dealer and shall be identified upon arrival at the testing laboratory. The animals shall be selected at random for the testing groups and any animal showing signs of ill health shall not be used. In all studies, unless otherwise specified, each test group shall contain at least four animals of each sex for a total of at least eight animals.

(iii) *Animal care.* (A) Animal care and housing should be in accordance with DHEW Publication No. (NIH)-85-23, 1985, entitled ''Guidelines for the Care and Use of Laboratory Animals.''

(B) The animals should be housed in environmentally controlled rooms with at least 10 air changes per hour. The rooms shall be maintained at a temperature of 22 ±2 °C and humidity of 50 ±20 percent with a 12-hour light/dark cycle per day. The animals shall be kept in a quarantine facility for at least 7 days prior to use and shall be acclimated to the experimental environment for a minimum of 48 hours prior to treatment.

(C) During the acclimatization period, the animals should be housed in suitable cages. All animals shall be provided with certified feed and tap water *ad libitum.*

(2) *Administration of test substance*—(i) *Test substance.* The use of radioactive test substance is required for all materials balance and metabolite identification requirements of the study. Ideally, the purity of both radioactive and nonradioactive test substance should be greater than 99 percent. The radioactive and nonradioactive substances shall be chromatographed separately and together to establish purity and identity. If the purity is less than 99 percent or if the chromatograms differ significantly, EPA should be consulted.

(ii) *Dosage and treatment*—(A) *Intravenous.* The low dose of test substance, in an appropriate vehicle, shall be administered intravenously to four rats of each sex.

(B) *Oral.* Two doses of test substance shall be used in the oral portion of the study, a low dose and a high dose. The high dose should ideally induce some overt toxicity, such as weight loss. The low dose level should correspond to a no-observed effect level. The oral dosing shall be accomplished by gavage or by administering an encapsulated test substance. If feasible, the same high and low doses should be used for oral and dermal studies.

(C) *Inhalation.* Two concentrations of the test substance shall be used in this portion of the study, a low concentration and a high concentration. The high concentration should ideally induce some overt toxicity, while the low concentration should correspond to a no observed level. Inhalation treatment should be conducted using a ''nose-cone'' or ''head only'' apparatus to prevent ingestion of the test substance through ''grooming''.

(iii) *Dosing and sampling schedule.* After administration of the test substance, each rat shall be placed in a separate metabolic unit to facilitate collection of excreta. For the inhalation studies, excreta from the rats shall also be collected during the exposure periods. At the end of each collection period, the metabolic units shall be cleaned to recover any excreta that might adhere to the cages. All studies, except the repeated dose study, shall be terminated at 7 days, or after at least 90 percent of the radioactivity has been recovered in the excreta, whichever occurs first.

(A) *Intravenous study.* Group A shall be dosed once intravenously at the low dose of test substance.

(B) *Oral studies.* (*1*) Group B shall be dosed once *per os* with the low dose of the test substance.

(*2*) Group C shall be dosed once *per os* with the high dose of the test substance.

(C) *Inhalation studies.* A single 6-hour exposure period shall be used for each group.

(*1*) Group D shall be exposed to a mixture of the test substance in air at the low concentration.

(*2*) Group E shall be exposed to a mixture of test substance in air at the high concentration.

(D) *Repeated dosing study.* Group F shall receive a series of single daily oral low doses of nonradioactive test substance over a period of at least 7 consecutive days. Twenty four hours after the last nonradioactive dose, a single oral low dose of radioactive test substance shall be administered. Following dosing with radioactive substance, the rats shall be placed in individual metabolic units as described in paragraph (c)(2)(iii) of this section. The study shall be terminated 7 days after the last dose, or after at least 90 percent of the radioactivity has been recovered in the excreta, whichever occurs first.

(3) *Types of studies*—(i) *Pharmacokinetics studies.* Groups A through F shall be used to determine the kinetics of absorption of the test substance. In groups administered the substance by intravenous or oral routes, (i.e., Groups A, B, C, F), the concentration of radioactivity in blood and excreta including expired air shall be measured following administration. In groups administered the substance by the inhalation route (i.e., Groups D and E), the concentration of radioactivity in blood shall be measured at selected time intervals during and following the exposure period. In the groups administered the substance by inhalation (i.e., Groups D and E), the concentration of radioactivity in excreta (including expired air) shall be measured at selected time intervals following the exposure period. In addition, in the groups administered the substance by inhalation, the concentration of test substance in inspired air shall be measured at selected time intervals during the exposure period.

(ii) *Metabolism studies.* Groups A through F shall be used to determine the metabolism of the test substance. Excreta (urine, feces, and expired air) shall be collected for identification and quantification of test substance and metabolites.

(4) *Measurements*—(i) *Pharmacokinetics.* Four animals from each group shall be used for these purposes.

(A) *Bioavailability.* The levels of radioactivity shall be determined in whole blood, blood plasma or blood serum at 15 minutes, 30 minutes, 1, 2, 3, 6, 9, and 18 hours after dosing; and at 30 minutes, 3, 6, 6.5, 7, 8, 9, 12, and 18 hours after initation of inhalation exposure.

(B) *Extent of absorption.* The total quantities of radioactivity shall be determined for excreta collected daily for 7 days, or after at least 90 percent of the radioactivity has been recovered in the excreta, whichever occurs first.

(C) *Excretion.* The quantities of radioactivity eliminated in the urine, feces, and expired air shall be determined separately at appropriate time intervals. The collection of the intact test substance or its metabolites, including carbon dioxide, may be discontinued when less than 1 percent of the administered dose is found to be exhaled as radioactive carbon dioxide in 24 hours.

(D) *Tissue distribution.* At the termination of each study, the quantities of radioactivity in blood and in various tissues, including bone, brain, fat, gastrointestinal tract, gonads, heart, kidney, liver, lungs, muscle, skin, spleen, and residual carcass of each animal shall be determined.

(E) *Changes in pharmacokinetics.* Results of pharmacokinetics measurements (i.e., biotransformation, extent of absorption, tissue distribution, and excretion) obtained in rats receiving the single low oral dose of test substance (Group B) shall be compared to the corresponding results obtained in rats receiving repeated oral doses of test substance (Group F).

(F) *Biotransformation.* Appropriate qualitative and quantitative methods shall be used to assay urine, feces, and expired air collected from rats. Efforts shall be made to identify any metabolite which comprises 5 percent or more of the dose eliminated.

(G) *Changes in biotransformation.* Appropriate qualitative and quantitative assay methodology shall be used to compare the composition of radioactive substances in excreta from the rats receiving a single oral dose

(Groups B and C) with those in the excreta from rats receiving repeated oral doses (Group F).

(ii) [Reserved]

(d) *Data and reporting.* The final test report shall include the following:

(1) *Presentation of results.* Numerical data shall be summarized in tabular form. Pharmacokinetics data shall also be presented in graphical form. Qualitative observations shall also be reported.

(2) *Evaluation of results.* All quantitative results shall be evaluated by an appropriate statistical method.

(3) *Reporting results.* In addition to the reporting requirements as specified in the EPA Good Laboratory Practice Standards (40 CFR 792.185), the following specific information shall be reported:

(i) Species and strains of laboratory animals.

(ii) Chemical characterization of the test substance, including:

(A) For the radioactive test substance, information on the site(s) and degree of radiolabeling, including type of label, specific activity, chemical purity, and radiochemical purity.

(B) For the nonradioactive substance, information on chemical purity.

(C) Results of chromatography.

(iii) A full description of the sensitivity, precision, and accuracy of all procedures used to generate the data.

(iv) Extent of absorption of the test substance as indicated by: percent absorption of the administered oral dose; and total body burden after inhalation exposure.

(v) Quantity and percent recovery of radioactivity in feces, urine, expired air, and blood.

(vi) Tissue distribution reported as quantity of radioactivity in blood and in various tissues, including bone, brain, fat, gastrointestinal tract, gonads, heart, kidney, liver, lung, muscle, skin, spleen and in residual carcass of each rat.

(vii) Biotransformation pathways and quantities of the test substance and metabolites in excreta collected after administering single high and low doses to rats.

(viii) Biotransformation pathways and quantities of the test substance and metabolites in excreta collected after administering repeated low doses to rats.

(ix) Pharmacokinetics model(s) developed from the experimental data.

[54 FR 43261, Oct. 23, 1989]

§ 795.232 Inhalation and dermal pharmacokinetics of commercial hexane.

(a) *Purposes.* The purposes of these studies are to:

(1) Determine the bioavailability of the test substances after dermal and inhalation administration.

(2) Compare the pharmacokinetics and metabolism of the test substances after intravenous, dermal, and inhalation administration.

(3) Examine the effects of repeated doses on the pharmacokinetics and metabolism of the test substances.

(b) *Definitions.* (1) *Bioavailability* refers to the relative amount of administered test substance which reaches the systemic circulation and the rate at which this process occurs.

(2) *Metabolism* means the sum of the enzymatic and nonenzymatic processes by which a particular substance is handled in the body.

(3) *Pharmacokinetics* means the study of the rates of absorption, tissue distribution, biotransformation, and excretion.

(4) *Low dose* should correspond to 1/10 of the high dose.

(5) *High dose* shall not exceed the lower explosive limit (LEL) and ideally should induce minimal toxicity.

(6) *Test substance* refers to the unlabeled and both radiolabeled mixtures (^{14}C-*n*-hexane and ^{14}C-methylcyclopentane) of commercial hexane used in the testing.

(c) *Test procedures*—(1) *Animal selection*—(i) *Species.* The rat shall be used for pharmacokinetics testing because it has been used extensively for metabolic and toxicological studies.

(ii) *Test animals.* Adult male and female rats shall be used for testing. The rats shall be 7 to 9 weeks old and their weight range should be comparable from group to group. The animals shall be purchased from a reputable dealer and shall be permanently identified upon arrival. The animals shall be selected at random for the testing groups, and any animal showing signs of ill health shall not be used.

(iii) *Animal care.* (A) Animal care and housing shall be in accordance with DHHS/PHS NIH Publication No. 86–23, 1985, ''*Guidelines for the Care and Use of Laboratory Animals.*''

(B) The animals shall be housed in environmentally controlled rooms with at least 10 air changes per hour. The rooms shall be maintained at a temperature of 18 to 26 degrees centigrade and humidity of 40 to 70 percent with a 12–hour light/dark cycle per day. The animal subjects shall be kept in a quarantine facility for at least 7 days prior to use, and shall be acclimated to the experimental environment for a minimum of 48 hours prior to treatment.

(C) During the acclimatization period, the rats shall be housed in suitable cages. All animals shall be provided with certified feed and tap water *ad libitum.*

(2) *Administration of test substances*—(i) *Test substances.* The study will require the use of both radiolabeled and unlabeled test substances. All unlabeled commercial hexane shall be from the same lot number. Two kinds of radiolabeled test substances will be tested. ^{14}C-*n*-hexane shall be the only radiolabeled component of one, and ^{14}C-MCP shall be the only radiolabeled component of the other test substance. The use of both radiolabeled test substances is required for all pharmacokinetics and metabolism studies described in this rule, except for the bioavailability measurements required in (c)(4)(i)(A) of this section. The bioavailability measurements need only be conducted with the test substance containing ^{14}C-*n*-hexane or an unlabeled test substance may be used if it can be demonstrated that the analytical sensitivity of the method used with the unlabeled test substance is equal to or greater than the sensitivity which could be obtained with the radiolabeled test substance. If an unlabeled test substance is used for bioavailability measurements, these measurements shall be extended to include relevant metabolites of *n*-hexane. These test substances shall contain at least 40 liquid volume percent but no more than 55 liquid volume percent *n*-hexane and no less than 10 liquid volume percent methylcyclopentane (MCP) and otherwise conform to the specifications prescribed in the American Society for Testing and Materials Designation D 1836–83 (ASTM D 1836), ''Standard Specification for Commercial Hexanes'', published in the *1986 Annual Book of ASTM Standards: Petroleum Products and Lubricants,* ASTM D 1836–83, pp. 966–967, 1986, which is incorporated by reference in accordance with 5 U.S.C. 552(a). ASTM D 1863–83 is available for public inspection at the National Archives and Records Administration (NARA). For information on the availability of this material at NARA, call 202–741–6030, or go to: *http://www.archives.gov/federal_register/code_of_federal_regulations/ibr_locations.html.* Copies may be obtained from the Non-Confidential Information Center (NCIC) (7407), Office of Pollution Prevention and Toxics, U.S. Environmental Protection Agency, Room B–607 NEM, 401 M Street, SW., Washington, DC 20460, between the hours of 12 p.m. and 4 p.m. weekdays excluding legal holidays. This incorporation by reference was approved by the Director of the Office of the Federal Register in accordance with 5 U.S.C. 552(a) and 1 CFR part 51. This material is incorporated as it exists on the date of approval, and a notice of any change in this material will be published in the FEDERAL REGISTER.

(ii) *Dosage and treatment*—(A) *Intravenous.* An appropriate dose of the test substance shall be administered intravenously. The intravenous data obtained in this portion of the study shall be suitable for the determination of absorption, distribution, and excretion parameters of the test substance. Factors that should be considered in the selection of the intravenous doses are: The acute toxicity of the test substance, the availability of a suitable vehicle (if saline is unsuitable) and the solubility of the test substance in the vehicle.

(B) *Inhalation.* Two concentrations of each test substance shall be used in this portion of the study, a low concentration and a high concentration. The high concentration should induce minimal toxicity, but shall not exceed the lower explosive limit (LEL). The low concentration shall correspond to 1/10 of the high concentration. Inhalation treatment shall be conducted

using a ''nose-cone'' or ''head only'' apparatus to reduce ingestion of the test substance through ''grooming'' or dermal absorption.

(C) *Dermal.* Dermal absorption studies should be conducted by the methodology of Susten, A.S., Dames, B.L. and Niemeier, R.W., ''*In vivo* percutaneous absorption studies of volatile solvents in hairless mice. I. Description of a skin depot'', In: *Journal of Applied Toxicology* 6:43–46, (1986), or by some other suitable method because the test substances have significant volatility. The high and low doses shall be tested in rats.

(iii) *Dosing and sampling schedule.* Each experimental group shall contain at least four animals of each sex. After administration of the test substance, each rat shall be placed in an individual metabolic unit for collection of urine, feces, and expired air. For the dermal studies, excreta from the rats shall also be collected during the exposure periods. At the end of each collection period, the metabolic units shall be cleaned to recover any excreta that might adhere to the units. All studies, except the repeated dose studies, shall be terminated at 7 days, or after at least 90 percent of the administered radioactivity has been recovered in the excreta, whichever occurs first. All studies described below shall be conducted separately with each radiolabeled test substance.

(A) *Intravenous study.* Group A shall be given a single intravenous dose of the radiolabeled test substance to result in a level of commercial hexane in the blood that approximates the level from the other routes of exposure so that the data can be used to determine absorption and excretion parameters.

(B) *Inhalation studies.* A single 6–hour exposure period shall be used for each group.

(*1*) Group B shall be exposed to a mixture of the radiolabeled test substance in air at the low concentration.

(*2*) Group C shall be exposed to a mixture of the radiolabeled test substance in air at the high concentration.

(C) *Dermal studies.* The test substance shall be applied and kept on the skin for a minimum of 6 hours. The covering apparatus components shall be assayed to recover residual radioactivity. At the termination of the studies, each animal shall be sacrificed and the exposed skin area removed. An appropriate section of the skin shall be solubilized and assayed for radioactivity to ascertain whether the skin acts as a reservoir for the test substance.

(*1*) Group D shall be given one dermal, low dose of the radiolabeled test substance.

(*2*) Group E shall be given one dermal, high dose of the radiolabeled test substance.

(D) *Repeated dosing study.* Group F shall receive a series of single daily 6–hour inhalation exposures to unlabeled test substance at the low dose over a period of at least 7 days. A single 6–hour inhalation exposure to the radiolabeled test substance at the low dose shall be administered 24 hours after the last unlabeled exposure. Following administration of the radiolabeled substance, the rats shall be placed in individual metabolic units and excreta collected. The study shall be terminated 7 days after the last exposure, or after at least 90 percent of the radioactivity has been recovered in the excreta, whichever occurs first.

(3) *Types of studies*—(i) *Pharmacokinetics studies.* Groups A through F shall be used to determine the kinetics of absorption of the test substance. In animal subjects administered the test substance intravenously (i.e., Group A), the concentration of test substance in blood and excreta shall be measured following administration. In animal subjects administered the test substance by the inhalation and dermal routes (i.e., Groups B through F), the concentration of test substance in blood shall be measured at selected time intervals during and following the exposure period. In animal subjects administered the test substance by the inhalation route (i.e., Groups B, C, and F) the concentration of test substance in excreta shall be measured following exposure. In animal subjects administered the test substance by the dermal route (i.e., Groups D and E) the concentration of test substance in excreta shall be measured during and following exposure. These measurements allow calculation of uptake, half lives, and clearance. In addition, in the groups

administered the test substance by inhalation (i.e., Groups B, C, and F), the concentration of test substance in the exposure chamber air shall be measured at selected time intervals during the exposure period.

(ii) *Metabolism studies.* Groups A through F shall be used to determine the metabolism of the test substance. Excreta (urine, feces, and expired air) shall be collected for identification and measurement of the quantities of test substance and metabolites.

(4) *Measurements*—(i) *Pharmacokinetics.* At least four animals from each group shall be used for these purposes.

(A) *Bioavailability.* The levels of test substance and relevant metabolites, as appropriate, shall be determined in whole blood, blood plasma or blood serum at appropriate intervals after initiation of intravenous, dermal, and inhalation exposure. The sampling intervals should be compatible with the exposure route under study. The determinations need only be done on animals administered the test substance containing ^{14}C-*n*-hexane or, if the analytical sensitivity is equal or greater, unlabeled test substance may be used.

(B) *Extent of absorption.* The total quantities of radioactivity shall be determined for excreta collected daily for 7 days, or until at least 90 percent of theradioactivity has been recovered in the excreta, whichever occurs first.

(C) *Excretion.* The quantities of radioactivity eliminated in the urine, feces, and expired air shall be determined separately at time intervals that provide accurate measurement of clearance and excretory rates. The collection of carbon dioxide may be discontinued when less than one percent of the dose is found to be exhaled as radioactive carbon dioxide in 24 hours.

(D) *Tissue distribution.* At the termination of each study, the quantities of radioactivity shall be determined in blood and in various tissues, including bone, brain, fat, gastrointestinal tract, gonads, heart, kidney, liver, lungs, muscle, skin, spleen, thymus, and residual carcass of each animal.

(E) *Change in pharmacokinetics.* Results of pharmacokinetics measurements (i.e., biotransformation, extent of absorption, tissue distribution, and excretion) obtained in rats receiving the single inhalation exposure to the low dose of the test substance (Group B) shall be compared to the corresponding results obtained in rats receiving repeated inhalation exposures to the low dose of the test substance (Group F).

(ii) *Metabolism.* At least four animals from each group shall be used for these purposes.

(A) *Biotransformation.* Appropriate qualitative and quantitative methods shall be used to assay urine, feces, and expired air collected from rats. Efforts shall be made to identify any metabolite which comprises 5 percent or more of the dose administered.

(B) *Changes in biotransformation.* Appropriate qualitative and quantitative assay methods shall be used to compare the composition of radioactive compounds in excreta from rats receiving a single inhalation exposure (Groups B and C) with that from rats receiving repeated inhalation exposures (Group F).

(d) *Data and reporting.* The final test report shall include the following:

(1) *Presentation of results.* Numerical data shall be summarized in tabular form. Pharmacokinetics data shall also be presented in graphical form. Qualitative observations shall also be reported.

(2) *Evaluation of results.* All data shall be evaluated by appropriate statistical methods.

(3) *Reporting results.* In addition to the reporting requirements as specified in 40 CFR part 792, the following information shall be reported.

(i) Strain of laboratory animals.

(ii) Chemical characterization of the test substances, including:

(A) For the radiolabeled test substances, information on the sites and degree of radiolabeling, including type of label, specific activity, chemical purity prior to mixing with the unlabeled hexane mixture, and radiochemical purity.

(B) For the unlabeled test substance, information on lot number and the percentage of MCP and *n*-hexane.

(C) Results of chromatography.

(iii) A full description of the sensitivity, precision, and accuracy of all procedures used to obtain the data.

(iv) Percent and rate of absorption of the test substance after inhalation and dermal exposures.

(v) Quantity and percent recovery of radioactivity in feces, urine, expired air, and blood. For dermal studies, include recovery data for skin and residual radioactivity in the covering apparatus.

(vi) Tissue distribution reported as quantity of radioactivity in blood, in various tissues including bone, brain, fat, gastrointestinal tract, gonads, heart, kidney, liver, lung, muscle, skin, spleen, thymus, and in residual carcass.

(vii) Biotransformation pathways, to the extent possible, and quantities of the test substances and metabolites in excreta collected after administering single high and low doses.

(viii) Biotransformation pathways, to the extent possible, and quantities of test substances and metabolites in excreta collected after administering repeated low doses.

(ix) Pharmacokinetics models to the extent they can be developed from the experimental data.

[55 FR 632, Jan. 8, 1990, as amended at 58 FR 34205, June 23, 1993; 60 FR 34466, July 3, 1995; 69 FR 18803, Apr. 9, 2004]

§ 795.250 Developmental neurotoxicity screen.

(a) *Purpose.* In the assessment and evaluation of the toxic characteristics of a chemical, it is important to determine when acceptable exposures in the adult may not be acceptable to a developing organism. This test is designed to provide information on the potential functional and morphologic hazards to the nervous system which may arise in the offspring from exposure of the mother during pregnancy and lactation.

(b) *Principle of the test method.* The test substance is administered to several groups of pregnant animals during gestation and lactation, one dose level being used per group. Offspring are randomly selected from within litters for neurotoxicity evaluation. The evaluation includes observation to detect gross neurological and behavioral abnormalities, determination of motor activity, neuropathological evaluation, and brain weights. Measurements are carried out periodically during both postnatal development and adulthood.

(c) *Test procedures*—(1) *Animal selection*—(i) *Species and strain.* Testing should be performed in the Sprague Dawley rat.

(ii) *Age.* Young adult animals (nulliparous females) shall be used.

(iii) *Sex.* Pregnant females shall be used at each dose level.

(iv) *Number of animals.* The objective is for a sufficient number of pregnant rats to be exposed to ensure that an adequate number of offspring are produced for neurotoxicity evaluation. At least 20 litters are recommended at each dose level. This number assumes a coefficient of variation of 20 to 25 percent for most behavioral tests. If, based upon experience with historical control data or data for positive controls in a given laboratory, the coefficient of variation for a given task is higher than 20 to 25 percent, then calculation of appropriate sample sizes to detect a 20 percent change from control values with 80 percent power would need to be done. For most designs, calculations can be made according to Dixon and Massey (1957) under paragraph (e)(5) of this section, Neter and Wasserman (1974) under paragraph (e)(10) of this section, Sokal and Rohlf (1969) under paragraph (e)(11) of this section, or Jensen (1972) under paragraph (e)(8) of this section.

(A) On day 4 after birth, the size of each litter should be adjusted by eliminating extra pups by random selection to yield, as nearly as possible, 4 males and 4 females per litter. Whenever the number of male or female pups prevents having 4 of each sex per litter, partial adjustment (for example, 5 males and 3 females) is permitted. Adjustments are not appropriate for litters of less than 8 pups. Elimination of runts only is not appropriate. Individual pups should be identified uniquely after standardization of litters. A method that may be used can be found in Adams et al. (1985) under paragraph (e)(1) of this section.

(B) After standardization of litters, males and females shall be randomly assigned to one of each of three behavioral tasks. Alternatively, more than one of the behavioral tasks may be conducted in the same animal. In the

latter case, a minimum of 1 to 2 days should separate the tests when conducted at about the same age.

(C) One male and one female shall be randomly selected from each litter for sacrifice at weaning as specified in paragraph (c)(8) of this section.

(2) *Control group.* A concurrent control group shall be used. This group shall be a sham treated group, or, if a vehicle is used in administering the test substance, a vehicle control group. Animals in the control groups shall be handled in an identical manner to test group animals. The vehicle shall neither be developmentally toxic nor have effects on reproduction.

(3) *Dose levels and dose selection.* (i) At least 3 dose levels plus a control (vehicle control, if a vehicle is used) shall be used.

(ii) If the substance has been shown to be developmentally toxic either in a standard developmental toxicity study or a pilot study, the highest dose level shall be the maximum dose which will not induce *in utero* or neonatal deaths or malformations sufficient to preclude a meaningful evaluation of neurotoxicity.

(iii) In the absence of standard developmental toxicity, unless limited by the physicochemical nature or biologicial properties of the substance, the highest dose level shall induce some overt maternal toxicity but shall not result in a reduction in weight gain exceeding 20 percent during gestation and lactation.

(iv) The lowest dose should not produce any grossly observable evidence of either maternal or developmental neurotoxicity.

(v) The intermediate dose(s) shall be equally spaced between the highest and lowest dose.

(4) *Dosing period.* Day 0 in the test is the day on which a vaginal plug and/or sperm are observed. The dose period shall cover the period from day 6 of gestation through weaning (21 days postnatally).

(5) *Administration of test substance.* The test substance or vehicle should be administered orally by intubation. The test substance shall be administered at the same time each day. The animals shall be weighed periodically and the dosage based on the most recent weight determination.

(6) *Observation of dams.* (i) A gross examination of the dams shall be made at least once each day, before daily treatment. The animals shall be observed by trained technicians who are blind with respect to the animal's treatment, using standardized procedures to maximize inter-observer reliability. Where possible, it is advisable that the same observer be used to evaluate the animals in a given study. If this is not possible, some demonstration of inter-observer reliability is required.

(ii) During the treatment and observation periods, cage-side observations shall include:

(A) Any responses with respect to body position, activity level, coordination of movement, and gait.

(B) Any unusual or bizarre behavior including, but not limited to headflicking, head searching, compulsive biting or licking, self-mutilation, circling, and walking backwards.

(C) The presence of:

(*1*) Convulsions.

(*2*) Tremors.

(*3*) Increased levels of lacrimation and/or red-colored tears.

(*4*) Increased levels of salivation.

(*5*) Piloerection.

(*6*) Pupillary dilation or constriction.

(*7*) Unusual respiration (shallow, labored, dyspneic, gasping, and retching) and/or mouth breathing.

(*8*) Diarrhea.

(*9*) Excessive or diminished urination.

(*10*) Vocalization.

(iii) Signs of toxicity shall be recorded as they are observed, including the time of onset, the degree and duration.

(iv) Animals shall be weighed at least weekly.

(v) The day of delivery of litters shall be recorded.

(7) *Study conduct*—(i) *Observation of offspring.* (A) All offspring shall be examined cage-side daily for gross signs of mortality and morbidity.

(B) All offspring shall be examined outside the cage for gross signs of toxicity whenever they are weighed or removed from their cages for behavioral testing. The offspring shall be observed by trained technicians, who are blind with respect to the animal's treatment

using standardized procedures to maximize inter-observer reliability. Where possible, it is advisable that the same observer be used to evaluate the animals in a given study. If this is not possible, some demonstration of inter-observer reliability is required. At a minimum, the end points outlined in paragraph (c)(6)(ii) of this section shall be monitored as appropriate for the developmental stage being observed.

(C) Any gross signs of toxicity in the offspring shall be recorded as they are observed, including the time of onset, the degree, and duration.

(ii) *Developmental landmarks.* Live pups should be counted and litters weighed by weighing each individual pup at birth, or soon thereafter, and on days 4, 7, 13, 17, and 21, and biweekly thereafter. The age of the pups at the time of the appearance of the following developmental landmarks shall be determined:

(A) *Vaginal opening.* General procedure for this determination may be found in Adams et al. (1985) under paragraph (e)(1) of this section.

(B) *Testes descent.* General procedure for this determination may be found in Adams et al. (1985) under paragraph (e)(1) of this section.

(iii) *Motor activity.* (A) Motor activity shall be monitored specifically on days 13, 17, 21, 45 (±2 days), and 60 (±2 days). Motor activity shall be monitored by an automated activity recording apparatus. The device used shall be capable of detecting both increases and decreases in activity, i.e., baseline activity as measured by the device shall not be so low as to preclude decreases nor so high as to preclude increases. Each device shall be tested by standard procedures to ensure, to the extent possible, reliability of operation across devices and testing of animals within dose groups shall be balanced across devices.

(B) Each animal shall be tested individually. The test session shall be long enough to demonstrate habituation of motor activity in control animals, i.e., to approach asymptotic levels by the last 20 percent of the session. Animals' activity counts shall be collected in equal time periods of no greater than 10 minutes duration. All sessions shall have the same duration. Treatment groups shall be counter-balanced across test times.

(C) Efforts shall be made to ensure that variations in the test conditions are minimal and are not systematically related to treatment. Among the variables which can affect motor activity are sound level, size, and shape of the test cage, temperature, relative humidity, lighting conditions, odors, use of home cage or novel test cage, and environmental distractions.

(D) Additional information on the conduct of a motor activity study may be obtained in the TSCA motor activity guideline, in § 798.6200 of this chapter.

(iv) *Auditory startle test.* An auditory startle habituation test shall be performed on the offspring on days 22 and 60. Details on the conduct of this testing may be obtained in Adams et al. (1985) under paragraph (e)(1) of this section. In performing the auditory startle task, the mean response amplitude on each block of 10 trials (5 blocks of 10 trials per session on each day of testing) shall be made. While use of prepulse inhibition is not a requirement, it may be used at the discretion of the investigator. Details on the conduct of this testing may be obtained from Ison (1984) under paragraph (e)(7) of this section.

(v) *Active avoidance test.* Active avoidance testing shall be conducted beginning at 60 to 61 days of age. Details on the apparatus may be obtained in Brush and Knaff (1959) and on the conduct of testing from Brush (1962), under paragraphs (e)(2) and (e)(4) of this section, respectively; reviews on active avoidance conditioning by Brush (1971) and McAllister and McAllister (1971) can be found under paragraphs (e)(3) and (e)(9) of this section, respectively. In performing the active avoidance task, the following measures should be made:

(A) Mean number of shuttles during the adaptation period preceding each daily session.

(B) Mean number and latency of avoidances per session, presented in blocks of 10 trials (2 blocks of 10 trials per session across 5 sessions).

(C) Mean number and latency of escapes per session, presented in blocks of 10 trials as above.

(D) Mean duration of shocks per session, presented in blocks of 10 trials as above.

(E) Mean number of shuttles during the inter-trial intervals.

(8) *Post-mortem evaluation*—(i) *Age of animals.* One male and one female per litter shall be sacrificed at weaning and the remainder following the last behavioral measures. Neuropathology and brain weight determinations shall be made on animals sacrificed at weaning and after the last behavioral measures.

(ii) *Neuropathology*. Details for the conduct of neuropathology evaluation may be obtained in the TSCA neuropathology guideline, in § 798.6400 of this chapter. At least 6 offspring per dose group shall be randomly selected from each sacrificed group (weaning and adulthood) for neuropathologic evaluation. These animals shall be balanced across litters, and equal numbers of males and females shall be used. The remaining sacrificed animals shall be used to determine brain weight. Animals shall be perfused *in situ* by a generally recognized technique. After perfusion, the brain and spinal cord shall be removed and gross abnormalities noted. Cross-sections of the following areas shall be examined: The forebrain, the center of the cerebrum and midbrain, the cerebellum and pons, and the medulla oblongata; the spinal cord at cervical and lumbar swelling; Gasserian ganglia, dorsal root ganglia, dorsal and ventral root fibers, proximal sciatic nerve (mid-thigh and sciatic notch), sural nerve (at knee), and tibial nerve (at knee). Tissue samples from both the central and peripheral nervous system shall be further immersion-fixed and stored in appropriate fixative for further examination. After dehydration, tissue specimens shall be cleared with xylene and embedded in paraffin or paraplast except for the sural nerve which should be embedded in plastic. A method for plastic embedding is described by Spencer et al. under paragraph (e)(12) of this section. Tissue sections shall be prepared from the tissue blocks. The following general testing sequence is recommended for gathering histopathological data:

(A) *General staining.* A general staining procedure shall be performed on all tissue specimens in the highest treatment group. Hematoxylin and eosin (H&E) shall be used for this purpose. The staining shall be differentiated properly to achieve bluish nuclei with pinkish background.

(B) *Special stains.* Based on the results of the general staining, selected sites and cellular components shall be further evaluated by use of specific techniques. If H&E screening does not provide such information, a battery of stains shall be used to assess the following components in all appropriate required samples: Neuronal body (e.g., Einarson's gallocyanin), axon (e.g., Kluver's Luxol Fast Blue), and neurofibrils (e.g., Bielchosky). In addition, nerve fiber teasing shall be used. A section of normal tissue shall be included in each staining to assure that adequate staining has occurred. Any changes shall be noted and representative photographs shall be taken. If lesions are observed, the special techniques shall be repeated in the next lower treatment group until no further lesions are detectable.

(C) *Alternative technique.* If the anatomical locus of expected neuropathology is well-defined, epoxy-embedded sections stained with toluidine blue may be used for small sized tissue samples. This technique obviates the need for special stains.

(iii) *Brain weight.* At least 10 animals that are not sacrificed for histopathology shall be used to determine brain weight. The animals shall be decapitated and the brains carefully removed, blotted, chilled, and weighed. The following dissection shall be performed on an ice-cooled glass plate: First, the rhombencephalon is separated by a transverse section from the rest of the brain and dissected into the cerebellum and the medulla oblongata/pons. A transverse section is made at the level of the ''optic chiasma'' which delimits the anterior part of the hypothalamus and passes through the anterior commissure. The cortex is peeled from the posterior section and added to the anterior section. This divides the brain into four sections, the telencephalon, the diencephalon/midbrain, the medulla oblongata/pons, and the cerebellum. Sections shall be

weighed as soon as possible after dissection to avoid drying. Detailed methodology is available in Glowinski and Iversen (1966) under paragraph (e)(6) of this section.

(d) *Data reporting and evaluation.* In addition to the reporting requirements specified in part 792, subpart J of this chapter, the final test report shall include the following information.

(1) *Description of system and test methods.* (i) A detailed description of the procedures used to standardize observation and operational definitions for scoring observations.

(ii) Positive control data from the laboratory performing the test that demonstrate the sensitivity of the procedures being used. These data do not have to be from studies using prenatal exposures. However, the laboratory must demonstrate competence in testing neonatal animals perinatally exposed to chemicals and establish test norms for the appropriate age group.

(iii) Procedures for calibrating and assuring the equivalence of devices and balancing treatment groups.

(iv) A short justification explaining any decisions where professional judgement is involved such as fixation technique and choice of stains.

(2) *Results.* The following information shall be arranged by test group dose level.

(i) In tabular form, data for each animal shall be provided showing:

(A) Its identification number and litter from which it came.

(B) Its body weight and score on each developmental landmark at each observation time; total session activity counts and intrasession subtotals on each day measured; auditory startle response magnitude session counts and intrasession subtotals on each day measured; avoidance session counts and intrasession counts on each day measured; time and cause of death (if appropriate); locations, nature or frequency, and severity of the lesions; total brain weight; absolute weight of each of the four sections; and weight of each section as a percentage of total brain weight. A commonly used scale such as 1+, 2+, 3+, and 4+ for degree of severity of lesions ranging from very slight to extensive may be used for morphologic evaluation. Any diagnoses derived from neurologic signs and lesions, including naturally occurring diseases or conditions, shall also be recorded.

(ii) Summary data for each group shall include:

(A) The number of animals at the start of the test.

(B) Body weights of the dams during gestation and lactation.

(C) Litter size and mean weight at birth.

(D) The number of animals showing each observation score at each observation time.

(E) The percentage of animals showing each abnormal sign at each observation time.

(F) The mean and standard deviation for each continuous end point at each observation time. These will include body weight, motor activity counts, acoustic startle responses, performance in active avoidance tests, and brain weights (both absolute and relative).

(G) The number of animals in which any lesion was found.

(H) The number of animals affected by each different type of lesion, the average grade of each type of lesion, and the frequency of each different type and/or location of lesions.

(3) *Evaluation of data.* An evaluation of the test results shall be made. The evaluation shall include the relationship between the doses of the test substance and the presence or absence, incidence, and severity of any neurotoxic effect. The evaluation shall include appropriate statistical analyses. The choice of analyses shall consider tests appropriate to the experimental design and needed adjustments for multiple comparisons.

(e) *References.* For additional background information on this test guideline, the following references should be consulted:

(1) Adams, J., Buelke-Sam, J., Kimmel, C.A., Nelson, C.J., Reiter, L.W., Sobotka, T.J., Tilson, H.A., and Nelson, B.K. ''Collaborative behavioral teratology study: Protocol design and testing procedure.'' *Neurobehavioral Toxicology and Teratology*. 7: 579–586. (1985).

(2) Brush, F.R. ''The effects of intertrial interval on avoidance learning in the rat.'' *Journal of Comparative Physiology and Psychology*. 55: 888–892. (1962).

(3) Brush, F.R. ''Retention of aversively motivated behavior.'' In: ''Adverse Conditioning and Learning.'' Brush, F.R., ed., New York: Academic Press. (1971).

(4) Brush, F.R. and Knaff, P.R. ''A device for detecting and controlling automatic programming of avoidance-conditioning in a shuttle-box.'' *American Journal of Psychology*. 72: 275–278 (1959).

(5) Dixon, W.J. and Massey, E.J. ''Introduction to Statistical Analysis.'' 2nd ed. New York: McGraw-Hill. (1957).

(6) Glowinski, J. and Iversen, L.L. ''Regional studies of catecholamines in the rat brain-I.'' *Journal of Neurochemistry*. 13: 655–669. (1966).

(7) Ison, J.R. ''Reflex modification as an objective test for sensory processing following toxicant exposure.'' *Neurobehavioral Toxicology and Teratology*. 6: 437–445. (1984).

(8) Jensen, D.R. ''Some simultaneous multivariate procedures using Hotelling's T2 Statistics.'' *Biometrics*. 28: 39–53. (1972).

(9) McAllister, W.R. and McAllister, D.E. ''Behavioral measurement of conditioned fear.'' In: ''Adverse Conditioning and Learning.'' Brush, F.R., ed., New York: Academic Press (1971).

(10) Neter, J. and Wasserman, W. ''Applied Linear Statistical Models.'' Homewood: Richard D. Irwin, Inc. (1974).

(11) Sokal, R.P. and Rohlf, E.J. ''Biometry.'' San Francisco: W.H. Freeman and Co. (1969).

(12) Spencer, P.S., Bischoff, M.C., and Schaumburg, H.H., ''Neuropathological methods for the detection of neurotoxic disease.'' In: ''Experimental and Clinical Neurotoxicology.'' Spencer, P.S. and Schaumburg, H.H., eds., Baltimore, MD: Williams & Wilkins, pp. 743–757. (1980).

[53 FR 5957, Feb. 26, 1988]

PART 796—CHEMICAL FATE TESTING GUIDELINES

Subpart A [Reserved]

Subpart B—Physical and Chemical Properties

Sec.
796.1050 Absorption in aqueous solution: Ultraviolet/visible spectra.
796.1950 Vapor pressure.

Subpart C—Transport Processes

796.2750 Sediment and soil adsorption isotherm.

Subpart D—Transformation Processes

796.3100 Aerobic aquatic biodegradation.
796.3500 Hydrolysis as a function of pH at 25 °C.

AUTHORITY: 15 U.S.C. 2603.

Subpart A [Reserved]

Subpart B—Physical and Chemical Properties

§ 796.1050 Absorption in aqueous solution: Ultraviolet/visible spectra.

(a) *Introductory information*—(1) *Guidance information*. (i) Molecular formula.

(ii) Structural formula.

(2) *Standard documents*. The spectrophotometric method is based on national standards and consensus methods which are applied to measure the absorption spectra.

(b) *Method*—(1)(i) *Introduction, purpose, scope, relevance, application and limits of test*. (A) The primary environmental purpose in determining the ultraviolet-visible (UV-VIS) absorption spectrum of a chemical compound is to have some indication of the wavelengths at which the compounds may be susceptible to photochemical degradation. Since photochemical degradation is likely to occur in both the atmosphere and the aquatic environment, spectra appropriate to these media will be informative concerning the need for further persistence testing.

(B) Degradation will depend upon the total energy absorbed in specific wavelength regions. Such energy absorption is characterized by both molar absorption coefficient (molar extinction coefficient) and band width. However, the absence of measurable absorption does not preclude the possibility of photodegradation.

(ii) *Definitions and units*. The *UV-VIS absorption spectrum* of a solution is a function of the concentration, c_1, expressed in mol/L, of all absorbing species present; the path length, d, of the spectrophotometer cell, expressed in cm; and the molar absorption (extinction) coefficient, ε_i, of each species. The

absorbance (optical density) A of the solution is then given by:

$$A = d\sum_{i} \varepsilon_{ici}$$

For a resolvable absorbance peak, the band width λ is the wavelength range, expressed in nm=10^{-9} m, of the peak at half the absorbance maximum.

(iii) *Reference substances.* (A) The reference substances need not be employed in all cases when investigating a new substance. They are provided primarily so that calibration of the method may be performed from time to time and to offer the chance to compare the results when another method is applied.

(B) Reference compounds appropriate for the calibration of the system are:

(*1*) Potassium dichromate (in 0.005 mol/L, H_2SO_4 solution) from J.A.A. Ketelaar, paragraph (d)(2) of this section:

log ε	3.56	3.63	3.16	3.50	
λ in nm	235	257	313	350	

(*2*) Fluoranthene (in methanol) from *C.R.C. Atlas of Spectral Data,* paragraph (d)(3) of this section:

log ε	4.75	4.18	4.73	3.91	3.92
λ in nm	237	236	288	339	357

(*3*) 4-nitrophenol (in methanol) from *C.R.C. Atlas of Spectral Data,* paragraph (d)(3) of this section:

log ε	3.88	4.04
λ in nm	288	311

See also paragraph (d)(1) of this section.

(iv) *Principle of the test method.* This method utilizes a double-beam spectrophotometer which records only the absorption differences between the blank and test solutions to give the spectrum of the chemical being tested.

(v) *Quality criteria—Reproducibility and sensitivity.* (A) Reproducibility and sensitivity, need not be measured directly. Instead, the accuracy of the system in measuring the spectra of reference compounds will be defined so as to assure appropriate reproducibility and sensitivity. It is preferable to use a recording double-beam spectrophotometer to obtain the UV-VIS spectrum of the test compound. Such an instrument should have a photometric accuracy of ±0.02 units over the absorbance range of 0 to 2 units. It should be capable of recording absorbances at wavelengths of 200 to 750 nanometers nm with a wavelength accuracy of ±0.5 nm. The cells employed with the instrument must necessarily be transparent over this wavelength range and must have a path length determined to within 1 percent. To ensure that the instrument is performing satisfactorily, spectra for test solutions of $K_2Cr_2O_7$ (for absorbance accuracy) and holmium glass (for wavelength accuracy) should be run periodically.

(B) In the event that a recording double-beam instrument is not available, it will be necessary to determine the absorbance of the test solution in a single-beam instrument at 5-nm intervals over the entire wavelength range and at 1-nm intervals where there are indicated absorbance maxima. Wavelength and absorbance tests should be done as with the double-beam instrument.

(2) *Description of the test procedure*—(i) *Preparation*—(A) *Preparation of test solutions.* (*1*) Solutions should be prepared by accurately weighing an appropriate amount of the purest form of the test substance available. This should be made up in a concentration which will result in at least one absorbance maximum in the range 0.5 to 1.5 units.

(*2*) The absorption of a compound is due to its particular chemical form. It is often the case that different forms are present, depending on whether the medium is acidic, basic, or neutral. Consequently, spectra under all three conditions are required where solubility and concentration allow. Where it is not possible to obtain sufficient concentrations in any of the aqueous media, a suitable organic solvent should be used (methanol preferred).

(*3*) The acid medium should have a pH of less than 2, and the basic medium should be at least pH 10. The solvent for the neutral solution, and for preparing the acidic and basic ones, should be distilled water, transparent to ultraviolet radiation down to 200 nm. If methanol must be used, acidic and basic solutions can be prepared by adding 10 percent by volume of HCl or NaOH in aqueous solution ([HCl], [NaOH]=1 mol/L).

(*4*) In theory, all chemical species other than that being tested are

present in both beams and would therefore not appear in the recorded spectrum of a double-beam instrument. In practice, because the solvent is usually present in great excess, there is a threshold value of wavelength below which it is not possible to record the spectrum of the test chemical. Such a wavelength will be a property of the solvent or of the test medium. In general, distilled water is useful from 200 nm (dissolved ions will often increase this), methanol from 210 nm, hexane from 210 nm, acetonitrile from 215 nm and dichloromethane from 235 nm.

(B) *Blank solutions.* A blank must be prepared which contains the solvent and all chemical species other than the test chemical. The absorption spectrum of this solution should be recorded in a manner identical to that of the test solution and preferably on the same chart. This ''baseline'' spectrum should never record an absorbance reading varying more than ±0.05 from the nominal zero value.

(C) *Cells.* Cell pathlengths are usually between 0.1 cm and 10 cm. Cell lengths should be selected to permit recording of at least one maximum in the absorbance range of 0.5 to 1.5 units. Which set of cells should be used will be governed by the concentration and the absorbance of the test solution as indicated by the Beer-Lambert Law. The cells should be transparent over the range of the spectrum being recorded, and the path-lengths should be known to an accuracy of at least 1 per cent. Cells should be thoroughly cleaned in an appropriate manner (chromic acid is useful for quartz cells) and rinsed several times with the test or blank solutions.

(ii) *Performance of the test.* Both cells to be employed should be rinsed with the blank solution and then filled with same. The instrument should be set to scan at a rate appropriate for the required wavelength resolution and the spectrum of the blank recorded. The sample cell should then be rinsed and filled with the test solution and the scanning repeated, preferably on the same spectrum chart, to display the baseline. The test should be carried out at 25 °C.

(c) *Data and reporting*—(1) *Treatment of results.* (i) The molar absorption coefficient ε should be calculated for all absorbance maxima of the test substance. The formula for this calculation is:

$$\varepsilon = \frac{A}{c_{,i} \times d},$$

where the quantities are as defined above (see Definitions and units).

(ii) For each peak which is capable of being resolved, either as recorded or by extrapolated symmetrical peaks, the bandwidth should be recorded.

(2) *Test report.* (i) The report should contain a copy of each of the three spectra (3 pH conditions). If neither water nor methanol solutions are feasible, there will be only one spectrum. Spectra should include a readable wave-length scale. Each spectrum should be clearly marked with the test conditions.

(ii) For each maximum in each spectrum, the ε value and bandwidth (when applicable) should be calculated and reported, along with the wavelength of the maximum. This should be presented in tabular form.

(iii) The various test conditions should be included, such as scan speed, the name and model of the spectrophotom-eter, the slit width (where available), cell type and path length, the concentrations of the test substance, and the nature and acidity of the solvent medium. A recent test spectrum on appropriate reference materials for photometric and wavelength accuracy should also be submitted (see Reproducibility and sensitivity).

(d) *Literature references.* For additional background information on this test guideline, the following references should be consulted:

(1) Milazzo, G., Caroli, S., Palumbo-Doretti, M., Violante, N., *Analytical Chemistry,* 49: 711 (1977).

(2) Katelaar, J.A.A., *Photoelectric Spectrometry Group Bulletin,* 8, (Cambridge, 1955).

(3) Chemical Rubber Company, *Atlas of Spectral Data,* (Cliffland, Ohio).

[50 FR 39472, Sept. 27, 1985]

§ 796.1950 Vapor pressure.

(a) *Introduction*—(1) *Background and purpose.* (i) Volatilization, the evaporative loss of a chemical, depends upon

the vapor pressure of chemical and on environmental conditions which influence diffusion from a surface. Volatilization is an important source of material for airborne transport and may lead to the distribution of a chemical over wide areas and into bodies of water far from the site of release. Vapor pressure values provide indications of the tendency of pure substances to vaporize in an unperturbed situation, and thus provide a method for ranking the relative volatilities of chemicals. Vapor pressure data combined with water solubility data permit the calculation of Henry's law constant, a parameter essential to the calculation of volatility from water.

(ii) Chemicals with relatively low vapor pressures, high adsorptivity onto solids, or high solubility in water are less likely to vaporize and become airborne than chemicals with high vapor pressures or with low water solubility or low adsorptivity to solids and sediments. In addition, chemicals that are likely to be gases at ambient temperatures and which have low water solubility and low adsorptive tendencies are less likely to transport and persist in soils and water. Such chemicals are less likely to biodegrade or hydrolyze and are prime candidates for atmospheric oxidation and photolysis (e.g., smog formation or stratospheric alterations). On the other hand, nonvolatile chemicals are less frequently involved in atmosphere transport, so that concerns regarding them should focus on soils and water.

(iii) Vapor pressure data are an important consideration in the design of other chemical fate and effects tests; for example, in preventing or accounting for the loss of violatile chemicals during the course of the test.

(2) *Definitions and units.* (i) ''Desorption efficiency'' of a particular compound applied to a sorbent and subsequently extracted with a solvent is the weight of the compound which can be recovered from the sorbent divided by the weight of the compound originally sorbed.

(ii) ''Pascal'' (Pa) is the standard international unit of vapor pressure and is defined as newtons per square meter (N/m^2). A newton is the force necessary to give acceleration of one meter per second squared to one kilogram of mass.

(iii) The ''torr'' is a unit of pressure which equals 133.3 pascals or 1 mm Hg at 0 °C.

(iv) ''Vapor pressure'' is the pressure at which a liquid or solid is in equilibrium with its vapor at a given temperature.

(v) ''Volatilization'' is the loss of a substance to the air from a surface or from solution by evaporation.

(3) *Principle of the test methods.* (i) The isoteniscope procedure uses a standardized technique [ASTM 1978] that was developed to measure the vapor pressure of certain liquid hydrocarbons. The sample is purified within the equipment by removing dissolved and entrained gases until the measured vapor pressure is constant, a process called ''degassing.'' Impurities more volatile than the sample will tend to increase the observed vapor pressure and thus must be minimized or removed. Results are subject to only slight error for samples containing nonvolatile impurities.

(ii) Gas saturation (or transpiration) procedures use a current of inert gas passed through or over the test material slowly enough to ensure saturation and subsequent analysis of either the loss of material or the amount (and sometimes kind) of vapor generated. Gas saturation procedures have been described by Spencer and Cliath (1969) under paragraph (d)(2) of this section. Results are easy to obtain and can be quite precise. The same procedures also can be used to study volatilization from laboratory scale environmental simulations. Vapor pressure is computed on the assumption that the total pressure of a mixture of gases is equal to the sum of the pressures of the separate or component gases and that the ideal gas law is obeyed. The partial pressure of the vapor under study can be calculated from the total gas volume and the weight of the material vaporized. If v is the volume which contains w grams of the vaporized material having a molecular weight M, and if p is the pressure of the vapor in equilibrium at temperature T (K), then the vapor pressure, p, of the sample is calculated by

$$p=(w/M)(RT/v),$$

where R is the gas constant (8.31 Pa m^2 mol^{-1} K^{-1}) when the pressure is in pascals (Pa) and the volume is in cubic meters. As noted by Spencer and Cliath (1970) under paragraph (d)(3) of this section, direct vapor pressure measurements by gas saturation techniques are more directly related to the volatilization of chemicals than are other techniques.

(iii) In an effort to improve upon the procedure described by Spencer and Cliath (1969) under paragraph (d)(2) of this section, and to determine the applicability of the gas saturation method to a wide variety of chemical types and structures, EPA has sponsored research and development work at SRI International (EPA 1982) under paragraph (d)(1) of this section. The procedures described in this Test Guideline are those developed under that contract and have been evaluated with a wide variety of chemicals of differing structure and vapor pressures.

(4) *Applicability and specificity*. (i) A procedure for measuring the vapor pressure of materials released to the environment ideally would cover a wide range of vapor pressure values, at ambient temperatures. No single procedure can cover this range, so two different procedures are described in this section, each suited for a different part of the range. The isoteniscope procedure is for pure liquids with vapor pressures from 0.1 to 100 kPa. For vapor pressures of 10^{-5} to 10^{3} Pa, a gas saturation procedure is to be used.

(ii) With respect to the isoteniscope method, if compounds that boil close to or form azeotropes with the test material are present, it is necessary to remove the interfering compounds and use pure test material. Impurities more volatile than the sample will tend to increase the observed vapor pressure above its true value but the purification steps will tend to remove these impurities. Soluble, nonvolatile impurities will decrease the apparent vapor pressure. However, because the isoteniscope procedure is a static, fixed-volume method in which an insignificant fraction of the liquid sample is vaporized, it is subject to only slight error for samples containing nonvolatile impurities. That is, the nonvolatile impurities will not be concentrated due to vaporization of the sample.

(iii) The gas saturation method is applicable to solid or liquid chemicals. Since the vapor pressure measurements are made at ambient temperatures, the need to extrapolate data from high temperatures is not necessary and high temperature extrapolation, which can often cause serious errors, is avoided. The method is most reliable for vapor pressures below 10^{3} Pa. Above this limit, the vapor pressures are generally overestimated, probably due to aerosol formation. Finally, the gas saturation method is applicable to the determination of the vapor pressure of impure materials.

(b) *Test procedures*—(1) *Test conditions.* (i) The apparatus in the isoteniscope method is described in paragraph (b)(2)(i) of this section.

(ii) The apparatus used in the gas saturation method is described in paragraph (b)(2)(ii) of this section.

(2) *Performance of the tests*—(i) *Isoteniscope Procedure.* The isoteniscope procedure described as ANSI/ASTM Method D 2879–86 is applicable for the measurement of vapor pressures of liquids with vapor pressures of 0.1 to 100 kilopascals (kPa) (0.75 to 750 torr). ASTM D 2879–86 is available for inspection at the National Archives and Records Administration (NARA). For information on the availability of this material at NARA, call 202–741–6030, or go to: *http://www.archives.gov/federal_register/code_of_federal_regulations/ibr_locations.html.* This incorporation by reference was approved by the Director of the Office of the Federal Register. This material is incorporated as it exists on the date of approval and a notice of any change in this material will be published in the FEDERAL REGISTER. Copies of the incorporated material may be obtained from the Non-Confidential Information Center (NCIC) (7407), Office of Pollution Prevention and Toxics, U.S. Environmental Protection Agency, Room B–607 NEM, 401 M St., SW., Washington, DC 20460, between the hours of 12 p.m. and 4 p.m. weekdays excluding legal holidays, or from the American Society for Testing and Materials (ASTM), 1916 Race Street, Philadelphia, PA 19103.

The isoteniscope method involves placing liquid sample in a thermostated bulb (the isoteniscope) connected to a manometer and a vacuum pump. Dissolved and entrained gases are removed from the sample in the isoteniscope by degassing the sample at reduced presssure. The vapor pressure of the sample at selected temperatures is determined by balancing the pressure due to the vapor of the sample against a known pressure of an inert gas. The vapor pressure of the test compound is determined in triplicate at 25 ±0.5 °C and at any other suitable temperatures (±0.5°). It is important that additional vapor pressure measurements be made at other temperatures, as necessary, to assure that there is no need for further degassing, as described in the ASTM method.

(ii) *Gas saturation procedure.* (A) The test procedures require the use of a constant-temperature box as depicted in the following Figure 1.

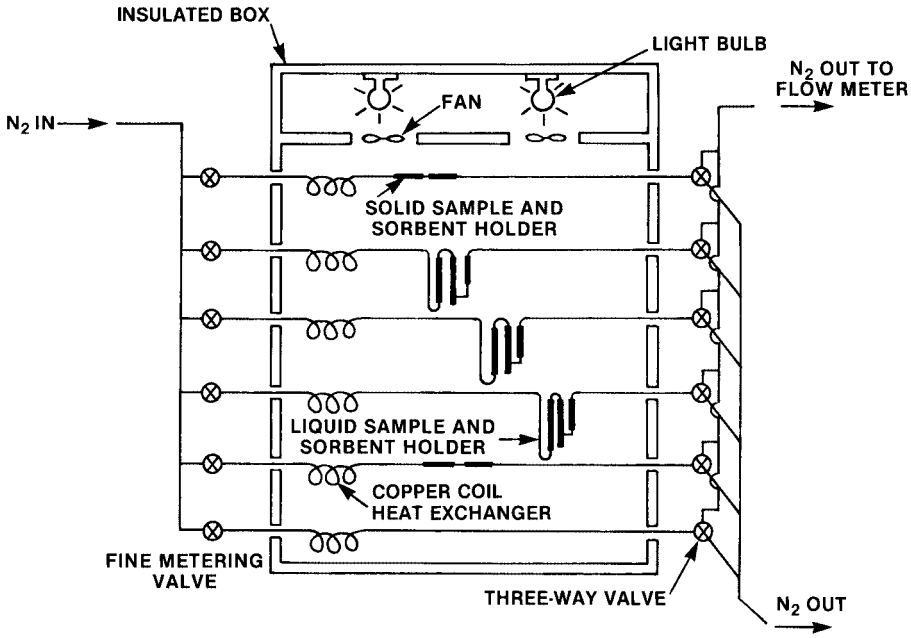

FIGURE 1—SCHEMATIC DIAGRAM OF VAPOR SATURATION APPARATUS

The insulated box, containing sample holders, may be of any suitable size and shape. The sketch in Figure 1 shows a box containing three solid sample holders and three liquid sample holders, which allows for the triplicate analysis of either a solid or liquid sample. The temperature within the box is controlled to ±0.5° or better. Nitrogen gas, split into six streams and controlled by fine needle valves (approximately 0.79 mm orifice), flows into the box via 3.8 mm (0.125 in.) i.d. copper tubing. After temperature equilibration, the gas flows through the sample and the sorbent trap and exits from the box. The flow rate of the effluent carrier gas is measured at room temperature with a bubble flow meter or other suitable device. The flow rate is checked frequently during the experiment to assure that there is an accurate value for the total volume of carrier gas. The flow rate is used to calculate the total volume (at room temperature) of gas that has passed

through the sample and sorbent [(vol/time) × time = volume]. The vapor pressure of the test substance can be calculated from the total gas volume and the mass of sample vaporized. If v is the volume of gas that transported mass w of the vaporized test material having a molecular weight M, and if p is the equilibrium vapor pressure of the sample at temperature T, then p is calculated by the equation

$$p=(w/M)(RT/v).$$

In this equation, R is the gas constant (8.31 Pa $m^3 mol^{-1} K^{-1}$). The pressure is expressed in pascals (Pa), the volume in cubic meters (m^3), mass in grams and T in kelvins (K). T=273.15+t, if t is measured in degrees Celsius (°C).

(B) Solid samples are loaded into 5 mm i.d. glass tubing between glass wool plugs. The following Figure 2 depicts a drawing of a sample holder and absorber system.

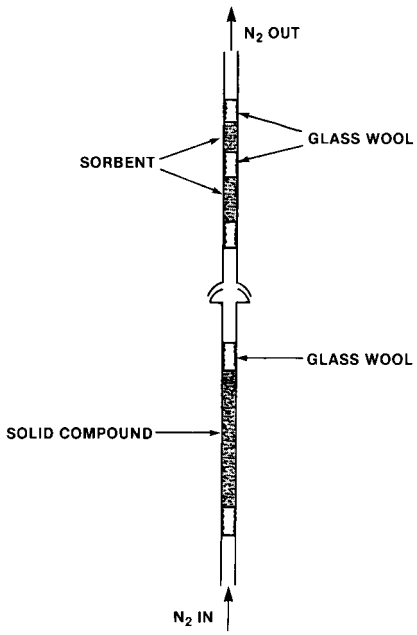

FIGURE 2—SOLID COMPOUND SAMPLING SYSTEM

(C) Liquid samples are contained in a holder as shown in the following Figure 3.

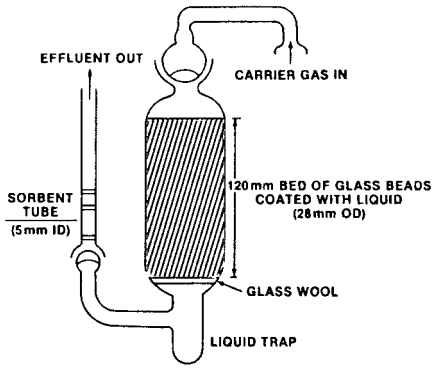

FIGURE 3—LIQUID COMPOUND SAMPLING SYSTEM

The most reproducible method for measuring the vapor pressure of liquids is to coat the liquid on glass beads and to pack the holder in the designated place with these beads.

(D) At very low vapor pressures and sorbent loadings, adsorption of the chemical on the glass wool separating the sample and the sorbent and on the glass surfaces may be a serious problem. Therefore, very low loadings should be avoided whenever possible. Incoming nitrogen gas (containing no interfering impurities) passes through a coarse frit and bubbles through a 38 cm column of liquid sample. The stream passes through a glass wool column to trap aerosols and then through a sorbent tube, as described above. The pressure drop across the glass wool column and the sorbent tube are negligible.

(E) With both solid and liquid samples, at the end of the sampling time, the front and backup sorbent sections are analyzed separately. The compound on each section is desorbed by adding the sorbent from that section to 1.0 ml of desorption solvent in a small vial and allowing the mixture to stand at a suitable temperature until no more test compound desorbs. It is extremely important that the desorption solvent contain no impurities which would interfere with the analytical method of choice. The resulting solutions are analyzed quantitatively by a suitable analytical method to determine the weight of sample desorbed from each section. The choice of the analytical method,

sorbent, and desorption solvent is dictated by the nature of the test material. Commonly used sorbents include charcoal, Tenax GC, and XAD–2. Describe in detail the sorbent, desorption solvent, and analytical methods employed.

(F) Measure the desorption efficiency for every combination of sample, sorbent, and solvent used. The desorption efficiency is determined by injecting a known mass of sample onto a sorbent and later desorbing it and analyzing for the mass recovered. For each combination of sample, sorbent, and solvent used, carry out the determination in triplicate at each of three concentrations. Desorption efficiency may vary with the concentration of the actual sample and it is important to measure the efficiency at or near the concentration of sample under gas saturation test procedure conditions.

(G) To assure that the gas is indeed saturated with test compound vapor, sample each compound at three differing gas flow rates. Appropriate flow rates will depend on the test compound and test temperature. If the calculated vapor pressure shows no dependence on flow rate, then the gas is assumed to be saturated.

(c) *Data and reporting.* (1) Report the triplicate calculated vapor pressures for the test material at each temperature, the average calculated vapor pressure at each temperature, and the standard deviation.

(2) Provide a description of analytical methods used to analyze for the test material and all analytical results.

(3) For the isoteniscope procedure, include the plot of p vs. the reciprocal of the temperature in K, developed during the degasing step and showing linearity in the region of 298.15 K (25 °C) and any other required test temperatures.

(4) For the gas saturation procedure, include the data on the calculation of vapor pressure at three or more gas flow rates at each test temperature, showing no dependence on flow rate. Include a description of sorbents and solvents employed and the desorption efficiency calculations.

(5) Provide a description of any difficulties experienced or any other pertinent information.

(d) *References.* For additional background information on this test guideline the following references should be consulted:

(1) U.S. Environmental Protection Agency. *Evaluation of Gas Saturation Methods to Measure Vapor Pressures: Final Report,* EPA Contract No. 68–01–5117 with SRI International, Menlo Park, California (1982).

(2) Spencer, W.F. and Cliath, M.M. ''Vapor Density of Dieldrin,'' *Journal of Agricultural and Food Chemistry,* 3:664–670 (1969).

(3) Spencer, W.F. and Cliath, M.M. ''Vapor Density and Apparent Vapor Pressure of Lindane,'' *Journal of Agricultural and Food Chemistry,* 18:529–530 (1970).

[50 FR 39252, Sept. 27, 1985, as amended at 53 FR 12525, Apr. 15, 1988; 53 FR 21641, June 9, 1988; 60 FR 34466, July 3, 1995; 69 FR 18803, Apr. 9, 2004]

Subpart C—Transport Processes

§ 796.2750 Sediment and soil adsorption isotherm.

(a) *Introduction*—(1) *Background and purpose.* The adsorption of chemicals to sediments and soils is an important process that affects a chemical's distribution in the environment. If a chemical is adsorbed to soil particles, it will remain on the soil surface and will not reach ground water. If a chemical is not adsorbed, it will leach through the soil profile and may reach ground waters and then surface waters. Similarly, if a chemical adsorbed to sediment, it will accumulate in the bed and suspended load of aquatic systems. If a chemical is not adsorbed to sediment, it will accumulate in the water column of aquatic systems. Information on the adsorption potential is needed under certain circumstances to assess the transport of chemicals in the environment. This section describes procedures that will enable sponsors to determine the adsorption isotherm of a chemical on sediments and soils.

(2) *Definitions and units.* (i) The ''cation exchange capacity'' (CEC) is the sum total of exchangeable cations that a sediment or soil can adsorb. The CEC is expressed in milliequivalents of negative charge per 100 grams (meq/100g) or milliequivalents of negative

charge per gram (meq/g) of soil or sediment.

(ii) ''Clay mineral analysis'' is the estimation or determination of the kinds of clay-size minerals and the amount present in a sediment or soil.

(iii) ''Organic matter'' is the organic fraction of the sediment or soil; it includes plant and animal residues at various stages of decomposition, cells and tissues of soil organisms, and substances synthesized by the microbial population.

(iv) ''Particle size analysis'' is the determination of the various amounts of the different particle sizes in a sample (i.e., sand, silt, clay), usually by sedimentation, sieving, micrometry, or combinations of these methods. The names and diameter range commonly used in the United States are:

Name	Diameter range
Very coarse sand	2.0 to 1.0 mm
Coarse sand	1.0 to 0.5 mm
Medium sand	0.5 to 0.25 mm
Fine sand	0.25 to 0.125 mm
Very fine sand	0.125 to 0.062 mm
Silt	0.062 to 0.002 mm
Clay	<0.002 mm

(v) The ''pH'' of a sediment or soil is the negative logarithm to the base ten of the hydrogen ion activity of the sediment or soil suspension. It is usually measured by a suitable sensing electrode coupled with a suitable reference electrode at a 1/1 solid/solution ratio by weight.

(vi) The adsorption ratio, ''K_d,'' is the amount of test chemical adsorbed by a sediment or soil (i.e., the solid phase) divided by the amount of test chemical in the solution phase, which is in equilibrium with the solid phase, at a fixed solid/solution ratio.

(vii) ''Sediment'' is the unconsolidated inorganic and organic material that is suspended in and being transported by surface water, or has settled out and has deposited into beds.

(viii) ''Soil'' is the unconsolidated mineral material on the immediate surface of the earth that serves as a natural medium for the growth of land plants. Its formation and properties are determined by various factors such as parent material, climate, macro- and microorganisms, topography, and time.

(ix) ''Soil aggregate'' is the combination or arrangement of soil separates (sand, silt, clay) into secondary units. These units may be arranged in the soil profile in a distinctive characteristic pattern that can be classified according to size, shape, and degree of distinctness into classes, types, and grades.

(x) ''Soil classification'' is the systematic arrangement of soils into groups or categories. Broad groupings are based on general soil characteristics while subdivisions are based on more detailed differences in specific properties. The soil classification system used in this standard and the one used today in the United States is the 7th Approximation-Comprehensive System. The ranking of subdivisions under this system is: Order, Suborder, Great group, family, and series.

(xi) A ''soil horizon'' is a layer of soil approximately parallel to the land surface. Adjacent layers differ in physical, chemical, and biological properties such as color, structure, texture, consistency, kinds and numbers of organisms present, and degree of acidity or alkalinity.

(xii) ''Soil Order'' is the broadest category of soil classification and is based on the general similarities of soil physical/chemical properties. The formation of soil by similar general genetic processes causes these similarities. The Soil Orders found in the United States are: Alfisol, Aridisol, Entisol, Histosol, Inceptisol, Mollisol, Oxisol, Spodosol, Ultisol, and Vertisol.

(xiii) ''Soil series'' is the basic unit of soil classification and is a subdivision of a family. A series consists of soils that were developed under comparable climatic and vegetational conditions. The soils comprising a series are essentially alike in all major profile characteristics except for the texture of the ''A'' horizon (i.e., the surface layer of soil).

(xiv) ''Soil texture'' is a classification of soils that is based on the relative proportions of the various soil separates present. The soil textural classes are: clay, sandy clay, silty clay, clay loam, silty clay loam, sandy clay loam, loam, silt loam, silt, sandy loam, loamy sand, and sand.

(3) *Principle of the test method.* (i) The extent of adsorption of a chemical onto sediment or soil is measured, using this

test guideline, by equilibrating aqueous solutions containing different, but environmentally realistic, concentrations of the test chemical with a known quantity of sediment or soil. After equilibrium is reached, the distribution of the chemical between the water phase and the solid phase is quantitatively measured by a suitable analytical method. Then, sorption constants are calculated by using the Freundlich equation:

Equation 1

$$x/m = C_s = KC_e^{l/n}$$

where:

C_e=Equilibrium concentration of the chemical in the solution phase
C_s=Equilibrium concentration of the chemical in the solid phase
K=Freundlich adsorption coefficient
m=The mass of the solid in grams
$^{l/n}$=Exponent where n is a constant
x=The mass in micrograms of the chemical adsorbed by m grams of solid.

Logarithmetic transformation of the Freundlich equation yields the following linear relationship:

Equation 2

$$\log C_s = \log K + (l/n) \log C_e$$

(ii) In order to estimate the environmental movement of the test chemical, the values K and l/n are compared with the values of other chemicals whose behavior in soil and sediment systems is well-documented in scientific literature.

(iii) The adsorption isotherm (AI) test has many desirable features. First, adsorption results are highly reproducible. The test provides excellent quantitative data readily amenable to statistical analyses. Also, it has relatively modest requirements for chemicals, soils, laboratory space, and equipment. It allows solution phase organic chemical determinations that are relatively uncomplicated. A chemical extraction-mass balance procedure to elicit information on chemical transformations occurring at colloid interfaces can be incorporated into this test. The ease of performing the isotherm test and mass balance will depend upon the physical/chemical properties of the test chemical and the availability of suitable analytical techniques to measure the chemical.

(iv) The papers by Aharonson and Kafkafi (1975) under paragraph (d)(1) of this section, Harvey (1974) under paragraph (d)(3) of this section, Murray (1975) under paragraph (d)(4) of this section, Saltzman (1972) under paragraph (d)(5) of this section, Weber (1971) under paragraph (d)(6) of this section, and Wu (1975) under paragraph (d)(7) of this section served as the basis for this section. The soil and colloid chemistry literature and the analytical chemistry literature substantiate the experimental conditions and procedures specified in this guideline as accepted, standard procedures.

(4) *Applicability and specificity*. The AI Test Guideline can be used to determine the soil and sediment adsorption potential of sparingly water soluble to infinitely soluble chemicals. In general, a chemical having a water solubility of less than 0.5 ppm need not be tested with soil as the solid phase, since the literature indicates that these chemicals are, in general, immobile in soils, see Goring and Hamaker (1972) under paragraph (d)(2) of this section. However, this does not preclude future soil adsorption/transformation testing of these chemicals if more refined data are needed for the assessment process.

(b) *Test procedures*—(1) *Test conditions*—(i) *Special laboratory equipment*. (A) Equilibrating solutions that contain, besides the test chemical, 0.01M calcium nitrate dissolved in sterilized, distilled-deionized H_2O adjusted to neutral pH 7 by boiling to remove CO_2.

(B) Containers shall be composed of material that (*1*) adsorb negligible amounts of test chemical, and (*2*) withstand high speed centrifugation. The volume of the container is not a major consideration; however, it is extremely important that the amount of soil or sediment and the solid/solution ratio used in the study result in minimal container headspace. It is also extremely important that the containers be sterilized before use.

(C) A 150 micron (100 mesh) stainless-steel or brass sieve.

(D) Drying oven, with circulating air, that can attain 100 °C.

(E) Vortex mixer or a comparable device.

(F) Rotary shaker or a comparable device.

(G) High speed temperature-controlled centrifuge capable of sedimenting particles greater than 0.5 micron from aqueous solution.

(ii) *Temperature.* The test procedure shall be performed at 23 ±5 °C.

(iii) *Replications.* Three replications of the experimental treatments shall be used.

(iv) *Soil pretreatment.* The following soil pretreatment steps shall be performed under the following conditions:

(A) Decrease the water content, air or oven-dry soils at or below 50 °C.

(B) Reduce aggregate size before and during sieving, crush and grind dried soil very gently.

(C) Eliminate microbial growth during the test period using a chemical or physical treatment that does not alter or minimally alters the soil surface properties.

(D) Sieve soils with a 100 mesh stainless-steel or brass sieve.

(E) Store all solutions and soils at temperatures between 0 and 5 °C.

(v) *Sediment pretreatment.* The following sediment pretreatment steps shall be performed under the following conditions:

(A) Decrease the H_2O content by air or oven-drying sediments at or below 50 °C. Sediments should not be dried completely and should remain moist at all times prior to testing and analysis.

(B) Eliminate microbial growth during the test period by using a chemical and/or physical treatment that does not alter or minimally alters the colloid surface's properties.

(C) Store at temperatures between 0 and 5°C.

(vi) *Solid/solution ratio.* The solid/solution ratio shall be equal to or greater than 1/10. If possible, the ratios should be equal to or greater than 1/5. The sediment or soil dry weight after drying for a 24-hour minimum at 90 °C is recommended for use as the weight of the solid for ratio and data calculations. If an insufficient amount of chemical remains in the water phase for quantification, the solid/solution ratio should be adjusted so that measurable amounts of the test chemical remain in solution.

(vii) *Equilibration time.* The equilibration time will depend upon the length of time needed for the parent chemical to attain an equilibrium distribution between the solid phase and the aqueous solution phase. The equilibration time shall be determined by the following procedure:

(A) Equilibrate one solution containing a known concentration of the test chemical with the sediment or soil in a solid/solution ratio equal to or greater than 1/10 and preferably equal to or greater than 1/5. It is important that the concentration of the test chemical in the equilibrating solution (*1*) does not exceed one-half of its solubility and (*2*) should be 10 ppm or less at the end of the equilibration period.

(B) Measure the concentration of the chemical in the solution phase at frequent intervals during the equilibration period.

(C) Determine the equilibration time by plotting the measured concentration versus time of sampling; the equilibration time is the minimum period of time needed to establish a rate of change of solution concentration of 5 percent or less per 24 hours.

(viii) *Centrifugation time.* Calculate the centrifugation time, t_c, necessary to remove particles from solution greater than approximately 0.5 µm (5×10^{-5} µm) equivalent diameter (which represents all particles except the fine clay fraction) using the following equation:

Equation 3

$$t_c(\text{min})=1.41\times10^9\ [\log(R_2/R_1)]/N^2$$

where:

t_c=centrifuge time in minutes

R_2=distance from centrifuge spindle to deposition surface of centrifuge

R_1=distance from spindle to surface of the sample

N=number of revolutions of the centrifuge per minute.

(ix) *Storage of solutions.* If the chemical analysis is delayed during the course of the experiment, store all solutions between 0 and 5 °C.

(x) *Solvents for extraction.* It is important that the solvent used to extract the chemical from the sediment or soil is reagent grade or better. Solvents

shall contain no impurities which could interfere with the determination of the test compound.

(2) *Test procedure*—(i) *Equilibration.* Add six solutions containing different concentrations of the test chemical to at least one gram of each solid. The initial concentration of the test chemical in these solutions will depend on the affinity the chemical has for the sediment or soil. Therefore, after equilibrium is attained, it is extremely important that the highest concentration of the test chemical in the equilibrating solution does not exceed 10 ppm, is at least one order of magnitude greater than the lowest concentration reported, and does not exceed one half of its solubility.

(A) Immediately after the solutions are added to the solids, tightly cap the containers and vigorously agitate them for several minutes with a vortex mixture or similar device.

(B) Shake the containers throughout the equilibration period at a rate that suspends all solids in the solution phase.

(ii) *Centrifugation.* When the equilibration time has expired, centrifuge the containers for t_c minutes.

(iii) *Chemical extraction.* (A) After centrifugation, remove the supernatant aqueous phase from the solid-solution mixture.

(B) Extract the chemical adsorbed on the sediment or soil colloid surfaces with solvent.

(iv) *Chemical analysis.* Determine the amount of parent test chemical in the aqueous equilibrating solution and organic solvent extractions. Use any method or combination of methods suitable for the identification and quantitative detection of the parent test chemical.

(c) *Reporting.* Report the following information:

(1) Temperature at which the test was conducted.

(2) Detailed description of the analytical technique(s) used in the chemical extraction, recovery, and quantitative analysis of the parent chemical.

(3) Amount of parent test chemical applied, the amount recovered, and the percent recovered.

(4) Extent of adsorption by containers and the approach used to correct the data for adsorption by containers.

(5) The individual observations, the mean values, and graphical plots of x/m as a function of C_e for each sediment or soil for (i) the equilibration time determination and (ii) the isotherm determination.

(6) The quantities K, n, and l/n.

(7) Soil information: Soil Order, series, texture, sampling location, horizon, general clay fraction mineralogy.

(8) Sediment information: sampling location, general clay fraction mineralogy.

(9) Sediment and soil physical-chemical properties: percent sand, silt, and clay (particle size analysis); percent organic matter; pH (1/1 solids/H_2O); and cation exchange capacity.

(10) The procedures used to determine the physical/chemical properties listed under paragraphs (c) (7) through (9) of this section.

(d) *References.* For additional background information on this test guideline the following references should be consulted:

(1) Aharonson, N., Kafkafi, U. ''Adsorption, mobility and persistence of thiabendazole and methyl 2-benzimidasole carbamate in soils,'' *Journal of Agricultural and Food Chemistry,* 23:720–724 (1975).

(2) Goring, C.A.I., Hamaker, J.W., (eds). *Organic Chemicals in the Soil Environment.* Vol. I & II (New York: Marcel Dekker, Inc., 1972).

(3) Harvey, R.G. et al. ''Soil adsorption and volatility of dinitroaniline herbicides,'' *Weed Science,* 22:120–124 (1974).

(4) Murray, D.S. et al. ''Comparative adsorption, desorption, and mobility of dipropetryn and prometryn in soil,'' *Journal of Agricultural and Food Chemistry,* 23:578–581 (1973).

(5) Saltzman, S.L. et al. ''Adsorption, desorption of parathion as affected by soil organic matter,'' *Journal of Agricultural and Food Chemistry,* 20:1224–1226 (1972).

(6) Weber, J.B. ''Model soil system, herbicide leaching, and sorption,'' *Weed Science,* 19:145–160 (1971).

(7) Wu, C.H., et al. ''Napropamide adsorption, desorption, and movement in soils,'' *Weed Science*, 23:454–457 (1975).

[50 FR 39252, Sept. 27, 1985, as amended at 52 FR 19058, May 20, 1987; 54 FR 29715, July 14, 1989]

Subpart D—Transformation Processes

§ 796.3100 Aerobic aquatic biodegradation.

(a) *Introduction*—(1) *Purpose.* (i) This Guideline is designed to develop data on the rate and extent of aerobic biodegradation that might occur when chemical substances are released to aquatic environments. A high biodegradability result in this test provides evidence that the test substance will be biodegradable in natural aerobic freshwater environments.

(ii) On the contrary, a low biodegradation result may have other causes than poor biodegradability of the test substance. Inhibition of the microbial inoculum by the test substance at the test concentration may be observed. In such cases, further work is needed to assess the aerobic aquatic biodegradability and to determine the concentrations at which toxic effects are evident. An estimate of the expected environmental concentration will help to put toxic effects into perspective.

(2) *Definitions.* (i) ''Adaptation'' is the process by which a substance induces the synthesis of any degradative enzymes necessary to catalyze the transformation of that substance.

(ii) ''Ultimate Biodegradability'' is the breakdown of an organic compound to CO_2, water, the oxides or mineral salts of other elements and/or to products associated with normal metabolic processes of microorganisms.

(iii) ''Ready Biodegradability'' is an expression used to describe those substances which, in certain biodegradation test procedures, produce positive results that are unequivocal and which lead to the reasonable assumption that the substance will undergo rapid and ultimate biodegradation in aerobic aquatic environments.

(3) *Principle of the test method.* This Guideline method is based on the method described by William Gledhill (1975) under paragraph (d)(1) of this section. The method consists of a 2-week inoculum buildup period during which soil and sewage microorganisms are provided the opportunity to adapt to the test compound. This inoculum is added to a specially equipped Erlenmeyer flask containing a defined medium with test substance. A reservoir holding barium hydroxide solution is suspended in the test flask. After inoculation, the test flasks are sparged with CO_2-free air, sealed, and incubated, with shaking in the dark. Periodically, samples of the test mixture containing water-soluble test substances are analyzed for dissolved organic carbon (DOC) and the $Ba(OH)_2$ from the reservoirs is titrated to measure the amount of CO_2 evolved. Differences in the extent of DOC disappearance and CO_2 evolution between control flasks containing no test substance, and flasks containing test substance are used to estimate the degree of ultimate biodegradation.

(4) *Prerequisites.* The total organic carbon (TOC) content of the test substance shall be calculated or, if this is not possible, analyzed, to enable the percent of theoretical yield of carbon dioxide and percent of DOC loss to be calculated.

(5) *Guideline information.* (i) Information on the relative proportions of the major components of the test substance will be useful in interpreting the results obtained, particularly in those cases where the result lies close to a ''pass level.''

(ii) Information on the toxicity of the chemical may be useful in the interpretation of low results and in the selection of appropriate test concentrations.

(6) *Reference substances.* Where investigating a chemical substance, reference compounds may be useful and an inventory of suitable reference compounds needs to be identified. In order to check the activity of the inoculum the use of a reference compound is desirable. Aniline, sodium citrate, dextrose, phthalic acid and trimellitic acid will exhibit ultimate biodegradation under the conditions of this Test Guideline method. These reference substances must yield 60 percent of theoretical maximum CO_2 and show a removal of 70 percent DOC within 28

days. Otherwise the test is regarded as invalid and shall be repeated using an inoculum from a different source.

(7) *Reproducibility*. The reproducibility of the method has not yet been determined; however it is believed to be appropriate for a screening test which has solely an acceptance but no rejective function.

(8) *Sensitivity*. The sensitivity of the method is determined by the ability to measure the endogenous CO_2 production of the inoculum in the blank flask and by the sensitivity limit of the dissolved organic carbon analysis. If the test is adapted to handle ^{14}C-labeled test substances, test substance concentrations can be much lower.

(9) *Possibility of standardization*. This possibility exists. The major difficulty is to standardize the inoculum in such a way that interlaboratory reproducibility is ensured.

(10) *Possibility of automation*. None at present, although parts of the analyses may be automated.

(b) *Test procedures*—(1) *Preparations*—(i) *Apparatus*. The shake flask apparatus under the following Figure 1 contains 10 mL of 0.2N $Ba(OH)_2$ in an open container suspended over 1 liter of culture medium in a 2-liter Erlenmeyer flask.

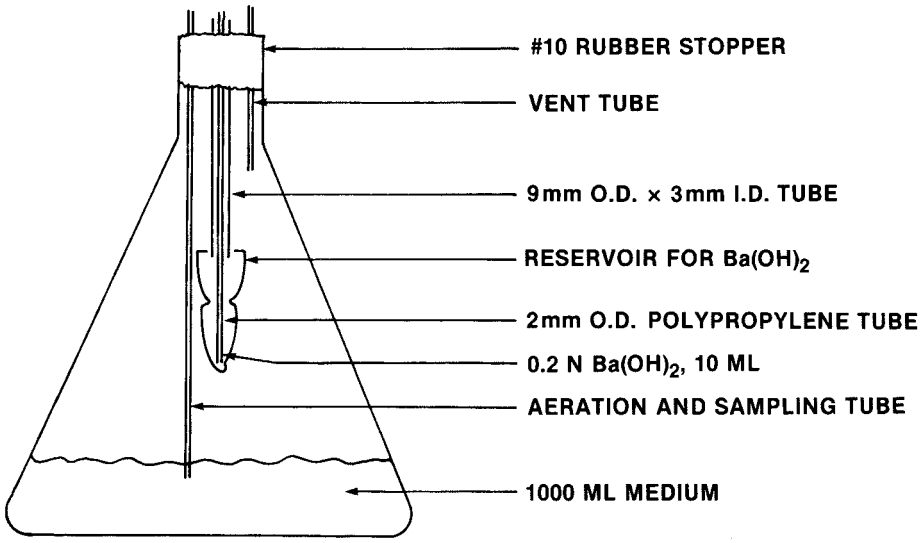

FIGURE 1—SHAKE-FLASK SYSTEM FOR CARBON DIOXIDE EVOLUTION

The $Ba(OH)_2$ container is made by placing a constriction just above the 10 mL mark of a 50 mL heavy-duty centrifuge tube and attaching the centrifuge tube to a 2 mm I.D.×9 mm O.D. glass tube by means of 3 glass support rods. The centrifuge tube opening is large enough to permit CO_2 to diffuse into the $Ba(OH)_2$, while the constriction permits transferal of the flask to and from the shaker without $Ba(OH)_2$ spillage into the medium. For periodic removal and addition of base from the center well, a polypropylene capillary tube, attached at one end to a 10 ml disposable syringe, is inserted through the 9 mm O.D. glass tube into the $Ba(OH)_2$ reservoir. The reservoir access port is easily sealed during incubation with a serum bottle stopper. Two glass tubes are added for sparging, venting, and medium sampling. The tops of these

tubes are connected with a short section of flexible tubing during incubation.

(ii) *Reagents and stock solutions.* (A) Stock solutions, I, II, and III under the following Table 1.

(B) Yeast extract.

(C) Vitamin-free casamino acids.

(D) 70 percent O_2 in nitrogen or CO_2-free air.

(E) 0.2N $Ba(OH)_2$.

(F) 0.1 N HCl.

(G) 20 percent H_2SO_4.

(H) Phenolphthalein.

(I) Dilution water—distilled, deionized water (DIW).

(iii) *Soil inoculum.* A fresh sample of an organically rich soil is used as the inoculum in the ultimate biodegradation test. Soil is collected, prepared, and stored according to the recommendations of Pramer and Bartha (1972) under paragraph (d)(2) of this section. The soil surface is cleared of litter and a soil sample is obtained 10 to 20 cm below the surface. The sample is screened through a sieve with 2 to 5 mm openings and stored in a polyethylene bag at 2 to 4 °C for not more than 30 days prior to use. The soil is never allowed to air-dry, and shall not be frozen during storage.

TABLE 1—MEDIUM EMPLOYED FOR ASSAY OF CO_2 EVOLUTION

Solution [1]	Compound	Stock Solution Conc. (g/L)
I	NH_4Cl	35
	KNO_3	15
	$K_2HPO_4 \cdot 3H_2O$	750
	$NaH_2PO_4 \cdot H_2O$	25
II [2]	KCl	10
	$MgSO_4$	20
	$FeSO_4 \cdot 7H_2O$	1
III	$CaCl_2$	5
	$ZnCl_2$	0.05
	$MnCl_2 \cdot 4H_2O$	0.5
	$CuCl_2$	0.05
	$CoCl_2$	0.001
	H_3BO_3	0.001
	MoO_3	0.0004

[1]= Each liter of test medium contains 1 mL of each solution.
[2]= Final pH is adjusted to 3.0 with 0.10 N HCl.

(iv) *Acclimation Medium.* Acclimation medium is prepared by adding, for each liter of distilled, deionized water (DIW): 1 mL each of solutions I, II, and III in Table 1 in paragraph (b)(1)(iii) of this section, 1.0 gm of soil inoculum (prepared according to paragraph (b)(1)(iii) of this section), 2.0 mL of aerated mixed liquor (obtained from an activated sludge treatment plant not more than 2 days prior to commencing the acclimation phase, and stored in the interim at 4 °C) and 50 mL raw domestic influent sewage. This medium is mixed for 15 minutes and filtered through a glass wool plug in a glass funnel. The filtrate is permitted to stand for 1 hour, refiltered through glass wool, and supplemented with 25 mg/L each of Difco vitamin-free casamino acids and yeast extract. Appropriate volumes are added to 2-liter Erlenmeyer flasks. Test compounds are added incrementally during the acclimation period at concentrations equivalent to 4, 8, and 8 mg/L carbon on days 0, 7, and 11, respectively. On day 14, the medium is refiltered through glass wool prior to use in the test. For evaluating the biodegradability of a series of functionally or structurally related chemicals, media from all inoculum flasks may be combined before final filtration.

(2) *Procedures.* (i) Inoculum (100 mL of acclimation medium) is added to 900 mL DIW containing 1 mL each of solutions I, II, and III in Table 1 under paragraph (b)(1)(iii) of this section in a 2-liter Erlenmeyer flask. Test compound equivalent to 10 mg/liter carbon is added to each of the replicate flasks containing the test medium. Ten mL of 0.2 N Ba $(OH)_2$ are added to the suspended reservoir in each flask and duplicate 10 mL samples of $Ba(OH)_2$ are also saved as titration blanks for analysis with test samples. Flasks are sparged with CO_2-free air (for volatile test materials, sparging is done prior to addition of the chemical), sealed, and placed on a gyrotary shaker (approximately 125 rpm) at 20 to 25 °C in the dark. For each set of experiments, each test, reference, inhibited, and control system should be analyzed at time zero and at a minimum of four other times from time zero through day 28. Sampling must be made with sufficient frequency to allow for a smooth plot of biodegradation with time. Sampling times should be varied by the investigator as deemed appropriate to match the rate of degradation of the test substance. Tests may be terminated when biodegradation reaches a plateau and is

consistent (±10 percent) over 3 consecutive days or on day 28, whichever occurs first. For chemicals which are water soluble at the test concentration, an adequate volume (5 to 10 mL) of medium is removed for DOC analysis. Each sample for DOC analysis should be filtered through a membrane filter of 0.45 micrometer pore diameter before DOC analysis. For all test and reference compounds, $Ba(OH)_2$ from the center well is removed for analysis. The center well is rinsed with 10 mL CO_2-free DIW and is refilled with fresh base. Rinse water is combined with the $Ba(OH)_2$ sample to be analyzed. Flasks are resealed and placed on the shaker. On the day prior to terminating the test, 3 mL of 20 percent H_2SO_4 are added to the medium to release carbonate bound CO_2.

(ii) For each set of experiments, each test substance shall be tested in triplicate.

(iii) For each set of experiments, one or two reference compounds are included to assess the microbial activity of the test medium. Duplicate reference flasks are prepared by adding reference compound equivalent to 10 mg/liter carbon to each of two flasks containing the test medium. Reference compounds which are positive for ultimate biodegradability include: sodium citrate, dextrose, phthalic acid, trimellitic acid, and aniline.

(iv) For each test set, triplicate controls receiving inoculated medium and no test compound, plus all test and reference flasks, are analyzed for CO_2 evolution and DOC removal. Results from analysis of the control flasks (DOC, CO_2 evolution, etc.) are subtracted from corresponding experimental flasks containing test compound in order to arrive at the net effect due to the test compound.

(v) A test system containing a growth inhibitor should be established as a control for each substance tested for biodegradation by this method. That inhibited system must contain the same amount of water, mineral nutrients, inoculum, and test substance used in the uninhibited test systems, plus 50 mg/L mercuric chloride ($HgCl_2$) to inhibit microbial activity.

(vi) Flasks shall be incubated in the dark to minimize both photochemical reactions and algal growth. Appropriate sterile controls or controls containing a metabolic inhibitor, such as 50 mg/1 $HgCl_2$, are needed to correct for interferences due to nonbiological degradation. With volatile organic materials, sparging with CO_2-free air is performed only once, just prior to addition of the test chemical. Analyses for CO_2 evolution and DOC removal are conducted within 2 to 3 hours of sampling to minimize interferences which may occur in storage. All glassware should be free of organic carbon contaminants.

(3) *Analytical measurements.* The quantity of CO_2 evolved is measured by titration of the entire $Ba(OH)_2$ sample (10 mL $Ba(OH)_2$+10 mL rinse water) with 0.1 N HCl to the phenolphthalein end point. $Ba(OH)_2$ blanks are also supplemented with 10 mL CO_2-free DIW and titrated in a similar manner. Samples (5 mL) for DOC are centrifuged and/or filtered and supernatant or filtrate analyzed by a suitable total organic carbon method.

(c) *Data and reporting*—(1) *Treatment of results.* (i) Test compound (10 mg carbon) is theoretically converted to 0.833 mmol CO_2. Absorbed CO_2 precipitates as $BaCO_3$ from $Ba(OH)_2$, causing a reduction in alkalinity by the equivalent of 16.67 mL of 0.1 N HCl for complete conversion of the test compound carbon to CO_2. Therefore, the percent theoretical CO_2 evolved from the test compound is calculated at any sampling time from the formula:

$$\text{Percent } CO_2 \text{ evolution} = [(TF - CF)/16.67]\ 100 \text{ (for 10 mg/L test compound carbon)}$$

where:

TF= mL 0.1 N HCl required to titrate $Ba(OH)_2$ samples from the test flask

CF= mL 0.1 N HCl required to titrate $Ba(OH)_2$ samples from the control flask.

(ii) The cumulative percent CO_2 evolution at any sample time is calculated as the summation of the percent CO_2 evolved at all sample points of the test.

(iii) The percent DOC disappearance from the test compound is calculated from the following equation:

$$\text{Percent DOC Removal} = [1 - (DTF_x - DCF_x)/(DTF_o - DCF_o)]\ 100$$

where:

DTF= Dissolved organic carbon from test flask
DCF= Dissolved organic carbon from control flask
o= Day zero measurements
x= Day of measurements during test.

(iv) The difference between the amount of 0.1 N HCl used for the $Ba(OH)_2$ titration blank samples and the $Ba(OH)_2$ samples from the control units (no test compound) is an indication of the activity of the microorganisms in the test system. In general, this difference is approximately 1 to 3 mL of 0.1 N HCl at each sampling time. A finding of no difference in the titration volumes between these two samples indicates a poor inoculum. In this case, the validity of the test results is questionable and the test set shall be rerun beginning with the acclimation phase.

(v) CO_2 evolution in the reference flasks is also indicative of the activity of the microbial test system. The suggested reference compounds should all yield final CO_2 evolution values of at least 60 percent of theoretical CO_2. If, for any test set, the percent theoretical CO_2 evolution value for the reference flasks is outside this range, the test results are considered invalid and the test is rerun.

(vi) Inhibition by the test compound is indicated by lower CO_2 evolution in the test flasks than in the control flasks. If inhibition is noted, the study for this compound is rerun beginning with the acclimation phase. During the test phase for inhibitory compounds, the test chemical is added incrementally according to the schedule: Day 0—0.5 mg/liter as organic carbon, Day 2—1 mg/liter C, Day 4—1.5 mg/liter C, Day 7—2 mg/liter C, Day 10—5 mg/liter C. For this case, the $Ba(OH)_2$ is sampled on Day 10, and weekly thereafter. The total test duration remains 28 days.

(vii) The use of ^{14}C-labeled chemicals is not required. If appropriately labeled test substance is readily available and if the investigator chooses to use this procedure with labeled test substance, this is an acceptable alternative. If this option is chosen, the investigator may use lower test substance concentrations if those concentrations are more representative of environmental levels.

(2) *Test report.* (i) For each test and reference compound, the following data shall be reported.

(ii) Information on the inoculum, including source, collection date, handling, storage and adaptation possibilities (i.e., that the inoculum might have been exposed to the test substance either before or after collection and prior to use in the test).

(iii) Results from each test, reference, inhibited (with $HgCl_2$) and control system at each sampling time, including an average result for the triplicate test substance systems and the standard deviation for that average.

(iv) Average cumulative percent theoretical CO_2 evolution over the test duration.

(v) Dissolved organic carbon due to test compound at each sampling time (DTF-DCF).

(vi) Average percent DOC removal at each sampling time.

(vii) Twenty-eight day standard deviation for percent CO_2 evolution and DOC removal.

(d) *References.* For additional background information on this test guideline the following references should be consulted:

(1) Gledhill, W.E. ''Screening Test for Assessment of Ultimate Biodegradability: Linear Alkyl Benzene Sulfonate,'' *Applied Microbiology,* 30:922–929 (1975).

(2) Pramer, D., Bartha, R. ''Preparation and Processing of Soil Samples for Biodegradation Testing,'' *Environmental Letters,* 2:217–224 (1972).

[50 FR 39252, Sept. 27, 1985, as amended at 52 FR 19058, May 20, 1987]

§ 796.3500 Hydrolysis as a function of pH at 25 °C.

(a) *Introduction*—(1) *Background and purpose.* (i) Water is one of the most widely distributed substances in the environment. It covers a large portion of the earth's surface as oceans, rivers, and lakes. The soil also contains water, as does the atmosphere in the form of water vapor. As a result of this ubiquitousness, chemicals introduced into the environment almost always come into contact with aqueous media. Certain classes of these chemicals, upon such contact, can undergo hydrolysis,

which is one of the most common reactions controlling chemical stability and is, therefore, one of the main chemical degradation paths of these substances in the environment.

(ii) Since hydrolysis can be such an important degradation path for certain classes of chemicals, it is necessary, in assessing the fate of these chemicals in the environment, to know whether, at what rate, and under what conditions a substance will hydrolyze. Some of these reactions can occur so rapidly that there may be greater concern about the products of the transformation than about the parent compounds. In other cases, a substance will be resistant to hydrolysis under typical environmental conditions, while, in still other instances, the substance may have an intermediate stability that can result in the necessity for an assessment of both the original compound and its transformation products. The importance of transformation of chemicals via hydrolysis in aqueous media in the environment can be determined quantitatively from data on hydrolysis rate constants. This hydrolysis Test Guideline represents a test to allow one to determine rates of hydrolysis at any pH of environmental concern at 25°C.

(2) *Definitions and units.* (i) ''Hydrolysis'' is defined as the reaction of an organic chemical with water, such that one or more bonds are broken and the reaction products of the transformation incorporate the elements of water (H_2O).

(ii) ''Elimination'' is defined in this Test Guideline to be a reaction of an organic chemical (RX) in water in which the X group is lost. These reactions generally follow the same type of rate laws that hydrolysis reactions follow and, thus, are also covered in this Test Guideline.

(iii) A ''first-order reaction'' is defined as a reaction in which the rate of disappearance of the chemical substance being tested is directly proportional to the concentration of the chemical substance and is not a function of the concentrations of any other substances present in the reaction mixture.

(iv) The ''half-life'' of a chemical is defined as the time required for the concentration of the chemical substance being tested to be reduced to one-half its initial value.

(v) ''Hydrolysis'' refers to a reaction of an organic chemical with water such that one or more bonds are broken and the reaction products incorporate the elements of water (H_2O). This type of transformation often results in the net exchange of a group X, on an organic chemical RX, for the OH group from water. This can be written as:

$$RX+HOH \rightarrow ROH+HX.$$

(A) Another result of hydrolysis can be the incorporation of both H and OH in a single product. An example of this is the hydrolysis of epoxides, which can be represented by

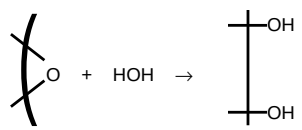

(B) The hydrolysis reaction can be catalyzed by acidic or basic species, including OH^- and $H_3O^=$ ($H^=$). The promotion of the reaction by H_3O^- or OH^- is called specific acid or specific base catalysis, respectively, as contrasted with general acid or base catalysis encountered with other cationic or anionic species. Usually, the rate law for chemical RX can be written as:

Equation 1

$$-d[RX]/_{d=} = k_h[RX]=k_A[H^=]\,[RX] + k_B[OH^-]\,[RX]+k'_N\,[H_2O]\,[RX],$$

where K_A, k_B and k'_N are the second-order rate constants for acid and base catalyzed and neutral water processes, respectively. In dilute solutions, such as are encountered in following this Test Guideline, water is present in great excess and its concentration is, thus, essentially constant during the course of the hydrolysis reaction. At fixed pH, the reaction, therefore, becomes pseudo first-order, and the rate constant (k_h) can be written as:

Equation 2

$$k_h=k_A\,[H^=]+k_B\,[OH^-]+k_N,$$

where k_N is the first-order neutral water rate constant. Since this is a

pseudo first-order process, the half-life is independent of the concentration and can be written as:

Equation 3

$t_{1/2}=0.693/k_h$.

At constant pH, Equation 1 can be integrated to yield the first order rate expression

Equation 4

$\log_{10}C=-(k_h\ t/_{2.303})+\log_{10}C_o$,

where C is the concentration of the test chemical at time t and C_o is the initial chemical concentration (t=0).

(C) At a given pH, Equation 2 under paragraph (a)(2)(v)(B) of this section contains three unknowns, k_A, k_B, and k_N. Therefore, three equations (i.e., measurements at three different pH's at a fixed temperature) are required if one wishes to solve for these quantities. Making suitable approximations for quantities that are negligible, the expressions for k_A, k_B, and k_N using values of k_h measured at pH 3, 7, and 11 are:

Equation 5

$k_A=10^3\ [k_h\ (3)-k_h\ (7)+10^{-4}\ k_h\ (11)]$

$k_B=10^3\ [k_h\ (11)-k_h\ (7)+10^{-4}\ k_h\ (3)]$

$k_N=k_h\ (7)-10^{-4}\ [k_h\ (3)+k_h\ (11)]$

The calculated rate constants from equation 5 under this paragraph can be employed in equation 2 under paragraph (a)(2)(v)(B) of this section to calculate the hydrolysis rate of a chemical at any pH of environmental concern.

(D) The equations under paragraph (a)(2) of this section apply whether the test chemical has one or more hydrolyzable groups. In the latter case, the rate may be written as:

Equation 6

$-d[RX]/_{dt}=[RX]=k_2\ [RX]+\ .\ .\ .\ .\ +k_n\ [RX]=(k_1+k_2+\ .\ .\ .\ .\ .\ k_n)\ [RX]=k_h\ [RX]$.

Equation 6 applies to the hydrolysis rate of a molecule having n hydrolyzable groups, each of which follows first-order reaction kinetics. The measured k_h is now the sum of the individual reaction rates and is the only rate constant required in this section.

(3) *Principle of the test method.* Procedures described in this section enable sponsors to obtain quantitative information on hydrolysis rates through a determination of hydrolysis rate constants and half-lives of chemicals at pH 3.00, 7.00, and 11.00 at 25 °C. The three measured rate constants are used to determine the acidic, basic, and neutral rate constants associated with a hydrolytic reaction. The latter constants can then be employed in determining the hydrolysis rates of chemicals at any pH of environmental concern at 25 °C.

(4) *Applicability and specificity.* There are several different common classes of organic chemicals that are subject to hydrolysis transformation, including esters, amides, lactones, carbamates, organophosphates, and alkyl halides. Processes other than nucleophilic displacement by water can also take place. Among these are elimination reactions that exhibit behavior similar to hydrolysis and, therefore, are also covered in this section.

(b) *Test procedures*—(1) *Test conditions*—(i) *Special laboratory equipment.* (A) A thermostatic bath that can be maintained at a temperature of 25 ±1 °C.

(B) A pH meter that can resolve differences of 0.05 pH units or less.

(C) Stoppered volumetric flasks (no grease) or glass ampoules that can be sealed.

(ii) *Purity of water.* Reagent-grade water (e.g., water meeting ASTM Type IIA standards or an equivalent grade) shall be used to minimize biodegradation. ASTM Type IIA water is described in ASTM D 1193–77 (Reapproved 1983), ''Standard Specification for Reagent Water.'' ASTM D 1193–77 (Reapproved 1983) is available for inspection at the National Archives and Records Administration (NARA). For information on the availability of this material at NARA, call 202–741–6030, or go to: *http://www.archives.gov/federal_register/code_of_federal_regulations/ibr_locations.html.* This incorporation by reference was approved by the Director of the Office of the Federal Register. This material is incorporated as it exists on the date of approval and a notice of any change in this material

will be published in the FEDERAL REGISTER. Copies of the incorporated material may be obtained from the Non-Confidential Information Center (NCIC) (7407), Office of Pollution Prevention and Toxics, U.S. Environmental Protection Agency, Room B–607 NEM, 401 M St., SW., Washington, DC 20460, between the hours of 12 p.m. and 4 p.m. weekdays excluding legal holidays, or from the American Society for Testing and Materials (ASTM), 1916 Race Street, Philadelphia, PA 19103.

(iii) *Sterilization.* All glassware shall be sterilized. Aseptic conditions shall be used in the preparation of all solutions and in carrying out all hydrolysis experiments to eliminate or minimize biodegradation. Glassware can be sterilized in an autoclave or by any other suitable method.

(iv) *Precautions for volatility.* If the chemical is volatile the reaction vessels shall be almost completely filled and sealed.

(v) *Temperature controls.* All hydrolysis reactions shall be carried out at 25 °C (±1 °C) and with the temperature controlled to ±0.1 °C.

(vi) *pH conditions.* It is recommended that all hydrolysis experiments be performed at pH 3.00, 7.00, and 11.00 ±0.05 using the appropriate buffers described in paragraph (b)(2)(i)(A) of this section.

(vii) *Concentration of solutions of chemical substances.* The concentration of the test chemical shall be less than one-half the chemical's solubility in water but not greater than 10^{-3} M.

(viii) *Effect of acidic and basic groups.* Complications can arise upon measuring the rate of hydrolysis of chemicals that reversibly ionize or are protonated in the pH range 3.00 to 11.00. Therefore, for these chemicals, it is recommended that these hydrolysis tests be performed at pH 5.00, 7.00, and 900 ±0.05 using the appropriate buffers described in paragraphs (b)(2)(i) (A) and (B) of this section. If a test chemical reversibly ionizes or protonates in the pH range 5.00 to 9.00, then it is recommended that additional hydrolysis tests should be carried out at pH 6.00 and 8.00 ±0.05 using the buffers described in paragraph (b)(2)(i)(B) of this section.

(ix) *Buffer catalysis.* For certain chemicals, buffers may catalyze the hydrolysis reaction. If this is suspected, hydrolysis rate determination shall be carried out with the appropriate buffers and the same experiments repeated at buffer concentrations lowered by at least a factor of five. If the hydrolysis reaction produces a change of greater than 0.05 pH units in the lower concentration buffers at the end of the measurement time, the test chemical concentrations also shall be lowered by at least a factor of five. Alternatively, test chemical concentrations and buffer concentrations may both be lowered simultaneously by a factor of five. A sufficient criterion for minimization of buffer catalysis is an observed equality in the hydrolysis rate constant for two different solutions differing in buffer or test chemical concentration by a factor of five.

(x) *Photosensitive chemicals.* The solution absorption spectrum can be employed to determine whether a particular chemical is potentially subject to photolytic transformation upon exposure to light. For chemicals that absorb light of wavelengths greater than 290 nm, the hydrolysis experiment shall be carried out in the dark, under amber or red safelights, in amber or red glassware, or employing other suitable methods for preventing photolysis. The absorption spectrum of the chemical in aqueous solution can be measured under § 796.1050.

(xi) *Chemical analysis of solutions.* In determining the concentrations of the test chemicals in solution, any suitable analytical method may be employed, although methods which are specific for the compound to be tested are preferred. Chromatographic methods are recommended because of their compound specificity in analyzing the parent chemical without interferences from impurities. Whenever practicable, the chosen analytical method should have a precision within ±5 percent.

(2) *Preparation*—(i) *Reagents and solutions*—(A) *Buffer solutions.* Prepare buffer solutions using reagent-grade chemicals and reagent-grade water as follows:

(*1*) pH 3.00: use 250 mL of 0.100M potassium hydrogen phthalate; 111 mL of 0.100M hydrochloric acid; and adjust

volume to 500 mL with reagent-grade water.

(*2*) pH 7.00: use 250 mL of 0.100M potassium dihydrogen phosphate; 145 mL of 0.100M sodium hydroxide; and adjust volume to 500 mL with reagent-grade water.

(*3*) pH 11.00: use 250 mL of 0.0500M sodium bicarbonate; 113 mL of 0.100M sodium hydroxide; and adjust volume to 500 mL with reagent-grade water.

(B) *Additional buffer solutions.* For chemicals that ionize or are protonated as discussed in paragraph (b)(1)(viii) of this section, prepare buffers using reagent-grade water and reagent-grade chemicals as follows:

(*1*) pH 5.00: use 250 mL of 0.100M potassium hydrogen phthalate; 113 mL of 0.100M sodium hydroxide; and adjust volume to 500 mL with reagent-grade water.

(*2*) pH 6.00: use 250 mL of 0.100M potassium dihydrogen phosphate; 28 mL of 0.100M sodium hydroxide; and adjust volume to 500 mL with reagent-grade water.

(*3*) pH 8.00: use 250 mL of 0.100M potassium dihydrogen phosphate; 234 mL of 0.100M sodium hydroxide; and adjust volume to 500 mL with reagent-grade water.

(*4*) pH 9.00: use 250 mL of 0.0250M borax (Na_2 B_4O_7); 23 mL of 0.100M hydrochloric aid; and adjust volume to 500 mL with reagent-grade water.

(C) *Adjustment of buffer concentrations.* (*1*) The concentrations of all the above buffer solutions are the maximum concentration to be employed in carrying out hydrolysis measurements. If the initial concentration of the test chemical is less than 10^{-3} M, the buffer concentration shall be lowered by a corresponding amount; e.g., if the initial test chemical concentration is 10^{-4} M, the concentration of the above buffers shall be reduced by a factor of 10. In addition, for those reactions in which an acid or base is not a reaction product, the minimum buffer concentration necessary for maintaining the pH within +0.05 units shall be employed.

(*2*) Check the pH of all buffer solutions with a pH meter at 25 °C and adjust the pH to the proper value, if necessary.

(D) *Preparation of test solution.* (*1*) If the test chemical is readily soluble in water, prepare an aqueous solution of the chemical in the appropriate buffer and determine the concentration of the chemical. Alternatively, a solution of the chemical in water may be prepared and added to an appropriate buffer solution and the concentration of the chemical then determined. In the latter case, the aliquot shall be small enough so that the concentration of the buffer in the final solution and the pH of the solution remain essentially unchanged. Do not employ heat in dissolving the chemical. The final concentration shall not be greater than one-half the chemical's solubility in water and not greater than 10^{-3} M.

(*2*) If the test chemical is too insoluble in pure water to permit reasonable handling and analytical procedures, it is recommended that the chemical be dissolved in reagent-grade acetonitrile and buffer solution and then added to an aliquot of the acetonitrile solution. Do not employ heat to dissolve the chemical in acetonitrile. The final concentration of the test chemical shall not be greater than one-half the chemical's solubility in water and not greater than 10^{-3} M. In addition, the final concentration of the acetonitrile shall be one volume percent or less.

(3) *Performance of the test.* Carry out all hydrolysis experiments by employing one of the procedures described in this paragraph. Prepare the test solutions as described in paragraph (b)(2)(i) of this section at pH 3.00, 7.00, and 11.00 ±0.05, and determine the initial test chemical concentration (C_o) in triplicate. Analyze each reaction mixture in triplicate at regular intervals, employing one of the following procedures:

(i) *Procedure 1.* Analyze each test solution at regular intervals to provide a minimum of six measurements with the extent of hydrolysis between 20 to 70 percent. Rates should be rapid enough so that 60 to 70 percent of the chemical is hydrolyzed in 672 hours.

(ii) *Procedure 2.* If the reaction is too slow to conveniently follow hydrolysis to high conversion in 672 hours but still rapid enough to attain at least 20 percent conversion, take 15 to 20 time points at regular intervals after 10 percent conversion is attained.

(iii) *Procedure 3.* (A) If chemical hydrolysis is less than 20 percent after 672 hours, determine the concentration (C) after this time period.

(B) If the pH at the end of concentration measurements employing any of the above three procedures has changed by more than 0.05 units from the initial pH, repeat the experiment using a solution having a test chemical concentration lowered sufficiently to keep the pH variation within 0.05 pH units.

(iv) *Analytical methodology.* Select an analytical method that is most applicable to the analysis of the specific chemical being tested under paragraph (b)(1)(xi) of this section.

(c) *Data and reporting*—(1) *Treatment of results.* (i) If Procedure 1 or 2 were employed in making concentration measurements, use a linear regression analysis with Equation 4 under paragraph (a)(2)(v)(B) of this section to calculate k_h at 25 °C for each pH employed in the hydrolysis experiments. Calculate the coefficient of determination (R^2) for each rate constant. Use Equation 3 under paragraph (a)(2)(v)(B) of this section to calculate the hydrolysis half-life using k_h.

(ii) If Procedure 3 was employed in making rate measurements, use the mean initial concentration (C_o) and the mean concentration of chemical (C) in Equation 4 under paragraph (a)(2)(v)(B) of this section to calculate k_h for each pH used in the experiments. Calculate the hydrolysis half-life using k_h in Equation 3 under paragraph (a)(2)(v)(B) of this section.

(iii) For each set of three concentration replicates, calculate the mean value of C and the standard deviation.

(iv) For test chemicals that are not ionized or protonated between pH 3 and 11, calculate k_A, k_B, and k_N using Equation 5.

(2) *Specific analytical and recovery procedures.* (i) Provide a detailed description or reference for the analytical procedure used, including the calibration data and precision.

(ii) If extraction methods were used to separate the solute from the aqueous solution, provide a description of the extraction method as well as the recovery data.

(3) *Test data report.* (i) For Procedures 1 and 2, report k_h, the hydrolysis half-life ($t_{1/2}$), and the coefficient of determination (R^2) for each pH employed in the rate measurements. In addition, report the individual values, the mean value, and the standard deviation for each set of replicate concentration measurements. Finally, report k_A, k_B, and k_N.

(ii) For Procedure 3, report k_h and the half-life for each pH employed in the rate measurements. In addition, report the individual values, the mean value, and the standard deviation for each set of replicate concentration measurements. Finally, report k_A, k_B, and k_N.

(iii) If, after 672 hours, the concentration (C) is the same as the initial concentration (C_o) within experimental error, then k_h cannot be calculated and the chemical can be reported as being persistent with respect to hydrolysis.

[50 FR 39252, Sept. 27, 1985, as amended at 53 FR 10391, Mar. 31, 1988; 53 FR 12526, Apr. 15, 1988; 53 FR 22323, June 15, 1988; 60 FR 34467, July 3, 1995; 69 FR 18803, Apr. 9, 2004]

PART 797—ENVIRONMENTAL EFFECTS TESTING GUIDELINES

Subpart A [Reserved]

Subpart B—Aquatic Guidelines

Sec.
797.1050 Algal acute toxicity test.
797.1300 Daphnid acute toxicity test.
797.1330 Daphnid chronic toxicity test.
797.1400 Fish acute toxicity test.
797.1600 Fish early life stage toxicity test.
797.1930 Mysid shrimp acute toxicity test.
797.1950 Mysid shrimp chronic toxicity test.

AUTHORITY: 15 U.S.C. 2603.

SOURCE: 50 FR 39321, Sept. 27, 1985, unless otherwise noted.

Subpart A [Reserved]

Subpart B—Aquatic Guidelines

§ 797.1050 Algal acute toxicity test.

(a) *Purpose.* The guideline in this section is intended for use in developing data on the acute toxicity of chemical substances and mixtures (''chemicals'') subject to environmental effects test regulations under the Toxic Substances Control Act (TSCA) (Pub. L. 94–469, 90 Stat. 2003, 15 U.S.C. 2601 et seq.). This

guideline prescribes test procedures and conditions using freshwater and marine algae to develop data on the phytotoxicity of chemicals. The United States Environmental Protection Agency (U.S. EPA) will use data from these tests in assessing the hazard of a chemical to the environment.

(b) *Definitions.* The definitions in section 3 of the Toxic Substances Control Act (TSCA) and the definitions in part 792—Good Laboratory Practice Standards of this chapter apply to this test guideline. The following definitions also apply to this guideline:

(1) *Algicidal* means having the property of killing algae.

(2) *Algistatic* means having the property of inhibiting algal growth.

(3) *ECx* means the experimentally derived chemical concentration that is calculated to effect X percent of the test criterion.

(4) *Growth* means a relative measure of the viability of an algal population based on the number and/or weight of algal cells per volume of nutrient medium or test solution in a specified period of time.

(5) *Static system* means a test container in which the test solution is not renewed during the period of the test.

(c) *Test procedures*—(1) *Summary of the test.* (i) In preparation for the test, fill test containers with appropriate volumes of nutrient medium and/or test solution. Start the test by introducing algae into the test and control containers in the growth chambers. Environmental conditions within the growth chambers are established at predetermined limits.

(ii) At the end of 96 hours enumerate the algal cells in all containers to determine inhibition or stimulation of growth in test containers compared to controls. Use data to define the concentration-response curve, and calculate the EC_{10}, EC_{50}, and EC_{90} values.

(2) [Reserved]

(3) *Range-finding test.* (i) A range-finding test should be conducted to determine:

(A) If definitive testing is necessary.

(B) Test chemical concentrations for the definitive test.

(ii) Algae are exposed to a widely spaced (e.g., log interval) chemical concentration series. The lowest value in the series, exclusive of controls, should be at the chemical's detection limit. The upper value, for water soluble compounds, should be the saturation concentration. No replicates are required; and nominal concentrations of the chemical are acceptable unless definitive testing is not required.

(iii) The test is performed once for each of the recommended algal species or selected alternates. Test chambers should contain equal volumes of test solution and approximately 1×10^4 *Selenastrum* cells/ml or 7.7×10^4 *Skeletonema* cells/ml of test solution. The algae should be exposed to each concentration of test chemical for up to 96 hours. The exposure period may be shortened if data suitable for the purposes of the range-finding test can be obtained in less time.

(iv) Definitive testing is not necessary if the highest chemical concentration tested (water saturation concentration or 1000 mg/l) results in less than a 50 percent reduction in growth or if the lowest concentration tested (analytical detection limit) results in greater than a 50 percent reduction in growth.

(4) *Definitive test.* (i) The purpose of the definitive test is to determine the concentration response curves, the EC_{10}'s, EC_{50}'s, and EC_{90}'s for algal growth for each species tested, with a minimum amount of testing beyond the range-finding test.

(ii) Algae should be exposed to five or more concentrations of the test chemical in a geometric series in which the ratio is between 1.5 and 2.0 (e.g., 2, 4, 8, 16, 32, and 64 mg/l). Algae shall be placed in a minimum of three replicate test containers for each concentration of test chemical and control. More than three replicates may be required to provide sufficient quantities of test solution for determination of test substance concentration at the end of the test. Each test chamber should contain equal volumes of test solution and approximately 1×10^4 *Selenastrum* cells/ml or 7.7×10^4 *Skeletonema* cells/ml of test solution. The chemical concentrations should result in greater than 90 percent of algal growth being inhibited or stimulated at the highest concentrations of test substance compared to controls.

(iii) Every test shall include a control consisting of the same nutrient medium, conditions, procedures, and algae from the same culture, except that none of the test substance is added. If a carrier is present in any of the test chambers, a separate carrier control is required.

(iv) The test begins when algae from 5- to 10-day-old stock cultures are placed in the test chambers containing test solutions having the appropriate concentrations of the test substance. Algal growth in controls should reach the logarithmic growth phase by 96 hours. If logarithmic growth cannot be demonstrated, the test shall be repeated. At the end of 24, 48, 72, and 96 hours the algal growth response (number or weight of algal cells/ml) in all test containers and controls shall be determined by an indirect (spectrophotometry, electronic cell counters, dry weight, etc.) or a direct (actual microscopic cell count) method. Indirect methods shall be calibrated by a direct microscopic count. The percentage inhibition or stimulation of growth for each concentration, EC_{10}, EC_{50}, EC_{90} and the concentration-response curves are determined from these counts.

(v) At the end of the definitive test, the following additional analyses of algal growth response shall be performed:

(A) Determine whether the altered growth response between controls and test algae was due to a change in relative cell numbers, cell sizes or both. Also note any unusual cell shapes, color differences, flocculations, adherence of algae to test containers, or aggregation of algal cells.

(B) In test concentrations where growth is maximally inhibited, algistatic effects may be differentiated from algicidal effects by the following two methods for *Skeletonema* and by the second method for *Selenastrum*.

(*1*) Add 0.5 ml of a 0.1 percent solution (weight/volume) of Evans blue stain to a 1 milliliter aliquot of algae from a control container and to a 1 milliliter aliquot of algae from the test container having the lowest concentration of test chemical which completely inhibited algal growth (if algal growth was not completely inhibited, select an aliquot of algae for staining from the test container having the highest concentration of test chemical which inhibited algal growth). Wait 10 to 30 minutes, examine microscopically, and determine the percent of the cells which stain blue (indicating cell mortality). A staining control shall be performed concurrently using heat-killed or formaldehyde-preserved algal cells; 100 percent of these cells shall stain blue.

(*2*) Remove 0.5 ml aliquots of test solution containing growth-inhibited algae from each replicate test container having the concentration of test substance evaluated in paragraph (c)(4)(v)(B)(*1*) of this section. Combine these aliquots into a new test container and add a sufficient volume of fresh nutrient medium to dilute the test chemical to a concentration which does not affect growth. Incubate this subculture under the environmental conditions used in the definitive test for a period of up to 9 days, and observe for algal growth to determine if the algistatic effect noted after the 96-hour test is reversible. This subculture test may be discontinued as soon as growth occurs.

(5) [Reserved]

(6) *Analytical measurements*—(i) *Chemical.* (A) Glass distilled or deionized water shall be used in the preparation of the nutrient medium. The pH of the test solution shall be measured in the control and test containers at the beginning and at the end of the definitive test. The concentration of test chemical in the test containers shall be determined at the beginning and end of the definitive test by standard analytical methods which have been validated prior to the test. An analytical method is unacceptable if likely degradation products of the chemical, such as hydrolysis and oxidation products, give positive or negative interference.

(B) At the end of the test and after aliquots have been removed for algal growth-response determinations, microscopic examination, mortal staining, or subculturing, the replicate test containers for each chemical concentration may be pooled into one sample. An aliquot of the pooled sample may then be taken and the concentration of test chemical determined. In

addition, the concentration of test chemical associated with the algae alone should be determined. Separate and concentrate the algal cells from the test solution by centrifuging or filtering the remaining pooled sample and measure the test substance concentration in the algal-cell concentrate.

(ii) *Numerical.* Algal growth response (as percent of inhibition or stimulation in the test solutions compared to the controls) is calculated at the end of the test. Mean and standard deviation should be calculated and plotted for each treatment and control. Appropriate statistical analyses should provide a goodness-of-fit determination for the concentration response curves. The concentration response curves are plotted using the mean measured test solution concentrations obtained at the end of the test.

(d) *Test conditions*—(1) *Test species.* Species of algae recommended as test organisms for this test are the freshwater green alga, *Selenastrum capricornutum,* and the marine diatom, *Skeletonema costatum.* Algae to be used in acute toxicity tests may be initially obtained from commercial sources and subsequently cultured using sterile technique. Toxicity testing shall not be performed until algal cultures are shown to be actively growing (i.e., capable of logarithmic growth within the test period) in at least 2 subcultures lasting 7 days each prior to the start of the definitive test. All algae used for a particular test shall be from the same source and the same stock culture. Test algae shall not have been used in a previous test, either in a treatment or a control.

(2) *Facilities*—(i) *General.* (A) Facilities needed to perform this test include: a growth chamber or a controlled environment room that can hold the test containers and will maintain the air temperature, lighting intensity and photoperiod specified in this test guideline; apparatus for culturing and enumerating algae; a source of distilled and/or deionized water; and apparatus for carrying out analyses of the test chemical.

(B) Disposal facilities should be adequate to accommodate spent glassware, algae and test solutions at the end of the test and any bench covering, lab clothing, or other contaminated materials.

(ii) *Test containers.* Erlenmeyer flasks should be used for test containers. The flasks may be of any volume between 125 and 500 ml as long as the same size is used throughout a test and the test solution volume does not exceed 50 percent of the flask volume.

(iii) *Cleaning and sterilization.* New test containers may contain substances which inhibit growth of algae. They shall therefore be cleaned thoroughly and used several times to culture algae before being used in toxicity testing. All glassware used in algal culturing or testing shall be cleaned and sterilized prior to use according to standard good laboratory practices.

(iv) *Conditioning.* Test containers should be conditioned by a rinse with the appropriate test solutions prior to the start of the test. Decant and add fresh test solutions after an appropriate conditioning period for the test chemical.

(v) *Nutrient medium.* (A) Formulation and sterilization of nutrient medium used for algal culture and preparation of test solutions should conform to those currently recommended by the U.S. EPA for freshwater and marine algal bioassays. No chelating agents are to be included in the nutrient medium used for test solution preparation. Nutrient medium should be freshly prepared for algal testing and may be dispensed in appropriate volumes in test containers and sterilized by autoclaving or filtration. The pH of the nutrient medium shall be 7.5 (±0.1) for *Selenastrum* and 8.1 (±0.1) for *Skeletonema* at the start of the test and may be adjusted prior to test chemical addition with 0.1N NaOH or HC1.

(B) Dilution water used for preparation of nutrient medium and test solutions should be filtered, deionized or glass distilled. Saltwater for marine algal nutrient medium and test solutions should be prepared by adding a commercial, synthetic, sea salt formulation or a modified synthetic seawater formulation to distilled/deionized water to a concentration of 30 parts per thousand.

(vi) *Carriers.* Nutrient medium shall be used in making stock solutions of

the test chemical. If a carrier other than nutrient medium is absolutely necessary to dissolve the chemical, the volume used shall not exceed the minimum volume necessary to dissolve or suspend the chemical in the test solution.

(3) *Test parameters.* (i) The test temperature shall be 24 °C for *Selenastrum* and 20 °C for *Skeletonema.* Excursions from the test temperature shall be no greater than ±2 °C. Temperature should be recorded hourly during the test.

(ii) Test chambers containing *Selenastrum* shall be illuminated continuously and those containing *Skeletonema* shall be provided a 14-hour light and 10-hour dark photoperiod with a 30 minute transition period under fluorescent lamps providing 300 ±25 uEin/m² sec (approximately 400 ft-c) measured adjacent to the test chambers at the level of test solution.

(iii) Stock algal cultures should be shaken twice daily by hand. Test containers shall be placed on a rotary shaking apparatus and oscillated at approximately 100 cycles/minute for *Selenastrum* and at approximately 60 cycles/minute for *Skeletonema* during the test. The rate of oscillation should be determined at least once daily during testing.

(iv) The pH of nutrient medium in which algae are subcultured shall be 7.5 (±0.1) for *Selenastrum* and 8.1 (±0.1) for *Skeletonema,* and is not adjusted after the addition of the algae. The pH of all test solutions shall be measured at the beginning and end of the test.

(v) Light intensity shall be monitored at least daily during the test at the level of the test solution.

(e) *Reporting.* The sponsor shall submit to the EPA all data developed by the test that are suggestive or predictive of acute phytotoxicity. In addition to the general reporting requirements prescribed in part 792—*Good Laboratory Practice Standards of this Chapter,* the following shall be reported:

(1) Detailed information about the test organisms, including the scientific name, method of verification, and source.

(2) A description of the test chambers and containers, the volumes of solution in the containers, the way the test was begun (e.g., conditioning, test substance additions, etc.), the number of replicates, the temperature, the lighting, and method of incubation, oscillation rates, and type of apparatus.

(3) The concentration of the test chemical in the control and in each treatment at the end of the test and the pH of the solutions.

(4) The number of algal cells per milliliter in each treatment and control and the method used to derive these values at the beginning, 24, 48, and 72 hours, and end of the test; the percentage of inhibition or stimulation of growth relative to controls; and other adverse effect in the control and in each treatment.

(5) The 96-hour EC_{10}, EC_{50}, and EC_{90} values, and when sufficient data have been generated, the 24, 48, and 72 hour LC_{50}'s and 95 percent confidence limits, the methods used to derive these values, the data used to define the shape of the concentration-response curve and the goodness-of-fit determination.

(6) Methods and data records of all chemical analyses of water quality and test substance concentrations, including method validations and reagent blanks.

(7) The results of any optional analyses such as: Microscopic appearance of algae, size or color changes, percent mortality of cells and the fate of subcultured cells, the concentration of test substance associated with algae and test solution supernate or filtrate.

(8) If the range-finding test showed that the highest concentration of the chemical tested (not less than 1000 mg/l or saturation concentration) had no effect on the algae, report the results and concentration and a statement that the chemical is of minimum phytotoxic concern.

(9) If the range-finding test showed greater than a 50 percent inhibition of algal growth at a test concentration below the analytical detection limit, report the results, concentration, and a statement that the chemical is phytotoxic below the analytical detection limit.

[50 FR 39321, Sept. 27, 1985, as amended at 52 FR 19058, May 20, 1987]

§ 797.1300 Daphnid acute toxicity test.

(a) *Purpose.* This guideline is intended for use in developing data on

the acute toxicity of chemical substances and mixtures (''chemicals'') subject to environmental effects test regulations under the Toxic Substances Control Act (TSCA) (Pub. L. 94–469, 90 Stat. 2003, 15 U.S.C. 2601 *et seq.*). This guideline prescribes an acute toxicity test in which daphnids (*Daphnia magna* or *D. pulex*) are exposed to a chemical in static and flow-through systems. The United States Environmental Protection Agency will use data from this test in assessing the hazard a chemical may present in the aquatic environment.

(b) *Definitions.* The definitions in section 3 of the Toxic Substances Control Act (TSCA) and part 792—*Good Laboratory Practice Standards* of this chapter apply to this test guideline. In addition, the following definitions apply to this guideline:

(1) *Brood stock* means the animals which are cultured to produce test organisms through reproduction.

(2) EC_{50} means that experimentally derived concentration of test substance in dilution water that is calculated to affect 50 percent of a test population during continuous exposure over a specified period of time. In this guideline, the effect measured is immobilization.

(3) *Ephippium* means a resting egg which develops under the carapace in response to stress conditions in daphnids.

(4) *Flow-through* means a continuous or an intermittent passage of test solution or dilution water through a test chamber or culture tank with no recycling.

(5) *Immobilization* means the lack of movement by the test organisms except for minor activity of the appendages.

(6) *Loading* means the ratio of daphnid biomass (grams, wet weight) to the volume (liters) of test solution in a test chamber at a point in time, or passing through the test chamber during a specific interval.

(7) *Static system* means a test system in which the test solution and test organisms are placed in the test chamber and kept there for the duration of the test without renewal of the test solution.

(c) *Test procedures*—(1) *Summary of the test.* (i) Test chambers are filled with appropriate volumes of dilution water. In the flow-through test, the flow of dilution water through each chamber is adjusted to the rate desired. The test chemical is introduced into each treatment chamber. The addition of test chemical in the flow-through system is conducted at a rate which is sufficient to establish and maintain the desired concentration in the test chamber. The test is started within 30 minutes after the test chemical has been added and uniformly distributed in static test chambers or after the concentration of test chemical in each flow-through test chamber reaches the prescribed level and remains stable. At the initiation of the test, daphnids which have been cultured and acclimated in accordance with the test design are randomly placed into the test chambers. Daphnids in the test chambers are observed periodically during the test, the immobile daphnids removed, and the findings recorded.

(ii) Dissolved oxygen concentration, pH, temperature, the concentration of test chemical and other water quality parameters are measured at specified intervals in selected test chambers. Data are collected during the test to develop concentration-response curves and determine EC_{50} values for the test chemical.

(2) [Reserved]

(3) *Range-finding test.* (i) A range-finding test should be conducted to establish test solution concentrations for the definitive test.

(ii) The daphnids should be exposed to a series of widely spaced concentrations of the test chemical (e.g., 1, 10, 100 mg/1, etc.), usually under static conditions.

(iii) A minimum of five daphnids should be exposed to each concentration of test chemical for a period of 48 hours. The exposure period may be shortened if data suitable for the purpose of the range-finding test can be obtained in less time. No replicates are required and nominal concentrations of the chemical are acceptable.

(4) *Definitive test.* (i) The purpose of the definitive test is to determine the concentration-response curves and the 24- and 48-hour EC_{50} values with the

minimum amount of testing beyond the range-finding test.

(ii) A minimum of 20 daphnids per concentration shall be exposed to five or more concentrations of the chemical chosen in a geometric series in which the ratio is between 1.5 and 2.0 (e.g., 2, 4, 8, 16, 32, and 64 mg/l). An equal number of daphnids shall be placed in two or more replicates. If solvents, solubilizing agents or emulsifiers have to be used, they shall be commonly used carriers and shall not possess a synergistic or antagonistic effect on the toxicity of the test chemical. The concentration of solvent should not exceed 0.1 mg/l. The concentration ranges shall be selected to determine the concentration-response curves and EC_{50} values at 24 and 48 hours. Concentration of test chemical in test solutions should be analyzed prior to use.

(iii) Every test shall include controls consisting of the same dilution water, conditions, procedures and daphnids from the same population (culture container), except that none of the chemical is added.

(iv) The dissolved oxygen concentration, temperature and pH shall be measured at the beginning and end of the test in each chamber.

(v) The test duration is 48 hours. The test is unacceptable if more than 10 percent of the control organisms are immobilized during the 48-hour test period. Each test chamber shall be checked for immobilized daphnids at 24 and 48 hours after the beginning of the test. Concentration-response curves and 24-hour and 48-hour EC_{50} values for immobilization shall be determined along with their 95 percent confidence limits.

(vi) In addition to immobility, any abnormal behavior or appearance shall also be reported.

(vii) Test organisms shall be impartially distributed among test chambers in such a manner that test results show no significant bias from the distributions. In addition, test chambers within the testing area shall be positioned in a random manner or in a way in which appropriate statistical analyses can be used to determine the variation due to placement.

(viii) The concentration of the test chemical in the chambers should be measured as often as is feasible during the test. In the static test the concentration of test chemical shall be measured, at a minimum, at the beginning of the test and at the end of the test in each test chamber. In the flow-through test the concentration of test chemical shall be measured at a minimum:

(A) In each chamber at the beginning of the test and at 48 hours after the start of the test;

(B) In at least one appropriate chamber whenever a malfunction is detected in any part of the test substance delivery system.

Among replicate test chambers of a treatment concentration, the measured concentration of the test chemical shall not vary more than ±20 percent.

(5) [Reserved]

(6) *Analytical measurements.* (i) *Test chemical.* Deionized water should be used in making stock solutions of the test chemical. Standard analytical methods should be used whenever available in performing the analyses. The analytical method used to measure the amount of test chemical in a sample shall be validated before beginning the test by appropriate laboratory practices. Any analytical method is not acceptable if likely degradation products of the test chemical, such as hydrolysis and oxidation products, give positive or negative interferences which cannot be systematically identified and corrected mathematically.

(ii) *Numerical.* The number of immobilized daphnids shall be counted during each definitive test. Appropriate statistical analyses should provide a goodness-of-fit determination for the concentration-response curves. A 24- and 48-hour EC_{50} and corresponding 95 percent interval shall be calculated.

(d) *Test conditions*—(1) *Test species*—(i) *Selection.* (A) The cladocerans, *Daphnia magna* or *D. pulex*, are the test species to be used in this test. Either species may be used for testing of a particular chemical. The species identity of the test organisms should be verified using appropriate systematic keys. First instar daphnids, ≤24 hours old, are to be used to start the test.

(B) Daphnids to be used in acute toxicity tests should be cultured at the

test facility. Records should be kept regarding the source of the initial stock and culturing techniques. All organisms used for a particular test shall have originated from the same culture population.

(C) Daphnids shall not be used for a test (*1*) if cultures contain ephippia; (*2*) if adults in the cultures do not produce young before day 12; (*3*) if more than 20 percent of the culture stock die during the 2 days preceding the test; (*4*) if adults in the culture do not produce an average of at least 3 young per adult per day over the 7-day period prior to the test and (*5*) if daphnids have been used in any portion of a previous test, either in a treatment or in a control.

(ii) *Acclimation.* (A) Brood daphnids shall be maintained in 100-percent dilution water at the test temperature for at least 48 hours prior to the start of the test. This is easily accomplished by culturing them in the dilution water at the test temperature. During production of neonates, daphnids should not be fed.

(B) During culturing and acclimation to the dilution water, daphnids should be maintained in facilities with background colors and light intensities similar to those of the testing area.

(iii) *Care and handling.* (A) Daphnids should be cultured in dilution water under similar environmental conditions to those used in the test. Organisms should be handled as little as possible. When handling is necessary it should be done as gently, carefully, and quickly as possible. During culturing and acclimation, daphnids should be observed carefully for ephippia and other signs of stress, physical damage and mortality. Dead and abnormal individuals shall be discarded. Organisms that touch dry surfaces or are dropped or injured in handling shall be discarded.

(B) Smooth glass tubes (I.D. greater than 5 mm) equipped with rubber bulb should be used for transferring daphnids with minimal culture media carry-over. Care should be exercised to introduce the daphnids below the surface of any solution to avoid trapping air under the carapace.

(iv) *Feeding.* A variety of foods (e.g., unicellular green algae) have been demonstrated to be adequate for daphnid culture. Daphnids shall not be fed during testing.

(2) *Facilities*—(i) *Apparatus.* (A) Facilities needed to perform this test include: (*1*) Containers for culturing and acclimating daphnids; (*2*) a mechanism for controlling and maintaining the water temperature during the culturing, acclimation, and test periods; (*3*) apparatus for straining particulate matter, removing gas bubbles, or aerating the water as necessary; and (*4*) an apparatus for providing a 16-hour light and 8-hour dark photoperiod with a 15 to 30 minute transition period. In addition, the flow-through system shall contain appropriate test chambers in which to expose daphnids to the test chemical and an appropriate test substance delivery system.

(B) Facilities should be well ventilated and free of fumes and disturbances that may affect the test organisms.

(C) Test chambers shall be loosely covered to reduce the loss of test solution or dilution water due to evaporation and to minimize the entry of dust or other particulates into the solutions.

(ii) *Construction materials.* (A) Materials and equipment that contact test solutions should be chosen to minimize sorption of test chemicals from the dilution water and should not contain substances that can be leached into aqueous solution in quantities that can affect the test results.

(B) For static tests, daphnids can be conveniently exposed to the test chemical in 250 ml beakers or other suitable containers.

(C) For flow-through tests, daphnids can be exposed in glass or stainless steel containers with stainless steel or nylon screen bottoms. The containers should be suspended in the test chamber in such a manner to insure that the test solution flows regularly into and out of the container and that the daphnids are always submerged in at least 5 centimeters of test solution. Test chambers can be constructed using 250 ml beakers or other suitable containers equipped with screened overflow holes, standpipes or V-shaped notches.

(iii) *Dilution water.* (A) Surface or ground water, reconstituted water or

dechlorinated tap water are acceptable as dilution water if daphnids will survive in it for the duration of the culturing, acclimation and testing periods without showing signs of stress. The quality of the dilution water should be constant and should meet the following specifications:

Substance	Maximum concentration
Particulate matter	20 mg/liter.
Total organic carbon or	2 mg/liter.
Chemical oxygen demand	5 mg/liter.
Un-ionized ammonia	1 μg/liter.
Residual chlorine	<3 μg/liter.
Total organophosphorus pesticides	50 ng/liter.
Total organochlorine pesticides plus polychlorinated biphenyls (PCBs) or.	50 ng/liter.
Organic chlorine	25 ng/liter.

(B) The above water quality parameters under paragraph (d)(2)(iii)(A) of this section shall be measured at least twice a year or whenever it is suspected that these characteristics may have changed significantly. If dechlorinated tap water is used, daily chlorine analysis shall be performed.

(C) If the diluent water is from a ground or surface water source, conductivity and total organic carbon (TOC) or chemical oxygen demand (COD) shall be measured. Reconstituted water can be made by adding specific amounts of reagent-grade chemicals to deionized or distilled water. Glass distilled or carbon-filtered deionized water with a conductivity less than 1 μohm/cm is acceptable as the diluent for making reconstituted water.

(iv) *Cleaning.* All test equipment and test chambers shall be cleaned before each use using standard laboratory procedures.

(v) *Test substance delivery system.* In flow-through tests, proportional diluters, metering pump systems, or other suitable devices should be used to deliver test chemical to the test chambers. The system shall be calibrated before each test. Calibration includes determining the flow rate through each chamber and the concentration of the test chemical in each chamber. The general operation of the test substance delivery system should be checked twice during a test. The 24-hour flow through a test chamber shall be equal to at least 5 times the volume of the test chamber. During a test, the flow rates should not vary more than 10 percent from any one test chamber to another.

(3) *Test parameters.* Environmental parameters of the water contained in test chambers shall be maintained as specified below:

(i) The test temperature shall be 20 °C. Excursions from the test temperature shall be no greater than ±2 °C.

(ii) Dissolved oxygen concentration between 60 and 105 percent saturation. Aeration, if needed to achieve this level, shall be done before the addition of the test chemical. All treatment and control chambers shall be given the same aeration treatment.

(iii) The number of daphnids placed in a test chamber shall not affect test results. Loading shall not exceed 40 daphnids per liter test solution in the static system. In the flow-through test, loading limits will vary depending on the flow rate of dilution water. Loading shall not cause the dissolved oxygen concentration to fall below the recommended levels.

(iv) Photoperiod of 16 hours light and 8 hours darkness.

(e) *Reporting.* The sponsor shall submit to the U.S. EPA all data developed by the test that are suggestive or predictive of acute toxicity and all concomitant gross toxicological manifestations. In addition to the reporting requirements prescribed in part 792—*Good Laboratory Practice Standards* of this chapter, the reporting of test data shall include the following:

(1) The name of the test, sponsor, testing laboratory, study director, principal investigator, and dates of testing.

(2) A detailed description of the test chemical including its source, lot number, composition (identity and concentration or major ingredients and major impurities), known physical and chemical properties and any carriers or other additives used and their concentrations.

(3) The source of the dilution water, its chemical characteristics (e.g., conductivity, hardness, pH, etc.) and a description of any pretreatment.

(4) Detailed information about the daphnids used as brood stock, including the scientific name and method of

verification, age, source, treatments, feeding history, acclimation procedures, and culture method. The age of the daphnids used in the test shall be reported.

(5) A description of the test chambers, the volume of solution in the chambers, the way the test was begun (e.g., conditioning, test chemical additions), the number of test organisms per test chamber, the number of replicates per treatment, the lighting, the method of test chemical introduction or the test substance delivery system and the flow rate (in flow-through test) expressed as volume additions per 24 hours.

(6) The concentration of the test chemical in each test chamber at times designated for static and flow-through tests.

(7) The number and percentage of organisms that were immobilized or showed any adverse effects in each test chamber at each observation period.

(8) Utilizing the average measured test chemical concentration, concentration-response curves should be fitted to immobilization data at 24 and 48 hours. A statistical test of goodness-of-fit should be performed and the results reported.

(9) The 24- and 48-hour EC_{50} values and their respective 95 percent confidence limits using the mean measured test chemical concentration and the methods used to calculate both the EC_{50} values and their confidence limits.

(10) All chemical analyses of water quality and test chemical concentrations, including methods, method validations and reagent blanks.

(11) The data records of the culture, acclimation and test temperatures.

(12) Any deviation from this test guideline and anything unusual about the test, e.g., diluter failure, temperature fluctuations, etc.

[50 FR 39321, Sept. 27, 1985, as amended at 52 FR 19059, May 20, 1987]

§ 797.1330 Daphnid chronic toxicity test.

(a) *Purpose.* This guideline is intended for use in developing data on the chronic toxicity of chemical substances and mixtures (''chemicals'') subject to environmental effects test regulations under the Toxic Substances Control Act (TSCA) (Pub. L. 94–469, 90 Stat. 2003, 15 U.S.C. 2601 *et seq.*). This guideline prescribes a chronic toxicity test in which daphnids are exposed to a chemical in a renewal or a flow-through system. The United States Environmental Protection Agency will use data from this test in assessing the hazard a chemical may present to the aquatic environment.

(b) *Definitions.* The definitions in section 3 of the Toxic Substances Control Act (TSCA), and the definitions in part 792 *Good Laboratory Practice Standards* of this chapter apply to this test guideline. In addition, the following definitions apply to this guideline:

(1) *Brood stock* means the animals which are cultured to produce test organisms through reproduction.

(2) *Chronic toxicity test* means a method used to determine the concentration of a substance in water that produces an adverse effect on a test organism over an extended period of time. In this test guideline, mortality and reproduction (and optionally, growth) are the criteria of toxicity.

(3) EC_{50} means that experimentally derived concentration of test substance in dilution water that is calculated to affect 50 percent of a test population during continuous exposure over a specified period of time. In this guideline, the effect measured is immobilization.

(4) *Ephippium* means a resting egg which develops under the carapace in response to stress conditions in daphnids.

(5) *Flow-through* means a continuous or intermittent passage of test solution or dilution water through a test chamber or culture tank with no recycling.

(6) *Immobilization* means the lack of movement by daphnids except for minor activity of the appendages.

(7) *Loading* means the ratio of daphnid biomass (grams, wet weight) to the volume (liters) of test solution in a test chamber at a point in time or passing through the test chamber during a specific interval.

(8) *MATC (Maximum Acceptable Toxicant Concentration)* means the maximum concentration at which a chemical can be present and not be toxic to the test organism.

(9) *Renewal system* means the technique in which test organisms are periodically transferred to fresh test solution of the same composition.

(c) *Test procedures*—(1) *Summary of the test.* (i) Test chambers are filled with appropriate volumes of dilution water. In the flow-through test the flow of dilution water through each chamber is then adjusted to the rate desired. The test substance is introduced into each test chamber. The addition of test substance in the flow-through system is done at a rate which is sufficient to establish and maintain the desired concentration of test substance in the test chamber.

(ii) The test is started within 30 minutes after the test substance has been added and uniformly distributed in the test chambers in the renewal test or after the concentration of test substance in each test chamber of the flow-through test system reaches the prescribed level and remains stable. At the initiation of the test, daphnids which have been cultured or acclimated in accordance with the test design, are randomly placed into the test chambers. Daphnids in the test chambers are observed periodically during the test, immobile adults and offspring produced are counted and removed, and the findings are recorded. Dissolved oxygen concentration, pH, temperature, the concentration of test substance, and other water quality parameters are measured at specified intervals in selected test chambers. Data are collected during the test to determine any significant differences ($p \leq 0.05$) in immobilization and reproduction as compared to the control.

(2) [Reserved]

(3) *Range-finding test.* (i) A range-finding test should be conducted to establish test solution concentrations for the definitive test.

(ii) The daphnids should be exposed to a series of widely spaced concentrations of the test substance (e.g., 1, 10, 100 mg/l), usually under static conditions.

(iii) A minimum of five daphnids should be exposed to each concentration of test substance for a period of time which allows estimation of appropriate chronic test concentrations. No replicates are required and nominal concentrations of the chemical are acceptable.

(4) *Definitive test.* (i) The purpose of the definitive test is to determine concentration-response curves, EC_{50} values and effects of a chemical on immobilization and reproduction during chronic exposure.

(ii) A minimum of 20 daphnids per concentration shall be exposed to five or more concentrations of the chemical chosen in a geometric series in which the ratio is between 1.5 and 2.0 (e.g., 2, 4, 8, 16, 32, 64 mg/l). An equal number of daphnids shall be placed in two or more replicates. The concentration ranges shall be selected to determine the concentration-response curves, EC_{50} values and MATC. Solutions shall be analyzed for chemical concentration at designated times during the test.

(iii) Every test shall include controls consisting of the same dilution water, conditions, procedures and daphnids from the same population (culture container), except that none of the chemical is added.

(iv) The test duration is 21 days. The test is unacceptable if:

(A) More than 20 percent of the control organisms appear to be immobilized, stressed or diseased during the test.

(B) Each control daphnid living the full 21 days produces an average of less than 60 young.

(C) Any ephippia are produced by control animals.

(v) The number of immobilized daphnids in each chamber shall be recorded on day 21 of the test. After offspring are produced, they shall be counted and removed from the test chambers every 2 or 3 days. Concentration-response curves, EC_{50} values and associated 95 percent confidence limits for adult immobilization shall be determined for day 21. An MATC shall be determined for the most sensitive test criteria measured (number of adult animals immobilized, number of young per adult, and number of immobilized young per adult).

(vi) In addition to immobility, any abnormal behavior or appearance shall also be reported.

(vii) Test organisms shall be impartially distributed among test chambers in such a manner that test results show

no significant bias from the distributions. In addition, test chambers within the testing area shall be positioned in a random manner as in a way in which appropriate statistical analyses can be used to determine the variation due to placement.

(5) [Reserved]

(6) *Analytical measurements.* (i) *Test chemical.* Deionized water should be used in making stock solutions of the test substance. Standard analytical methods should be used whenever available in performing the analyses. The analytical method used to measure the amount of test substance in a sample shall be validated before beginning the test by appropriate laboratory practices. An analytical method is not acceptable if likely degradation products of the test substance, such as hydrolysis and oxidation products, give positive or negative interferences which cannot be systematically identified and corrected mathematically.

(ii) *Numerical.* The number of immobilized adults, total offspring per adult, and immobilized offspring per adult shall be counted during each test. Appropriate statistical analyses should provide a goodness-of-fit determination for the adult immobilization concentration-response curves calculated on day 21. A 21-day EC_{50} based on adult immobilization and corresponding 95 percent confidence intervals shall also be calculated. Appropriate statistical tests (e.g., analysis of variance, mean separation test) should be used to test for significant chemical effects on chronic test criteria (cumulative number of immobilized adults, cumulative number of offspring per adult and cumulative number of immobilized offspring per adult) on day 21. An MATC shall be calculated using these chronic test criteria.

(d) *Test conditions*—(1) *Test species*—(i) *Selection.* (A) The cladocerans, *Daphnia magna* or *D. pulex,* are the species to be used in this test. Either species can be utilized for testing of a particular chemical. The species identity of the test organisms should be verified using appropriate systematic keys.

(B) First instar daphnids, ≤24 hours old, are to be used to start the test.

(ii) *Acquisition.* (A) Daphnids to be used in chronic toxicity tests should be cultured at the test facility. Records should be kept regarding the source of the initial stock and culturing techniques. All organisms used for a particular test shall have originated from the same culture population.

(B) Daphnids shall not be used for a test if:

(*1*) Cultures contain ephippia.

(*2*) Adults in the cultures do not produce young before day 12.

(*3*) More than 20 percent of the culture stock die in the 2 days preceding the test.

(*4*) Adults in the culture do not produce an average of at least 3 young per adult per day over the 7-day period prior to the test.

(*5*) Daphnids have been used in any portion of a previous test either in a treatment or in a control.

(iii) *Feeding.* (A) During the test the daphnids shall be fed the same diet and with the same frequency as that used for culturing and acclimation. All treatments and control(s) shall receive, as near as reasonably possible, the same ration of food on a per-animal basis.

(B) The food concentration depends on the type used. Food concentrations should be sufficient to support normal growth and development and to allow for asexual (parthenogenic) reproduction. For automatic feeding devices, a suggested rate is 5 to 7 mg food (either solids or algal cells, dry weight) per liter dilution water or test solution. For manual once-a-day feeding, a suggested rate is 15 mg food (dry weight) per liter dilution water or test solution.

(iv) *Loading.* The number of test organisms placed in a test chamber shall not affect test results. Loading shall not exceed 40 daphnids per liter in the renewal system. In the flow-through test, loading limits will vary depending on the flow rate of the dilution water. Loading shall not cause the dissolved oxygen concentration to fall below the recommended level.

(v) *Care and handling of test organisms.* (A) Daphnids should be cultured in dilution water under similar environmental conditions to those used in the test. A variety of foods have been demonstrated to be adequate for daphnid

culture. They include algae, yeasts and a variety of mixtures.

(B) Organisms should be handled as little as possible. When handling is necessary it should be done as gently, carefully, and quickly as possible. During culturing and acclimation, daphnids should be observed carefully for ephippia and other signs of stress, physical damage, and mortality. Dead and abnormal individuals shall be discarded. Organisms that touch dry surfaces or are dropped or injured during handling shall be discarded.

(C) Smooth glass tubes (I.D. greater than 5mm) equipped with a rubber bulb can be used for transferring daphnids with minimal culture media carryover.

(D) Care should be exercised to introduce the daphnids below the surface of any solution so as not to trap air under the carapace.

(vi) *Acclimation.* (A) Brood daphnids shall be maintained in 100 percent dilution water at the test temperature for at least 48 hours prior to the start of the test. This is easily accomplished by culturing them in dilution water at the test temperature. During acclimation, daphnids shall be fed the same food as will be used for the definitive test.

(B) During culturing and acclimation to the dilution water, daphnids should be maintained in facilities with background colors and light intensities similar to those of the testing area.

(2) *Facilities*—(i) *General.* (A) Facilities needed to perform this test include:

(*1*) Containers for culturing and acclimating daphnids.

(*2*) A mechanism for controlling and maintaining the water temperature during the culturing, acclimation and test periods.

(*3*) Apparatus for straining particulate matter, removing gas bubbles, or aerating the water when water supplies contain particulate matter, gas bubbles, or insufficient dissolved oxygen, respectively.

(*4*) An apparatus for providing a 16-hour light and 8-hour dark photoperiod.

(*5*) An apparatus to introduce food if continuous or intermittent feeding is used.

(*6*) In addition, the flow-through test shall contain appropriate test chambers in which to expose daphnids to the test substance and an appropriate test substance delivery system.

(B) Facilities should be well ventilated and free of fumes and other disturbances that may affect the test organisms.

(ii) *Test chambers.* (A) Materials and equipment that contact test solutions should be chosen to minimize sorption of test chemicals from the dilution water and should not contain substances that can be leached into aqueous solution in quantities that can affect test results.

(B) For renewal tests, daphnids can be conveniently exposed to the test solution in 250 ml beakers or other suitable containers.

(C) For flow-through tests daphnids can be exposed in glass or stainless steel containers with stainless steel or nylon screen bottoms. Such containers shall be suspended in the test chamber in such a manner to ensure that the test solution flows regularly into and out of the container and that the daphnids are always submerged in at least 5 centimeters of test solution. Test chambers can be constructed using 250 ml beakers or other suitable containers equipped with screened overflow holes, standpipes or V-shaped notches.

(D) Test chambers shall be loosely covered to reduce the loss of test solution or dilution water due to evaporation and to minimize the entry of dust or other particulates into the solutions.

(iii) *Test substance delivery system.* (A) In the flow-through test, proportional diluters, metering pump systems or other suitable systems should be used to deliver the test substance to the test chambers.

(B) The test substance delivery system shall be calibrated before each test. Calibration includes determining the flow rate through each chamber and the concentration of the test substance in each chamber. The general operation of the test substance delivery system should be checked twice daily during a test. The 24-hour flow rate through a test chamber shall be equal to at least five times the volume

of the test chamber. During a test, the flow rates shall not vary more than 10 percent from any one test chamber to another. For the renewal test, test substance dilution water shall be completely replaced at least once every 3 days.

(iv) *Dilution water.* (A) Surface or ground water, reconstituted water, or dechlorinated tap water are acceptable as dilution water if daphnids will survive in it for the duration of the culturing, acclimation, and testing periods without showing signs of stress. The quality of the dilution water should be constant and should meet the following specificiations:

Substance	Maximum concentration
Particulate matter	20 mg/l.
Total organic carbon or	2 mg/l.
Chemical oxygen demand	5 mg/l.
Un-ionized ammonia	20 µg/l.
Residual chlorine	<3 µg/l.
Total organophosphorus pesticides	50 ng/l.
Total organochlorine pesticides plus polychlorinated biphenyls (PCBs).	50 ng/l.
or organic chlorine	25 ng/l.

(B) The water quality characteristics listed above shall be measured at least twice a year or when it is suspected that these characteristics may have changed significantly. If dechlorinated tap water is used, daily chlorine analysis shall be performed.

(C) If the diluent water is from a ground or surface water source, conductivity and total organic carbon (TOC) or chemical oxygen demand (COD) shall be measured. Reconstituted water can be made by adding specific amounts of reagent-grade chemicals to deionized or distilled water. Glass distilled or carbon filtered deionized water with a conductivity of less than 1 microohm/cm is acceptable as the diluent for making reconstituted water.

(D) If the test substance is not soluble in water an appropriate carrier should be used.

(v) *Cleaning of test system.* All test equipment and test chambers shall be cleaned before each use following standard laboratory procedures. Cleaning of test chambers may be necessary during the testing period.

(3) *Test parameters.* (i) Environmental conditions of the water contained in test chambers should be maintained as specified in this paragraph:

(A) The test temperature shall be 20 °C. Excursions from the test temperature shall be no greater than ±2 °C.

(B) Dissolved oxygen concentration between 60 and 105 percent saturation. Aeration, if needed to achieve this level, shall be done before the addition of the test substance. All treatment and control chambers shall be given the same aeration treatment.

(C) Photoperiod of 16-hours light and 8-hours darkness.

(ii) Additional measurements include:

(A) The concentration of the test substance in the chambers shall be measured during the test.

(B) At a minimum, the concentration of test substance should be measured as follows:

(*1*) In each chamber before the test.

(*2*) In each chamber on days 7, 14, and 21 of the test.

(*3*) In at least one appropriate chamber whenever a malfunction is detected in any part of the test substance delivery system. Equal aliquots of test solution may be removed from each replicate chamber and pooled for analysis. Among replicate test chambers of a treatment concentration, the measured concentration of the test substance should not vary more than 20 percent.

(*4*) An apparatus for providing a 16-hour light and 8-hour dark photoperiod.

(C) The dissolved oxygen concentration, temperature and pH shall be measured at the beginning of the test and on days 7, 14, and 21 in at least two chambers of the high, middle, low, and control test concentrations.

(e) *Reporting.* The sponsor shall submit to the U.S. Environmental Protection Agency all data developed by the test that are suggestive or predictive of chronic toxicity and all associated toxicologic manifestations. In addition to the reporting requirements prescribed in the part 792—*Good Laboratory Practice Standards* of this chapter the reporting of test data shall include the following:

(1) The name of the test, sponsor, testing laboratory, study director, principal investigator, and dates of testing.

(2) A detailed description of the test substance including its source, lot number, composition (identity and concentration of major ingredients and major impurities), known physical and chemical properties, and any carriers or other additives used and their concentrations.

(3) The source of the dilution water, its chemical characteristics (e.g., conductivity, hardness, pH), and a description of any pretreatment.

(4) Detailed information about the daphnids used as brood stock, including the scientific name and method of verification, age, source, treatments, feeding history, acclimation procedures, and culture methods. The age of the daphnids used in the test shall be reported.

(5) A description of the test chambers, the volume of solution in the chambers, the way the test was begun (e.g., conditioning, test substance additions), the number of test organisms per test chamber, the number of replicates per treatment, the lighting, the renewal process and schedule for the renewal chronic test, the test substance delivery system and flow rate expressed as volume additions per 24 hours for the flow-through chronic test, and the method of feeding (manual or continuous) and type of food.

(6) The concentration of the test substance in test chambers at times designated for renewal and flow-through tests.

(7) The number and percentage of organisms that show any adverse effect in each test chamber at each observation period.

(8) The cumulative adult and offspring immobilization values and the progeny produced at designated observation times, the time (days) to first brood and the number of offspring per adult in the control replicates and in each treatment replicate.

(9) All chemical analyses of water quality and test substance concentrations, including methods, method validations and reagent blanks.

(10) The data records of the culture, acclimation, and test temperatures.

(11) Any deviation from this test guideline, and anything unusual about the test, (e.g., dilution failure, temperature fluctuations).

(12) The MATC to be reported is calculated as the geometric mean between the lowest measured test substance concentration that had a significant ($p \leq 0.05$) effect and the highest measured test substance concentration that had no significant ($p \leq 0.05$) effect on day 21 of the test. The most sensitive of the test criteria (number of adult animals immobilized, the number of young per female and the number of immobilized young per female) is used to calculate the MATC. The criterion selected for MATC computation is the one which exhibits an effect (a statistically significant difference between treatment and control groups; $p \leq 0.05$) at the lowest test substance concentration for the shortest period of exposure. Appropriate statistical tests (analysis of variance, mean separation test) shall be used to test for significant test substance effects. The statistical tests employed and the results of these tests shall be reported.

(13) Concentration-response curves utilizing the average measured test substance concentration shall be fitted to cumulative adult immobilization data at 21 days. A statistical test of goodness-of-fit shall be performed and the results reported.

(14) An EC_{50} value based on adult immobilization with corresponding 95 percent confidence limits when sufficient data are present for day 21. These calculations shall be made using the average measured concentration of the test substance.

[50 FR 39321, Sept. 27, 1985, as amended at 52 FR 19060, May 20, 1987]

§ 797.1400 Fish acute toxicity test.

(a) *Purpose.* This guideline may be used to develop data on the acute toxicity of chemical substances and mixtures (''chemicals'') subject to environmental effects test regulations under the Toxic Substances Control Act (TSCA) (Pub. L. 94–469, 90 Stat. 2003, 15 U.S.C. 2601 *et seq.*). This guideline prescribes tests to be used to develop data on the acute toxicity of chemicals to fish. The United States Environmental Protection Agency (EPA) will use data from these tests in assessing the hazard of a chemical to the environment.

(b) *Definitions.* The definitions in section 3 of the Toxic Substances Control

Act (TSCA), and the definitions in part 792—*Good Laboratory Practice Standards* of this chapter apply to this test guideline. The following definitions also apply to this guideline:

(1) *Acclimation* means the physiological compensation by test organisms to new environmental conditions (e.g., temperature, hardness, pH).

(2) *Acute toxicity test* means a method used to determine the concentration of a substance that produces a toxic effect on a specified percentage of test organisms in a short period of time (e.g., 96 hours). In this guideline, death is used as the measure of toxicity.

(3) *Carrier* means a solvent used to dissolve a test substance prior to delivery to the test chamber.

(4) *Conditioning* means the exposure of construction materials, test chambers, and testing apparatus to dilution water or to test solutions prior to the start of a test in order to minimize the sorption of the test substance onto the test facilities or the leaching of substances from the test facilities into the dilution water or test solution.

(5) *Death* means the lack of opercular movement by a test fish.

(6) *Flow-through* means a continuous or an intermittent passage of test solution or dilution water through a test chamber, or a holding or acclimation tank with no recycling.

(7) *Incipient* LC_{50} means that test substance concentration, calculated from experimentally-derived mortality data, that is lethal to 50 percent of a test population when exposure to the test substance is continued until the mean increase in mortality does not exceed 10 percent in any concentration over a 24-hour period.

(8) LC_{50} means that test substance concentration, calculated from experimentally-derived mortality data, that is lethal to 50 percent of a test population during continuous exposure over a specified period of time.

(9) *Loading* means the ratio of fish biomass (grams, wet weight) to the volume (liters) of test solution in a test chamber or passing through it in a 24-hour period.

(10) *Static* means the test solution is not renewed during the period of the test.

(11) *Test solution* means the test substance and the dilution water in which the test substance is dissolved or suspended.

(c) *Test procedures*—(1) *Summary of the test.* (i) Test chambers are filled with appropriate volumes of dilution water. If a flow-through test is performed, the flow of dilution water through each chamber is adjusted to the rate desired.

(ii) The test substance is introduced into each test chamber. In a flow-through test, the amount of test substance which is added to the dilution water is adjusted to establish and maintain the desired concentration of test substance in each test chamber.

(iii) Test fish which have been acclimated in accordance with the test design are introduced into the test and control chambers by stratified random assignment.

(iv) Fish in the test and control chambers are observed periodically during the test; dead fish are removed at least twice each day and the findings are recorded.

(v) The dissolved oxygen concentration, pH, temperature and the concentration of test substance are measured at intervals in selected test chambers.

(vi) Concentration-response curves and LC_{50} values for the test substance are developed from the mortality data collected during the test.

(2) [Reserved]

(3) *Range finding test.* If the toxicity of the test substance is not already known, a range finding test should be performed to determine the range of concentrations to be used in the definitive test. The highest concentration of test substance for use in the range finding test should not exceed its solubility in water or the permissible amount of the carrier used.

(4) *Definitive test.* (i) A minimum of 20 fish should be exposed to each of five or more test substance concentrations. The range of concentrations to which the fish are exposed should be such that in 96 hours there are at least two partial mortality exposures bracketing 50 percent survival.

(ii) For exposure to each concentration of a test substance, an equal number of test fish shall be placed in two or more replicate test chambers. Test fish

shall be impartially distributed among test chambers in such a manner that test results show no significant bias from the distributions.

(iii) Every test shall include a control consisting of the same dilution water, conditions, procedures, and fish from the same group used in the test, except that none of the test substance is added.

(iv) Mortality data collected during the test are used to calculate a 96-hour LC_{50}. The 24-, 48-, and 72-hour values should be calculated whenever there is sufficient mortality data to determine such values. If the 96-hour LC_{50} is less than 50 percent of the estimated 48-hour LC_{50} in a flow-through test, the test shall be continued until the mean increase in mortality at any test concentration does not exceed 10 percent over a 24-hour period or until 14 days.

(v) Test fish shall not be fed while they are being exposed to the test substance under static conditions or during the first 96 hours of flow-through testing. If the test continues past 96 hours, the fish should be fed a suitable food at a maintenance level every other day beginning on test day 5. Any excess food and the fecal material should be removed when observed.

(5) *Test results.* (i) Death is the primary criterion used in this test guideline to evaluate the toxicity of the test substance.

(ii) In addition to death, any abnormal behavior such as, but not limited to, erratic swimming, loss of reflex, increased excitability, lethargy, or any changes in appearance or physiology such as discoloration, excessive mucous production, hyperventilation, opaque eyes, curved spine, or hemorrhaging shall be recorded.

(iii) Observations on compound solubility shall be recorded. The investigator shall report the appearance of surface slicks, precipitates, or material adhering to the sides of the test chamber.

(iv) Each test and control chamber shall be checked for dead fish and observations recorded at 24, 48, 72, and 96 hours after the beginning of the test or within one hour of the designated times. If the test is continued past 96 hours, additional observations shall be made every 24 hours until termination.

(v) The mortality data is used to calculate LC_{50}'s and their 95 percent confidence limits, and to plot concentration-response curves for each time interval whenever sufficient data exists. The methods recommended for use in calculating LC_{50}'s include probit, logit, binomial, and moving average angle.

(vi) A test is unacceptable if more than 10 percent of the control fish die or exhibit abnormal behavior during a 96-hour test. If a flow-through test is continued past 96 hours, the maximum allowable additional mortality is 10 percent.

(6) *Analytical measurements*—(i) *Water quality analysis.* (A) The hardness, acidity, alkalinity, pH, conductivity, TOC or COD, and particulate matter of the dilution water should be measured at the beginning of each static test and at the beginning and end of each flow-through test. The month to month variation of the above values should be less than 10 percent and the pH should vary less than 0.4 units.

(B) During static tests, the dissolved oxygen concentration, temperature, and pH shall be measured in each test chamber at the beginning and end of the test. The test solution volume shall not be reduced by more than 10 percent as a result of these measurements.

(C) During flow-through tests, dissolved oxygen, temperature and pH measurements shall be made in each chamber at the beginning and end of the test.

(ii) *Collection of samples for measurement of test substance.* Test solution samples to be analyzed for the test substance should be taken midway between the top, bottom, and sides of the test chamber. These samples should not include any surface scum or material dislodged from the bottom or sides. Samples should be analyzed immediately or handled and stored in a manner which minimizes loss of test substance through microbial degradation, photodegradation, chemical reaction, volatilization, or sorption.

(iii) *Measurement of test substance.* (A) For static tests, the concentration of the test substance shall be measured at a minimum in each test chamber at each test concentration at the beginning (0-hour, before fish are added) and at the end of the test. During flow-

through tests, the concentration of test substance shall be measured as follows:

(*1*) In at least the chamber of each test concentration at 0-hour.

(*2*) In at least the chamber of each test concentration at 96-hours and every 4 days thereafter, as long as the test is continued.

(*3*) In at least one appropriate chamber whenever a malfunction is detected in any part of the test substance delivery system.

(*4*) Equal aliquots of test solution may be removed from each replicate chamber and pooled for analysis.

(B) Filters and their holders used for determining the dissolved test substance concentrations should be prewashed with several volumes of distilled water and undergo a final rinse with test solution. Glass or stainless steel filter holders are best for organic test substances, while plastic holders are best for metals. The sample should be filtered within 30 minutes after it is taken from the test chamber.

(C) The analytical methods used to measure the amount of test substance in a sample shall be validated before beginning the test. The accuracy of a method should be verified by a method such as using known additions. This involves adding a known amount of the test substance to three water samples taken from a chamber containing dilution water and the same number and species of fish as are used in the test. The nominal concentration of the test substance in those samples should span the concentration range to be used in the test.

(D) An analytical method is not acceptable if likely degradation products of the test substance give positive or negative interferences, unless it is shown that such degradation products are not present in the test chambers during the test.

(E) In addition to analyzing samples of test solution, at least one reagent blank, containing all reagents used, should also be analyzed.

(F) If the measured concentrations of dissolved test substance are considerably lower (e.g., <50 percent) than the nominal concentrations, the total test substance concentration should be measured in the highest test concentration.

(G) Among replicate test chambers, the measured concentrations shall not vary more than 20 percent. The measured concentration of the test substance in any chamber during the test should not vary more than 30 percent from the measured concentration at time 0.

(H) The mean measured concentration of test substance shall be used to calculate all LC_{60}'s and to plot all concentration-response curves.

(d) *Test conditions*—(1) *Test species*—(i) *Selection.* The test species for this test are the rainbow trout (*Salmo gairdneri*), bluegill (*Lepomis macrochirus*) and fathead minnow (*Pimephales promelas*). The particular species of fish to be used will be prescribed in the test rule.

(ii) *Age and condition of fish.* (A) Juvenile fish shall be used. Fish used in a particular test shall be the same age and be of normal size and appearance for their age. The longest fish shall not be more than twice the length of the shortest.

(B) All newly acquired fish should be quarantined and observed for at least 14 days prior to use in a test.

(C) Fish shall not be used for a test if they appear stressed or if more than five percent die during the 48 hours immediately prior to the test.

(iii) *Acclimation of test fish.* (A) If the holding water is not from the same source as the test dilution water, acclimation to the dilution water should be done gradually over a 48-hour period. The fish should then be held an additional 14 days in the dilution water prior to testing. Any changes in water temperature should not exceed 3 °C per day. Fish should be held for a minimum of 7 days at the test temperature prior to testing.

(B) During the final 48-hours of acclimation, fish should be maintained in facilities with background colors and light intensities similar to those of the testing area and should not be fed.

(2) *Facilities*—(i) *General.* Facilities needed to perform this test include:

(A) Flow-through tanks for holding and acclimating fish.

(B) A mechanism for controlling and maintaining the water temperature

during the holding, acclimation and test periods.

(C) Apparatus for straining particulate matter, removing gas bubbles, or insufficient dissolved oxygen, respectively.

(D) Apparatus for providing a 16-hour light and 8-hour dark photoperiod with a 15- to 30-minute transition period.

(E) Chambers for exposing test fish to the test substance.

(F) A test substance delivery system for flow-through tests.

(ii) *Construction materials.* Construction materials and commercially purchased equipment that may contact the stock solution, test solution, or dilution water should not contain substances that can be leached or dissolved into aqueous solutions in quantities that can alter the test results. Materials and equipment that contact stock or test solutions should be chosen to minimize sorption of test chemicals. Glass, stainless steel, and perfluorocarbon plastic should be used whenever possible. Concrete, fiberglass, or plastic (e.g., PVC) may be used for holding tanks, acclimation tanks, and water supply systems, but they should be used to remove rust particles. Rubber, copper, brass, galvanized metal, epoxy glues, and lead should not come in contact with the dilution water, stock solution, or test solution.

(iii) *Test substance delivery system.* In flow-through tests, diluters, metering pump systems, or other suitable devices should be used to deliver the test substance to the test chambers. The system used should be calibrated before each test. Calibration includes determining the flow rate through each chamber and the concentration of the test substance delivered to each chamber. The general operation of the test substance delivery system should be checked twice daily during a test. The 24-hour flow rate through a test chamber should be a minimum of 6 tank volumes. During a test, the flow rates should not vary more than 10 percent from one test chamber to another.

(iv) *Test chambers.* Test chambers made of stainless steel should be welded, not soldered. Test chambers made of glass should be fused or bonded using clear silicone adhesive. As little adhesive as possible should be left exposed in the interior of the chamber.

(v) *Cleaning of test system.* Test substance delivery systems and test chambers should be cleaned before each test. They should be washed with detergent and then rinsed in sequence with clean water, pesticide-free acetone, clean water, and 5 percent nitric acid, followed by two or more changes of dilution water.

(vi) *Dilution water.* (A) Clean surface or ground water reconstituted water, or dechlorinated tap water is acceptable as dilution water if the test fish will survive in it for the duration of the holding, acclimating, and testing periods without showing signs of stress, such as discoloration, hemorrhaging, disorientation or other unusual behavior. The quality of the dilution water should be constant and should meet the following specifications measured at least twice a year:

Substance	Maximum
Particulate matter	20 mg/liter.
Total organic carbon or	2 mg/liter.
chemical oxygen demand	5 mg/liter.
Un-ionized ammonia	1 µg/liter.
Residual chlorine	1 µg/liter.
Total organochloring pesticides	50 µg/liter.
Total organocholorine pesticides plus polychlorinated biphenyls (PCBs).	50 µg/liter.
or organic chlorine	25 µg/liter.

(B) The concentration of dissolved oxygen in the dilution water should be between 90 and 100 percent saturation; 9.8 to 10.9 mg/l for tests with trout, and 8.0 to 8.9 mg/l for tests with bluegill or fathead minnow at sea level. If necessary, the dilution water can be aerated before the addition of the test substance. All reconstituted water should be aerated before use. Buffered soft water should be aerated before but not after the addition of buffers.

(C) If disease organisms are present in the dilution water in sufficient numbers to cause infection, they should be killed or removed by suitable equipment.

(D) Glass distilled or carbon filtered deionized water with a conductivity less than 1 micromho/cm is acceptable for use in making reconstituted water. If the reconstituted water is prepared from a ground or surface water source, conductivity, and total organic carbon (TOC) or chemical oxygen demand

(COD) should be measured on each batch.

(vii) *Carriers.* (A) Distilled water should be used in making stock solutions of the test substance. If the stock volume however is more than 10 percent of the test solution volume, dilution water should be used. If a carrier is absolutely necessary to dissolve the test substance, the volume used should not exceed the minimum volume necessary to dissolve or suspend the test substance in the test solution. If the test substance is a mixture, formulation, or commercial product, none of the ingredients is considered a carrier unless an extra amount is used to prepare the stock solution.

(B) Triethylene glycol and dimethyl formamide are the prefered carriers, but acetone may also be used. The concentration of triethylene glycol in the test solution should not exceed 80 mg/1. The concentration of dimethyl formamide or acetone in the test solution should not exceed 5.0 mg/1.

(3) *Test parameters*—(i) *Loading.* The number of fish placed in a test chamber should not be so great as to affect the results of the test. The loading should not be so great that the test substance concentrations are decreased by more than 20 percent due to uptake by the fish. In static tests, loading should not exceed 0.5 grams of fish per liter of solution in the test chamber at any one time. In flow-through tests loading should not exceed 0.5 grams of fish per liter of test solution passing through the chamber in 24 hours. These loading rates should be sufficient to maintain the dissolved oxygen concentration above the recommended levels and the ammonia concentration below 20 µg/l.

(ii) *Dissolved oxygen concentration.* (A) During static tests with rainbow trout the dissolved oxygen in each test chamber shall be greater than 5.5 mg/1. In tests with bluegill and fathead minnows, the DO shall be maintained above 4.5 mg/1.

(B) During flow-through tests the dissolved oxygen concentration shall be maintained above 8.2 mg/1 in tests with trout and above 6.6 mg/l in tests with bluegills or fathead minnows.

(iii) *Temperature.* The test temperature shall be 22 °C for bluegill and fathead minnow and 12 °C for rainbow trout. Excursions from the test temperature shall be no greater than ±2 °C. The temperature shall be measured at least hourly in one test chamber.

(iv) *Light.* A 16-hour light and 8-hour dark photoperiod should be maintained.

(e) *Reporting.* The sponsor shall submit to the EPA all data developed by the test that are suggestive or predictive of toxicity. In addition to the reporting requirements prescribed in part 792—*Good Laboratory Practice Standards* of this chapter, the reported test data shall include the following:

(1) The source of the dilution water, a description of any pretreatment, and the measured hardness, acidity, alkalinity, pH, conductivity, TOC or COD and particulate matter.

(2) A description of the test chambers, the depth and volume of solution in the chamber, the specific way the test was begun (e.g., conditioning, test substance additions), and for flow-through tests, a description of the test substance delivery system.

(3) Detailed information about the test fish, including the scientific name and method of verification, average weight (grams, wet weight), standard length, age, source, history, observed diseases, treatments, and mortalities, acclimation procedures, and food used.

(4) The number of replicates used, the number of organisms per replicate, the loading rate, and the flow rate for flow-through tests.

(5) The measured DO, pH and temperature and the lighting regime.

(6) The solvent used, the test substance concentration in the stock solution, the highest solvent concentration in the test solution and a description of the solubility determinations in water and solvents if used.

(7) The concentrations of the test substance at each test concentration just before the start of the test and at all subsequent sampling periods.

(8) The number of dead and live tests organisms, the percentage of organisms that died, and the number that showed any abnormal effects in the control and in each test chamber at each observation period.

(9) The 96-hour LC_{50}, and when sufficient data have been generated, the 24–, 48–, 72–, and incipient LC_{50} values,

their 95 percent confidence limits, and the methods used to calculate the LC_{50} values and their confidence limits.

(10) When observed, the observed no effect concentration (the highest concentration tested at which there were no mortalities or abnormal behavioral or physiological effects).

(11) The concentration-response curve at each observation period for which a LC_{50} was calculated.

(12) Methods and data records of all chemical analyses of water quality parameters and test substance concentrations, including method validations and reagent blanks.

[50 FR 39321, Sept. 27, 1985, as amended at 52 FR 19062, May 20, 1987; 54 FR 29715, July 14, 1989; 54 FR 33148, Aug. 11, 1989]

§ 797.1600 Fish early life stage toxicity test.

(a) *Purpose.* This guideline is intended to be used for assessing the propensity of chemical substances to produce adverse effects to fish during the early stages of their growth and development. This guideline describes the conditions and procedures for the continuous exposure of several representative species to a chemical substance during egg, fry and early juvenile life stages. The Environmental Protection Agency (EPA) will use data from this test in assessing the potential hazard of the test substance to the aquatic environment.

(b) *Definitions.* The definitions in section 3 of the Toxic Substances Control Act (TSCA) and the definitions in part 792—*Good Laboratory Practice Standards,* apply to this section. In addition, the following definitions are applicable to this specific test guideline:

(1) ''Acclimation'' physiological or behavioral adaptation of organisms to one or more environmental conditions associated with the test method (e.g., temperature, hardness, pH).

(2) ''Carrier'' solvent or other agent used to dissolve or improve the solubility of the test substance in dilution water.

(3) ''Conditioning'' exposure of construction materials, test chambers, and testing apparatus to dilution water or to the test solution prior to the start of the test in order to minimize the sorption of test substance onto the test facilities or the leachig of substances from test facilities into the dilution water or the test solution.

(4) ''Control'' an exposure of test organisms to dilution water only or dilution water containing the test solvent or carrier (no toxic agent is intentionally or inadvertently added).

(5) ''Dilution water'' the water used to produce the flow-through conditions of the test to which the test substance is added and to which the test species is exposed.

(6) ''Early life stage toxicity test'' a test to determine the minimum concentration of a substance which produces a statistically significant observable effect on hatching, survival, development and/or growth of a fish species continuously exposed during the period of their early development.

(7) ''Embryo cup'' a small glass jar or similar container with a screened bottom in which the embryos of some species (i.e., minnow) are placed during the incubation period and which is normally oscillated to ensure a flow of water through the cup.

(8) ''Flow through'' refers to the continuous or very frequent passage of fresh test solution through a test chamber with no recycling.

(9) ''Hardness'' the total concentration of the calcium and magnesium ions in water expressed as calcium carbonate (mg $CaCO_3$/liter).

(10) ''Loading'' the ratio of biomass (grams of fish, wet weight) to the volume (liters) of test solution passing through the test chamber during a specific interval (normally a 24-hr. period).

(11) ''No observed effect concentration (NOEC)'' the highest tested concentration in an acceptable early life stage test: (i) which did not cause the occurrence of any specified adverse effect (statistically different from the control at the 95 percent level); and (ii) below which no tested concentration caused such an occurrence.

(12) ''Observed effect concentration (OEC)'' the lowest tested concentration in an acceptable early life stage test: (i) Which caused the occurrence of any specified adverse effect (statistically different from the control at the 95 percent level); and (ii) above which all

tested concentrations caused such an occurrence.

(13) ''Replicate'' two or more duplicate tests, samples, organisms, concentrations, or exposure chambers.

(14) ''Stock solution'' the source of the test solution prepared by dissolving the test substance in dilution water or a carrier which is then added to dilution water at a specified, selected concentration by means of the test substance delivery system.

(15) ''Test chamber'' the individual containers in which test organisms are maintained during exposure to test solution.

(16) ''Test solution'' dilution water with a test substance dissolved or suspended in it.

(17) ''Test substance'' the specific form of a chemical substance or mixture that is used to develop data.

(c) *Test Procedures*—(1) *Summary of test.* (i) The early life stage toxicity test with fish involves exposure of newly fertilized embryos to various concentrations of a test substance. Exposure continues for 28 days post hatch for the minnows and 60 days post hatch for the trout species. During this time various observations and measurements are made in a specific manner and schedule in order to determine the lowest effect and highest no-effect concentrations of the test substance.

(ii) A minimum of five exposure (treatment) concentrations of a test substance and one control are required to conduct an early life stage toxicity test. The concentration of the test substance in each treatment is usually 50 percent of that in the next higher treatment level.

(iii) For each exposure concentration of the test substance and for each control (i.e., regular control and carrier control is required) there shall be:

(A) At least two replicate test chambers, each containing one or more embryo incubation trays or cups; and there shall be no water connections between the replicate test chambers;

(B) At least 60 embryos divided equally in such a manner that test results show no significant bias from the distributions, between the embryo incubation trays or cups for each test concentration and control (i.e., 30 per embryo cup with 2 replicates);

(C) All surviving larvae divided equally between the test chambers for each test concentration and control (e.g., 30 larvae per test chamber with 2 replicates).

(iv) *Duration.* (A) For fathead minnow and sheepshead minnow a test begins when the newly fertilized minnow embryos (less than 48-hours old) are placed in the embryo cups and are exposed to the test solution concentrations. The test terminates following 28 days of post-hatch exposure, i.e., 28 days after the newly hatched fry are transferred from the embryo cups into the test chambers.

(B) For brook trout and rainbow trout a test begins when newly fertilized trout embryos (less than 96-hours old) are placed in the embryo trays or cups and are exposed to the test solution concentrations. The test terminates following 60 days of post-hatch exposure (for an approximate total exposure period of 90 days).

(C) For silverside a test begins with newly fertilized embryos (less than or equal to 48 hours old) and is terminated 28 days after hatching. The chorionic fibrils should be cut before randomly placing the embryos in the egg incubation cups.

(2) [Reserved]

(3) *Range-finding test.* (i) A range finding test is normally performed with the test substance to determine the test concentrations to be used in the early life stage toxicity test, especially when the toxicity is unknown. It is recommended that the test substance concentrations be selected based on information gained from a 4- to 10-day flow-through toxicity test with juveniles of the selected test species.

(ii) The highest concentration selected for the early life stage toxicity test should approximate the lowest concentration indicated in any previous testing to cause a significant reduction in survival. The range of concentrations selected is expected to include both observed effect and no-observed effect levels. The dilution factor between concentrations is normally 0.50, however, other dilution factors may be used as necessary.

(4) *Definitive test*—(i) *General.* (A) A test shall not be initiated until after the test conditions have been met and

the test substance delivery system has been observed functioning properly for 48-hours. This includes temperature stability, flow requirements of dilution water, lighting requirements, and the function of strainers and air traps included in the water-supply system, and other conditions as specified previously.

(B) New holding and test facilities should be tested with sensitive organisms (i.e., juvenile test species or daphnids) before use to assure that the facilities or substances possibly leaching from the equipment will not adversely affect the test organisms during an actual test.

(C) Embryos should be acclimated for as long as practical to the test temperature and dilution water prior to the initiation of the test.

(D) When embryos are received from an outside culture source (i.e., rainbow and brook trout) at a temperature at variance with the recommended test temperature they shall be acclimated to the test temperature. When eggs are received, they should be immediately unpacked and the temperature of the surrounding water determined. Sudden temperature changes should be avoided. Acclimation to the appropriate test temperature should be accomplished within a period of 6 hours, and should incorporate the use of dilution water.

(E) Embryos should be visually inspected prior to placement in the embryo cups or screen trays. All dead embryos shall be discarded. Dead embryos can be discerned by a change in coloration from that of living embryos (e.g., trout embryos turn white when dead). During visual inspection, empty shells, opaque embryos, and embryos with fungus or partial shells attached shall be removed and discarded. If less than 50 percent of the eggs to be used appear to be healthy, all embryos in such a lot shall be discarded.

(ii) *Embryo incubation procedures.* (A) Embryos can be distributed to the embryo cups or screen trays using a pipette with a large bore or a similar apparatus. Newly-hatched silverside fry are very sensitive to handling; the egg incubation cups should not be handled at all the first 5 days after hatching begins. Just before hatching is expected to begin, the embryos should be transferred to clean incubation cups. Trout embryos can be distributed by using a small container which has been precalibrated to determine the approximate number of embryos it can hold; embryos are measured volumetrically in this manner, and are then poured onto the screen tray (or embryo cup). Trout embryos should be separated on the screen tray so that they are not in contact with each other. A final count will ensure the actual number on the screen tray. After random assignment, the screen trays or embryo cups are placed in the test chambers.

(B) Each day until hatch the embryos are visually examined. Minnow embryos may be examined with the aid of a magnifying viewer. Trout embryos should not be touched. Trout embryos should be maintained in low intensity light or in darkness until 1-week post hatch, and are usually examined with the aid of a flashlight or under low intensity light. Dead embryos should be removed and discarded. Any embryos which are heavily infected with fungus shall be discarded and shall be subtracted from the initial number of embryos used as a basis for the calculations of percentage hatch.

(C) When embryos begin to hatch they should not be handled.

(iii) *Initiation of fry exposure.* (A) Forty-eight hours after the first hatch in each treatment level, or when hatching is completed, the live young fish shall be counted and transferred from each embryo cup into the appropriate test chamber. For silverside, all surviving fry are not counted until six days after hatching and are not transferred to embryo cups. All of the normal and abnormal fry shall be gently released into the test chamber by allowing the fry to swim out of each embryo cup; nets shall not be used. The trout embryos incubated on screen trays will hatch out in the test chambers, therefore handling of fish is not necessary.

(B) If necessary, fry can be transferred from one replicate embryo cup to the other replicate within a test concentration to achieve equal numbers in each replicate chamber.

(C) The number of live fry, live normal fry, live embryos, dead embryos and unaccounted for embryos for each

cup shall be recorded when hatching is deemed complete. Those fry which are visibly (without the use of a dissecting scope or magnifying viewer) lethargic or grossly abnormal (either in swimming behavior or physical appearance) shall be counted. Late hatching embryos shall be left in the embryo cups to determine if they will eventually hatch or not. The range of time-to-hatch (to the nearest day) for each cup shall be recorded.

(iv) *Time to first feeding.* (A) The first feeding for the fathead and sheepshead minnow fry shall begin shortly after transfer of the fry from the embryo cups to the test chambers. Silversides are fed the first day after hatch. Trout species initiate feeding at swim-up. The trout fry shall be fed trout starter mash three times a day *ad libitum,* with excess food siphoned off daily. The minnow fry shall be fed live newly-hatched brine shrimp nauplii (*Artemia salina*) at least three times a day.

(B) For the first seven days, feeding shall be done at minimum intervals of four hours (i.e., 8 am, 12 noon, and 4 pm); thereafter the fry shall be fed as indicated below.

(v) *Feeding.* (A) The fathead and sheepshead minnow fry shall be fed newly hatched brine shrimp nauplii for the duration of the test at approximately 4-hour intervals three times a day during the week and twice on the weekend after the first week. Trout fry shall be fed at similar intervals and may receive live brine shrimp nauplii in addition to the trout starter food after the first week. Between days 1 and 8 after first hatching, silverside fry are fed the rotifer, *Brachionus plicatilis,* three times daily at a concentration of 5,000 to 10,000 organisms per egg cup (based on 15 fish/cup). From days 9 to 11, the fry shall be fed approximately 2,500 newly hatched brine shrimp (*Artemia*) nauplii and 5,000 to 10,000 rotifers twice daily. For the remainder of the test, the fish will be fed brine shrimp exclusively. The number of organisms used should be gradually increased to approximately 5,000 nauplii by test day 28.

(B) An identical amount of food should be provided to each chamber. Fish should be fed *ad libitum* for 30 minutes with excess food siphoned off the bottom once daily if necessary.

(C) Fish should not be fed for the last 24 hours prior to termination of the test.

(vi) *Carriers.* Water should be used in making up the test stock solutions. If carriers other than water are absolutely necessary, the amount used should be the minimum necessary to achieve solution of the test substance. Triethylene glycol and dimethyl formamide are preferred, but ethanol and acetone can be used if necessary. Carrier concentrations selected should be kept constant at all treatment levels.

(vii) *Controls.* Every test requires a control that consists of the same dilution water, conditions, procedures, and test organisms from the same group used in the other test chambers, except that none of the test substance is added. If a carrier (solvent) is used, a separate carrier control is required in addition to the regular control. The carrier control shall be identical to the regular control except that the highest amount of carrier present in any treatment is added to this control. If the test substance is a mixture, formulation, or commercial product, none of the ingredients is considered a carrier unless an extra amount is used to prepare the stock solution.

(viii) *Randomization.* The location of all test chambers within the test system shall be randomized. A representative sample of the test embryos should be impartially distributed by adding to each cup or screen tray no more than 20 percent of the number of embryos to be placed in each cup or screen tray and repeating the process until each cup or screen tray contains the specified number of embryos. Alternatively, the embryos can be assigned by random assignment of a small group (e.g., 1 to 5) of embryos to each embryo cup or screen tray, followed by random assignment of a second group of equal number to each cup or tray, which is continued until the appropriate number of embryos are contained in each embryo cup or screen tray. The method of randomization used shall be reported.

(ix) *Observations.* During the embryo exposure period observations shall be made to check for mortality. During

the exposure period of the fry, observations shall be made to check for mortality and to note the physical appearance and behavior of the young fish. The biological responses are used in combination with physical and chemical data in evaluating the overall lethal and sublethal effects of the test substance. Additional information on the specific methodology for the data obtained during the test procedure are discussed in the following sections.

(x) *Biological data.* (A) Death of embryos shall be recorded daily.

(B) When hatching commences, daily records of the number of embryos remaining in each embryo cup are required. This information is necessary to quantify the hatching success. A record of all deformed larvae shall be kept throughout the entire post-hatch exposure. Time to swim-up shall be recorded for the trout. Upon transfer of fry from the embryo cups to the test chambers, daily counts of the number of live fish should be made. At a minimum, live fish shall be counted on days 4, 11, 18, 25 and (weekly thereafter for the trout species) finally on termination of the test.

(C) The criteria for death of young fish is usually immobility, especially absence of respiratory movement, and lack of reaction to gentle prodding. Deaths should be recorded daily and dead fish removed when discovered.

(D) Daily and at termination of the test, the number of fish that appear (without the use of a magnifying viewer) to be abnormal in behavior (e.g., swimming erratic or uncoordinated, obviously lethargic, hyperventilating, or over excited, etc.) or in physical appearance (e.g., hemorrhaging, producing excessive mucous, or are discolored, deformed, etc.) shall be recorded and reported in detail.

(E) All physical abnormalities (e.g., stunted bodies, scoliosis, etc.) shall be photographed and the deformed fish which die, or are sacrificed at the termination of the test, shall be preserved for possible future pathological examination.

(F) At termination, all surviving fish shall be measured for growth. Standard length measurements should be made directly with a caliper, but may be measured photographically. Measurements shall be made to the nearest millimeter (0.1 mm is desirable). Weight measurements shall also be made for each fish alive at termination (wet, blotted dry, and to the nearest 0.01 g for the minnows and 0.1 g for the trout). If the fish exposed to the toxicant appear to be edematous compared to control fish, determination of dry, rather than wet, weight is recommended.

(G) Special physiological, biochemical and histological investigations on embryos, fry, and juveniles may be deemed appropriate and shall be performed on a case by case basis.

(5) *Test results.* (i) Data from toxicity tests are usually either continuous (e.g. length or weight measurements) or dichotomous (e.g. number hatching or surviving) in nature. Several methods are available and acceptable for statistical analysis of data derived from early life stage toxicity tests; however, the actual statistical methodology to analyze and interpret the test results shall be reported in detail.

(ii) The significance level for all statistical testing shall be a minimum of $P=0.05$ (95 percent confidence level).

(A) *Example of statistical analysis.* (*1*) Mortality data for the embryonic stage, fry stage and for both stages in replicate exposure chambers should first be analyzed using a two-way analysis of variance (ANOVA) with interaction model. This analysis will determine if replicates are significantly different from each other. If a significant difference between replicates or a significant interaction exists, cause for the difference should be determined. Modification should then be made in the test apparatus or in handling procedures for future toxicity tests. Further calculations should incorporate the separation of replicates. If no significant difference is observed, replicates may be pooled in further analyses.

(*2*) After consideration of replicate responses, mortality data should then be subjected to one-way ANOVA. The purpose of this analysis is to determine if a significant difference exists in the percentage mortality between control fish and those exposed to the test material.

(*3*) If the one-way ANOVA results in a F ratio that is significant, it would be acceptable to perform t-tests on the control versus each concentration. A second technique is to identify treatment means that are significantly different; this method should involve the additional assumption that the true mean response decreases generally with increasing concentration. The researcher may also be interested in determining significant differences between concentrations.

(*4*) Growth data should also be analyzed by one-way ANOVA with the inclusion of a covariate to account for possible differences in growth of surviving fry in embryo cup(s) that contain fewer individuals. This condition can occur in cases when the same amount of food is given to each test chamber regardless of the number of survivors.

(B) *Test data to be analyzed.* Data to be statistically analyzed are:

(*1*) Percentage of healthy, fertile embryos at 40–48 hours after initiation of the test. Percentage is based upon initial number used.

(*2*) Percentage of embryos that produce live fry for release into test chambers. Percentage is based on number of embryos remaining after thinning.

(*3*) Percentage of embryos that produce live, normal fry for release into test chambers. Percentage is based upon number of embryos remaining after thinning.

(*4*) Percentage of fry survival at swim-up for trout. Percentage is based upon number of embryos remaining after thinning.

(*5*) Percentage of embryos that produce live fish at end of test. Percentage is based upon number of embryos remaining after thinning.

(*6*) Percentage of embryos that produce live, normal fish at end of test. Percentage is based upon number of embryos remaining after thinning.

(*7*) Weights and lengths of individual fish alive at the end of the test.

(C) It is important that fish length and weight measurements be associated with individual test chambers since the density of the fish and available food should be considered in the growth of the organism.

(iii) *Acceptability criteria.* (A) An early life stage toxicity test is not acceptable unless at least one of the following criteria is significantly different (p=0.05) from control organisms when compared with treated organisms, and the responses are concentration-dependent: mortality of embryos, hatching success, mortality of fry (at swim-up for trout), total mortality throughout the test, and growth (i.e. weight). If no significant effects occur, but the concentrations tested were the highest possible due to solubility or other physio-chemical limitations, the data will be considered for acceptance.

(B) In addition to obtaining significant effects on the exposed test species, a measure of acceptability in the response of control fish is also required.

(C) A test is not acceptable if the average survival of the control fish at the end of the test is less than 80 percent or if survival in any one control chamber is less than 70 percent. For silversides, a test is not acceptable if the average overall survival of the control embryos and fish at the end of the test is less than 60 percent.

(D) If a carrier is used, the criteria for effect (mortality of embryos and fry, growth, etc.) used in the comparison of control and exposed test organisms shall also be applied to the control and control with carrier chambers. For the test to be considered acceptable, no significant difference shall exist between these criteria.

(E) A test is not acceptable if the relative standard deviation (RSD=100 times the standard deviation divided by the mean) of the weights of the fish that were alive at the end of the test in any control test chamber is greater than 40 percent.

(6) *Analytical measurements*—(i) *Analysis of water quality.* Measurement of certain dilution water quality parameters shall be performed every 6 months, to determine the consistency of the dilution water quality. In addition, if data in 30-day increments are not available to show that freshwater dilution water is constant, measurements of hardness, alkalinity, pH, acidity, conductivity, TOC or COD and particulate matter should be conducted once a week in the highest test substance concentration. Measurement of

calcium, magnesium, sodium, potassium, chloride, and sulfate is desirable.

(ii) *Dissolved oxygen measurement.* The dissolved oxygen concentration shall be measured in each test chamber at the beginning of the test and at least once weekly thereafter (as long as live organisms are present) in two replicates of the control and the high, medium, and low test substance concentrations.

(iii) *Temperature measurement.* Temperatures shall be recorded in all test chambers at the beginning of the test, once weekly thereafter and at least hourly in one test chamber. When possible, the hourly measurement shall be alternated between test chambers and between replicates.

(iv) *Test substance measurement.* (A) Prior to the addition of the test substance to the dilution water, it is recommended that the test substance stock solution be analyzed to verify the concentration. After addition of the test substance, the concentration of test substance should be measured at the beginning of the test in each test concentration and control(s), and at least once a week thereafter. Equal aliquots of test solution may be removed from each replicate chamber and pooled for analysis. If a malfunction in the delivery system is discovered, water samples shall be taken from the affected test chambers immediately and analyzed.

(B) The measured concentration of test substance in any chamber should be no more than 30 percent higher or lower than the concentration calculated from the composition of the stock solution and the calibration of the test substance delivery system. If the difference is more than 30 percent, the concentration of test substance in the solution flowing into the exposure chamber (influent) should be analyzed. These results will indicate whether the problem is in the stock solution, the test substance delivery system or in the test chamber. Measurement of degradation products of the test substance is recommended if a reduction of the test substance concentration occurs in the test chamber.

(v) *Sampling and analysis methodology.* (A) Generally, total test substance measurements are sufficient; however, the chemical characteristics of the test substance may require both dissolved and suspended test substance measurements.

(B) For measurement of the test substance, water samples shall be taken midway between the top, bottom, and sides of the test chamber and should not include any surface scum or material stirred up from the bottom or sides. Samples of test solutions shall be handled and stored appropriately to minimize loss of test substance by microbial degradation, photodegradation, chemical reaction, volatilization, or sorption.

(C) Chemical and physical analyses shall be performed using standardized methods whenever possible. The analytical method used to measure the concentration of the test substance in the test solution shall be validated before the beginning of the test. At a minimum, a measure of the accuracy of the method should be obtained on each of two separate days by using the method of known additions, and using dilution water from a tank containing test organisms. Three samples should be analyzed at the next-to-lowest test substance concentration. It is also desirable to study the accuracy and precision of the analytical method for test guideline determination by use of reference (split) samples, or interlaboratory studies, and by comparison with alternative, reference, or corroborative methods of analysis.

(D) An analytical method is not acceptable if likely degradation products of the test substance, such as hydrolysis and oxidation products, give positive or negative interferences, unless it is shown that such degradation products are not present in the test chambers during the test. In general, atomic absorption spectrophotometric methods for metals and gas chromatographic methods for organic compounds are preferable to colorimetric methods.

(E) In addition to analyzing samples of test solution, at least one reagent blank also should be analyzed when a reagent is used in the analysis. Also, at least one sample for the method of known additions should be prepared by adding test substance at the concentration used in the toxicity test.

(d) *Test conditions*—(1) *Test species.* (i) One or more of the recommended test species will be specified in rules under part 799 of this chapter requiring testing of specific chemicals. The recommended test species are:

(A) Fathead minnow (*Pimephales promelas* Rafinesque).

(B) Sheepshead minnow (*Cyprinodon variegatus*).

(C) Brook trout (*Salvelinus fontinalis*).

(D) Rainbow trout (*Salmo gairdneri*).

(E) Atlantic silverside (*Menidia menidia*).

(F) Tidewater silverside (*Menidia peninsulae*).

(ii) Embryos used to initiate the early life stage test shall be less than 48 hours old for the fathead and sheepshead minnows, silversides, and less than 96 hours old for the brook trout and rainbow trout. In addition, the following requirements shall be met:

(A) All embryos used in the test shall be from the same source. Embryos shall be obtained from a stock cultured in-house when possible, and maintained under the same parameters as specified for the test conditions. When it is necessary to obtain embryos from an external source, caution should be exercised to ensure embryo viability and to minimize the possibility of fungal growth. A description of the brood stock history or embryo source shall be made available to EPA upon request.

(B) Test species shall be cared for and handled properly in order to avoid unnecessary stress. To maintain test species in good condition and to maximize growth, crowding shall be prevented, and the dissolved oxygen level shall be maintained near saturation.

(C) Embryos and fish shall be handled as little as possible. Embryos shall be counted and periodically inspected until hatching begins. When larvae begin to hatch, they shall not be handled. Transfer of minnow larvae from embryo cups to test chambers shall not involve the use of nets. No handling is necessary following introduction into the test chambers until termination of the test.

(D) If fathead minnow embryos are obtained from in-house culture units, the embryos should be gently removed from the spawning substrate. The method for separating the fertilized eggs from the substrate is important and can affect the viability of the embryos; therefore the finger-rolling procedure is recommended.

(E) Disease treatment. Chemical treatments to cure or prevent diseases should not be used before, and should not be used during a test. All prior treatments of brood stock should be reported in detail. Severely diseased organisms should be destroyed.

(2) *Test facilities*—(i) *Construction materials.* Construction materials and equipment that contact stock solutions, test solutions, or dilution water into which test embryos or fish are placed should not contain any substances that can be leached or dissolved into aqueous solutions in quantities that can affect test results. Materials and equipment that contact stock or test solutions should be chosen to minimize sorption of test chemicals from dilution water. Glass, #316 stainless steel, nylon screen and perfluorocarbon plastic (e.g., Teflon#) are acceptable materials. Concrete or rigid (unplasticized) plastic may be used for holding and acclimation tanks, and for water supply systems, but they should be thoroughly conditioned before use. If cast iron pipe is used in freshwater supply systems, colloidal iron may leach into the dilution water and strainers should be used to remove rust particles. Natural rubber, copper, brass, galvanized metal, epoxy glues, and flexible tubing should not come in contact with dilution water, stock solutions, or test solutions.

(ii) *Test chambers* (exposure chambers). (A) Stainless steel test chambers should be welded or glued with silicone adhesive, and not soldered. Glass should be fused or bonded using clear silicone adhesive. Epoxy glues are not recommended, but if used ample curing time should be allowed prior to use. As little adhesive as possible should be in contact with the water.

(B) Many different sizes of test chambers have been used successfully. The size, shape and depth of the test chamber is acceptable if the specified flow rate and loading requirements can be achieved.

(C) The actual arrangement of the test chambers can be important to the statistical analysis of the test data.

Test chambers can be arranged totally on one level (tier) side by side, or on two levels with each level having one of the replicate test substance concentrations or controls. Regardless of the arrangement, it shall be reported in detail and considered in the data analysis.

(iii) *Embryo incubation apparatus.* (A) Recommended embryo incubation apparatus include embryo cups for the minnow species and screen trays for the trout species, although embryo cups can be used for the trout species. Embryo cups are normally constructed from approximately 4–5 cm inside diameter, 7–8 cm high, glass jars with the end cut off or similar sized sections of polyethylene tubing. One end of the jar or tubing is covered with stainless steel or nylon screen (approximately 40 meshes per inch is recommended). Embryo cups for silversides are normally constructed by using silicone adhesive to glue a 10-cm high, 363-um nylon mesh tube inside a 9-cm I.D. glass Petri dish bottom. The embryo cups shall be appropriately labeled and then suspended in the test chamber in such a manner as to ensure that the test solution regularly flows through the cup and that the embryos are always submerged but are not agitated too vigorously. Cups may be oscillated by a rocker arm apparatus with a low rpm motor (e.g., 2 rpm) to maintain the required flow of test water. The vertical-travel distance of the rocker arm apparatus during oscillation is normally 2.5–4.0 cm. The water level in the test chambers may also be varied by means of a self-starting siphon in order to ensure exchange of water in the embryo cups.

(B) The trout embryo incubation trays can be made from stainless steel screen (or other acceptable material such as plastic) of about 3–4 mm mesh. The screen tray should be supported above the bottom of the test chamber by two folds of screen or other devices which function as legs or supports. The edges of the screen tray should be turned up to prevent bump spills and to prevent the embryos from rolling off in the event of excessive turbulence. Suspending or supporting the screen tray off the bottom ensures adequate water circulation around the embryos and avoids contact of embryos with possible bottom debris.

(iv) *Test substance delivery system.* (A) The choice of a specific delivery system depends upon the specific properties and requirements of the test substance. The apparatus used should accurately and precisely deliver the appropriate amount of stock solution and dilution water to the test chambers. The system selected shall be calibrated before each test. Calibration includes determining the flow rate through each chamber, and the proportion of stock solution to dilution water delivered to each chamber. The general operation of the test substance delivery system shall be checked at least twice daily for normal operation throughout the test. A minimum of five test substance concentrations and one control shall be used for each test.

(B) The proportional diluter and modified proportional diluter systems and metering pump systems have proven suitable and have received extensive use.

(C) Mixing chambers shall be used between the diluter and the test chamber(s). This may be a small container or flow-splitting chamber to promote mixing of test substance stock solution and dilution water, and is positioned between the diluter and the test chambers for each concentration. If a proportional diluter is used, separate delivery tubes shall run from the flow-splitting chamber to each replicate test chamber. Daily checks on this latter system shall be made.

(D) Silverside fry are injured easily and are susceptible to impingement on the mesh of the incubation cups. Consequently, water flow into and out of the cups when counting fry must be at a slow rate. This can be accomplished by using small diameter (e.g., 2 mm I.D.) capillary tubes to drain the test solution from spitter boxes into the replicate test chambers. The use of a self-starting siphon to gradually lower (i.e., less than or equal to 1 min.) the water level approximately 2 cm in the test chamber is recommended. A minimum water depth of 5 cm should be maintained in the cups. Although it may be satisfactory, a rocker-arm type apparatus has not yet been used with silversides.

(v) *Other equipment required.* (A) An apparatus for removing undesirable organisms, particulate matter and air bubbles.

(B) An apparatus for aerating water.

(C) A suitable magnifying viewer for examination of minnow embryos.

(D) A suitable apparatus for the precise measurement of growth of the fish, including both length (e.g., with metric or ruler caliper or photographic equipment) and weight.

(E) Facilities for providing a continuous supply of live brine shrimp nauplii (*Artemia salina*).

(F) For silversides, facilities for providing a supply of rotifers (*Brachionus plicatilis*) for approximately 11 days.

(G) Facilities (or access to facilities) for performing the required water chemistry analyses.

(vi) *Cleaning of equipment.* (A) Test substance delivery systems and test chambers should be cleaned before use. Test chambers should be cleaned during the test as needed to maintain the dissolved oxygen concentration, and to prevent clogging of the embryo cup screens and narrow flow passages.

(B) Debris can be removed with a rubber bulb and large pipette or by siphoning with a glass tube attached to a flexible hose. Debris should be run into a bucket light enough to observe that no live fish are accidentally discarded.

(vii) *Dilution water*—(A) *General.* (*1*) A constant supply of acceptable dilution water should be available for use throughout the test. Dilution water shall be of a minimum quality such that the test species selected will survive in it for the duration of testing without showing signs of stress (e.g., loss of pigmentation, disorientation, poor response to external stimuli, excessive mucous secretion, lethargy, lack of feeding, or other unusual behavior). A better criterion for an acceptable dilution water for tests on early life stages should be such that the species selected for testing will survive, grow, and reproduce satisfactorily in it.

(*2*) The concentration of dissolved oxygen in the dilution water (fresh or salt) shall be between 90 percent and 100 percent saturation. When necessary, dilution water should be aerated by means of airstones, surface aerators, or screen tubes before the introduction of the test substance.

(*3*) Water that is contaminated with undesirable microoganisms (e.g., fish pathogens) shall not be used. If such contamination is suspected, the water should be passed through a properly maintained ultraviolet sterilizer equipped with an intensity meter before use. Efficacy of the sterilizer can be determined by using standard plate count methods.

(B) *Freshwater.* (*1*) Natural water (clean surface or ground water) is preferred, however, dechlorinated tap water may be used as a last resort. Reconstituted freshwater is not recommended as a practical dilution water for the early life stage toxicity test because of the large volume of water required.

(*2*) Particulate and dissolved substance concentrations should be measured at least twice a year and should meet the following specifications:

Substance	Concentration maximum
Particulate matter	<20 mg/liter.
Total organic carbon (TOC)	<2 mg/liter.
Chemical oxygen demand (COD)	<5 mg/liter.
Un-ionized ammonia	<1 μg/liter.
Residual chlorine	<1 μg/liter.
Total organoposphorus pesticides	<50 ng/liter.
Total organochlorine pesticides plus polychlorinated biphenyls (PCBs).	<50 ng/liter.
Total organic chlorine	<25 ng/liter.

(*3*) During any one month, freshwater dilution water should not vary more than 10 percent from the respective monthly averages of hardness, alkalinity and specific conductance; the monthly pH range should be less than 0.4 pH units.

(C) *Saltwater.* (*1*) Marine dilution water is considered to be of constant quality if the minimum salinity is greater than 15‰ and the weekly range of the salinity is less than 15‰. The monthly range of pH shall be less than 0.8 pH units. Saltwater shall be filtered to remove larval predators. A pore size of ≤20 micrometers (μm) is recommended. For silversides, the recommended salinity is 20 ppt and shall be maintained between 15 and 25 ppt throughout testing.

(*2*) Artificial sea salts may be added to natural seawater during periods of

low salinity to maintain salinity above 15‰.

(3) *Test parameters*—(i) *Dissolved oxygen concentration.* It is recommended that the dissolved oxygen concentration be maintained between 90 and 100 percent saturation; but it shall be no less than 75 percent saturation at all times for both minnow species and between 90 and 100 percent saturation for the trout species in all test chambers. Dilution water in the head box may be aerated, but the test solution itself shall not be aerated.

(ii) *Loading and flow rate.* (A) The loading in test chambers should not exceed 0.1 grams of fish per liter of test solution passing through the test chamber in 24 hours. The flow rate to each chamber should be a minimum of 6 tank volumes per 24 hours. During a test, the flow rates should not vary more than 10 percent from any one test chamber to any other.

(B) A lower loading or higher flow rate or both shall be used if necessary to meet the following three criteria at all times during the test in each chamber containing live test organisms:

(*1*) The concentration of dissolved oxygen shall not fall below 75 percent saturation for the fathead and sheepshead minnows and 90 percent for the rainbow and brook trout;

(*2*) The concentration of un-ionized ammonia should not exceed 1 μg/1; and

(*3*) The concentration of toxicant should not be lowered (i.e., caused by uptake by the test organisms and/or materials on the sides and bottoms of the chambers) more than 20 percent of the mean measured concentration.

(iii) *Temperature.* (A) The recommended test temperatures are:

(*1*) Fathead minnow—25 °C for all life stages.

(*2*) Sheepshead minnow—30 °C for all life stages.

(*3*) Rainbow and brook trout—10 °C for embryos. 12 °C for fry and alevins.

(*4*) Atlantic and tidewater silversides—25 °C for all life stages.

(B) Excursions from the test temperature shall be no greater than ±2.0°C. It is recommended that the test system be equipped with an automatic alarm system to alert staff of instantaneous temperature changes in excess of 2 °C. If the water is heated (i.e., for minnow species), precautions should be taken to ensure that supersaturation of dissolved gases is avoided. Temperatures shall be recorded in all test chambers at the beginning of the test and weekly thereafter. The temperature shall be recorded at least hourly in one test chamber throughout the test.

(iv) *Light.* (A) Brook and rainbow trout embryos shall be maintained in darkness or very low light intensity through one week post-hatch, at which time a 14-hour light and 10-hour dark photoperiod shall be provided.

(B) For fathead and sheepshead minnows, a 16-hour light and 8-hour dark (or 12:12) photoperiod shall be used throughout the test period.

(C) For silversides, a 14-hour light and 10-hour dark photoperiod shall be used throughout the test period.

(D) A 15-minute to 30-minute transition period between light and dark is optional.

(E) Light intensities ranging from 30 to 100 lumens at the water surface shall be provided; the intensity selected should be duplicated as closely as possible for all test chambers.

(e) *Reporting.* A report of the results of an early life stage toxicity test shall include the following:

(1) Name of test, sponsor, investigator, laboratory, and dates of test duration.

(2) Detailed description of the test substance including its source, lot number, composition (identity and concentration of major ingredients and major impurities), known physical and chemical properties, and any carriers (solvents) or other additives used.

(3) The source of the dilution water, its chemical characteristics, and a description of any pretreatment.

(4) Detailed information about the test organisms including scientific name and how verified and source history, observed diseases, treatments, acclimation procedure, and concentration of any contaminants and the method of measurement.

(5) A description of the experimental design and the test chambers, the depth and volume of the solution in the chambers, the way the test was begun, the number of organisms per treatment, the number of replicates, the

loading, the lighting, a description of the test substance delivery system, and the flow rate as volume additions per 24 hours.

(6) Detailed information on feeding of fish during the toxicity test, including type of food used, its source, feeding frequency and results of analysis (i.e., concentrations) for contaminants.

(7) Number of embryos hatched, number of healthy embryos, time to hatch, mortality of embryos and fry, measurements of growth (weight and length), incidence of pathological or histological effects and observations of other effects or clinical signs, number of healthy fish at end of test.

(8) Number of organisms that died or showed an effect in the control and the results of analysis for concentration(s) of any contaminant in the control(s) should mortality occur.

(9) Methods used for, and the results of (with standard deviation), all chemical analyses of water quality and test substance concentration, including validation studies and reagent blanks; the average and range of the test temperature(s).

(10) Anything unusual about the test, any deviation from these procedures, and any other relevant information.

(11) A description of any abnormal effects and the number of fish which were affected during each period between observations in each chamber, and the average concentration of test substance in each test chamber.

(12) Reference to the raw data location.

[50 FR 39321, Sept. 27, 1985, as amended at 52 FR 19064, May 20, 1987]

§ 797.1930 Mysid shrimp acute toxicity test.

(a) *Purpose.* This guideline is intended for use in developing data on the acute toxicity of chemical substances and mixtures (''chemicals'') subject to environmental effects test regulations under the Toxic Substances Control Act (TSCA) (Pub. L. 94–469, 90 Stat. 2003, 15 U.S.C. 2601 *et seq.*). This guideline prescribes a test using mysid shrimp as test organisms to develop data on the acute toxicity of chemicals. The United States Environmental Protection Agency (EPA) will use data from these tests in assessing the hazard of a chemical to the aquatic environment.

(b) *Definitions.* The definitions in section 3 of the Toxic Substances Control Act (TSCA) and in part 792—*Good Laboratory Practice Standards* of this chapter, apply to this test guideline. The following definitions also apply to this guideline.

(1) ''Death'' means the lack of reaction of a test organism to gentle prodding.

(2) ''Flow-through'' means a continuous or an intermittent passage of test solution or dilution water through a test chamber or a holding or acclimation tank, with no recycling.

(3) ''LC_{50}'' means that experimentally derived concentration of test substance that is calculated to kill 50 percent of a test population during continuous exposure over a specified period of time.

(4) ''Loading'' means the ratio of test organisms biomass (grams, wet weight) to the volume (liters) of test solution in a test chamber.

(5) ''Retention chamber'' means a structure within a flow-through test chamber which confines the test organisms, facilitating observation of test organisms and eliminating loss of organisms in outflow water.

(6) ''Static system'' means a test chamber in which the test solution is not renewed during the period of the test.

(c) *Test procedures*—(1) *Summary of the test.* In preparation for the test, test chambers are filled with appropriate volumes of dilution water. If a flow-through test is performed, the flow of dilution water through each chamber is adjusted to the rate desired. The test substance is introduced into each test chamber. In a flow-through test, the rate at which the test substance is added is adjusted to establish and maintain the desired concentration of test substance in each test chamber. The test is started by randomly introducing mysids acclimated in accordance with the test design into the test chambers. Mysids in the test chambers are observed periodically during the test, the dead mysids removed and the findings recorded. Dissolved oxygen

concentration, pH, temperature, salinity, the concentration of test substance, and other water quality characteristics are measured at specified intervals in test chambers. Data collected during the test are used to develop concentration-response curves and LC_{50} values for the test substance.

(2) [Reserved]

(3) *Range-finding test.* (i) A range-finding test should be conducted to determine:

(A) Which life stage (juvenile or young adult) is to be utilized in the definitive test.

(B) The test solution concentrations for the definitive test.

(ii) The mysids should be exposed to a series of widely spaced concentrations of test substance (e.g., 1, 10, 100 mg/l, etc.), usually under static conditions.

(iii) This test should be conducted with both newly hatched juvenile (< 24 hours old) and young adult (5 to 6 days old) mysids. For each age class (juvenile or young adult), a minimum of 10 mysids should be exposed to each concentration of test substance for up to 96 hours. The exposure period may be shortened if data suitable for the purpose of the range-finding test can be obtained in less time. The age class which is most sensitive to the test substance in the range-finding test shall be utilized in the definitive test. When no apparent difference in sensitivity of the two life stages is found, juveniles shall be utilized in the definitive test. No replicates are required, and nominal concentrations of the chemical are acceptable.

(4) *Definitive test.* (i) The purpose of the definitive test is to determine the concentration-response curves and the 48- and 96-hour LC_{50} values with the minimum amount of testing beyond the range-finding test.

(ii) The definitive test shall be conducted on the mysid life stage (juveniles or young adults) which is most sensitive to the test substance being evaluated.

(iii) A minimum of 20 mysids per concentration shall be exposed to five or more concentrations of the chemical chosen in a geometric series in which the ratio is between 1.5 and 2.0 (e.g., 2, 4, 8, 16, 32, and 64 mg/l). An equal number of mysids shall be placed in two or more replicates. If solvents, solubilizing agents or emulsifiers have to be used, they shall be commonly used carriers and shall not possess a synergistic or antagonistic effect on the toxicity of the test substance. The concentration of solvent shall not exceed 0.1 ml/1. The concentration ranges shall be selected to determine the concentration-response curves and LC_{50} values at 48 and 96 hours.

(iv) Every test shall include controls consisting of the same dilution water, conditions, procedures, and mysids from the same population or culture container, except that none of the chemical is added.

(v) The dissolved oxygen concentration temperature, salinity, and pH shall be measured at the beginning and end of the test in each chamber.

(vi) The test duration is 96 hours. The test is unacceptable if more than 10 percent of the control organisms die or exhibit abnormal behavior during the 96 hour test period. Each test chamber should be checked for dead mysids at 24, 48, 72, and 96 hours after the beginning of the test. Concentration-response curves and 24-, 48-, 72- and 96-hour LC_{50} values should be determined along with their 95 percent confidence limits.

(vii) In addition to death, any abnormal behavior or appearance shall also be reported.

(viii) Test organisms shall be impartially distributed among test chambers in such a manner that test results show no significant bias from the distributions. In addition, test chambers within the testing area shall be positioned in a random manner or in a way in which appropriated statistical analyses can be used to determine the variation due to placement.

(ix) The concentration of the test substance in the chambers should be measured as often as is feasible during the test. At a minimum, during static tests the concentration of test substance shall be measured at each concentration at the beginning and at the end of the test. During the flow-through test, the concentration of test substance should be measured at the beginning and end of the test and in at

least one appropriate chamber whenever a malfunction is detected in any part of the test substance delivery system. Equal aliquots of test solution may be removed from each replicate chamber and pooled for analysis. Among replicate test chambers of a treatment concentration, the measured concentration of the test substance should not vary more than 20 percent.

(5) [Reserved]

(6) *Analytical measurements*—(i) *Test chemical.* Deionized water should be used in making stock solutions of the test substance. Standard analytical methods should be used whenever available in performing the analyses. The analytical method used to measure the amount of test substance in a sample shall be validated before beginning the test by appropriate laboratory practices. An analytical method is not acceptable if likely degradation products of the test substance, such as hydrolysis and oxidation products, give positive or negative interferences which cannot be systematically identified and corrected mathematically.

(ii) *Numerical.* The number of dead mysids shall be counted during each definitive test. Appropriate statistical analyses should provide a goodness-of-fit determination for the concentration-response curves. A 48- and 96-hour LC_{50} and corresponding 95 percent interval shall be calculated.

(d) *Test conditions*—(1) *Test species*—(i) *Selection.* (A) The mysid shrimp, *Mysidopsis bahia,* is the organism specified for these tests. Either juvenile (<24 hours old) or young adult (5 to 6 days old) mysids are to be used to start the test.

(B) Mysids to be used in chronic toxicity tests should originate from laboratory cultures in order to ensure the individuals are of similar age and experimental history. Mysids used for establishing laboratory cultures may be purchased commercially or collected from appropriate natural areas. Because of similarities with other mysids species, taxonomic verification should be obtained from the commercial supplier by experienced laboratory personnel or by an outside expert.

(C) Mysids used in a particular test shall be of similar age and be of normal size and appearance for their age. Mysids shall not be used for a test if they exhibit abnormal behavior or if they have been used in a previous test, either in a treatment or in a control group.

(ii) *Acclimation.* (A) Any change in the temperature and chemistry of the dilution water used for holding or culturing the test organisms to those of the test shall be gradual. Within a 24-hour period, changes in water temperature shall not exceed 1 °C, while salinity changes shall not exceed 5 percent.

(B) During acclimation mysids should be maintained in facilities with background colors and light intensities similar to those of the testing areas.

(iii) *Care and handling.* Methods for the care and handling of mysids such as those described in paragraph (f)(1) of this section can be used during holding, culturing and testing periods.

(iv) *Feeding.* Mysids should be fed during testing. Any food utilized should support survival, growth and reproduction of the mysids. A recommended food is live *Artemia* spp. (48-hour-old nauplii).

(2) *Facilities*—(i) *Apparatus.* (A) Facilities which may be needed to perform this test include: (*1*) flow-through or recirculating tanks for holding and acclimating mysids; (*2*) a mechanism for controlling and maintaining the water temperature during the holding, acclimation and test periods; (*3*) apparatus for straining particulate matter, removing gas bubbles, or aerating the water, as necessary; and (*4*) an apparatus for providing a 14-hour light and 10-hour dark photoperiod with a 15 to 30 minute transition period. In addition, for flow-through tests, flow-through chambers and a test substance delivery system are required. Furthermore, it is recommended that mysids be held in retention chambers within test chambers to facilitate observations and eliminate loss of test organisms through outflow water. For static tests, suitable chambers for exposing test mysids to the test substance are required. Facilities should be well ventilated and free of fumes and disturbances that may affect the test organisms.

(B) Test chambers shall be loosely covered to reduce the loss of test solution or dilution water due to evaporation and to minimize the entry of dust or other particulates into the solutions.

(ii) *Cleaning.* Test substance delivery systems and test chambers shall be cleaned before each test following standard laboratory practices.

(iii) *Construction materials.* (A) Materials and equipment that contact test solutions should be chosen to minimize sorption of test chemicals from dilution water and should not contain substances that can be leached into aqueous solution in quantities that can affect test results.

(B) For use in the flow-through test, retention chambers utilized for confinement of test organisms can be constructed with netting material of appropriate mesh size.

(iv) *Dilution water.* (A) Natural or artificial seawater is acceptable as dilution water if mysids will survive and successfully reproduce in it for the duration of the holding, acclimating and testing periods without showing signs of stress, such as reduced growth and fecundity. Mysids shall be cultured and tested in dilution water from the same origin.

(B) Natural seawater shall be filtered through a filter with a pore size of <20 microns prior to use in a test.

(C) Artificial seawater can be prepared by adding commercially available formulations or by adding specific amounts of reagent-grade chemicals to deionized water. Deionized water with a conductivity less than 1 μohm/cm at 12 °C is acceptable for making artificial seawater. When deionized water is prepared from a ground or surface water source, conductivity and total organic carbon (or chemical oxygen demand) shall be measured on each batch.

(v) *Test substance delivery system.* In flow-through tests, proportional diluters, metering pumps, or other suitable systems should be used to deliver test substance to the test chambers. The system used shall be calibrated before each test. Calibration includes determining the flow rate through each chamber and the concentration of the test substance in each chamber. The general operation of the test substance delivery system should be checked twice daily during a test. The 24-hour flow through a test chamber shall be equal to at least 5 times the volume of the test chamber. During a test, the flow rates should not vary more than 10 percent among test chambers or across time.

(3) *Test parameters.* Environmental parameters of the water contained in test chambers shall be maintained as specified below:

(i) The test temperature shall be 25°C. Excursions from the test temperature shall be not greater than ±2°C.

(ii) Dissolved oxygen concentration between 60 and 105 percent saturation. Aeration, if needed to achieve this level, shall be done before the addition of the test substance. All treatment and control chambers shall be given the same aeration treatment.

(iii) The number of mysids placed in a test solution shall not be so great as to affect results of the test. Loading shall not exceed 30 mysids per liter for a static test. Loading requirements for the flow-through test will vary depending on the flow rate of dilution water. The loading shall not cause the dissolved oxygen concentration to fall below the recommended levels.

(iv) Photoperiod of 14 hours light and 10 hours darkness, with a 15 to 30 minute transition period.

(v) Salinity of 20 parts per thousand ±3 percent.

(e) *Reporting.* The sponsor shall submit to the EPA all data developed during the test that are suggestive or predictive of acute toxicity and all concomitant toxicologic manifestations. In addition to the general reporting requirements prescribed in part 792—*Good Laboratory Practice Standards* of this chapter, the reporting of test data shall include the following:

(1) The source of the dilution water, its chemical characteristics (e.g., salinity, pH, etc.) and a description of any pretreatment.

(2) Detailed information about the test organisms, including the scientific name and method of verification, age, source, history, abnormal behavior, acclimation procedures and food used.

(3) A description of the test chambers, the depth and volume of solution in the chamber, the way the test was

begun (e.g., conditioning, test substance additions, etc.), the number of organisms per treatment, the number of replicates, the loading, the lighting, the test substance delivery system and the flow rate expressed as volume additions per 24 hours.

(4) The measured concentration of test substance in test chambers at the times designated.

(5) The number and percentage of organisms that died or showed any other adverse effects in the control and in each treatment at each observation period.

(6) Concentration-response curves shall be fitted to mortality data collected at 24, 48, 72, and 96 hours. A statistical test of goodness-of-fit shall be performed and the results reported.

(7) The 96-hour LC_{50} and when sufficient data have been generated, the 24-, 48-, and 72-hour LC_{50}'s and the corresponding 95-percent confidence limits and the methods used to calculate the values. These calculations shall be made using the average measured concentration of the test substance.

(8) Methods and data records of all chemical analyses of water quality and test substance concentrations, including method validations and reagent blanks.

(9) The data records of the holding, acclimation and test temperature and salinity.

(f) *References.* For additional background information on this test guideline the following references should be consulted:

(1) U.S. Environmental Protection Agency, ''Bioassay Procedures for the Ocean Disposal Permit Program,'' EPA Report No. 600–9–78–010 (Gulf Breeze, Florida, 1978).

(2) [Reserved]

[50 FR 39321, Sept. 27, 1985, as amended at 52 FR 19068, May 20, 1987; 52 FR 26150, July 13, 1987]

§ 797.1950 Mysid shrimp chronic toxicity test.

(a) *Purpose.* This guideline is intended for use in developing data on the chronic toxicity of chemical substances and mixtures (''chemicals'') subject to environmental effects test regulations under the Toxic Substances Control Act (TSCA) (Pub. L. 94–469, 90 Stat. 2003, 15 U.S.C. 2601 *et seq.*). This guideline prescribes tests using mysids as test organisms to develop data on the chronic toxicity of chemicals. The United States Environmental Protection Agency (EPA) will use data from these tests in assessing the hazard of a chemical to the aquatic environment.

(b) *Definitions.* The definitions in section 3 of the Toxic Substances Control Act (TSCA) and in part 792—*Good Laboratory Practice Standards* of this chapter apply to this test guideline. The following definitions also apply to this guideline:

(1) ''Chronic toxicity test'' means a method used to determine the concentration of a substance that produces an adverse effect from prolonged exposure of an organism to that substance. In this test, mortality, number of young per female and growth are used as measures of chronic toxicity.

(2) ''Death'' means the lack of reaction of a test organism to gentle prodding.

(3) ''Flow-through'' means a continuous or an intermittent passage of test solution or dilution water through a test chamber or a holding or acclimation tank, with no recycling.

(4) ''G1 (Generation 1)'' means those mysids which are used to begin the test, also referred to as adults; G2 (Generation 2) are the young produced by G1.

(5) ''LC_{50}'' means that experimentally derived concentration of test substance that is calculated to kill 50 percent of a test population during continuous exposure over a specified period of time.

(6) ''Loading'' means the ratio of test organism biomass (gram, wet weight) to the volume (liters) of test solution in a test chamber.

(7) ''MATC'' (Maximum Acceptable Toxicant Concentration) means the maximum concentration at which a chemical can be present and not be toxic to the test organism.

(8) ''Retention chamber'' means a structure within a flow-through test chamber which confines the test organisms, facilitating observation of test organisms and eliminating washout from test chambers.

(c) *Test procedures*—(1) *Summary of the test.* (i) In preparation for the test, the flow of test solution through each

chamber is adjusted to the rate desired. The test substance is introduced into each test chamber. The rate at which the test substance is added is adjusted to establish and maintain the desired concentration of test substance in each test chamber. The test is started by randomly introducing mysids acclimated in accordance with the test design into retention chambers within the test and the control chambers. Mysids in the test and control chambers are observed periodically during the test, the dead mysids removed and the findings reported.

(ii) Dissolved oxygen concentration, pH, temperature, salinity, the concentration of test substance and other water quality characteristics are measured at specified intervals in selected test chambers.

(iii) Data collected during the test are used to develop a MATC (Maximum Acceptable Toxicant Concentration) and quantify effects on specific chronic parameters.

(2) [Reserved]

(3) *Range-finding test.* (i) A range-finding test should be conducted to establish test solution concentrations for the definitive test.

(ii) The mysids should be exposed to a series of widely spaced concentrations of the test substance (e.g., 1, 10, 100 mg/l), usually under static conditions.

(iii) A minimum of 10 mysids should be exposed to each concentration of test substance for a period of time which allows estimation of appropriate chronic test concentrations. No replicates are required and nominal concentrations of the chemical are acceptable.

(4) *Definitive test.* (i) The purpose of the definitive test is to determine concentration-response curves, LC_{50} values, and effects of a chemical on growth and reproduction during chronic exposure.

(ii) A minimum of 40 mysids per concentration shall be exposed to four or more concentrations of the chemical chosen in a geometric series in which the ratio is between 1.5 and 2.0 (e.g., 2, 4, 8, 16, 32, and 64 mg/1). An equal number of mysids shall be placed in two or more replicates. If solvents, solubilizing agents or emulsifiers have to be used, they shall be commonly used carriers and shall not possess a synergistic or antagonistic effect on the toxicity of the test substance. The concentration of solvent should not exceed 0.1 ml/1. The concentration ranges should be selected to determine the concentration response curves, LC_{50} values and MATC. Concentration of test substance in test solutions should be analyzed prior to use.

(iii) Every test should include controls consisting of the same dilution water, conditions, procedures and mysids from the same population or culture container, except that none of the chemical is added.

(iv) The dissolved oxygen concentration, temperature, salinity, and pH shall be measured weekly in each chamber.

(v) The test duration is 28 days. The test is unacceptable if more than 20 percent of the control organisms die, appear stressed or are diseased during the test. The number of dead mysids in each chamber shall be recorded on days 7, 14, 21, and 28 of the test. At the time when sexual characteristics are discernible in the mysids (approximately 10 to 12 days in controls; possible delays may occur in mysids exposed to test substances), the number of males and females (identified by ventral brood pouch) in each chamber shall be recorded. Body length (as measured by total midline body length, from the anterior tip of the carapace to the posterior margin of the uropod) shall be recorded for males and females at the time when sex can be determined simultaneously for all mysids in control and treatment groups. This time cannot be specified because of possible delays in sexual maturation of mysids exposed to test substances. A second observation of male and female body lengths shall be conducted on day 28 of the test. To reduce stress on the mysids, body lengths can be recorded by photography through a stereomicroscope with appropriate scaling information. As offspring are produced by the G1 mysids (approximately 13 to 16 days in controls), the young shall be counted and separated into retention chambers at the same test substance concentration as the chambers where they originated. If

available prior to termination of the test, observations on the mortality, number of males and females and male and female body length shall be recorded for the G2 mysids. Concentration-response curves, LC_{50} values and associated 95 percent confidence limits for the number of dead mysids (G1) shall be determined for days 7, 14, 21, and 28. An MATC shall be determined for the most sensitive test criteria measured (cumulative mortality of adult mysids, number of young per female, and body lengths of adult males and females).

(vi) In addition to death, any abnormal behavior or appearance shall also be reported.

(vii) Test organisms shall be impartially distributed among test chambers in such a manner that test results show no significant bias from the distributions. In addition, test chambers within the testing area shall be positioned in a random manner or in a way in which appropriate statistical analyses can be used to determined the variation due to placement.

(viii) The concentration of the test substance in the chambers should be measured as often as is feasible during the test. The concentration of test substance shall be measured:

(A) At each test concentration at the beginning of the test and on days 7, 14, 21, and 28; and

(B) In at least one appropriate chamber whenever a malfunction is detected in any part of the test substance delivery system.

Equal aliquots of test solutions may be removed from each test chamber and pooled for analysis. Among replicate test chambers of a treatment concentration, the measured concentration of the test substance should not vary more than 20 percent.

(5) [Reserved]

(6) *Analytical measurements*—(i) *Test chemical.* Deionized water should be used in making stock solutions of the test substance. Standard analytical methods should be employed whenever available in performing the analyses. The analytical method used to measure the amount of test substance in a sample shall be validated before beginning the test by appropriate laboratory practices. An analytical method is not acceptable if likely degradation products of the test substance, such as hydrolysis and oxidation products, give positive or negative interferences which cannot be systematically identified and corrected mathematically.

(ii) *Numerical.* (A) The number of dead mysids, cumulative young per female, and body lengths of male and female mysids shall be recorded during each definitive test. Appropriate statistical analyses shall provide a goodness-of-fit determination for the day 7, 14, 21 and 28 adult (Gl) death concentration-response curves.

(B) A 7-, 14-, 21- and 28-day LC_{50}, based on adult (Gl) death, and corresponding 95 percent confidence intervals shall be calculated. Appropriate statistical tests (e.g., analysis of variance, mean separation test) should be used to test for significant chemical effects on chronic test criteria (cumulative mortality of adults, cumulative number of young per female and body lengths of adult male and females) on designated days. An MATC shall be calculated using these chronic tests criteria.

(d) *Test conditions*—(1) *Test species*—(i) *Selection.* (A) The mysid shrimp, *Mysidopsis bahia*, is the organism specified for these tests. Juvenile mysids, ≤24 hours old, are to be used to start the test.

(B) Mysids to be used in chronic toxicity tests should originate from laboratory cultures in order to ensure the individuals are of similar age and experimental history. Mysids used for establishing laboratory cultures may be purchased commercially or collected from appropriate natural areas. Because of similarities with other mysid species, taxonomic verification should be obtained from the commercial supplier, by experienced laboratory personnel, or by an outside expert.

(C) Mysids used in a particular test shall be of similar age and be of normal size and appearance for their age.

(D) Mysids shall not be used for a test if they exhibit abnormal behavior, or if they have been used in a previous test, either in a treatment or in a control group.

(ii) *Acclimation.* (A) Any change in the temperature and chemistry of the water used for holding or culturing the

test organisms to those of the test should be gradual. Within a 24-hour period, changes in water temperature should not exceed 1 °C, while salinity changes should not exceed 5 percent.

(B) During acclimation mysids should be maintained in facilities with background colors and light intensities similar to those of the testing areas.

(iii) *Care and handling.* Methods for the care and handling of mysids such as those described in paragraph (f)(1) of this section can be used during holding, culturing and testing periods.

(iv) *Feeding.* Mysids should be fed during testing. Any food utilized should support survival, growth and reproduction of the mysids. A recommended food is live *Artemia* spp. nauplii (approximately 48 hours old).

(2) *Facilities*—(i) *Apparatus.* (A) Facilities which may be needed to perform this test include: (*1*) flow-through or recirculating tanks for holding and acclimating mysids; (*2*) a mechanism for controlling and maintaining the water temperature during the holding, acclimation and test periods; (*3*) apparatus for straining particulate matter, removing gas bubbles, or aerating the water, as necessary; and (*4*) an apparatus for providing a 14-hour light and 10-hour dark photoperiod with a 15- to 30-minute transition period. In addition, flow-through chambers and a test substance delivery system are required. It is recommended that mysids be held in retention chambers within test chambers to facilitate observations and eliminate loss through outflow water.

(B) Facilities should be well ventilated and free of fumes and disturbances that may affect test organisms.

(C) Test chambers shall be loosely covered to reduce the loss of test solution or dilution water due to evaporation and to minimize the entry of dust or other particulates into the solutions.

(ii) *Cleaning.* Test substance delivery systems and test chambers shall be cleaned before each use following standard laboratory practices.

(iii) *Construction materials.* (A) Materials and equipment that contact test solutions should be chosen to minimize sorption of test chemicals from the dilution water and should not contain substances that can be leached into aqueous solution in quantities that can affect the test results.

(B) Retention chambers utilized for confinement of test organisms can be constructed with netting material of appropriate mesh size.

(iv) *Dilution water.* (A) Natural or artificial seawater is acceptable as dilution water if mysids will survive and successfully reproduce in it for the duration of the holding, acclimating and testing periods without showing signs of stress, such as reduced growth and fecundity. Mysids shall be cultured and tested in dilution water from the same origin.

(B) Natural seawater shall be filtered through a filter with a pore size of >20 microns prior to use in a test.

(C) Artificial seawater can be prepared by adding commercially available formulations or by adding specific amounts of reagent-grade chemicals to deionized or glass-distilled water. Deionized water with a conductivity less than 1 μohm/cm at 12 °C is acceptable as the diluent for making artificial seawater. When deionized water is prepared from a ground or surface water source, conductivity and total organic carbon (or chemical oxygen demand) shall be measured on each batch.

(v) *Test substance delivery system.* Proportional diluters, metering pumps, or other suitable systems should be used to deliver test substance to the test chambers. The system used shall be calibrated before each test. Calibration includes determining the flow rate and the concentration of the test substance in each chamber. The general operation of the test substance delivery system should be checked twice daily during a test. The 24-hour flow rate through a chamber shall be equal to at least 5 times the volume of the chamber. The flow rates should not vary more than 10 percent among chambers or across time.

(3) *Test parameters.* Environmental parameters of the water contained in test chambers shall be maintained as specified below:

(i) The test temperature shall be 25 °C. Excursions from the test temperature shall be no greater than ±2 °C.

(ii) Dissolved oxygen concentration between 60 and 105 percent saturation.

Aeration, if needed to achieve this level, shall be done before the addition of the test substance. All treatment and control chambers shall be given the same aeration treatment.

(iii) The number of mysids placed in a test solution shall not be so great as to affect results of the test. Loading requirements for the test will vary depending on the flow rate of dilution water. The loading shall not cause the dissolved oxygen concentration to fall below the recommended levels.

(iv) Photoperiod of 14 hours light and 10 hours darkness, with a 15–30 minute transition period.

(v) Salinity of 20 parts per thousand ±3 percent.

(e) *Reporting.* The sponsor shall submit to the EPA all data developed by the test that are suggestive or predictive of chronic toxicity and all concomitant toxicologic manifestations. In addition to the general reporting requirements prescribed in part 792—*Good Laboratory Practice Standards* of this chapter, the reporting of test data shall include the following:

(1) The source of the dilution water, its chemical characteristics (e.g., salinity, pH, etc.) and a description of any pretreatment.

(2) Detailed information about the test organisms, including the scientific name and method of verification, average length, age, source, history, observed diseases, treatments, acclimation procedures and food used.

(3) A description of the test chambers, the depth and volume of solution in the chamber, the way the test was begun (e.g., conditioning, test substance additions, etc.), the number of organisms per treatment, the number of replicates, the loading, the lighting, the test substance delivery system, and the flow rate expressed as volume additions per 24 hours.

(4) The measured concentration of test substance in test chambers at the times designated.

(5) The first time (day) that sexual characteristics can be observed in controls and in each test substance concentration.

(6) The length of time for the appearance of the first brood for each concentration.

(7) The means (average of replicates) and respective 95 percent confidence intervals for:

(i) Body length of males and females at the first observation day (depending on time of sexual maturation) and on day 28.

(ii) Cumulative number of young produced per female on day 28.

(iii) Cumulative number of dead adults on day 7, 14, 21 and 28.

(iv) If available prior to test termination (day 28), effects on G2 mysids (number of males and females, body length of males and females and cumulative mortality).

(8) The MATC is calculated as the geometric mean between the lowest measured test substance concentration that had a significant ($P<0.05$) effect and the highest measured test substance concentration that had no significant ($P<0.05$) effect in the chronic test. The most sensitive of the test criteria for adult (Gl) mysids (cumulative number of dead mysids, body lengths of males and females or the number of young per female) is used to calculate the MATC. The criterion selected for MATC computation is the one which exhibits an effect (a statistically significant difference between treatment and control groups; $P<0.05$) at the lowest test substance concentration for the shortest period of exposure. Appropriate statistical tests (analysis of variance, mean separation test) should be used to test for significant chemical effects. The statistical tests employed and the results of these tests shall be reported.

(9) Concentration-response curves shall be fitted to the cumulative number of adult dead for days 7, 14, 21, and 28. A statistical test of goodness-of-fit shall be performed and the results reported.

(10) An LC_{50} value based on the number of dead adults with corresponding 95 percent confidence intervals for days 7, 14, 21 and 28. These calculations shall be made using the average measured concentration of the test substance.

(11) Methods and data records of all chemical analyses of water quality and test substance concentrations, including method validations and reagent blanks.

(12) The data records of the holding, acclimation and test temperature and salinity.

(f) *References.* For additional background information on this test guideline the following references should be consulted:

(1) U.S. Environmental Protection Agency, ''Bioassay Procedures for the Ocean Disposal Permit Program,'' EPA Report No. 600/9–78–010 (Gulf Breeze, Florida, 1978).

(2) [Reserved]

[50 FR 39321, Sept. 27, 1985, as amended at 52 FR 19069, May 20, 1987]

PART 798—HEALTH EFFECTS TESTING GUIDELINES

Subparts A–B [Reserved]

Subpart C—Subchronic Exposure

Sec.
798.2250 Dermal toxicity.
798.2450 Inhalation toxicity.
798.2650 Oral toxicity.

Subpart D—Chronic Exposure

798.3260 Chronic toxicity.
798.3300 Oncogenicity.
798.3320 Combined chronic toxicity/oncogenicity.

Subpart E—Specific Organ/Tissue Toxicity

798.4100 Dermal sensitization.
798.4350 Inhalation developmental toxicity study.
798.4700 Reproduction and fertility effects.
798.4900 Developmental toxicity study.

Subpart F—Genetic Toxicity

798.5195 Mouse biochemical specific locus test.
798.5200 Mouse visible specific locus test.
798.5265 The salmonella typhimurium reverse mutation assay.
798.5275 Sex-linked recessive lethal test in drosophila melanogaster.
798.5300 Detection of gene mutations in somatic cells in culture.
798.5375 In vitro mammalian cytogenetics.
798.5385 In vivo mammalian bone marrow cytogenetics tests: Chromosomal analysis.
798.5395 In vivo mammalian bone marrow cytogenetics tests: Micronucleus assay.
798.5450 Rodent dominant lethal assay.
798.5460 Rodent heritable translocation assays.
798.5500 Differential growth inhibition of repair proficient and repair deficient bacteria: ''Bacterial DNA damage or repair tests.''
798.5955 Heritable translocation test in drosophila melanogaster.

Subpart G—Neurotoxicity

798.6050 Functional observational battery.
798.6200 Motor activity.
798.6400 Neuropathology.
798.6500 Schedule-controlled operant behavior.
798.6560 Subchronic delayed neurotoxicity of organophosphorus substances.

AUTHORITY: 15 U.S.C. 2603.

SOURCE: 50 FR 39397, Sept. 27, 1985, unless otherwise noted.

Subparts A–B [Reserved]

Subpart C—Subchronic Exposure

§ 798.2250 Dermal toxicity.

(a) *Purpose.* In the assessment and evaluation of the toxic characteristics of a chemical, the determination of subchronic dermal toxicity may be carried out after initial information on toxicity has been obtained by acute testing. The subchronic dermal study has been designed to permit the determination of the no-observed-effect level and toxic effects associated with continuous or repeated exposure to a test substance for a period of 90 days. The test is not capable of determining those effects that have a long latency period for development (e.g., carcinogenicity and life shortening). It provides information on health hazards likely to arise from repeated exposure by the dermal route over a limited period of time. It will provide information on target organs, the possibilities of accumulation, and can be of use in selecting dose levels for chronic studies and for establishing safety criteria for human exposure.

(b) *Definitions.* (1) Subchronic dermal toxicity is the adverse effects occurring as a result of the repeated daily exposure of experimental animals to a chemical by dermal application for part (approximately 10 percent) of a life span.

(2) Dose in a dermal test is the amount of test substance applied to the skin (applied daily in subchronic tests).

Dose is expressed as weight of the substance (g, mg) per unit weight of test animal (e.g., mg/kg).

(3) No-effect level/No-toxic-effect level/No-adverse-effect level/No-observed-effect level is the maximum dose used in a test which produces no observed adverse effects. A no-observed-effect level is expressed in terms of the weight of a test substance given daily per unit weight of test animal (mg/kg).

(4) Cumulative toxicity is the adverse effects of repeated doses occurring as a result of prolonged action on, or increased concentration of the administered test substance or its metabolites in susceptible tissues.

(c) *Principle of the test method.* The test substance is applied daily to the skin in graduated doses to several groups of experimental animals, one dose level per unit group, for a period of 90 days. During the period of application the animals are observed daily to detect signs of toxicity. Animals which die during the test are necropsied, and at the conclusion of the test the surviving animals are sacrificed and necropsied and appropriate histopathological examinations carried out.

(d) *Limit test.* If a test at one dose level of at least 1,000 mg/kg body weight (expected human exposure may indicate the need for a higher dose level), using the procedures described for this study, produces no observable toxic effects and if toxicity would not be expected based upon data of structurally related compounds, then a full study using three dose levels might not be necessary.

(e) *Test procedures*—(1) *Animal selection*—(i) *Species and strain.* A mammalian species shall be used for testing. The rat, rabbit, or guinea pig may be used, although the albino rabbit is preferred. The albino rabbit is preferred because of its size, skin permeability, and extensive data base. Commonly used laboratory strains shall be employed. If another mammalian species is used, the tester shall provide justification/reasoning for its selection.

(ii) *Age.* Young adult animals shall be used. The following weight ranges at the start of the test are suggested in order to provide animals of a size which facilitates the conduct of the test: rats, 200 to 300 g; rabbits, 2.0 to 3.0 kg; guinea pigs, 350 to 450 g.

(iii) *Sex.* (A) Equal numbers of animals of each sex with healthy skin shall be used at each dose level.

(B) The females shall be nulliparous and nonpregnant.

(iv) *Numbers.* (A) At least 20 animals (10 females and 10 males) shall be used at each dose level.

(B) If interim sacrifices are planned, the number shall be increased by the number of animals scheduled to be sacrificed before completion of the study.

(2) *Control groups.* A concurrent control group is required. This group shall be an untreated or sham-treated control group or, if a vehicle is used in administering the test substance, a vehicle control group. If the toxic properties of the vehicle are not known or cannot be made available, both untreated and vehicle control groups are required.

(3) *Satellite group.* A satellite group of 20 animals (10 animals per sex) may be treated with the high dose level for 90 days and observed for reversibility, persistence, or delayed occurrence, of toxic effects for a posttreatment period of appropriate length, normally not less than 28 days.

(4) *Dose level and dose selection.* (i) In subchronic toxicity tests, it is desirable to have a dose-response relationship as well as a no-observed-toxic-effect level. Therefore, at least 3 dose levels with a control and, where appropriate, a vehicle control (corresponding to the concentration of vehicle at the highest exposure level) shall be used. Doses should be spaced appropriately to produce test groups with a range of toxic effects. The data shall be sufficient to produce a dose-response curve.

(ii) The highest dose level should result in toxic effects but not produce severe skin irritation or an incidence of fatalities which would prevent a meaningful evaluation.

(iii) The lowest dose level should not produce any evidence of toxicity. Where there is a usable estimation of human exposure, the lowest dose level should exceed this.

(iv) Ideally, the intermediate dose level(s) should produce minimal observable toxic effects. If more than one

intermediate dose is used, the dose levels should be spaced to produce a gradation of toxic effects.

(v) In the low and intermediate groups and in the controls the incidence of fatalities should be low, to permit a meaningful evaluation of the results.

(5) *Exposure conditions.* The animals are treated with test substance, ideally for at least 6 hours per day on a 7-day per week basis, for a period of 90 days. However, based primarily on practical considerations, application on a 5-day per week basis is considered to be acceptable.

(6) *Observation period.* (i) Duration of observation shall be at least 90 days.

(ii) Animals in the satellite group scheduled for followup observations should be kept for at least 28 days further without treatment to detect recovery from, or persistence of, toxic effects.

(7) *Preparation of animal skin.* (i) Shortly before testing, fur shall be clipped from the dorsal area of the trunk of the test animals. Shaving may be employed, but it should be carried out approximately 24 hours before the test. Repeat clipping or shaving is usually needed at approximately weekly intervals. When clipping or shaving the fur, care should be taken to avoid abrading the skin, which could alter its permeability.

(ii) Not less than 10 percent of the body surface area should be clear for the application of the test substance. The weight of the animal should be taken into account when deciding on the area to be cleared and on the dimensions of any covering used.

(iii) When testing solids, which may be pulverized if appropriate, the test substance should be moistened sufficiently with water or, where necessary, a suitable vehicle to ensure good contact with the skin. When a vehicle is used, the influence of the vehicle on toxicity of and penetration of the skin by the test substance should be taken into account.

(8) *Application of the test substance.* (i) The test substance shall be applied uniformly over an area which is approximately 10 percent of the total body surface area. With highly toxic substances, the surface area covered may be less, but as much of the area shall be covered with as thin and uniform a film as possible.

(ii) During the exposure period, the test substance shall be held in contact with the skin with a porous gauze dressing and nonirritating tape. The test site shall be further covered in a suitable manner to retain the gauze dressing and test substance and ensure that the animals cannot ingest the test substance. Restrainers may be used to prevent the ingestion of the test substance, but complete immobilization is not a recommended method.

(9) *Observation of animals.* (i) Each animal shall be observed daily, and if necessary handled to appraise its physical condition.

(ii) Additional observations shall be made daily with appropriate actions taken to minimize loss of animals to the study (e.g., necropsy or refrigeration of those animals found dead and isolation or sacrifice of weak or moribund animals).

(iii) Signs of toxicity shall be recorded as they are observed, including the time of onset, the degree, and duration.

(iv) Cage-side observations shall include, but not be limited to, changes in skin and fur, eyes and mucous membranes, respiratory, circulatory, autonomic and central nervous systems, somatomotor activity and behavior pattern.

(v) Animals shall be weighed weekly. Feed consumption shall also be determined weekly if abnormal body weight changes are observed.

(vi) At the end of the study period, all survivors in the nonsatellite treatment groups shall be sacrificed. Moribund animals shall be removed and sacrificed when noticed.

(10) *Clinical examinations.* (i) The following examinations shall be made on all animals of each sex in each group:

(A) Certain hematology determinations shall be carried out at least two times during the test period on all groups of animals including concurrent controls: After 30 days of test and just prior to terminal sacrifice at the end of the test period. Hematology determinations which are appropriate to all studies: Hematocrit, hemoglobin concentration, erythrocyte count, total

and differential leukocyte count, and a measure of clotting potential such as clotting time, prothrombin time, thromboplastin time, or platelet count.

(B) Certain clinical biochemistry determinations on blood should be carried out at least two times during the test period on all groups of animals including concurrent controls: After 30 days of test and just prior to terminal sacrifice at the end of the test period. Clinical biochemistry test areas which are considered appropriate to all studies: Electrolyte balance, carbohydrate metabolism, and liver and kidney function. The selection of specific tests will be influenced by observations on the mode of action of the substance. Suggested determinations: Calcium, phosphorus, chloride, sodium, potassium, fasting glucose (with period of fasting appropriate to the species), serum glutamic pyruvic transaminase (now known as serum alanine aminotransferase), serum glutamic oxaloacetic transaminase (now known as serum aspartate aminotransferase), ornithine decarboxylase, gamma glutamyl transpeptidase, urea nitrogen, albumen blood creatinine, total bilirubin, and total serum protein measurements. Other determinations which may be necessary for an adequate toxicological evaluation include: Analyses of lipids, hormones, acid/base balance, methemoglobin, and cholinesterase activity. Additional clinical biochemistry may be employed, where necessary, to extend the investigation of observed effects.

(ii) The following examinations shall be made on high dose and control groups. If changes in the eyes are detected all animals should be examined.

(A) Ophthalmological examination, using an ophthalmoscope or equivalent suitable equipment, shall be made prior to exposure to the test substance and at the termination of the study.

(B) Urinalysis is not recommended on a routine basis, but only when there is an indication based on expected or observed toxicity.

(11) *Gross necropsy*. (i) All animals shall be subjected to a full gross necropsy which includes examination of the external surface of the body, all orifices, and the cranial, thoracic, and abdominal cavities and their contents.

(ii) The liver, kidneys, adrenals, brain, and gonads shall be weighed wet, as soon as possible after dissection, to avoid drying. In addition, for the rodent, the brain; for the non-rodent, the thyroid with parathyroids also shall be weighed wet.

(iii) The following organs and tissues, or representative samples thereof, shall be preserved in a suitable medium for possible future histopathological examination: All gross lesions; lungs—which should be removed intact, weighed, and treated with a suitable fixative to ensure that lung structure is maintained (perfusion with the fixative is considered to be an effective procedure); nasopharyngeal tissues; brain—including sections of medulla/pons, cerebellar cortex, and cerebral cortex; pituitary; thyroid/parathyroid; thymus; trachea; heart; sternum with bone marrow; salivary glands; liver; spleen; kidneys; adrenals; pancreas; gonads; uterus; accessory genital organs (epididymis, prostate, and, if present, seminal vesicles); aorta; (skin); gall bladder (if present); esophagus; stomach; duodenum; jejunum; ileum; cecum; colon; rectum; urinary bladder; representative lymph node; (mammary gland); (thigh musculature); peripheral nerve; (eyes); (femur—including articular surface); (spinal cord at three levels—cervical, midthoracic, and lumbar); and (zymbal and exorbital lachrymal glands).

(12) *Histopathology*. The following histopathology shall be performed:

(i) Full histopathology on normal and treated skin and on organs and tissues, listed above, of all animals in the control and high dose groups.

(ii) All gross lesions in all animals.

(iii) Target organs in all animals.

(iv) The tissues listed in parenthesis in paragraph (e)(11)(iii) of this section, if indicated by signs of toxicity or expected target organ involvement.

(v) Lungs of animals (rodents) in the low and intermediate dose groups shall be subjected to histopathological examination for evidence of infection, since this provides a convenient assessment of the state of health of the animals.

(vi) When a satellite group is used, histopathology shall be performed on

tissues and organs identified as showing effects in the treated groups.

(f) *Data and reporting*—(1) *Treatment of results.* (i) Data shall be summarized in tabular form, showing for each test group the number of animals at the start of the test, the number of animals showing lesions, the types of lesions, and the percentage of animals displaying each type of lesion.

(ii) All observed results, quantitative and incidental, should be evaluated by an appropriate statistical method. Any generally accepted statistical method may be used; the statistical methods should be selected during the design of the study.

(2) *Evaluation of results.* The findings of a subchronic dermal toxicity study should be evaluated in conjunction with the findings of preceding studies and considered in terms of the observed toxic effects and the necropsy and histopathological findings. The evaluation should include the relationship between the dose of the test substance and the presence or absence, the incidence and severity, of abnormalities, including behavioral and clinical abnormalities, gross lesions, identified target organs, body weight changes, effect on mortality and any other general or specific toxic effects. A properly conducted subchronic test should provide a satisfactory estimation of a no-effect level.

(3) *Test report.* In addition to the reporting requirements as specified in the EPA Good Laboratory Practice Standards under 40 CFR part 792, subpart J, the following specific information shall be reported.

(i) *Group animal data.* Tabulation of toxic response data by species, strain, sex and exposure level for:

(A) Number of animals dying.

(B) Number of animals showing signs of toxicity.

(C) Number of animals exposed.

(ii) *Individual animal data.* (A) Date of death during the study or whether animals survived to termination.

(B) Date of observation of each abnormal sign and its subsequent course.

(C) Body weight data.

(D) Feed consumption data when collected.

(E) Hematological tests employed and all results.

(F) Clinical biochemistry tests employed and all results.

(G) Necropsy findings.

(H) Detailed description of all histopathological findings.

(I) Statistical treatment of results where appropriate.

(g) *References.* For additional background information on this test guideline the following references should be consulted:

(1) Draize, J.H. ''Dermal toxicity,'' *Appraisal of Chemicals in Food, Drugs and Cosmetics.* The Association of Food and Drug Officials of the United States (1959, 3rd printing 1975). pp. 46–59.

(2) Fitzhugh, O.G. ''Subacute toxicity,'' *Appraisal of the Safety of Chemicals in Foods, Drugs and Cosmetics.* The Association of Food and Drug Officials of the United States (1959, 3rd printing 1975). pp. 26–35.

(3) National Academy of Sciences. ''Principles and Procedures for Evaluating the Toxicity of Household Substances,'' a report prepared by the Committee for the Revision of NAS Publication 1138, under the auspices of the Committee on Toxicology, National Research Council, National Academy of Sciences, Washington, DC (1977).

(4) World Health Organization. ''Part I. Environmental Health Criteria 6,''*Principles and Methods for Evaluating the Toxicity of Chemicals.* (Geneva: World Health Organization, 1978).

[50 FR 39397, Sept. 27, 1985, as amended at 52 FR 19072, May 20, 1987; 53 FR 49149, Dec. 6, 1988; 54 FR 21064, May 16, 1989]

§ 798.2450 Inhalation toxicity.

(a) *Purpose.* In the assessment and evaluation of the toxic characteristics of a gas, volatile substance, or aerosol/particulate, determination of subchronic inhalation toxicity may be carried out after initial information on toxicity has been obtained by acute testing. The subchronic inhalation study has been designed to permit the determination of the no-observed-effect level and toxic effects associated with continuous or repeated exposure to a test substance for a period of 90 days. The test is not capable of determining those effects that have a long latency

period for development (e.g., carcinogenicity and life shortening). It provides information on health hazards likely to arise from repeated exposures by the inhalation route over a limited period of time. It will provide information on target organs, the possibilities of accumulation, and can be of use in selecting dose levels for chronic studies and for establishing safety criteria for human exposure. Hazards of inhaled substances are influenced by the inherent toxicity and by physical factors such as volatility and particle size.

(b) *Definitions.* (1) Subchronic inhalation toxicity is the adverse effects occurring as a result of the repeated daily exposure of experimental animals to a chemical by inhalation for part (approximately 10 percent) of a life span.

(2) Aerodynamic diameter applies to the size of particles of aerosols. It is the diameter of a sphere of unit density which behaves aerodynamically as the particle of the test substance. It is used to compare particles of different size and densities and to predict where in the respiratory tract such particles may be deposited. This term is used in contrast to measured or geometric diameter which is representative of actual diameters which in themselves cannot be related to deposition within the respiratory tract.

(3) The geometric mean diameter or the median diameter is the calculated aerodynamic diameter which divides the particles of an aerosol in half based on the weight of the particles. Fifty percent of the particles by weight will be larger than the median diameter and 50 percent of the particles will be smaller than the median diameter. The median diameter describes the particle size distribution of any aerosol based on the weight and size of the particles.

(4) Inhalable diameter refers to that aerodynamic diameter of a particle which is considered to be inhalable for the organism. It is used to refer to particles which are capable of being inhaled and may be deposited anywhere within the respiratory tract from the trachea to the alveoli. For man, inhalable diameter is considered as 15 micrometers or less.

(5) Dose refers to an exposure level. Exposure is expressed as weight or volume of test substance per volume of air (mg/l), or as parts per million (ppm).

(6) No-effect level/No-toxic-effect level/No-adverse-effect level/No-observed-effect level is the maximum dose used in a test which produces no observed adverse effects. A no-observed-effect level is expressed in terms of weight or volume of test substance given daily per unit volume of air (mg/l or ppm).

(7) Cumulative toxicity is the adverse effects of repeated doses occuring as a result of prolonged action on, or increased concentration of the administered test substance or its metabolites in susceptible tissues.

(c) *Principle of the test method.* Several groups of experimental animals are exposed daily for a defined period to the test substance in graduated concentrations, one concentration being used per group, for a period of 90 days. During the period of administration, the animals are observed daily to detect signs of toxicity. Animals which die during the test are necropsied and at the conclusion of the test, surviving animals are sacrificed and necropsied and appropriate histopathological examinations carried out.

(d) *Test procedures*—(1) *Animal selection*—(i) *Species and strain.* A mammalian species shall be used for testing. A variety of rodent species may be used, although the rat is the preferred species. Commonly used laboratory strains shall be employed. If another mammalian species is used, the tester shall provide justification/ reasoning for its selection.

(ii) *Age.* Young adult animals shall be used. At the commencement of the study the weight variation of animals shall not exceed ±20 percent of the mean weight for each sex.

(iii) *Sex.* (A) Equal numbers of animals of each sex shall be used at each dose level.

(B) Females shall be nulliparous and nonpregnant.

(iv) *Numbers.* (A) At least 20 rodents (10 females and 10 males) shall be used for each test group. If another mammalian species is selected (e.g. dog, rabbit, or non-human primate), at least 8 animals (4 males and 4 females) shall be used.

(B) If interim sacrifices are planned, the number of animals shall be increased by the number of animals scheduled to be sacrificed before the completion of the study.

(2) *Control groups.* A concurrent control group is required. This group shall be an untreated or sham-treated control group. Except for treatment with the test substance, animals in the control group shall be handled in a manner identical to the test group animals. Where a vehicle is used to help generate an appropriate concentration of the substance in the atmosphere, a vehicle control group shall be used. If the toxic properties of the vehicle are not known or cannot be made available, both untreated and vehicle control groups are required.

(3) *Satellite group.* A satellite group of 20 animals (10 animals per sex) may be treated with the high concentration level for 90 days and observed for reversibility, persistence, or delayed occurrence of toxic effects for a post-treatment period of appropriate length, normally not less than 28 days.

(4) *Dose levels and dose selection.* (i) In subchronic toxicity tests, it is desirable to have a concentration-response relationship as well as a no-observed-toxic-effect level. Therefore, at least 3 concentration levels with a control and, where appropriate, a vehicle control (corresponding to the concentration of vehicle at the highest exposure level) shall be used. Concentrations should be spaced appropriately to produce test groups with a range of toxic effects. The data should be sufficient to produce a concentration-response curve.

(ii) The highest concentration should result in toxic effects but not produce an incidence of fatalities which would prevent a meaningful evaluation.

(iii) The lowest concentration should not produce any evidence of toxicity. Where there is a usable estimation of human exposure the lowest concentration should exceed this.

(iv) Ideally, the intermediate concentration level(s) should produce minimal observable toxic effects. If more than one intermediate concentration level is used, the concentrations should be spaced to produce a gradation of toxic effects.

(v) In the low and intermediate groups and in the controls the incidence of fatalities should be low, to permit a meaningful evaluation of the results.

(vi) In the case of potentially explosive test substances, care should be taken to avoid generating explosive concentrations.

(5) *Exposure conditions.* The animals should be exposed to the test substance, ideally for 6 hours per day on a 7-day per week basis, for a period of 90 days. However, based primarily on practical considerations, exposure on a 5-day-per-week basis for 6 hours per day is the minimum acceptable exposure period.

(6) *Observation period.* (i) Duration of observation shall be for at least 90 days.

(ii) Animals in a satellite group scheduled for followup observations should be kept for at least 28 days further without treatment to detect recovery from, or persistence of, toxic effects.

(7) *Inhalation exposure.* (i) The animals shall be tested in inhalation equipment designed to sustain a minimum dynamic air flow of 12 to 15 air changes per hour and ensure an adequate oxygen content of 19 percent and an evenly distributed exposure atmosphere. Where a chamber is used, its design should minimize crowding of the test animals and maximize their exposure to the test substance. This is best accomplished by individual caging. To ensure stability of a chamber atmosphere, the total ''volume'' of the test animals shall not exceed 5 percent of the volume of the test chamber. Oronasal or head-only exposure may be used if it is desirable to avoid concurrent exposure by the dermal or oral routes.

(ii) A dynamic inhalation system with a suitable flow control system shall be used. The rate of air flow shall be adjusted to ensure that conditions throughout the exposure chamber are essentially the same. Maintenance of slight negative pressure inside the chamber will prevent leakage of the test substance into surrounding areas.

(iii) The temperature at which the test is performed should be maintained

at 22 °C (±2°). Ideally, the relative humidity should be maintained between 40 to 60 percent, but in certain instances (e.g., tests of aerosols, use of water vehicle) this may not be practicable.

(8) *Physical measurements.* Measurements or monitoring shall be made of the following:

(i) The rate of air flow shall be monitored continuously and recorded at least every 30 minutes.

(ii) The actual concentrations of the test substance shall be measured in the breathing zone. During the exposure period the actual concentrations of the test substance shall be held as constant as practicable, monitored continuously or intermittently depending on the method of analysis, and recorded at least at the beginning, at an intermediate time, and at the end of the exposure period.

(iii) During the development of the generating system, particle size analysis shall be performed to establish the stability of aerosol concentrations with respect to particle size. During exposure, analysis shall be conducted as often as necessary to determine the consistency of particle size distribution.

(iv) Temperature and humidity shall be monitored continuously but shall be recorded at least every 30 minutes.

(9) *Feed and water during exposure period.* Feed shall be withheld during exposure. Water may also be withheld during exposure.

(10) *Observation of animals.* (i) Each animal shall be observed daily and, if necessary, handled to appraise its physical condition.

(ii) Additional observations should be made daily with appropriate actions taken to minimize loss of animals to the study (e.g., necropsy or refrigeration of those animals found dead and isolation or sacrifice of weak or moribund animals).

(iii) Signs of toxicity shall be recorded as they are observed including the time of onset, the degree, and duration.

(iv) Cage-side observations should include, but not be limited to, changes in the skin and fur, eyes and mucous membranes, respiratory, circulatory, autonomic and central nervous systems, somatomotor activity and behavior pattern.

(v) Animals shall be weighed weekly. Feed consumption shall also be determined weekly if abnormal body weight changes are observed.

(vi) At the end of the study period all survivors in the nonsatellite treatment groups shall be sacrificed. Moribund animals shall be removed and sacrificed when noticed.

(11) *Clinical examinations.* (i) The following examinations shall be made on all animals of each sex in each group:

(A) Certain hematology determinations shall be carried out at least two times during the test period on all groups of animals including concurrent controls: After 30 days of test and just prior to terminal sacrifice at the end of the test period. Hematology determinations which are appropriate to all studies: Hematocrit, hemoglobin concentration, erythrocyte count, total and differential leukocyte count, and a measure of clotting potential such as clotting time, prothrombin time, thromboplastin time, or platelet count.

(B) Certain clinical biochemistry determinations on blood should be carried out at least two times during the test period on all groups of animals including concurrent controls: After 30 days of test and just prior to terminal sacrifice at the end of the test period. Clinical biochemistry test areas which are considered appropriate to all studies: Electrolyte balance, carbohydrate metabolism, and liver and kidney function. The selection of specific tests will be influenced by observations on the mode of action of the substance. Suggested determinations: calcium, phosphorus, chloride, sodium, potassium, fasting glucose (with period of fasting appropriate to the species), serum glutamic-pyruvic transaminase, (now known as serum alanine aminotransferase), serum glutamic-oxaloacetic transaminase (now known as serum aspartate aminotransferase), ornithine decarboxylase, gamma glutamyl transpeptidase, urea nitrogen, albumen, blood creatinine, total bilirubin, and total serum protein measurements. Other determinations which may be necessary for an adequate toxicological evaluation include: Analyses of lipids, hormones, acid/base

balance, methemoglobin, and cholinesterase activity. Additional clinical biochemistry may be employed, where necessary, to extend the investigation of observed effects.

(ii) The following examinations shall be made on high dose and control groups. If changes in the eyes are detected, all animals shall be examined:

(A) Ophthalmological examination, using an ophthalmoscope or equivalent suitable equipment, shall be made prior to exposure to the test substance and at the termination of the study.

(B) Urinalysis is not recommended on a routine basis, but only when there is an indication based on expected and/or observed toxicity.

(12) *Gross pathology*. (i) All animals shall be subjected to a full gross necropsy which includes examination of the external surface of the body, all orifices and the cranial, thoracic, and abdominal cavities and their contents.

(ii) At least the liver, kidneys, adrenals, brain, and gonads shall be weighed wet, as soon as possible after dissection to avoid drying. In addition, for the rodent, the brain; for the nonrodent, the thyroid with parathyroids also shall be weighed wet.

(iii) The following organs and tissues, or representative samples thereof, shall be preserved in a suitable medium for possible future histopathological examination: All gross lesions; lungs—which should be removed intact, weighed, and treated with a suitable fixative to ensure that lung structure is maintained (perfusion with the fixative is considered to be an effective procedure); nasopharyngeal tissues; brain—including sections of medulla/pons cerebellar cortex and cerebral cortex; pituitary; thyroid/parathyroid; thymus; trachea; heart; sternum with bone marrow; salivary glands; liver; spleen; kidneys; adrenals; pancreas; gonads; uterus; accessory genital organs (epididymis, prostate, and, if present, seminal vesicles); aorta; (skin); gall bladder (if present); esophagus; stomach; duodenum; jejunum; ileum; cecum; colon; rectum; urinary bladder; representative lymph node; (mammary gland); (thigh musculature); peripheral nerve; (eyes); (femur—including articular surface); (spinal cord at three levels—cervical, midthoracic, and lumbar); and (zymbal and exorbital lachrymal glands).

(13) *Histopathology*. The following histopathology shall be performed:

(i) Full histopathology on the respiratory tract and other organs and tissues, listed above, of all animals in the control and high dose groups.

(ii) All gross lesions in all animals.

(iii) Target organs in all animals.

(iv) The tissues mentioned in brackets (listed above) if indicated by signs of toxicity or target organ involvement.

(v) Lungs of animals (rodents) in the low and intermediate dose groups shall also be subjected to histopathological examination, primarily for evidence of infection since this provides a convenient assessment of the state of health of the animals.

(vi) When a satellite group is used, histopathology shall be performed on tissues and organs identified as showing effects in the treated groups.

(e) *Data and reporting*—(1) *Treatment of results*. (i) Data shall be summarized in tabular form, showing for each test group the number of animals at the start of the test, the number of animals showing lesions, the types of lesions, and the percentage of animals displaying each type of lesion.

(ii) All observed results, quantitative and incidental, should be evaluated by an appropriate statistical method. Any generally accepted statistical method may be used; the statistical methods should be selected during the design of the study.

(2) *Evaluation of results*. The findings of the subchronic inhalation toxicity study should be evaluated in conjunction with the findings of preceding studies and considered in terms of the observed toxic effects and the necropsy and histopathological findings. The evaluation will include the relationship between the concentration of the test substance and duration of exposure, and the presence or absence, the incidence and severity, of abnormalities, including behavioral and clinical abnormalities, gross lesions, identified target organs, body weight changes, effects on mortality and any other general or specific toxic effects. A properly

conducted subchronic test should provide a satisfactory estimation of a no-effect level.

(3) *Test report.* In addition to the reporting requirements as specified under EPA Good Laboratory Practice Standards, 40 CFR part 792, subpart J, the following specific information shall be reported:

(i) *Test conditions.* (A) Description of exposure apparatus, including design, type, dimensions, source of air, system for generating particulates and aerosols, method of conditioning air, treatment of exhaust air, and the method of housing animals in a test chamber.

(B) The equipment for measuring temperature, humidity, and particulate aerosol concentrations and size shall be described.

(ii) *Exposure data.* These shall be tabulated and presented with mean values and measure of variability (e.g., standard deviation) and shall include:

(A) Airflow rates through the inhalation equipment.

(B) Temperature and humidity of air.

(C) Nominal concentration (total amount of test substance fed into the inhalation equipment divided by volume of air).

(D) Actual concentration in test breathing zone.

(E) Particle size distribution (e.g., median aerodynamic diameter of particles with standard deviation from the mean).

(iii) *Group animal data.* Tabulation of toxic response data by species, strain, sex, and exposure level for:

(A) Number of animals dying.

(B) Number of animals showing signs of toxicity.

(C) Number of animals exposed.

(iv) *Individual animal data.* (A) Date of death during the study or whether animals survived to termination.

(B) Date of observation of each abnormal sign and its subsequent course.

(C) Body weight data.

(D) Feed consumption data when collected.

(E) Hematological tests employed and all results.

(F) Clinical biochemistry tests employed and all results.

(G) Necropsy findings.

(H) Detailed description of all histopathological findings.

(I) Statistical treatment of results where appropriate.

(f) *References.* For additional background information on this test guideline the following references should be consulted:

(1) Cage, J.C. ''Experimental Inhalation Toxicology,'' *Methods in Toxicology*. Ed. G.E. Paget. (Philadelphia: F.A. Davis Co. 1970, pp. 258–277.

(2) Casarett, L.J., Doull, J. ''Chapter 9.'' *Toxicology: The Basic Science of Poisons* (New York: Macmillan Publishing Co. Inc. 1975).

(3) MacFarland, H.N. ''Respiratory Toxicology,'' *Essays in Toxicology*. Ed. W.J. Hayes. Vol. 7 (New York: Academic Press, 1976) pp. 121–154.

(4) National Academy of Sciences. ''Principles and Procedures for Evaluating the Toxicity of Household Substances,'' a report prepared by the Committee for the Revision of NAS Publication 1138, under the auspices of the Committee on Toxicology, National Research Council, National Academy of Sciences, Washington, DC (1977).

(5) World Health Organization. ''Part I. Environmental Health Criteria 6,'' *Principles and Methods for Evaluating the Toxicity of Chemicals.* (Geneva: World Health Organization, 1978).

[50 FR 39397, Sept. 27, 1985, as amended at 52 FR 19073, May 20, 1987; 52 FR 26150, July 13, 1987; 53 FR 49150, Dec. 6, 1988; 54 FR 21064, May 16, 1989]

§ 798.2650 Oral toxicity.

(a) *Purpose.* In the assessment and evaluation of the toxic characteristics of a chemical, the determination of subchronic oral toxicity may be carried out after initial information on toxicity has been obtained by acute testing. The subchronic oral study has been designed to permit the determination of the no-observed-effect level and toxic effects associated with continuous or repeated exposure to a test substance for a period of 90 days. The test is not capable of determining those effects that have a long latency period for development (e.g., carcinogenicity and life shortening). It provides information on health hazards likely to arise from repeated exposure

by the oral route over a limited period of time. It will provide information on target organs, the possibilities of accumulation, and can be of use in selecting dose levels for chronic studies and for establishing safety criteria for human exposure.

(b) *Definitions.* (1) Subchronic oral toxicity is the adverse effects occurring as a result of the repeated daily exposure of experimental animals to a chemical by the oral route for a part (approximately 10 percent) of a life span.

(2) Dose is the amount of test substance administered. Dose is expressed as weight of test substance (g, mg) per unit weight of test animal (e.g., mg/kg), or as weight of test substance per unit weight of food or drinking water.

(3) No-effect level/No-toxic-effect level/No-adverse-effect level/No-observed-effect level is the maximum dose used in a test which produces no observed adverse effects. A no-observed-effect level is expressed in terms of the weight of a substance given daily per unit weight of test animal (mg/kg). When administered to animals in food or drinking water the no-observed-effect level is expressed as mg/kg of food or mg/ml of water.

(4) Cumulative toxicity is the adverse effects of repeated doses occurring as a result of prolonged action on, or increased concentration of, the administered test substance or its metabolites in susceptible tissue.

(c) *Principle of the test method.* The test substance is administered orally in graduated daily doses to several groups of experimental animals, one dose level per group, for a period of 90 days. During the period of administration the animals are observed daily to detect signs of toxicity. Animals which die during the period of administration are necropsied. At the conclusion of the test all animals are necropsied and histo-pathological examinations carried out.

(d) *Limit test.* If a test at one dose level of at least 1,000 mg/kg body weight (expected human exposure may indicate the need for a higher dose level), using the procedures described for this study, produces no observable toxic effects and if toxicity would not be expected based upon data of structurally related compounds, then a full study using three dose levels might not be necessary.

(e) *Test procedures*—(1) *Animal selection*—(i) *Species and strain.* A mammalian species shall be used for testing. A variety of rodent species may be used, although the rat is the preferred species. Commonly used laboratory strains shall be employed. The commonly used nonrodent species is the dog, preferably of a defined breed; the beagle is frequently used. If other mammalian species are used, the tester shall provide justification/reasoning for his or her selection.

(ii) *Age*—(A) *General.* Young adult animals shall be employed. At the commencement of the study the weight variation of animals used shall not exceed ±20 percent of the mean weight for each sex.

(B) *Rodents.* Dosing shall begin as soon as possible after weaning, ideally before the rats are 6, and in any case, not more than 8 weeks old.

(C) *Non-rodent.* In the case of the dog, dosing shall commence after acclimatization, preferably at 4 to 6 months and not later than 9 months of age.

(iii) *Sex.* (A) Equal numbers of animals of each sex shall be used at each dose level.

(B) The females shall be nulliparous and nonpregnant.

(iv) *Numbers*—(A) *Rodents.* At least 20 animals (10 females and 10 males) shall be used at each dose level.

(B) *Non-rodents.* At least eight animals (four females and four males) shall be used at each dose level.

(C) If interim sacrifices are planned, the number shall be increased by the number of animals scheduled to be sacrificed before the completion of the study.

(2) *Control groups.* A concurrent control group is required. This group shall be an untreated or sham-treated control group or, if a vehicle is used in administering the test substance, a vehicle control group. If the toxic properties of the vehicle are not known or cannot be made available, both untreated and vehicle control groups are required.

(3) *Satellite group.* (Rodent) A satellite group of 20 animals (10 animals per sex) may be treated with the high dose level

for 90 days and observed for reversibility, persistence, or delayed occurrence of toxic effects for a post-treatment period of appropriate length, normally not less than 28 days.

(4) *Dose levels and dose selection.* (i) In subchronic toxicity tests, it is desirable to have a dose response relationship as well as a no-observed-toxic-effect level. Therefore, at least 3 dose levels with a control and, where appropriate, a vehicle control (corresponding to the concentration of vehicle at the highest exposure level) shall be used. Doses should be spaced appropriately to produce test groups with a range of toxic effects. The data should be sufficient to produce a dose-response curve.

(ii) The highest dose level in rodents should result in toxic effects but not produce an incidence of fatalities which would prevent a meaningful evaluation; for non-rodents there should be no fatalities.

(iii) The lowest dose level should not produce any evidence of toxicity. Where there is a usable estimation of human exposure the lowest dose level should exceed this.

(iv) Ideally, the intermediate dose level(s) should produce minimal observable toxic effects. If more than one intermediate dose is used, the dose levels should be spaced to produce a gradation of toxic effects.

(v) For rodents, the incidence of fatalities in low and intermediate dose groups and in the controls should be low, to permit a meaningful evaluation of the results; for non-rodents, there should be no fatalities.

(5) *Exposure conditions.* The animals are dosed with the test substance ideally on a 7-day per week basis over a period of 90 days. However, based primarily on practical considerations, dosing in gavage or capsule studies on a 5-day per week basis is considered to be acceptable.

(6) *Observation period.* (i) Duration of observation shall be for at least 90 days.

(ii) Animals in the satellite group scheduled for followup observations should be kept for at least 28 days further without treatment to detect recovery from, or persistence of, toxic effects.

(7) *Administration of the test substance.* (i) The test substance may be administered in the diet or in capsules. In addition, for rodents it may also be administered by gavage or in the drinking water.

(ii) All animals shall be dosed by the same method during the entire experimental period.

(iii) Where necessary, the test substance is dissolved or suspended in a suitable vehicle. If a vehicle or diluent is needed, ideally it should not elicit important toxic effects itself nor substantially alter the chemical or toxicological properties of the test substance. It is recommended that wherever possible the usage of an aqueous solution be considered first, followed by consideration of a solution of oil and then by possible solution in other vehicles.

(iv) For substances of low toxicity, it is important to ensure that when administered in the diet the quantities of the test substance involved do not interfere with normal nutrition. When the test substance is administered in the diet either a constant dietary concentration (ppm) or a constant dose level in terms of the animals' body weight shall be used; the alternative used shall be specified.

(v) For a substance administered by gavage or capsule, the dose shall be given at approximately the same time each day, and adjusted at intervals (weekly or bi-weekly) to maintain a constant dose level in terms of animal body weight.

(8) *Observation of animals.* (i) Each animal shall be observed daily and, if necessary, handled to appraise its physical condition.

(ii) Additional observations shall be made daily with appropriate actions taken to minimize loss of animals to the study (e.g., necropsy or refrigeration of those animals found dead and isolation or sacrifice of weak or moribund animals).

(iii) Signs of toxicity shall be recorded as they are observed including the time of onset, degree and duration.

(iv) Cage-side observations shall include, but not be limited to, changes in skin and fur, eyes and mucous membranes, respiratory, circulatory, autonomic and central nervous systems,

somatomotor activity and behavior pattern.

(v) Measurements shall be made weekly of feed consumption or water consumption when the test substance is administered in the feed or drinking water, respectively.

(vi) Animals shall be weighed weekly.

(vii) At the end of the 90-day period all survivors in the nonsatellite treatment groups shall be sacrificed. Moribund animals shall be removed and sacrificed when noticed.

(9) *Clinical examinations.* (i) The following examinations shall be made on all animals of each sex in each group for rodents and all animals when nonrodents are used as test animals.

(A) Certain hematology determinations shall be carried out at least two times during the test period on all groups of animals including concurrent controls: After 30 days of test and just prior to terminal sacrifice at the end of the test period. Hematology determinations which are appropriate to all studies: Hematocrit, hemoglobin concentration, erythrocyte count, total and differential leukocyte count, and a measure of clotting potential such as clotting time, prothrombin time, thromboplastin time, or platelet count.

(B) Certain clinical biochemistry determinations on blood should be carried out at least two times during the test period on all groups of animals including concurrent controls: After 30 days of test and just prior to terminal sacrifice at the end of the test period. Clinical biochemistry test areas which are considered appropriate to all studies: Electrolyte balance, carbohydrate metabolism, and liver and kidney function. The selection of specific tests will be influenced by observations on the mode of action of the substance. Suggested determinations: Calcium, phosphorus, chloride, sodium, potassium, fasting glucose (with period of fasting appropriate to the species), serum glutamic-pyruvic transaminase (now known as serum alanine aminotransferase), serum glutamic oxaloacetic transaminase (now known as serum aspartate aminotransferase), ornithine decarboxylase, gamma glutamyl transpeptidase, urea nitrogen, albumen, blood creatinine, total bilirubin, and total serum protein measurements. Other determinations which may be necessary for an adequate toxicological evaluation include: Analyses of lipids, hormones, acid/base balance, methemoglobin, and cholinesterase activity. Additional clinical biochemistry may be employed, where necessary, to extend the investigation of observed effects.

(ii) The following examinations shall be made on high dose and control groups. If changes in the eyes are detected, all animals should be examined.

(A) Ophthalmological examination, using an ophthalmoscope or equivalent suitable equipment, shall be made prior to the administration of the test substance and at the termination of the study.

(B) Urinalysis is not recommended on a routine basis, but only when there is an indication based on expected and or observed toxicity.

(10) *Gross necropsy.* (i) All animals shall be subjected to a full gross necropsy which includes examination of the external surface of the body, all orifices, and the cranial, thoracic and abdominal cavities and their contents.

(ii) At least the liver, kidneys, adrenals, and gonads shall be weighed wet, as soon as possible after dissection to avoid drying. In addition, for the rodent, the brain; for the non-rodent, the thyroid with parathyroids also shall be weighed wet.

(iii) The following organs and tissues, or representative samples thereof, shall be preserved in a suitable medium for possible future histopathological examination: All gross lesions; lungs—which should be removed intact, weighed, and treated with a suitable fixative to ensure that lung structure is maintained (perfusion with the fixative is considered to be an effective procedure); nasopharyngeal tissues; brain—including sections of medulla/pons, cerebellar cortex, and cerebral cortex; pituitary; thyroid/parathyroid; thymus; trachea; heart; sternum with bone marrow; salivary glands; liver; spleen; kidneys; adrenals; pancreas; gonads; uterus; accessory genital organs (epididymis, prostate, and, if present, seminal vesicles); aorta; (skin); gall bladder (if present); esophagus; stomach; duodenum; jejunum; ileum; cecum; colon;

rectum; urinary bladder; representative lymph node; (mammary gland); (thigh musculature); peripheral nerve; (eyes); (femur—including articular surface); (spinal cord at three levels—cervical, midthoracic, and lumbar); and (zymbal and exorbital lachrymal glands); and (rodent-zymbal glands).

(11) *Histopathology.* The following histopathology shall be performed:

(i) Full histopathology on the organs and tissues, listed above, of all rodents in the control and high dose groups, all non-rodents, and all rodents that died or were killed during the study.

(ii) All gross lesions in all animals.

(iii) Target organs in all animals.

(iv) The tissues mentioned in brackets (listed above) if indicated by signs of toxicity of target organ involvement.

(v) Lungs, liver and kidneys of all animals. Special attention to examination of the lungs of rodents shall be made for evidence of infection since this provides a convenient assessment of the state of health of the animals.

(vi) When a satellite group is used (rodents), histopathology shall be performed on tissues and organs identified as showing effects in the treated groups.

(f) *Data and reporting*—(1) *Treatment of results.* (i) Data shall be summarized in tabular form, showing for each test group the number of animals at the start of the test, the number of animals showing lesions, the types of lesions and the percentage of animals displaying each type of lesion.

(ii) All observed results, quantitative and incidental, should be evaluated by an appropriate statistical method. Any generally accepted statistical methods may be used; the statistical methods should be selected during the design of the study.

(2) *Evaluation of the study results.* (i) The findings of a subchronic oral toxicity study should be evaluated in conjunction with the findings of preceding studies and considered in terms of the toxic effects and the necropsy and histopathological findings. The evaluation will include the relationship between the dose of the test substance and the presence or absence, the incidence and severity, of abnormalities, including behavioral and clinical abnormalities, gross lesions, identified target organs, body weight changes, effects on mortality and any other general or specific toxic effects. A properly conducted subchronic test should provide a satisfactory estimation of a no-effect level.

(ii) In any study which demonstrates an absence of toxic effects, further investigation to establish absorption and bioavailability of the test substance should be considered.

(3) *Test report.* In addition to the reporting requirements as specified under EPA Good Laboratory Practice Standards, 40 CFR part 792, subpart J, the following specific information shall be reported:

(i) *Group animal data.* Tabulation of toxic response data by species, strain, sex and exposure level for:

(A) Number of animals dying.

(B) Number of animals showing signs of toxicity.

(C) Number of animals exposed.

(ii) *Individual animal data.* (A) Date of death during the study or whether animals survived to termination.

(B) Date of observation of each abnormal sign and its subsequent course.

(C) Body weight data.

(D) Feed consumption data when collected.

(E) Hematological tests employed and all results.

(F) Clinical biochemistry tests employed and all results.

(G) Necropsy findings.

(H) Detailed description of all histopathological findings.

(I) Statistical treatment of results where appropriate.

(g) *References.* For additional background information on this test guideline the following references should be consulted:

(1) Boyd, E.M. ''Chapter 14—Pilot Studies, 15—Uniposal Clinical Parameters, 16—Uniposal Autopsy Parameters.'' *Predictive Toxicometrics.* (Baltimore: Williams and Wilkins, 1972).

(2) Fitzhugh, O.G. ''Subacute Toxicity,'' *Appraisal of the Safety of Chemicals in Foods, Drugs and Cosmetics.* The Association of Food and Drug Officials of the United States (1959, 3rd Printing 1975) pp. 26–35.

(3) Food Safety Council. ''Subchronic Toxicity Studies,'' *Proposed System for*

Food Safety Assessment. (Columbia: Food Safety Council, 1978) pp. 83–96.

(4) National Academy of Sciences. ''Principles and Procedures for Evaluating the Toxicity of Household Substances,'' a report prepared by the Committee for the Revision of NAS Publication 1138, under the auspices of the Committee on Toxicology, National Research Council, National Academy of Sciences, Washington, DC (1977).

(5) World Health Organization. ''Part I. Environmental Health Criteria 6,'' *Principles and Methods for Evaluating the Toxicity of Chemicals.* (Geneva: World Health Organization, 1978).

[50 FR 39397, Sept. 27, 1985, as amended at 52 FR 19074, May 20, 1987; 53 FR 49150, Dec. 6, 1988; 54 FR 21064, May 16, 1989]

Subpart D—Chronic Exposure

§ 798.3260 Chronic toxicity.

(a) *Purpose.* The objective of a chronic toxicity study is to determine the effects of a substance in a mammalian species following prolonged and repeated exposure. Under the conditions of the chronic toxicity test, effects which require a long latency period or which are cumulative should become manifest. The application of this guideline should generate data on which to identify the majority of chronic effects and shall serve to define long term dose-response relationships. The design and conduct of chronic toxicity tests should allow for the detection of general toxic effects, including neurological, physiological, biochemical, and hematological effects and exposure-related morphological (pathology) effects.

(b) *Test procedures*—(1) *Animal selection*—(i) *Species and strain.* Testing should be performed with two mammalian species, one a rodent and another a non-rodent. The rat is the preferred rodent species and the dog is the preferred non-rodent species. Commonly used laboratory strains should be employed. If other mammalian species are used, the tester should provide justification/reasoning for their selection.

(ii) *Age.* (A) Dosing of rats should begin as soon as possible after weaning, ideally before the rats are 6, but in no case more than 8 weeks old.

(B) Dosing of dogs should begin between 4 and 6 months of age and in no case later than 9 months of age.

(C) At commencement of the study the weight variation of animals used should not exceed ±20 percent of the mean weight for each sex.

(iii) *Sex.* (A) Equal numbers of animals of each sex should be used at each dose level.

(B) The females should be nulliparous and non-pregnant.

(iv) *Numbers.* (A) For rodents, at least 40 animals (20 females and 20 males) and for non-rodents (dogs) at least 8 animals (4 females and 4 males) should be used at each dose level.

(B) If interim sacrifices are planned, the number should be increased by the number of animals scheduled to be sacrificed during the course of the study.

(C) The number of animals at the termination of the study must be adequate for a meaningful and valid statistical evaluation of chronic effects.

(2) *Control groups.* (i) A concurrent control group is suggested. This group should be an untreated or sham treated control group or, if a vehicle is used in administering the test substance, a vehicle control group. If the toxic properties of the vehicle are not known or cannot be made available, both untreated and vehicle control groups are strongly suggested.

(ii) In special circumstances such as in inhalation studies involving aerosols or the use of an emulsifier of uncharacterized biological activity in oral studies, a concurrent negative control group should be utilized. The negative control group should be treated in the same manner as all other test animals except that this control group should not be exposed to either the test substance or any vehicle.

(3) *Dose levels and dose selections.* (i) In chronic toxicity tests, it is necessary to have a dose-response relationship as well as a no-observed-toxic-effect level. Therefore, at least three dose levels should be used in addition to the concurrent control group. Dose levels should be spaced to produce a gradation of effects.

(ii) The high dose level in rodents should elicit some signs of toxicity without causing excessive lethality; for non-rodents, there should be signs of

toxicity but there should be no fatalities.

(iii) The lowest dose level should not produce any evidence of toxicity. Where there is a usable estimation of human exposure the lowest dose level should exceed this even though this dose level may result in some signs of toxicity.

(iv) Ideally, the intermediate dose level(s) should produce minimal observable toxic effects. If more than one intermediate dose is used, the dose level should be spaced to produce a gradation of toxic effects.

(v) For rodents, the incidence of fatalities in low and intermediate dose groups and in the controls should be low to permit a meaningful evaluation of the results. For non-rodents, there should be no fatalities.

(4) *Exposure conditions.* The animals are dosed with the test substance ideally on a 7-day per week basis over a period of at least 12 months. However, based primarily on practical considerations, dosing on a 5-day per week basis is considered to be acceptable.

(5) *Observation period.* Duration of observation should be for at least 12 months, and may be concurrent with or subsequent to dosing. If there is a post-exposure observation period, an interim sacrifice should be performed on no fewer than half of the animals of each sex at each dose level immediately upon termination of exposure.

(6) *Administration of the test substance.* The three main routes of administration are oral, dermal, and inhalation. The choice of the route of administration depends upon the physical and chemical characteristics of the test substance and the form typifying exposure in humans.

(i) *Oral studies.* (A) The animals should receive the test substance in their diet, dissolved in drinking water, or given by gavage or capsule for a period of at least 12 months.

(B) If the test substance is administered in the drinking water, or mixed in the diet, exposure is continuous.

(C) For a diet mixture, the highest concentration should not exceed 5 percent.

(ii) *Dermal studies.* (A) The animals are treated by topical application with the test substance, ideally for at least 6 hours per day.

(B) Fur should be clipped from the dorsal area of the trunk of the test animals. Care must be taken to avoid abrading the skin which could alter its permeability.

(C) The test substance should be applied uniformly over a shaved area which is approximately 10 percent of the total body surface area. With highly toxic substances, the surface area covered may be less, but as much of the area should be covered with as thin and uniform a film as possible.

(D) During the exposure period, the test substance may be held if necessary, in contact with the skin with a porous gauze dressing and non-irritating tape. The test site should be further covered in a suitable manner to retain the gauze dressing and test substance and ensure that the animals cannot ingest the test substance.

(iii) *Inhalation studies.* (A) The animals should be tested with inhalation equipment designed to sustain a dynamic air flow of 12 to 15 air changes per hour, ensure an adequate oxygen content of 19 percent and an evenly distributed exposure atmosphere. Where a chamber is used, its design should minimize crowding of the test animals and maximize their exposure to the test substance. This is best accomplished by individual caging. As a general rule to ensure stability of a chamber atmosphere, the total ''volume'' of the test animals should not exceed 5 percent of the volume of the test chamber. Alternatively, oro-nasal, head-only or whole body individual chamber exposure may be used.

(B) The temperature at which the test is performed should be maintained at 22 °C (±2°). Ideally, the relative humidity should be maintained between 40 to 60 percent, but in certain instances (e.g., tests of aerosols, use of water vehicle) this may not be practicable.

(C) Feed and water should be withheld during each daily 6 hour exposure period.

(D) A dynamic inhalation system with a suitable analytical concentration control system should be used. The rate of air flow should be adjusted to ensure that conditions throughout

the equipment are essentially the same. Maintenance of slight negative pressure inside the chamber will prevent leakage of the test substance into the surrounding areas.

(7) *Observation of animals.* (i) Each animal should be handled and its physical condition appraised at least once each day.

(ii) Additional observations should be made daily with appropriate actions taken to minimize loss of animals to the study (e.g., necropsy or refrigeration of those animals found dead and isolation or sacrific of weak or moribund animals).

(iii) Clinical signs of toxicity including suspected tumors and mortality should be recorded as they are observed, including the time of onset, the degree and duration.

(iv) Cage-side observations should include, but not be limited to, changes in skin and fur, eyes and mucous membranes, respiratory, circulatory, autonomic and central nervous systems, somatomotor activity and behavior pattern.

(v) Body weights should be recorded individually for all animals once a week during the first 13 weeks of the test period and at least once every 4 weeks thereafter unless signs of clinical toxicity suggest more frequent weighings to facilitate monitoring of health status.

(vi) When the test substance is administered in the feed or drinking water, measurements of feed or water consumption, respectively, should be determined weekly during the first 13 weeks of the study and then at approximately monthly intervals unless health status or body weight changes dictate otherwise.

(vii) At the end of the study period all survivors should be sacrificed. Moribund animals should be removed and sacrificed when noticed.

(8) *Physical measurements.* For inhalation studies, measurements or monitoring should be made of the following:

(i) The rate of air flow should be monitored continuously, but should be recorded at intervals of at least once every 30 minutes.

(ii) During each exposure period the actual concentrations of the test substance should be held as constant as practicable, monitored continuously and measured at least three times during the test period: at the beginning, at an intermediate time and at the end of the period.

(iii) During the development of the generating system, particle size analysis should be performed to establish the stability of aerosol concentrations. During exposure, analysis should be conducted as often as necessary to determine the consistency of particle size distribution and homogeneity of the exposure stream.

(iv) Temperature and humidity should be monitored continuously, but should be recorded at intervals of at least once every 30 minutes.

(9) *Clinical examinations.* The following examinations should be made on at least 10 rats of each sex per dose and on all non-rodents.

(i) Certain hematology determinations (e.g., hemoglobin content, packed cell volume, total red blood cells, total white blood cells, platelets, or other measures of clotting potential) should be performed at termination and should be performed at 3 months, 6 months and at approximately 6 month intervals thereafter (for studies extending beyond 12 months) on blood samples collected from all non-rodents and from 10 rats per sex of all groups. These collections should be from the same animals at each interval. If clinical observations suggest a deterioration in health of the animals during the study, a differential blood count of the affected animals should be performed. A differential blood count should be performed on samples from those animals in the highest dosage group and the controls. Differential blood counts should be performed for the next lower group(s) if there is a major discrepancy between the highest group and the controls. If hematological effects were noted in the subchronic test, hematological testing should be performed at 3, 6, 12, 18, and 24 months for a two year study and at 3, 6, and 12 months for a 1-year study.

(ii) Certain clinical biochemistry determinations on blood should be carried out at least three times during the test period: just prior to initiation of dosing (base line data), near the middle and at the end of the test period. Blood

samples should be drawn for clinical chemistry measurements from all non-rodents and at least ten rodents per sex of all groups; if possible, from the same rodents at each time interval. Test areas which are considered appropriate to all studies: electrolyte balance, carbohydrate metabolism and liver and kidney function. The selection of specific tests will be influenced by observations on the mode of action of the substance and signs of clinical toxicity. Suggested chemical determinations: calcium, phosphorus, chloride, sodium, potassium, fasting glucose (with period of fasting appropriate to the species), serum glutamic-pyruvic transaminase (now known as serum alanine aminotransferase), serum glutamic oxaloacetic transaminase (now known as serum aspartate aminotransferase), ornithine decarboxylase, gamma glutamyl transpeptidase, blood urea nitrogen, albumen, blood creatinine, creatinine phosphokinase, total cholesterol, total bilirubin and total serum protein measurements. Other determinations which may be necessary for an adequate toxicological evaluation include analyses of lipids, hormones, acid/base balance, methemoglobin and cholinesterase activity. Additional clinical biochemistry may be employed where necessary to extend the investigation of observed effects.

(iii) Urine samples from rodents at the same intervals as the hematological examinations under paragraph (b)(9)(i) of this section should be collected for analysis. The following determinations should be made from either individual animals or on a pooled sample/sex/group for rodents: appearance (volume and specific gravity), protein, glucose, ketones, bilirubin, occult blood (semi-quantitatively); and microscopy of sediment (semi-quantitatively).

(iv) Ophthalmological examination, using an ophthalmoscope or equivalent suitable equipment, should be made prior to the administration of the test substance and at the termination of the study. If changes in eyes are detected all animals should be examined.

(10) *Gross necropsy*. (i) A complete gross examination should be performed on all animals, including those which died during the experiment or were killed in moribund conditions.

(ii) The liver, kidneys, adrenals, brain and gonads should be weighed wet, as soon as possible after dissection to avoid drying. For these organs, at least 10 rodents per sex per group and all non-rodents should be weighed.

(iii) The following organs and tissues, or representative samples thereof, should be preserved in a suitable medium for possible future histopathological examination: All gross lesions and tumors; brain—including sections of medulla/pons, cerebellar cortex, and cerebral cortex; pituitary; thyroid/parathyroid; thymus; lungs; trachea; heart; sternum and/or femur with bone marrow; salivary glands; liver; spleen; kidneys; adrenals; esophagus; stomach; duodenum; jejunum; ileum; cecum; colon; rectum; urinary bladder; representative lymph nodes; pancreas; gonads; uterus; accessory genital organs (epididymis, prostate, and, if present, seminal vesicles; female mammary gland; aorta; gall bladder (if present); skin; musculature; peripheral nerve; spinal cord at three levels—cervical, midthoracic, and lumbar; and eyes. In inhalation studies, the entire respiratory tract, including nose, pharynx, larynx, and paranasal sinuses should be examined and preserved. In dermal studies, skin from sites of skin painting should be examined and preserved.

(iv) Inflation of lungs and urinary bladder with a fixative is the optimal method for preservation of these tissues. The proper inflation and fixation of the lungs in inhalation studies is considered essential for appropriate and valid histopathological examination.

(v) If other clinical examinations are carried out, the information obtained from these procedures should be available before microscopic examination, since they may provide significant guidance to the pathologist.

(11) *Histopathology*. (i) The following histopathology should be performed:

(A) Full histopathology on the organs and tissues, listed above, of all non-rodents, of all rodents in the control and high dose groups and of all rodents that died or were killed during the study.

(B) All gross lesions in all animals.

(C) Target organs in all animals.

(D) Lungs, liver and kidneys of all animals. Special attention to examination of the lungs of rodents should be made for evidence of infection since this provides an assessment of the state of health of the animals.

(ii) If excessive early deaths or other problems occur in the high dose group compromising the significance of the data, the next dose level should be examined for complete histopathology.

(iii) In case the results of an experiment give evidence of substantial alteration of the animals' normal longevity or the induction of effects that might affect a toxic response, the next lower dose level should be examined fully, as described under paragraph (b)(11)(i) of this section.

(iv) An attempt should be made to correlate gross observations with microscopic findings.

(c) *Data and reporting*—(1) *Treatment of results.* (i) Data should be summarized in tabular form, showing for each test group the number of animals at the start of the test, the number of animals showing lesions, the types of lesions and the percentage of animals displaying each type of lesion.

(ii) All observed results, quantitative and incidental, should be evaluated by an appropriate statistical method. Any generally accepted statistical methods may be used; the statistical methods should be selected during the design of the study.

(2) *Evaluation of study results.* (i) The findings of a chronic toxicity study should be evaluated in conjunction with the findings of preceding studies and considered in terms of the toxic effects, the necropsy and histopathological findings. The evaluation will include the relationship between the dose of the test substance and the presence, incidence and severity of abnormalities (including behavioral and clinical abnormalities), gross lesions, identified target organs, body weight changes, effects on mortality and any other general or specific toxic effects.

(ii) In any study which demonstrates an absence of toxic effects, further investigation to establish absorption and bioavailability of the test substance should be considered.

(3) *Test report.* (i) In addition to the reporting requirements as specified under 40 CFR part 792 subpart J, the following specific information should be reported:

(A) *Group animal data.* Tabulation of toxic response data by species, strain, sex and exposure level for:

(*1*) Number of animals dying.

(*2*) Number of animals showing signs of toxicity.

(*3*) Number of animals exposed.

(B) *Individual animal data.* (*1*) Time of death during the study or whether animals survived to termination.

(*2*) Time of observation of each abnormal sign and its subsequent course.

(*3*) Body weight data.

(*4*) Feed and water consumption data, when collected.

(*5*) Results of ophthalmological examination, when performed.

(*6*) Hematological tests employed and all results.

(*7*) Clinical biochemistry tests employed and all results.

(*8*) Necropsy findings.

(*9*) Detailed description of all histopathological findings.

(*10*) Statistical treatment of results, where appropriate.

(ii) In addition, for inhalation studies the following should be reported:

(A) *Test conditions.* (*1*) Description of exposure apparatus including design, type, dimensions, source of air, system for generating particulates and aerosols, method of conditioning air, treatment of exhaust air and the method of housing the animals in a test chamber.

(*2*) The equipment for measuring temperature, humidity, and particulate aerosol concentrations and size should be described.

(B) *Exposure data.* These should be tabulated and presented with mean values and a measure of variability (e.g., standard deviation) and should include:

(*1*) Airflow rates through the inhalation equipment.

(*2*) Temperature and humidity of air.

(*3*) Nominal concentration (total amount of test substance fed into the inhalation equipment divided by volume of air).

(*4*) Actual concentration in test breathing zone.

(*5*) Particle size distribution (e.g., median aerodynamic diameter of particles with standard deviation from the mean).

(d) *References.* For additional background information on this test guideline the following references should be consulted:

(1) Benitz, K.F. ''Measurement of Chronic Toxicity,'' *Methods of Toxicology*. Ed. G.E. Paget. (Oxford: Blackwell Scientific Publications, 1970) pp. 82–131.

(2) D'Aguanno, W. ''Drug Safety Evaluation—Pre-Clinical Considerations,'' *Industrial Pharmacology: Neuroleptics.* Vol. I, Ed. S. Fielding and H. Lal. (Mt. Kisco: Futura Publishing Co. 1974) pp. 317–332.

(3) Fitzhugh, O.G. Third Printing: 1975. ''Chronic Oral Toxicity,'' *Appraisal of the Safety of Chemicals in Foods, Drugs and Cosmetics.* The Association of Food and Drug Officials of the United States (1959, 3rd Printing 1975) pp. 36–45.

(4) Goldenthal, E.I., D'Aguanno, W. ''Evaluation of Drugs,'' *Appraisal of the Safety of Chemicals in Foods, Drugs, and Cosmetics.* The Association of Food and Drug Officials of the United States (1959, 3rd Printing 1975) pp. 60–67.

(5) National Academy of Sciences. ''Principles and Procedures for Evaluating the Toxicity of Household Substances,'' a report prepared by the Committee for the Revision of NAS Publication 1138, under the auspices of the Committee on Toxicology, National Research Council, National Academy of Sciences, Washington, DC (1977).

(6) National Center for Toxicological Research. ''Appendix B,'' *Report of Chronic Studies Task Force Committee, April 13–21, 1972.* (Rockville: National Center for Toxicological Research, 1972).

(7) Page, N.P. ''Chronic Toxicity and Carcinogenicity Guidelines,'' *Journal of Environmental Pathology and Toxicology,* 1:161–182 (1977).

(8) Schwartz, E. ''Toxicology of Neuroleptic Agents,'' *Industrial Pharmacology: Neuroleptics* Ed. S. Fielding and H. Lal. (Mt. Kisco, Futura Publishing Co., 1974) pp. 203–221.

(9) United States Pharmaceutical Manufacturers Association. *Guidelines for the Assessment of Drug and Medical Device Safety in Animals.* (1977).

(10) World Health Organization. ''Guidelines for Evaluation of Drugs for Use in Man,'' *WHO Technical Report Series No. 563.* (Geneva: World Health Organization, 1975).

(11) World Health Organization. ''Part I. Environmental Health Criteria 6,'' *Principles and Methods for Evaluating the Toxicity of Chemicals.* (Geneva: World Health Organization, 1978).

(12) World Health Organization. ''Principles for Pre-Clinical Testing of Drug Safety,'' *WHO Technical Report Series No. 341.* (Geneva: World Health Organization, 1966).

[50 FR 39397, Sept. 27, 1985, as amended at 54 FR 21064, May 16, 1989]

§ 798.3300 Oncogenicity.

(a) *Purpose.* The objective of a long-term oncogenicity study is to observe test animals for a major portion of their life span for the development of neoplastic lesions during or after exposure to various doses of a test substance by an appropriate route of administration.

(b) *Test procedures*—(1) *Animal selection*—(i) *Species and strain.* A compound of unknown activity shall be tested on two mammalian species. Rats and mice are the species of choice because of their relatively short life spans, the limited cost of their maintenance, their widespread use in pharmacological and toxicological studies, their susceptibility to tumor induction, and the availability of inbred or sufficiently characterized strains. Commonly used laboratory strains shall be employed. If other species are used, the tester shall provide justification/reasoning for their selection.

(ii) *Age.* (A) Dosing of rodents shall begin as soon as possible after weaning, ideally before the animals are 6 weeks old, but in no case more than 8 weeks old.

(B) At commencement of the study, the weight variation of animals used shall not exceed ±20 percent of the mean weight for each sex.

(C) Studies using prenatal or neonatal animals may be recommended under special conditions.

(iii) *Sex.* (A) Animals of each sex shall be used at each dose level.

(B) The females shall be nulliparous and non-pregnant.

(iv) *Numbers.* (A) For rodents, at least 100 animals (50 females and 50 males) shall be used at each dose level and concurrent control.

(B) If interim sacrifices are planned the number shall be increased by the number of animals scheduled to be sacrificed during the course of the study.

(C) The number of animals at the termination of the study should be adequate for a meaningful and valid statistical evaluation of long term exposure. For a valid interpretation of negative results, it is essential that survival in all groups does not fall below 50 percent at the time of termination.

(2) *Control groups.* (i) A concurrent control group is required. This group shall be an untreated or sham treated control group or, if a vehicle is used in administering the test substance, a vehicle control group. If the toxic properties of the vehicle are not known or cannot be made available, both untreated and vehicle control groups are required.

(ii) In special circumstances such as in inhalation studies involving aerosols or the use of an emulsifier of uncharacterized biological activity in oral studies, a concurrent negative control group shall be utilized. The negative control group shall be treated in the same manner as all other test animals except that this control group shall not be exposed to either the test substance or any vehicle.

(iii) The use of historical control data (i.e., the incidence of tumors and other suspect lesions normally occurring under the same laboratory conditions and in the same strain of animals employed in the test) is desirable for assessing the significance of changes observed in exposed animals.

(3) *Dose levels and dose selection.* (i) For risk assessment purposes, at least 3 dose levels shall be used, in addition to the concurrent control group. Dose levels should be spaced to produce a gradation of chronic effects.

(ii) The high dose level should elicit signs of minimal toxicity without substantially altering the normal life span.

(iii) The lowest dose should not interfere with normal growth, development and longevity of the animal; and it should not otherwise cause any indication of toxicity. In general, this should not be lower than ten percent of the high dose.

(iv) The intermediate dose(s) should be established in a mid-range between the high and low doses, depending upon the toxicokinetic properties of the chemical, if known.

(v) The selection of these dose levels should be based on existing data, preferably on the results of subchronic studies.

(4) *Exposure conditions.* The animals are dosed with the test substance ideally on a 7 day per week basis over a period of at least 24 months for rats, and 18 months for mice. However, based primarily on practical considerations, dosing on a 5 day per week basis is considered to be acceptable.

(5) *Observations period.* It is necessary that the duration of an oncogenicity test comprise the majority of the normal life span of the strain of animals to be used. This time period shall not be less than 24 months for rats and 18 months for mice, and ordinarily not longer than 30 months for rats and 24 months for mice. For longer time periods, and where any other species are used, consultation with the Agency in regard to the duration of the test is advised.

(6) *Administration of the test substance.* The three main routes of administration are oral, dermal, and inhalation. The choice of the route of administration depends upon the physical and chemical characteristics of the test substance and the form typifying exposure in humans.

(i) *Oral studies.* (A) The animals shall receive the test substance in their diet, dissolved in drinking water at levels that do not exceed the maximum solubility of the test chemical under testing condition.

(B) If the test substance is administered in the drinking water, or mixed in the diet, exposure shall be continuous.

(C) For a diet mixture, the highest concentration should not exceed 5 percent.

(ii) *Dermal studies.* (A) The animals are treated by topical application with the test substance, ideally for at least 6 hours per day.

(B) Fur should be clipped from the dorsal area of the trunk of the test animals. Care should be taken to avoid abrading the skin which could alter its permeability.

(C) The test substance shall be applied uniformly over a shaved area which is approximately 10 percent of the total body surface area. With highly toxic substances, the surface area covered may be less, but as much of the area shall be covered with as thin and uniform a film as possible.

(D) During the exposure period, the test substance may be held, if necessary, in contact with the skin with a porous gauze dressing and non-irritating tape. The test site should be further covered in a suitable manner to retain the gauze dressing and test substance and ensure that the animals cannot ingest the test substance.

(iii) *Inhalation studies.* (A) The animals shall be tested with inhalation equipment designed to sustain a minimum dynamic air flow of 12 to 15 air changes per hour, ensure an adequate oxygen content of 19 percent and an evenly distributed exposure atmosphere. Where a chamber is used, its design should minimize crowding of the test animals and maximize their exposure to the test substance. This is best accomplished by individual caging. To ensure stability of a chamber atmosphere, the total ''volume'' of the test animals shall not exceed 5 percent of the volume of the test chamber. Alternatively, oro-nasal, head-only, or whole-body individual chamber exposure may be used.

(B) The temperature at which the test is performed should be maintained at 22 °C (±2°). Ideally, the relative humidity should be maintained between 40 to 60 percent, but in certain instances (e.g. tests of aerosols, use of water vehicle) this may not be practicable.

(C) Feed and water shall be withheld during each daily 6-hour exposure period.

(D) A dynamic inhalation system with a suitable flow control system shall be used. The rate of air flow shall be adjusted to ensure that conditions throughout the equipment are essentially the same. Maintenance of slight negative pressure inside the chamber will prevent leakage of the test substance into the surrounding areas.

(7) *Observations of animals.* (i) Each animal shall be observed daily and if necessary should be handled to appraise its physical condition.

(ii) Additional observations shall be made daily with appropriate actions taken to minimize loss of animals to the study (e.g., necropsy or refrigeration of those animals found dead and isolation or sacrifice of weak or moribund animals).

(iii) Clinical signs and mortality shall be recorded for all animals. Special attention should be paid to tumor development. The day of onset, location, dimensions, appearance and progression of each grossly visible or palpable tumor shall be recorded.

(iv) Body weights shall be recorded individually for all animals once a week during the first 13 weeks of the test period and at least once every 4 weeks thereafter unless signs of clinical toxicity suggest more frequent weighings to facilitate monitoring of health status.

(v) When the test substance is administered in the feed or drinking water, measurements of feed or water consumption, respectively, shall be determined weekly during the first 13 weeks of the study and then at approximately monthly intervals unless health status or body weight changes dictate otherwise.

(vi) At the end of the study period all survivors are sacrificed. Moribund animals shall be removed and sacrificed when noticed.

(8) *Physical measurements.* For inhalation studies, measurements or monitoring should be made of the following:

(i) The rate of air flow shall be monitored continuously and recorded at intervals of at least once every 30 minutes.

(ii) During each exposure period the actual concentrations of the test substance shall be held as constant as practicable, monitored continuously and recorded at least three times during the test period: at the beginning, at

an intermediate time and at the end of the period.

(iii) During the development of the generating system, particle size analysis shall be performed to establish the stability of aerosol concentrations with respect to particle size. During exposure, analyses shall be conducted as often as necessary to determine the consistency of particle size, distribution, and homogeneity of the exposure stream.

(iv) Temperature and humidity shall be monitored continuously, but shoud be recorded at intervals of at least once every 30 minutes.

(9) *Clinical examinations.* At 12 months, 18 months, and at sacrifice, a blood smear shall be obtained from all animals. A differential blood count shall be performed on blood smears from those animals in the highest dosage group and the controls. If these data, or data from the pathological examination indicate a need, then the 12- and 18-month blood smears from other dose levels shall also be examined. Differential blood counts shall be performed for the next lower group(s) if there is a major discrepancy between the highest group and the controls. If clinical observations suggest a deterioration in health of the animals during the study, a differential blood count of the affected animals shall be performed.

(10) *Gross necropsy.* (i) A complete gross examination shall be performed on all animals, including those which died during the experiment or were killed in moribund conditions.

(ii) The following organs and tissues or representative samples thereof, shall be preserved in a suitable medium for possible future histopathological examination: All gross lesions and tumors of all animals shall be preserved; brain—including sections of medulla/pons, cerebellar cortex and cerebral cortex; pituitary; thyroid/parathyroid; thymus; lungs; trachea; heart; spinal cord at three levels—cervical, midthoracic and lumbar; sternum and/or femur with bone marrow; salivary glands; liver; spleen; kidneys; adrenals; esophagus; stomach; duodenum; jejunum; ileum; cecum; colon; rectum; urinary bladder; representative lymph nodes; pancreas; gonads; uterus; accessory genital organs (epididymis, prostate, and, if present, seminal vesicles); mammary gland; skin; musculature; peripheral nerve; and eyes. In inhalation studies, the entire respiratory tract shall be preserved, including nasal cavity, pharynx, larynx and paranasal sinuses. In dermal studies, skin from sites of skin painting shall be examined and preserved.

(iii) Inflation of lungs and urinary bladder with a fixative is the optimal method for preservation of these tissues. The proper inflation and fixation of the lungs in inhalation studies is required for appropriate and valid histopathological examination.

(iv) If other clinical examinations are carried out, the information obtained from these procedures shall be available before microscopic examination, since they may provide significant guidance to the pathologist.

(11) *Histopathology.* (i) The following histopathology shall be performed:

(A) Full histopathology on organs and tissues listed above of all animals in the control and high dose groups and all animals that died or were killed during the study.

(B) All gross lesions in all animals.

(C) Target organs in all animals.

(ii) If a significant difference is observed in hyperplastic, pre-neoplastic or neoplastic lesions between the highest dose and control groups, microscopic examination shall be made on that particular organ or tissue of all animals in the study.

(iii) If excessive early deaths or other problems occur in the high dose group, compromising the significance of the data, the next lower dose level shall be examined for complete histopathology.

(iv) In case the results of an experiment give evidence of substantial alteration of the animals' normal longevity or the induction of effects that might affect a neoplastic response, the next lower dose level shall be examined fully as described in this section.

(v) An attempt shall be made to correlate gross observations with microscopic findings.

(c) *Data and reporting*—(1) *Treatment of results.* (i) Data shall be summarized in tabular form, showing for each test group the number of animals at the

start of the test, the number of animals showing lesions, the types of lesions and the percentage of animals displaying each type of lesion.

(ii) All observed results, quantitative and incidental, shall be evaluated by an appropriate statistical method. Any generally accepted statistical method may be used; the statistical methods shall be selected during the design of the study.

(2) *Evaluation of study results.* (i) The findings of an oncogenic toxicity study shall be evaluated in conjunction with the findings of preceding studies and considered in terms of the toxic effects, the necropsy and histopathological findings. The evaluation shall include the relationship between the dose of the test substance and the presence, incidence and severity of abnormalities (including behavioral and clinical abnormalities), gross lesions, identified target organs, body weight changes, effects on mortality and any other general or specific toxic effects.

(ii) In any study which demonstrates an absence of toxic effects, further investigation to establish absorption and bioavailability of the test substance should be considered.

(iii) In order for a negative test to be acceptable, it shall meet the following criteria: no more than 10 percent of any group is lost due to autolysis, cannibalism, or management problems; and survival in each group should be no less than 50 percent at 18 months for mice and hamsters and at 24 months for rats.

(3) *Test report.* (i) In addition to the reporting requirements as specified under 40 CFR part 792, subpart J the following specific information shall be reported:

(A) *Group animal data.* Tabulation of toxic response data by species, strain, sex and exposure level for:

(*1*) Number of animals dying.

(*2*) Number of animals showing signs of toxicity.

(*3*) Number of animals exposed.

(B) *Individual animal data.* (*1*) Time of death during the study or whether animals survived to termination.

(*2*) Time of observation of each abnormal sign and its subsequent course.

(*3*) Body weight data.

(*4*) Feed and water consumption data, when collected.

(*5*) Results of ophthalmological examination, when performed.

(*6*) Hematological tests employed and all results.

(*7*) Clinical biochemistry tests employed and all results.

(*8*) Necropsy findings.

(*9*) Detailed description of all histopathological findings.

(*10*) Statistical treatment of results, where appropriate.

(*11*) Historical control data, if taken into account.

(ii) In addition, for inhalation studies the following shall be reported:

(A) *Test conditions.* (1) Description of exposure apparatus including design, type, dimensions, source of air, system for generating particulates and aerosols, method of conditioning air, treatment of exhaust air and the method of housing the animals in a test chamber.

(*2*) The equipment for measuring temperature, humidity, and particulate aerosol concentrations and size shall be described.

(B) *Exposure data.* These shall be tabulated and presented with mean values and a measure of variability (e.g., standard deviation) and shall include:

(*1*) Airflow rates through the inhalation equipment.

(*2*) Temperature and humidity of air.

(*3*) Nominal concentration (total amount of test substance fed into the inhalation equipment divided by volume of air).

(*4*) Actual concentration in test breathing zone.

(*5*) Particle size distribution (e.g., median aerodynamic diameter of particles with standard deviation from the mean).

(d) *References.* For additional background information on this test guideline the following references should be consulted:

(1) Department of Health and Welfare. *The Testing of Chemicals* for Carcinogenicity, Mutagenicity, Teratogenicity. Minister of Health and Welfare. (Canada: Department of Health and Welfare, 1975).

(2) Food and Drug Administration Advisory Committee on Protocols for

Safety Evaluation: Panel on Carcinogenesis. ''Report on Cancer Testing in the Safety of Food Additives and Pesticides,'' *Toxicology and Applied Pharmacology*. 20:419–438 (1971).

(3) International Union Against Cancer. ''Carcinogenicity Testing,'' *IUCC Technical Report Series.* Vol. 2., Ed. I. Berenblum. (Geneva: International Union Against Cancer, 1969).

(4) Leong, B.K.J., Laskin, S. ''Number and Species of Experimental Animals for Inhalation Carcinogenicity Studies'' Paper presented at Conference on Target Organ Toxicity, September 1975, Cincinnati, Ohio.

(5) National Academy of Sciences. ''Principles and Procedures for Evaluating the Toxicity of Household Substances.'' A report prepared by the Committee for the Revision of NAS Publication 1138, under the auspices of the Committee on Toxicology, National Research Council, National Academy of Sciences, Washington, DC (1977).

(6) National Cancer Institute. *Report of the Subtask Group on Carcinogen Testing to the Interagency Collaborative Group on Environmental Carcinogenesis.* (Bethesda: United States National Cancer Institute, 1976).

(7) National Center for Toxicological Research. ''Appendix B,'' *Report of Chronic Studies Task Force Committee.* April 13–21 (Rockville: National Center for Toxicological Research, 1972).

(8) Page, N.P. ''Chronic Toxicity and Carcinogenicity Guidelines,'' *Journal of Environmental Pathology and Toxicology*. 1:161–182 (1977).

(9) Page, N.P. ''Concepts of a Bioassay Program in Environmental Carcinogenesis,'' *Advances in Modern Toxicology Vol. 3,* Ed. Kraybill and Mehlman. (Washington, DC: Hemisphere Publishing Corporation, 1977) pp. 87–171.

(10) Sontag, J.M., Page N.P., Saffiotti, U. *Guidelines for Carcinogen Bioassay in Small Rodents.* NCI-CS-TR-1. (Bethesda: United States Cancer Institute, Division of Cancer Control and Prevention, Carcinogenesis Bioassay Program, 1976).

(11) United States Pharmaceutical Manufacturers Association. *Guidelines for the Assessment of Drug and Medical Device Safety in Animals.* (1977).

(12) World Health Organization. ''Principles for the Testing and Evaluation of Drugs for Carcinogenicity,'' *WHO Technical Report Series No. 426.* (Geneva: World Health Organization, 1969).

(13) World Health Organization. ''Part I. Environmental Health Criteria 6,'' *Principles and Methods for Evaluating the Toxicity of Chemicals.* (Geneva: World Health Organization, 1978).

[50 FR 39397, Sept. 27, 1985, as amended at 52 FR 19075, May 20, 1987; 54 FR 21064, May 16, 1989]

§ 798.3320 Combined chronic toxicity/oncogenicity.

(a) *Purpose.* The objective of a combined chronic toxicity/oncogenicity study is to determine the effects of a substance in a mammalian species following prolonged and repeated exposure. The application of this guideline should generate data which identify the majority of chronic and oncogenic effects and determine dose-response relationships. The design and conduct should allow for the detection of neoplastic effects and a determination of oncogenic potential as well as general toxicity, including neurological, physiological, biochemical, and hematological effects and exposure-related morphological (pathology) effects.

(b) *Test procedures*—(1) *Animal selection*—(i) *Species and strain.* Preliminary studies providing data on acute, subchronic, and metabolic responses should have been carried out to permit an appropriate choice of animals (species and strain). As discussed in other guidelines, the mouse and rat have been most widely used for assessment of oncogenic potential, while the rat and dog have been most often studied for chronic toxicity. The rat is the species of choice for combined chronic toxicity and oncogenicity studies. The provisions of this guideline are designed primarily for use with the rat as the test species. If other species are used, the tester should provide justification/reasoning for their selection. The strain selected should be susceptible to the oncogenic or toxic effect of the class of substances being tested, if known, and provided it does not have a spontaneous background too high for

meaningful assessment. Commonly used laboratory strains should be employed.

(ii) *Age.* (A) Dosing of rats should begin as soon as possible after weaning, ideally before the rats are 6 weeks old, but in no case more than 8 weeks old.

(B) At commencement of the study, the weight variation of animals used should not exceed ±20 percent of the mean weight for each sex.

(C) Studies using prenatal or neonatal animals may be recommended under special conditions.

(iii) *Sex.* (A) Equal numbers of animals of each sex should be used at each dose level.

(B) The females should be nulliparous and nonpregnant.

(iv) *Numbers.* (A) At least 100 rodents (50 females and 50 males) should be used at each dose level and concurrent control for those groups not intended for early sacrifice. At least 40 rodents (20 females and 20 males) should be used for satellite dose group(s) and the satellite control group. The purpose of the satellite group is to allow for the evaluation of pathology other than neoplasia.

(B) If interim sacrifices are planned, the number of animals should be increased by the number of animals scheduled to be sacrificed during the course of the study.

(C) The number of animals at the termination of each phase of the study should be adequate for a meaningful and valid statistical evaluation of long term exposure. For a valid interpretation of negative results, it is essential that survival in all groups not fall below 50 percent at the time of termination.

(2) *Control groups.* (i) A concurrent control group (50 females and 50 males) and a satellite control group (20 females and 20 males) are recommended. These groups should be untreated or sham treated control groups or, if a vehicle is used in administering the test substance, vehicle control groups. If the toxic properties of the vehicle are not known or cannot be made available, both untreated and vehicle control groups are recommended. Animals in the satellite control group should be sacrificed at the same time the satellite test group is terminated.

(ii) In special circumstances such as inhalation studies involving aerosols or the use of an emulsifier of uncharacterized biological activity in oral studies, a concurrent negative control group should be utilized. The negative control group should be treated in the same manner as all other test animals, except that this control group should not be exposed to the test substance or any vehicle.

(iii) The use of historical control data (i.e., the incidence of tumors and other suspect lesions normally occuring under the same laboratory conditions and in the same strain of animals employed in the test) is desirable for assessing the significance of changes observed in exposed animals.

(3) *Dose levels and dose selection.* (i) For risk assessment purposes, at least three dose levels should be used, in addition to the concurrent control group. Dose levels should be spaced to produce a gradation of effects.

(ii) The highest dose level in rodents should elicit signs of toxicity without substantially altering the normal life span due to effects other than tumors.

(iii) The lowest dose level should produce no evidence of toxicity. Where there is a usable estimation of human exposure, the lowest dose level should exceed this even though this dose level may result in some signs of toxicity.

(iv) Ideally, the intermediate dose level(s) should produce minimal observable toxic effects. If more than one intermediate dose is used the dose levels should be spaced to produce a gradation of toxic effects.

(v) For rodents, the incidence of fatalities in low and intermediate dose groups and in the controls should be low to permit a meaningful evaluation of the results.

(vi) For chronic toxicological assessment, a high dose treated satellite and a concurrent control satellite group should be included in the study design. The highest dose for satellite animals should be chosen so as to produce frank toxicity, but not excessive lethality, in order to elucidate a chronic toxicological profile of the test substance. If more than one dose level is selected for satellite dose groups, the doses should be spaced to produce a gradation of toxic effects.

(4) *Exposure conditions.* The animals are dosed with the test substance ideally on a 7-day per week basis over a period of at least 24 months for rats, and 18 months for mice and hamsters, except for the animals in the satellite groups which should be dosed for 12 months.

(5) *Observation period.* It is necessary that the duration of the oncogenicity test comprise the majority of the normal life span of the animals to be used. It has been suggested that the duration of the study should be for the entire lifetime of all animals. However, a few animals may greatly exceed the average lifetime and the duration of the study may be unnecessarily extended and complicate the conduct and evaluation of the study. Rather, a finite period covering the majority of the expected life span of the strain is preferred since the probability is high that, for the great majority of chemicals, induced tumors will occur within such an observation period. The following guidelines are recommended:

(i) Generally, the termination of the study should be at 18 months for mice and hamsters and 24 months for rats; however, for certain strains of animals with greater longevity and/or low spontaneous tumor rate, termination should be at 24 months for mice and hamsters and at 30 months for rats. For longer time periods, and where any other species are used, consultation with the Agency in regard to duration of the test is advised.

(ii) However, termination of the study is acceptable when the number of survivors of the lower doses or of the control group reaches 25 percent. In the case where only the high dose group dies prematurely for obvious reasons of toxicity, this should not trigger termination of the study.

(iii) The satellite groups and the concurrent satellite control group should be retained in the study for at least 12 months. These groups should be scheduled for sacrifice for an estimation of test-substance-related pathology uncomplicated by geriatric changes.

(6) *Administration of the test substance.* The three main routes of administration are oral, dermal, and inhalation. The choice of the route of administration depends upon the physical and chemical characteristics of the test substance and the form typifying exposure in humans.

(i) *Oral studies.* (A) The animals should receive the test substance in their diet, dissolved in drinking water, or given by gavage or capsule for a period of at least 24 months for rats and 18 months for mice and hamsters.

(B) If the test substance is administered in the drinking water, or mixed in the diet, exposure is continuous.

(C) For a diet mixture, the highest concentration should not exceed 5 percent.

(ii) *Dermal studies.* (A) The animals are treated by topical application with the test substance, ideally for at least 6 hours per day.

(B) Fur should be clipped from the dorsal area of the trunk of the test animals. Care should be taken to avoid abrading the skin which could alter its permeability.

(C) The test substance should be applied uniformly over a shaved area which is approximately 10 percent of the total body surface area. With highly toxic substances, the surface area covered may be less, but as much of the area as possible should be covered with as thin and uniform a film as possible.

(D) During the exposure period, the test substance may be held, if necessary, in contact with the skin with a porous gauze dressing and nonirritating tape. The test site should be further covered in a suitable manner to retain the gauze dressing and test substance and ensure that the animals cannot ingest the test substance.

(iii) *Inhalation studies.* (A) The animals should be tested with inhalation equipment designed to sustain a dynamic air flow of 12 to 15 air changes per hour, to ensure an adequate oxygen content of 19 percent and an evenly distributed exposure atmosphere. Where a chamber is used, its design should minimize crowding of the test animals and maximize their exposure to the test substance. This is best accomplished by individual caging. As a general rule, to ensure stability of a chamber atmosphere, the total ''volume'' of the test animals should not exceed 5 percent of the volume of the test chamber. Alternatively, oro-nasal, head only, or whole

body individual chamber exposure may be used.

(B) The temperature at which the test is performed should be maintained at 22 °C (±2°). Ideally, the relative humidity should be maintained between 40 to 60 percent, but in certain instances (e.g., tests of aerosols, use of water vehicle) this may not be practicable.

(C) Feed and water should be withheld during each daily 6-hour exposure period.

(D) A dynamic inhalation system with a suitable analytical concentration control system should be used. The rate of air flow should be adjusted to ensure that conditions throughout the equipment are essentially the same. Maintenance of slight negative pressure inside the chamber will prevent leakage of the test substance into the surrounding areas.

(7) *Observation of animals.* (i) Each animal should be handled and its physical condition appraised at least once each day.

(ii) Additional observations should be made daily with appropriate actions taken to minimize loss of animals to the study (e.g., necropsy or refrigeration of those animals found dead and isolation or sacrifice of weak or moribund animals).

(iii) Clinical signs and mortality should be recorded for all animals. Special attention should be paid to tumor development. The time of onset, location, dimensions, appearance and progression of each grossly visible or palpable tumor should be recorded.

(iv) Body weights should be recorded individually for all animals once a week during the first 13 weeks of the test period and at least once every 4 weeks thereafter, unless signs of clinical toxicity suggest more frequent weighings to facilitate monitoring of health status.

(v) When the test substance is administered in the feed or drinking water, measurements of feed or water consumption, respectively, should be determined weekly during the first 13 weeks of the study and then at approximately monthly intervals unless health status or body weight changes dictate otherwise.

(vi) At the end of the study period, all survivors are sacrificed. Moribund animals should be removed and sacrificed when noticed.

(8) *Physical measurements.* For inhalation studies, measurements or monitoring should be made of the following:

(i) The rate of airflow should be monitored continuously, but should be recorded at intervals of at least once every 30 minutes.

(ii) During each exposure period the actual concentrations of the test substance should be held as constant as practicable, monitored continuously and recorded at least three times during the test period: At the beginning, at an intermediate time and at the end of the period.

(iii) During the development of the generating system, particle size analysis should be performed to establish the stability of aerosol concentrations. During exposure, analyses should be conducted as often as necessary to determine the consistency of particle size distribution and homogeneity of the exposure stream.

(iv) Temperature and humidity should be monitored continuously, but should be recorded at intervals of at least once every 30 minutes.

(9) *Clinical examinations.* (i) The following examinations should be made on at least 20 rodents of each sex per dose level:

(A) Certain hematology determinations (e.g., hemoglobin content, packed cell volume, total red blood cells, total white blood cells, platelets, or other measures of clotting potential) should be performed at termination and should be performed at 3 months, 6 months and at approximately 6-month intervals thereafter (for those groups on test for longer than 12 months) on blood samples collected from 20 rodents per sex of all groups. These collections should be from the same animals at each interval. If clinical observations suggest a deterioration in health of the animals during the study, a differential blood count of the affected animals should be performed. A differential blood count should be performed on samples from animals in the highest dosage group and the controls. Differential blood counts should be performed for the next lower group(s) if

there is a major discrepancy between the highest group and the controls. If hematological effects were noted in the subchronic test, hematological testing should be performed at 3, 6, 12, 18 and 24 months for a year study.

(B) Certain clinical biochemistry determinations on blood should be carried out at least three times during the test period: Just prior to initiation of dosing (baseline data), near the middle and at the end of the test period. Blood samples should be drawn for clinical measurements from at least ten rodents per sex of all groups; if possible, from the same rodents at each time interval. Test areas which are considered appropriate to all studies: electrolyte balance, carbohydrate metabolism and liver and kidney function. The selection of specific tests will be influenced by observations on the mode of action of the substance and signs of clinical toxicity. Suggested chemical determinations: Calcium, phosphorus, chloride, sodium, potassium, fasting glucose (with period of fasting appropriate to the species), serum glutamic-pyruvic transaminase (now known as serum alanine aminotransferase), serum glutamic oxaloacetic transaminase (now known as serum aspartate aminotransferase), ornithine decarboxylase, gamma glutamyl transpeptidase, blood urea nitrogen, albumen, creatinine phosphokinase, total cholesterol, total bilirubin and total serum protein measurements. Other determinations which may be necessary for an adequate toxicological evaluation include analyses of lipids, hormones, acid/base balance, methemoglobin and cholinesterase activity. Additional clinical biochemistry may be employed where necessary to extend the investigation of observed effects.

(ii) The following should be performed on at least 10 rodents of each sex per dose level:

(A) Urine samples from the same rodents at the same intervals as hematological examination above, should be collected for analysis. The following determinations should be made from either individual animals or on a pooled sample/sex/group for rodents: appearance (volume and specific gravity), protein, glucose, ketones, bilirubin, occult blood (semi-quantitatively) and microscopy of sediment (semi-quantitatively).

(B) Ophthalmological examination, using an ophthalmoscope or equivalent suitable equipment, should be made prior to the administration of the test substance and at the termination of the study. If changes in the eyes are detected, all animals should be examined.

(10) *Gross necropsy*. (i) A complete gross examination should be performed on all animals, including those which died during the experiment or were killed in moribund conditions.

(ii) The liver, kidneys, adrenals, brain and gonads should be weighed wet, as soon as possible after dissection to avoid drying. For these organs, at least 10 rodents per sex per group should be weighed.

(iii) The following organs and tissues, or representative samples thereof, should be preserved in a suitable medium for possible future histopathological examination: All gross lesions and tumors; brain-including sections of medulla/pons, cerebellar cortex, and cerebral cortex; pituitary; thyroid/parathyroid; thymus; lungs; trachea; heart; sternum and/or femur with bone marrow; salivary glands; liver; spleen; kidneys; adrenals; esophagus; stomach; duodenum; jejunum; ileum; cecum; colon; rectum; urinary bladder; representative lymph nodes; pancreas; gonads; uterus; accessory genital organs (epididymis, prostate, and, if present, seminal vesicles); female mammary gland; aorta; gall bladder (if present); skin; musculature; peripheral nerve; spinal cord at three levels—cervical, midthoracic, and lumbar; and eyes. In inhalation studies, the entire respiratory tract, including nose, pharynx, larynx and paranasal sinuses should be examined and preserved. In dermal studies, skin from sites of skin painting should be examined and preserved.

(iv) Inflation of lungs and urinary bladder with a fixative is the optimal method for preservation of these tissues. The proper inflation and fixation of the lungs in inhalation studies is considered essential for appropriate and valid histopathological examination.

(v) If other clinical examinations are carried out, the information obtained from these procedures should be available before microscopic examination, since they may provide significant guidance to the pathologist.

(11) *Histopathology*. (i) The following histopathology should be performed:

(A) Full histopathology on the organs and tissues, listed above, of all non-rodents, of all rodents in the control and high dose groups and of all rodents that died or were killed during the study.

(B) All gross lesions in all animals.

(C) Target organs in all animals.

(D) Lungs, liver and kidneys of all animals. Special attention to examination of the lungs of rodents should be made for evidence of infection since this provides an assessment of the state of health of the animals.

(ii) If excessive early deaths or other problems occur in the high dose group compromising the significance of the data, the next dose level should be examined for complete histopathology.

(iii) In case the results of the experiment give evidence of substantial alteration of the animals' normal longevity or the induction of effects that might affect a toxic response, the next lower dose level should be examined as described above.

(iv) An attempt should be made to correlate gross observations with microscopic findings.

(c) *Data and reporting*—(1) *Treatment of results.* (i) Data should be summarized in tabular form, showing for each test group the number of animals at the start of the test, the number of animals showing lesions, the types of lesions and the percentage of animals displaying each type of lesion.

(ii) All observed results, quantitative and incidental, should be evaluated by an appropriate statistical method. Any generally accepted statistical methods may be used; the statistical methods should be selected during the design of the study.

(2) *Evaluation of study results.* (i) The findings of a combined chronic toxicity/oncogenicity study should be evaluated in conjunction with the findings of preceding studies and considered in terms of the toxic effects, the necropsy and histopathological findings. The evaluation will include the relationship between the dose of the test substance and the presence, incidence and severity of abnormalities (including behavioral and clinical abnormalities), gross lesions, identified target organs, body weight changes, effects on mortality and any other general or specific toxic effects.

(ii) In any study which demonstrates an absence of toxic effects, further investigation to establish absorption and bioavailablity of the test substance should be considered.

(iii) In order for a negative test to be acceptable, it should meet the following criteria: No more than 10 percent of any group is lost due to autolysis, cannibalism, or management problems; and survival in each group is no less than 50 percent at 18 months for mice and hamsters and at 24 months for rats.

(3) *Test report.* (i) In addition to the reporting requirements as specified under 40 CFR part 792, subpart J the following specific information should be reported:

(A) *Group animal data.* Tabulation of toxic response data by species, strain, sex and exposure level for:

(*1*) Number of animals dying.

(*2*) Number of animals showing signs of toxicity.

(*3*) Number of animals exposed.

(B) *Individual animal data.* (*1*) Time of death during the study or whether animals survived to termination.

(*2*) Time of observation of each abnormal sign and its subsequent course.

(*3*) Body weight data.

(*4*) Feed and water consumption data, when collected.

(*5*) Results of ophthalmological examination, when performed.

(*6*) Hematological tests employed and all results.

(*7*) Clinical biochemistry tests employed and all results.

(*8*) Necropsy findings.

(*9*) Detailed description of all histopathological findings.

(*10*) Statistical treatment of results where appropriate.

(*11*) Historical control data, if taken into account.

(ii) In addition, for inhalation studies the following should be reported:

(A) *Test conditions.* (*1*) Description of exposure apparatus including design, type, dimensions, source of air, system for generating particulates and aerosols, method of conditioning air, treatment of exhaust air and the method of housing the animals in a test chamber.

(*2*) The equipment for measuring temperature, humidity, and particulate aerosol concentrations and size should be described.

(B) *Exposure data.* These should be tabulated and presented with mean values and a measure of variability (e.g. standard deviation) and should include:

(*1*) Airflow rates through the inhalation equipment.

(*2*) Temperature and humidity of air.

(*3*) Nominal concentration (total amount of test substance fed into the inhalation equipment divided by volume of air).

(*4*) Actual concentration in test breathing zone.

(*5*) Particle size distribution (e.g. median aerodynamic diameter of particles with standard deviation from the mean).

(d) *References.* For additional background information on this test guideline the following references should be consulted:

(1) Benitz, K.F. ''Measurement of Chronic Toxicity,'' *Methods of Toxicology*. Ed. G.E. Paget. (Oxford: Blackwell Scientific Publications, 1970) pp. 82–131.

(2) D'Aguanno, W. ''Drug Safety Evaluation—Pre-Clinical Considerations,'' ''*Industrial Pharmacology: Neuroleptics.* Vol. I Ed. S. Fielding and H. Lal. (Mt. Kisco, New York: Futura Publishing Co., 1974) pp. 317–332.

(3) Department of Health and Welfare. *The Testing of Chemicals for Carcinogenicity, Mutagenicity, Teratogenicity. Minister of Health and Welfare. (Canada: Department of Health and Welfare, 1975).*

(4) Fitzhugh, O.G. ''Chronic Oral Toxicity,'' *Appraisal of the Safety of Chemicals in Foods, Drugs and Cosmetics.* The Association of Food and Drug Officials of the United States (1959, 3rd Printing 1975). pp. 36–45.

(5) Food and Drug Administration Advisory Committee on Protocols for Safety Evaluation: Panel on Carcinogenesis. ''*Report on Cancer Testing in the Safety of Food Additives and Pesticides,*'' *Toxicology and Applied Pharmacology*. 20:419–438 (1971).

(6) Goldenthal, E.I., and D'Aguanno, W. ''Evaluation of Drugs,'' *Appraisal of the Safety of Chemicals in Foods, Drugs, and Cosmetics.* The Association of Food and Drug Officials of the United States (1959, 3rd printing 1975) pp.60–67.

(7) International Union Against Cancer. ''Carcinogenicity Testing,'' *IUCC Technical Report Series* Vol. 2, Ed. I. Berenblum. (Geneva: International Union Against Cancer, 1969).

(8) Leong, B.K.J., and Laskin, S. ''Number and Species of Experimental Animals for Inhalation Carcinogenicity Studies,'' Paper presented at Conference on Target Organ Toxicity. September, 1975, Cincinnati, Ohio.

(9) National Academy of Sciences. ''Principles and Procedures for Evaluating the Toxicity of Household Substances,'' A report prepared by the Committee for the Revision of NAS Publication 1138, under the auspices of the Committee on Toxicology, National Research Council, National Academy of Sciences, Washington, DC (1977).

(10) National Cancer Institute. *Report of the Subtask Group on Carcinogen Testing to the Interagency Collaborative Group on Environmental Carcinogenesis.* (Bethesda: United States National Cancer Institute, 1976).

(11) National Center for Toxicological. *Report of Chronic Studies Task Force Research Committee. ''Appendix B, (Rockville: National Center for Toxicological Research, 1972)).*

(12) Page, N.P. ''Chronic Toxicity and Carcinogenicity Guidelines,'' *Journal Environmental Pathology and Toxicology*. 1:161–182 (1977).

(13) Page, N.P. ''Concepts of a Bioassay Program in Environmental Carcinogenesis,'' *Advances in Modern Toxicology* Volume 3, Ed. Kraybill and Mehlman. (Washington, D.C.: Hemisphere Publishing Corp., 1977) pp. 87–171.

(14) Schwartz, E. 1974. ''Toxicology of Neuroleptic Agents,'' *Industrial Pharmacology: Neuroleptics.* Ed. S. Fielding and H. Lal. (Mt. Kisco, New York: Futura Publishing Co, 1974) pp. 203–221.

(15) Sontag, J.M., Page, N.P., and Saffiotti, U. *Guidelines for Carcinogen Bioassay in Small Rodents.* NCI-CS-TR-1 (Bethesda: United States Cancer Institute, Division of Cancer Control and Prevention, Carcinogenesis Bioassay Program, 1976).

(16) United States Pharmaceutical Manufacturers Association. *Guidelines for the Assessment of Drug and Medical Device Safety in Animals.* (1977).

(17) World Health Organization. ''Principles for the Testing and Evaluation of Drugs for Carcinogenicity,'' *WHO Technical Report Series No. 426.* (Geneva: World Health Organization, 1969).

(18) World Health Organization. ''Guidelines for Evaluation of Drugs for Use in Man,'' *WHO Technical Report Series No. 563.* (Geneva: World Health Organization, 1975).

(19) World Health Organization. ''Part I. Environmental Health Criteria 6,'' *Principles and Methods for Evaluating the Toxicity of Chemicals.* (Geneva: World Health Organization, 1978).

(20) World Health Organization. ''Principles for Pre-Clinical Testing of Drug Safety,'' *WHO Technical Report Series No. 341.* (Geneva: World Health Organization, 1966).

[50 FR 39397, Sept. 27, 1985, as amended at 54 FR 21064, May 16, 1989]

Subpart E—Specific Organ/Tissue Toxicity

§ 798.4100 Dermal sensitization.

(a) *Purpose.* In the assessment and evaluation of the toxic characteristics of a substance, determination of its potential to provoke skin sensitization reactions is important. Information derived from tests for skin sensitization serves to identify the possible hazard to a population repeatedly exposed to a test substance. While the desirability of skin sensitization testing is recognized, there are some real differences of opinion about the best method to use. The test selected should be a reliable screening procedure which should not fail to identify substances with significant allergenic potential, while at the same time avoiding false negative results.

(b) *Definitions.* (1) Skin sensitization (allergic contact dermatitis) is an immunologically mediated cutaneous reaction to a substance. In the human, the responses may be characterized by pruritis, erythema, edema, papules, vesicles, bullae, or a combination of these. In other species the reactions may differ and only erythema and edema may be seen.

(2) Induction period is a period of at least 1 week following a sensitization exposure during which a hypersensitive state is developed.

(3) Induction exposure is an experimental exposure of a subject to a test substance with the intention of inducing a hypersensitive state.

(4) Challenge exposure is an experimental exposure of a previously treated subject to a test substance following an induction period, to determine whether the subject will react in a hypersensitive manner.

(c) *Principle of the test method.* Following initial exposure(s) to a test substance, the animals are subsequently subjected, after a period of not less than 1 week, to a challenge exposure with the test substance to establish whether a hypersensitive state has been induced. Sensitization is determined by examining the reaction to the challenge exposure and comparing this reaction to that of the initial induction exposure.

(d) *Test procedures.* (1) Any of the following seven test methods is considered to be acceptable. It is realized, however, that the methods differ in their probability and degree of reaction to sensitizing substances.

(i) Freund's complete adjuvant test.

(ii) Guinea-pig maximization test.

(iii) Split adjuvant technique.

(iv) Buehler test.

(v) Open epicutaneous test.

(vi) Mauer optimization test.

(vii) Footpad technique in guinea pig.

(2) Removal of hair is by clipping, shaving, or possibly by depilation, depending on the test method used.

(3) *Animal selection*—(i) *Species and strain.* The young adult guinea pig is the preferred species. Commonly used laboratory strains should be employed. If other species are used, the tester should provide justification/reasoning for their selection.

(ii) *Number and sex.* (A) The number and sex of animals used will depend on the method employed.

(B) The females should be nulliparous and nonpregnant.

(4) *Control animals.* (i) Periodic use of a positive control substance with an acceptable level of reliability for the test system selected is recommended;

(ii) Animals may act as their own controls or groups of induced animals can be compared to groups which have received only a challenge exposure.

(5) *Dose levels.* The dose level will depend upon the method selected.

(6) *Observation of animals.* (i) Skin reactions should be graded and recorded after the challenge exposures at the time specified by the methodology selected. This is usually at 24, 48, and 72, hours. Additional notations should be made as necessary to fully describe unusual responses;

(ii) Regardless of method selected, initial and terminal body weights should be recorded.

(7) *Procedures.* The procedures to be used are those described by the methodology chosen.

(e) *Data and reporting.* (1) Data should be summarized in tabular form, showing for each individual animal the skin reaction, results of the induction exposure(s) and the challenge exposure(s) at times indicated by the method chosen. As a minimum, the erythema and edema should be graded and any unusual finding should be recorded.

(2) *Evaluation of the results.* The evaluation of results will provide information on the proportion of each group that became sensitized and the extent (slight, moderate, severe) of the sensitization reaction in each individual animal.

(3) *Test report.* In addition to the reporting requirements as specified under 40 CFR part 792, subpart J, the following specific information should be reported:

(i) A description of the method used and the commonly accepted name.

(ii) Information on the positive control study, including positive control used, method used, and time conducted.

(iii) The number and sex of the test animals.

(iv) Species and strain.

(v) Individual weights of the animals at the start of the test and at the conclusion of the test.

(vi) A brief description of the grading system.

(vii) Each reading made on each individual animal.

(f) *References.* For additional background information on this test guideline the following references should be consulted:

(1) Buehler, E.V. ''Delayed Contact Hypersensitivity in the Guinea Pig,'' *Archives Dermatology*. 91:171 (1965).

(2) Draize, J.H. ''Dermal Toxicity,'' *Food Drug Cosmetic Law Journal.* 10:722–732 (1955).

(3) Klecak, G. ''Identification of Contact Allergens: Predictive Tests in Animals,'' *Advances in Modern Toxicology: Dermatology and Pharmacology*. Ed. F.N. Marzulli and H.I. Maibach. (Washington, D.C.: Hemisphere Publishing Corp., 1977) 4:305–339).

(4) Klecak, G., Geleick, H., Grey, J.R. ''Screening of Fragrance Materials for Allergenicity in the Guinea Pig.–1. Comparison of Four Testing Methods,'' *Journal of the Society of Cosmetic Chemists.* 28:53–64 (1977).

(5) Magnusson, B., Kligman, A.M. ''The Identification of Contact Allergens by Animal Assay,'' The Guinea Pig Maximization Test. *The Journal of Investigative Dermatology*. 52:268–276 (1973).

(6) Maguire, H.C. ''The Bioassay of Contact Allergens in the Guinea Pig'' *Journal of the Society of Cosmetic Chemists.* 24:151–162 (1973).

(7) Maurer, T., Thomann, P., Weirich, E.G., Hess, R. ''The Optimization Test in the Guinea Pig. A Method for the Predictive Evaluation of the Contact Allergenicity of Chemicals,'' *Agents and Actions.* (Basel: Birkhauser Verlag, 1975) Vol. 5/2.

(8) Maurer, T., Thomann, P., Weirich, E.G., Hess, R. ''The Optimization Test in the Guinea Pig: A Method for the Predictive Evaluation of the Contact Allergenicity of Chemicals,'' *International Congress Series Excerpta Medica No. 376,* (1975) Vol. 203.

§ 798.4350 Inhalation developmental toxicity study.

(a) *Purpose.* In the assessment and evaluation of the toxic characteristics

of an inhalable material such as a gas, volatile substance, or aerosol/particulate, determination of the potential developmental toxicity is important. The inhalation developmental toxicity study is designed to provide information on the potential hazard to the unborn which may arise from exposure of the mother during pregnancy.

(b) *Definitions.* (1) Developmental toxicity is the property of a chemical that causes in utero death, structural or functional abnormalities or growth retardation during the period of development.

(2) ''Aerodynamic diameter'' applies to the behavioral size of particles of aerosols. It is the diameter of a sphere of unit density which behaves aerodynamically like the particles of the test substance. It is used to compare particles of different sizes, shapes, and densities and to predict where in the respiratory tract such particles may be deposited. This term is used in contrast to ''optical,'' ''measured'' or ''geometric'' diameters which are representation of actual diameters which in themselves cannot be related to deposition within the respiratory tract.

(3) ''Geometric mean diameter'' or ''median diameter'' is the calculated aerodynamic diameter which divides the particles of an aerosol in half based on the weight of the particles. Fifty percent of the particles by weight will be larger than the median diameter and 50 percent of the particles will be smaller than the median diameter. The median diameter and its geometeric standard deviation are used to statistically describe the particle size distribution of any aerosol based on the weight and size of the particles.

(4) ''Inhalable diameter'' refers to that aerodynamic diameter of a particle which is considered to be inhalable for the organism. It is used to refer to particles which are capable of being inhaled and may be deposited anywhere within the respiratory tract from the trachea to the deep lung (the alveoli). For man, the inhalable diameter is considered here as 15 micrometers or less.

(5) ''Concentration'' refers to an exposure level. Exposure is expressed as weight or volume of test substance per volume of air (mg/1), or as parts per million (ppm).

(6) ''No-observed-effect level'' is the maximum concentration in a test which produces no observed adverse effects. A no-observed-effect level is expressed in terms of weight or volume of test substance given daily per unit volume of air.

(c) *Principle of the test method.* The test substance is administered in graduated concentrations, for at least that part of the pregnancy covering the major period of organogenesis, to several groups of pregnant experimental animals, one exposure level being used per group. Shortly before the expected date of delivery, the pregnant females are sacrificed, the uteri removed, and the contents examined for embryonic or fetal deaths, and live fetuses.

(d) *Limit test.* If a test at an exposure of 5 mg/1 (actual concentration of respirable substances) or, where this is not possible due to physical or chemical properties of the test substance, the maximum attainable concentration, produces no observable developmental toxicity, then a full study using three exposure levels might not be necessary.

(e) *Test procedures*—(1) *Animal selection*—(i) *Species and strain.* Testing shall be performed in at least two mamalian species. Commonly used species include the rat, mouse, rabbit, and hamster. If other mamalian species are used, the tester shall provide justification/reasoning for their selection. Commonly used laboratory strains shall be employed. The strain shall not have low fecundity and shall preferably be characterized for its sensitivity to developmental toxins.

(ii) *Age.* Young adult animals (nulliparous females) shall be used.

(iii) *Sex.* Pregnant female animals shall be used at each exposure level.

(iv) *Number of animals.* At least 20 pregnant rats, mice, or hamsters or 12 pregnant rabbits are required at each exposure level. The objective is to ensure that sufficient pups are produced to permit meaningful evaluation of the potential developmental toxicity of the test substance.

(2) *Control group.* A concurrent control group shall be used. This group shall be exposed to clean, filtered air

under conditions identical to those used for the group exposed to the substance of interest. In addition, a vehicle-exposed group may be necessary when the substance under study requires a vehicle for delivery. It is recommended that during preliminary range finding studies, air vs. vehicle exposure be compared. If there is no substantial difference, air exposure itself would be an appropriate control. If vehicle and air exposure yield different results, both vehicle and air exposed control groups are recommended.

(3) *Concentration levels and concentration selection.* (i) At least three concentration levels with a control and, where appropriate, a vehicle control, shall be used.

(ii) The vehicle shall neither be developmentally toxic nor have effects on reproduction.

(iii) To select the appropriate concentration levels, a pilot or trial study may be advisable. Since pregnant animals have an increased minute ventilation as compared to non-pregnant animals, it is recommended that the trial study be conducted in pregnant animals. Similarly, since presumably the minute ventilation will vary with progression of pregnancy, the animals should be exposed during the same period of gestation as in the main study. In the trial study, the concentration producing embryonic or fetal lethalities or maternal toxicity should be determined.

(iv) Unless limited by the physical/chemical nature or biological properties of the substance, the highest concentration level shall induce some overt maternal toxicity such as reduced body weight or body weight gain, but not more than 10 percent maternal deaths.

(v) The lowest concentration level should not produce any grossly observable evidence of either maternal or developmental toxicity.

(vi) Ideally, the intermediate concentration level(s) shall produce minimal observable toxic effects. If more than one intermediate concentration is used, the concentration levels shall be spaced to produce a gradation of toxic effects.

(4) *Exposure duration.* The duration of exposure shall be at least six hours daily allowing appropriate additional time for chamber equilibrium.

(5) *Observation period.* Day 0 in the test is the day on which a vaginal plug and/or sperm are observed. The exposure period shall cover the period of major organogenesis. This may be taken as days 6 to 15 for rat and mouse, 6 to 14 for hamster, or 6 to 18 for rabbit.

(6) *Inhalation exposure.* (i)(A) The animals shall be tested in inhalation equipment designed to sustain a minimum dynamic air flow of 12 to 15 air changes per hour and ensure an adequate oxygen content of 19 percent and an evenly distributed exposure atmosphere. Where a chamber is used, its design should minimize crowding of the test animals and maximize their exposure to the test substance. This is best accomplished by individual caging. To ensure stability of a chamber atmosphere, the total ''volume'' of the test animals shall not exceed 5 percent of the volume of the test chamber.

(B) Pregnant animals shall not be subjected to beyond the minimum amount of stress. Since whole-body exposure appears to be the least stressful mode of exposure, it is the method preferred. In general oro-nasal or head-only exposure, which is sometimes used to avoid concurrent exposure by the dermal or oral routes, is not recommended because of the associated stress accompanying the restraining of the animals. However, there may be specific instances where it may be more appropriate than whole-body exposure. The tester shall provide justification/reasoning for its selection.

(ii) A dynamic inhalation system with a suitable flow control system shall be used. The rate of air flow shall be adjusted to ensure that conditions throughout the exposure chamber are essentially the same. Test material distribution should be established before animals are committed to dosing. Maintenance of slight negative pressure inside the chamber will prevent leakage of the test substance into the surrounding areas.

(iii) The temperature at which the test is performed should be maintained at 22 °C (±2°) for rodents or 20 °C (±3°) for rabbits. Ideally, the relative humidity should be maintained between 40 to 60 percent, but in certain instances

(e.g., tests of aerosols, use of water vehicle) this may not be practicable.

(7) *Physical measurements.* Measurements or monitoring should be made of the following:

(i) The rate of airflow shall be monitored continuously but shall be recorded at least every 30 minutes.

(ii) The actual concentration of the test substance shall be measured in the breathing zone. During the exposure period the actual concentrations of the test substance shall be held as constant as practicable, monitored continously or intermittently depending on the method of analysis and measured at least at the beginning, at an intermediate time and at the end of the exposure period.

(iii) During the development of the generating system, particle size analysis shall be performed to establish the stability of aerosol concentrations with respect to particle size. During exposure, analysis shall be conducted as often as necessary to determine the consistency of particle size distribution.

(iv) Temperature and humidity shall be monitored continuously and be recorded at least every 30 minutes.

(8) *Food and water during exposure period.* Food should be withheld during exposure. Water may or may not be withheld. If it is not withheld it should not come in direct contact with the test atmospheres.

(9) *Observation of animals.* (i) A gross examination shall be made at least once each day.

(ii) Additional observations should be made daily with appropriate actions taken to minimize loss of animals to the study (e.g., necropsy or refrigeration of animals found dead and isolation or sacrifice of weak or moribund animals).

(iii) Signs of toxicity shall be recorded as they are observed, including the time of onset, the degree and duration.

(iv) Cage-side observations shall include, but not be limited to: Changes in skin and fur, eye and mucous membranes, as well as respiratory, autonomic and central nervous systems, somatomotor activity and behavioral pattern. Particular attention should be directed to observation of tremors, convulsions, salivation, diarrhea, lethargy, sleep, and coma.

(v) Measurements should be made weekly of food consumption for all animals in the study.

(vi) Animals shall be weighed at least weekly.

(vii) Females showing signs of abortion or premature delivery shall be sacrificed and subjected to a thorough macroscopic examination.

(10) *Gross necropsy.* (i) At the time of sacrifice or death during the study, the dam shall be examined macroscopically for any structural abnormalities or pathological changes which may have influenced the pregnancy.

(ii) Immediately after sacrifice or death, the uterus shall be removed, weighed, and the contents examined for embryonic or fetal deaths and the number of viable fetuses. Gravid uterine weights should not be obtained from dead animals if autolysis or where decomposition has occurred. The degree of resorption shall be described in order to help estimate the relative time of death.

(iii) The number of corpora lutea shall be determined for all species except mice.

(iv) The sex of the fetuses shall be determined and they shall be weighed individually, the weights recorded, and the mean fetal weight derived.

(v) Following removal, each fetus shall be examined externally.

(vi) For rats, mice and hamsters, one-third to one-half of each litter shall be prepared and examined for skeletal anomalies, and the remaining part of each litter shall be prepared and examined for soft tissue anomalies using appropriate methods.

(vii) For rabbits, each fetus shall be examined by careful dissection for visceral anomalies and then examined for skeletal anomalies.

(f) *Data and reporting*—(1) *Treatment of results.* Data shall be summarized in tabular form, showing for each test group: the number of animals at the start of the test, the number of pregnant animals, the number and percentages of live fetuses and the number of fetuses with any soft tissue or skeletal abnormalities.

(2) *Evaluation of results.* The findings of a developmental toxicity study shall

be evaluated in terms of the observed effects and the exposure levels producing effects. It is necessary to consider the historical developmental toxicity data on the species/strain tested. A properly conducted developmental toxicity study should provide a satisfactory estimation of a no-effect level.

(3) *Test report.* In addition to the reporting requirements as specified under 40 CFR part 792, subpart J, the following specific information shall be reported:

(i) *Test conditions.* (A) Description of exposure apparatus including design, type, dimensions, source of air, system for generating particulates and aerosols, methods of conditioning air, and the method of housing the animals in a test chamber when this apparatus is used.

(B) The equipment for measuring temperature, humidity, and particulate aerosol concentrations and size shall be described.

(ii) *Exposure data.* These shall be tabulated and presented with mean values and a measure of variability (e.g., standard deviation) and shall include:

(A) Airflow rates through the inhalation equipment.

(B) Temperature of air.

(C) Nominal concentration—total amount of test substance fed into the inhalation equipment divided by volume of air (no standard deviation).

(D) Measured total concentrations (particulate and/or gaseous phases) in test breathing zone.

(E) Particle size distribution (e.g., median aerodynamic diameter of particles with geometric standard deviation) including estimates of the percents of inhalable and non-inhalable portions for the test animals.

(iii) *Animal data.* (A) Toxic response data by concentration.

(B) Species and strain.

(C) Date of death during the study or whether animals survived to termination.

(D) Date of onset and duration of each abnormal sign and its subsequent course.

(E) Feed, body weight and uterine weight data.

(F) Pregnancy and litter data.

(G) Fetal data (live/dead, sex, soft tissue and sketetal defects, resorptions).

(g) *References.* For additional background information on this test guideline the following references should be consulted:

(1) Department of Health and Welfare. *The Testing of Chemicals for Carcinogenicity, Mutagenicity and Teratogenicity*. Minister of Health and Welfare (Canada: Department of Health and Welfare, 1975).

(2) National Academy of Sciences. ''Principles and Procedures for Evaluating the Toxicity of Household Substances.'' A report prepared by the Committee for the Revision of NAS Publication 1138, under the auspices of the Committee on Toxicology, National Research Council, National Academy of Sciences, Washington, DC (1977).

(3) World Health Organization. *Principles for the Testing of Drugs for Teratogenicity*. WHO Technical Report Series No. 364. (Geneva: World Health Organization, 1967).

[50 FR 39397, Sept. 27, 1985, as amended at 52 FR 19076, May 20, 1987; 52 FR 26150, July 13, 1987; 54 FR 21064, May 16, 1989]

§ 798.4700 Reproduction and fertility effects.

(a) *Purpose.* This guideline for two-generation reproduction testing is designed to provide general information concerning the effects of a test substance on gonadal function, conception, parturition, and the growth and development of the offspring. The study may also provide information about the effects of the test substance on neonatal morbidity, mortality, and preliminary data on teratogenesis and serve as a guide for subsequent tests.

(b) *Principle of the test method.* The test substance is administered to parental (P) animals prior to their mating, during the resultant pregnancies, and through the weaning of their F_1 offspring. The substance is then administered to selected F_1 offspring during their growth into adulthood, mating, and production of an F_2 generation, up until the F_2 generation is weaned.

(c) *Test procedures*—(1) *Animal selection*—(i) *Species and strain.* The rat is the preferred species. If another mammalian species is used, the tester shall provide justification/reasoning for its

selection. Strains with low fecundity shall not be used.

(ii) *Age.* Parental (P) animals shall be about 5 to 8 weeks old at the start of dosing.

(iii) *Sex.* (A) For an adequate assessment of fertility, both males and females shall be studied.

(B) The females shall be nulliparous and non-pregnant.

(iv) *Number of animals.* Each test and control group shall contain at least 20 males and a sufficient number of females to yield at least 20 pregnant females at or near term.

(2) *Control groups.* (i) A concurrent control group shall be used. This group shall be an untreated or sham treated control group or if a vehicle is used in administering the test substance, a vehicle control group.

(ii) If a vehicle is used in administering the test substance, the control group shall receive the vehicle in the highest volume used.

(iii) If a vehicle or other additive is used to facilitate dosing, it shall not interfere significantly with absorption of the test substance or produce toxic effects.

(3) *Dose levels and dose selection.* (i) At least three dose levels and a concurrent control shall be used.

(ii) The highest dose level should induce toxicity but not high levels of mortality in the parental (P) animals.

(iii) The lowest dose level should not produce any grossly observable evidence of toxicity.

(iv) Ideally the intermediate dose level(s) should produce minimal observable toxic effects. If more than one intermediate dose is used, dose levels should be spaced to produce a gradation of toxic effects.

(4) *Exposure conditions.* The animals should be dosed with the test substance, ideally, on a 7 days per week basis.

(i) Dosing, mating, delivery, and sacrifice schedule.

(A) Daily dosing of the parental (P) males and females shall begin when they are 5 to 8 weeks old. For both sexes, dosing shall be continued for at least 10 weeks before the mating period.

(B) Dosing of P males shall continue through the 3 week mating period. At the end of the mating period, P males may be sacrificed and examined, or may be retained for possible production of a second litter. If these animals are retained for a second litter, dosing shall be continued. Dosing of the F_1 males saved for mating shall continue from the time they are weaned through the period they are mated with the F_1 females (11 weeks). F_1 males may be sacrificed after the F_1 mating period.

(C) Daily dosing of the P females shall continue through the three week mating period, pregnancy, and to the weaning of the F_1 offspring. Dosing of the F_1 females saved for mating shall continue from the time they are weaned, through the period they are mated with the F_1 males (11 weeks from the time of weaning) pregnancy, and to the weaning of the F_2 offspring.

(ii) All animals are sacrificed as scheduled.

(A) All P males should be sacrificed at the end of the 3-week mating period, or may be retained for possible production of a second litter. If these animals are retained for a second litter, dosing shall be continued.

(B) F_1 males selected for mating should be sacrificed at the end of the three week period of the F_1 mating.

(C) F_1 males and females not selected for mating should be sacrified when weaned.

(D) The P females should be sacrificed upon weaning of their F_1 offspring.

(E) F_1 dams and their F_2 offspring are sacrificed when the offspring are weaned.

(5) *Administration of the test substance*—(i) *Oral studies.* (A) It is recommended that the test substance be administered in the diet or drinking water.

(B) If administered by gavage or capsule, the dosage administered to each animal prior to mating shall be based on the individual animal's body weight and adjusted weekly. During pregnancy the dosage shall be based on the body weight at day 0 and 6 of pregnancy.

(ii) If another route of administration is used, the tester should provide justification and reasoning for its selection.

(6) *Mating procedure*—(i) *Parental.* (A) For each mating, each female shall be

placed with a single male from the same dose level until pregnancy occurs or 1 week has elapsed. If mating has not occurred after 1 week, the female shall be placed with a different male. Paired matings should be clearly identified.

(B) Those pairs that fail to mate should be evaluated to determine the cause of the apparent infertility. This may involve such procedures as additional opportunities to mate with proven fertile males or females, histological examination of the reproductive organs, and examination of the estrus or spermatogenic cycles.

(C) Each day, the females shall be examined for presence of sperm or vaginal plugs. Day 0 of pregnancy is defined as the day vaginal plugs or sperm are found.

(ii) *F_1* cross. (A) For mating the F_1 offspring, one male and one female are randomly selected at weaning from each litter for cross mating with another pup of the same dose level but different litter, to produce the F_2 generation.

(B) F_1 males and females not selected for mating are sacrificed upon weaning.

(iii) *Special housing.* After evidence of copulation, pregnant animals shall be caged separately in delivery or maternity cages. Pregnant animals shall be provided with nesting materials when parturition is near.

(iv) *Standardization of litter sizes.* (A) On day 4 after birth, the size of each litter should be adjusted by eliminating extra pups by random selection to yield, as nearly as possible, 4 males and 4 females per litter.

(B) Whenever the number of male or female pups prevents having 4 of each sex per litter, partial adjustment (for example, 5 males and 3 females) is permitted. Adjustments are not appropriate for litters of less than 8 pups.

(C) Elimination of runts only is not appropriate.

(D) Adjustments of the F_2 litters is conducted in the same manner.

(7) *Observation of animals.* (i) A gross examination shall be made at least once each day. Pertinent behavioral changes, signs of difficult or prolonged parturition, and all signs of toxicity, including mortality, shall be recorded. These observations shall be reported for each individual animal. Food consumption for all animals shall be monitored weekly except during the mating period.

(ii) The duration of gestation shall be calculated from day 0 of pregnancy.

(iii) Each litter should be examined as soon as possible after delivery for the number of pups, stillbirths, live births, sex, and the presence of gross anomalies. Live pups should be counted and litters weighed at birth or soon thereafter, and on days 4, 7, 14, and 21 after parturition.

(iv) Physical or behavioral abnormalities observed in the dams of offspring shall be recorded.

(v) P males and females shall be weighed on the first day of dosing and weekly thereafter. F_1 litters shall be weighed at birth, or soon thereafter, and on days 4, 7, 14, and 21. In all cases, litter weights shall be calculated from the weights of the individual pups.

(8) *Gross necropsy.* (i) A complete gross examination shall be performed on all adult animals, including those which died during the experiment or were killed in moribund conditions.

(ii) Special attention shall be directed to the organs of the reproductive system.

(iii) The following organs and tissues, or representative samples thereof, shall be preserved in a suitable medium for possible future histopathological examination: Vagina; uterus; ovaries; testes; epididymides; seminal vesicles; prostate, pituitary gland; and, target organ(s) when previously identified of all P and F_1 animals selected for mating.

(9) *Histopathology.* Except if carried out in other studies of comparable duration and dose levels the following histopathology shall be performed:

(i) Full histopathology on the organs listed above for all high dose, and control P_1 and F_1 animals selected for mating.

(ii) Organs demonstrating pathology in these animals shall then be examined in animals from the other dose groups.

(iii) Microscopic examination shall be made of all tissues showing gross pathological changes.

(d) *Data and reporting*—(1) *Treatment of results.* Data shall be summarized in

tabular form, showing for each test group the number of animals at the start of the test, the number of animals pregnant, the types of change and the percentage of animals displaying each type of change.

(2) *Evaluation of study results.* (i) An evaluation of test results, including the statistical analysis, based on the clinical findings, the gross necropsy findings, and the microscopic results shall be made and supplied. This should include an evaluation of the relationship, or lack thereof, between the animals' exposure to the test substance and the incidence and severity of all abnormalities.

(ii) In any study which demonstrates an absence of toxic effects, further investigation to establish absorption and bioavailability of the test substance should be considered.

(3) *Test report.* In addition to the reporting requirements as specified under 40 CFR part 792, subpart J the following specific information shall be reported:

(i) Toxic response data by sex and dose, including fertility, gestation, viability and lactation indices, and length of gestation.

(ii) Species and strain.

(iii) Date of death during the study or whether animals survived to termination.

(iv) Toxic or other effects on reproduction, offspring, or postnatal growth.

(v) Date of observation of each abnormal sign and its subsequent course.

(vi) Body weight data for P, F_1, and F_2 animals.

(vii) Necropsy findings.

(viii) Detailed description of all histopathological findings.

(ix) Statistical treatment of results where appropriate.

(e) *References.* For additional background information on this test guideline the following references should be consulted:

(1) Clermont, Y., Perry, B. ''Quantitative Study of the Cell Population of the Seminiferous Tubules in Immature Rats,'' *American Journal of Anatomy*. 100:241–267 (1957).

(2) Goldenthal, E.I. *Guidelines for Reproduction Studies for Safety Evaluation of Drugs for Human Use.* Drug Review Branch, Division of Toxicological Evaluation, Bureau of Science, Food and Drug Administration, Washington, DC (1966).

(3) Hasegawa, T., Hayashi, M., Ebling, F.J.G., Henderson, I.W. *Fertility and Sterility*. (New York: American Elsevier Publishing Co., Inc., 1973).

(4) Oakberg, E.F. ''Duration of Spermatogenesis in the Mouse and Timing of Stages of the Cycle of the Seminiferous Epithelium,'' *American Journal of Anatomy*. 9:507–516 (1956).

(5) Roosen-Runge, E.C. ''The Process of Spermatogenesis in Mammals,'' *Biological Review*. 37:343–377 (1962).

[50 FR 39397, Sept. 27, 1985, as amended at 52 FR 19077, May 20, 1987]

§ 798.4900 Developmental toxicity study.

(a) *Purpose.* In the assessment and evaluation of the toxic characteristics of a chemical, determination of the potential developmental toxicity is important. The developmental toxicity study is designed to provide information on the potential hazard to the unborn which may arise from exposure of the mother during pregnancy.

(b) *Definitions.* (1) Developmental toxicity is the property of a chemical that causes in utero death, structural or functional abnormalities or growth retardation during the period of development.

(2) Dose is the amount of test substance administered. Dose is expressed as weight of test substance (g, mg) per unit weight of a test animal (e.g., mg/kg).

(3) No-observed-effect level is the maximum concentration in a test which produces no observed adverse effects. A no-observed-effect level is expressed in terms of weight of test substance given daily per unit weight of test animal (mg/kg)

(c) *Principle of the test method.* The test substance is administered in graduated doses for at least part of the pregnancy covering the major period of organogenesis, to several groups of pregnant experimental animals, one dose level being used per group. Shortly before the expected date of delivery, the pregnant females are sacrificed, the uteri removed, and the contents examined for embryonic or fetal deaths, and live fetuses.

(d) *Limit test.* If a test at an exposure of at least 1000 mg/kg body weight, using the procedures described for this study, produces no observable developmental toxicity, then a full study using three dose levels might not be necessary.

(e) *Test procedures*—(1) *Animal selection*—(i) *Species and strain.* Testing shall be performed in at least 2 mammalian species. Commonly used species include the rat, mouse, rabbit, and hamster. If other mammalian species are used, the tester shall provide justification/reasoning for their selection. Commonly used laboratory strains shall be employed. The strain shall not have low fecundity and shall preferably be characterized for its sensitivity to developmental toxins.

(ii) *Age.* Young adult animals (nulliparous females) shall be used.

(iii) *Sex.* Pregnant female animals shall be used at each dose level.

(iv) *Number of animals.* At least 20 pregnant rats, mice or hamsters or 12 pregnant rabbits are required at each dose level. The objective is to ensure that sufficient pups are produced to permit meaningful evaluation of the potential developmental toxicity of the test substance.

(2) *Control group.* A concurrent control group shall be used. This group shall be an untreated or sham treated control group, or, if a vehicle is used in administering the test substance, a vehicle control group. Except for treatment with the test substance, animals in the control group(s) shall be handled in an identical manner to test group animals.

(3) *Dose levels and dose selection.* (i) At least 3 dose levels with a control and, where appropriate, a vehicle control, shall be used.

(ii) The vehicle shall neither be developmentally toxic nor have effects on reproduction.

(iii) To select the appropriate dose levels, a pilot or trial study may be advisable. It is not always necessary to carry out a trial study in pregnant animals. Comparison of the results from a trial study in non-pregnant, and the main study in pregnant animals will demonstrate if the test substance is more toxic in pregnant animals. If a trial study is carried out in pregnant animals, the dose producing embryonic or fetal lethalities or maternal toxicity shall be determined.

(iv) Unless limited by the physical/chemical nature or biological properties of the substance, the highest dose level shall induce some overt maternal toxicity such as reduced body weight or body weight gain, but not more than 10 percent maternal deaths.

(v) The lowest dose level should not produce any grossly observable evidence of either maternal or developmental toxicity.

(vi) Ideally, the intermediate dose level(s) should produce minimal observable toxic effects. If more than one intermediate concentration is used, the concentration levels should be spaced to produce a gradation of toxic effects.

(4) *Observation period.* Day 0 in the test is the day on which a vaginal plug and/or sperm are observed. The dose period shall cover the period of major organogenesis. This may be taken as days 6 to 15 for rat and mouse, 6 to 14 for hamster, or 6 to 18 for rabbit.

(5) *Administration of test substance.* The test substance or vehicle is usually administered orally, by oral intubation unless the chemical or physical characteristics of the test substance or pattern of human exposure suggest a more appropriate route of administration. The test substance shall be administered approximately the same time each day.

(6) *Exposure conditions.* The female test animals are treated with the test substance daily throughout the appropriate treatment period. When given by gavage, the dose may be based on the weight of the females at the start of substance administration, or, alternatively, in view of the rapid weight gain which takes place during pregnancy, the animals may be weighed periodically and the dosage based on the most recent weight determination.

(7) *Observation of animals.* (i) A gross examination shall be made at least once each day.

(ii) Additional observations shall be made daily with appropriate actions taken to minimize loss of animals to the study (e.g., necropsy or refrigeration of those animals found dead and isolation or sacrifice of weak or moribund animals).

(iii) Signs of toxicity shall be recorded as they are observed, including the time of onset, the degree and duration.

(iv) Cage-side observations shall include, but not be limited to: changes in skin and fur, eye and mucous membranes, as well as respiratory, autonomic and central nervous systems, somatomotor activity and behavioral pattern.

(v) Measurements should be made weekly of food consumption for all animals in the study.

(vi) Animals shall be weighed at least weekly.

(vii) Females showing signs of abortion or premature delivery shall be sacrificed and subjected to a thorough macroscopic examination.

(8) *Gross necropsy*. (i) At the time of sacrifice or death during the study, the dam shall be examined macroscopically for any structural abnormalities or pathological changes which may have influenced the pregnancy.

(ii) Immediately after sacrifice or as soon as possible after death, the uterus shall be removed and the contents examined for embryonic or fetal deaths and the number of viable fetuses. The degree of resorption shall be described in order to help estimate the relative time of death of the conceptus. The weight of the gravid uterus should be recorded for dams that are sacrificed. Gravid uterine weights should not be obtained from dead animals if autolysis or decomposition has occurred.

(iii) The number of corpora lutea shall be determined for all species except mice.

(iv) The sex of the fetuses shall be determined and they shall be weighed individually, the weights recorded, and the mean fetal weight derived.

(v) Following removal, each fetus shall be examined externally.

(vi) For rats, mice and hamsters, one-third to one-half of each litter shall be prepared and examined for skeletal anomalies, and the remaining part of each litter shall be prepared and examined for soft tissue anomalies using appropriate methods.

(vii) For rabbits, each fetus shall be examined by careful dissection for visceral anomalies and then examined for skeletal anomalies.

(f) *Data and reporting*—(1) *Treatment of results.* Data shall be summarized in tablular form, showing for each test group: the number of animals at the start of the test, the number of pregnant animals, the number and percentages of live fetuses and the number of fetuses with any soft tissue or skeletal abnormalities.

(2) *Evaluation of results.* The findings of a developmental toxicity study shall be evaluated in terms of the observed effects and the exposure levels producing effects. It is necessary to consider the historical developmental toxicity data on the species/strain tested. A properly conducted developmental toxicity study should provide a satisfactory estimation of a no-effect level.

(3) *Test report*. In addition to the reporting requirements as specified under 40 CFR part 792, subpart J the following specific information shall be reported:

(i) Toxic response data by concentration.

(ii) Species and strain.

(iii) Date of death during the study or whether animals survived to termination.

(iv) Date of onset and duration of each abnormal sign and its subsequent course.

(v) Food, body weight and uterine weight data.

(vi) Pregnancy and litter data.

(vii) Fetal data (live/dead, sex, soft tissue and skeletal defects, resorptions).

(g) *References.* For additional background information on this test guideline the following references should be consulted:

(1) Department of Health and Welfare. *The Testing of Chemicals for Carcinogenicity, mutagenicity and Teratogenicity*. Minister of Health and Welfare (Canada: Department of Health and Welfare, 1975).

(2) National Academy of Sciences. ''Principles and Procedures for Evaluating the Toxicity of Household Substances.'' A report prepared by the Committee for the Revision of NAS Publication 1138, under the auspices of the Committee on Toxicology, National Research Council, National

Academy of Sciences, Washington, DC (1977).

(3) World Health Organization. *Principles for the Testing of Drugs for Teratogenicity*. WHO Technical Report Series No. 364. (Geneva: World Health Organization, (1967).

[50 FR 39397, Sept. 27, 1985, as amended at 52 FR 19077, May 20, 1987]

Subpart F—Genetic Toxicity

§ 798.5195 Mouse biochemical specific locus test.

(a) *Purpose.* The mouse biochemical specific locus test (MBSL) may be used to detect and quantitate mutations originating in the germ line of a mammalian species.

(b) *Definitions.* (1) A biochemical specific locus mutation is a genetic change resulting from a DNA lesion causing alterations in proteins that can be detected by electrophoretic methods.

(2) The germ line is comprised of the cells in the gonads of higher eukaryotes, which are the carriers of the genetic information for the species.

(c) *Reference substances.* Not applicable.

(d) *Test method*—(1) *Principle.* The principle of the MBSL is that heritable damage to the genome can be detected by electrophoretic analysis of proteins in the tissues of the progeny of mice treated with germ cell mutagens.

(2) *Description.* For technical reasons, males rather than females are generally treated with the test chemical. Treated males are then mated to untreated females to produce F1 progeny. Both blood and kidney samples are taken from progeny for electrophoretic analysis. Up to 33 loci can be examined by starch-gel electrophoresis and broad-range isoelectric focussing. Mutants are identified by variations from the normal electrophoretic pattern. Presumed mutants are bred to confirm the genetic nature of the change.

(3) *Animal selection*—(i) *Species and strain.* Mice shall be used as the test species. Although the biochemical specific locus test could be performed in a number of in bred strains, in the most frequently used cross, C57BL/6 females are mated to DBA/2 males to produce (C57BL/6×DBA/2) F1 progeny for screening.

(ii) *Age.* Healthy, sexually-mature (at least 8 weeks old) animals shall be used for treatment and breeding.

(iii) *Number.* A decision on the minimum number of treated animals should take into account possible effects of the test chemical on the fertility of the treated animals. Other considerations should include:

(A) The production of concurrent spontaneous controls.

(B) The use of positive controls.

(C) The power of the test.

(4) *Control groups*—(i) *Concurrent controls.* An appropriate number of concurrent control loci shall be analyzed in each experiment. These should be partly derived from matings of untreated animals (from 5 to 20 percent ofthe treated matings), although some data on control loci can be taken from the study of the alleles transmitted from the untreated parent in the experimental cross. However, any laboratory which has had no prior experience with the test shall produce a spontaneous control sample of about 5,000 progeny animals and a positive control (using 100 mg/kg ethylnitrosourea) sample of at least 1,200 offspring.

(ii) *Historical controls.* Long-term, accumulated spontaneous control data (currently, 1 mutation in 1,200,000 control loci screened) are available for comparative purposes.

(5) *Test chemicals*—(i) *Vehicle.* When possible, test chemicals shall be dissolved or suspended in distilled water or buffered isotonic saline. Water-insoluble chemicals shall be dissolved or suspended in appropriate vehicles. The vehicle used shall neither interfere with the test chemical nor produce major toxic effects. Fresh preparations of the test chemical should be employed.

(ii) *Dose levels.* Usually, only one dose need be tested. This should be the maximum tolerated dose (MTD), the highest dose tolerated without toxic effects. Any temporary sterility induced due to elimination of spermatogonia at this dose must be of only moderate duration, as determined by are turn of males to fertility within 80 days after

treatment. For evaluation of dose-response, it is recommended that at least two dose levels be tested.

(iii) *Route of administration.* Acceptable routes of administration include, but are not limited to, gavage, inhalation, and mixture with food or water, and intraperitoneal or intravenous injections.

(e) *Test performance*—(1) *Treatment and mating.* Male DBA/2 mice shall be treated with the test chemical and mated to virgin C57BL/6 females immediately after cessation of treatment. Each treated male shall be mated to new virgin C57BL/6 females each week. Each pairing will continue for a week until the next week's mating is to begin. This mating schedule permits sampling of all post-spermatogonial stages of germ-cell development during the first 7 weeks after exposure. Spermatogonial stem cells are studied thereafter. Repeated mating cycles should be conducted until sufficient offspring have been obtained to meet the power criterion of the assay for spermatogonial stem cells.

(2) *Examination of offspring*—(i) *Birth and weaning.* Offspring shall be examined at birth and at weaning for externally detectable changes in morphology and behavior; these could be due to dominant mutations. Such characteristics may include, but are not limited to, variations in coat color, appearance of eyes, size (in which case weighing of variant animals and littermates should be carried out), fur texture, etc. Gross changes in external form and behavior shall also be sought. Scrutiny of such visible characteristics of all animals shall be made during all subsequent manipulations of the animals.

(ii) *Tissue sampling.* Blood (about 0.1 mL) and one kidney shall be removed from progeny mice under anesthesia. Both tissues are then prepared for analysis by electrophoresis.

(iii) *Electrophoresis.* The gene products of 6 loci shall be analyzed in the blood sample by broad-range isoelectric focussing and of 27 loci in the kidney sample by starch-gel electrophoresis and enzyme-specific staining. Details on these procedures are included in paragraphs (g)(1) through (g)(3) of this section.

(iv) *Mutant identification.* Presumptive electrophoretic mutants shall be identified by variation from the normal electrophoretic banding patterns. Reruns of all variant samples shall be performed to confirm the presence of altered banding patterns. Samples from parents of progeny exhibiting banding pattern variations shall be assayed to determine whether the variant was induced by the experimental treatment or was pre-existing. All treatment-induced variants are bred to determine the genetic nature of the change.

(f) *Data and reports*—(1) *Treatment of results.* Data shall be presented in tabular form and shall permit independent analysis of cell stage-specific effects, and dose-dependent phenomena. The data shall be recorded and analyzed in such a way that clusters of identical mutations are clearly identified. The individual mutants detected shall be thoroughly described. In addition, concurrent positive control data (if employed) and spontaneous control data shall also be tabulated. These concurrent controls shall be added to, as well as compared with, the historical control data.

(2) *Statistical evaluation.* Data shall be evaluated by appropriate statistical methods.

(3) *Interpretation of results.* (i) There are several criteria for determining a positive response, one of which is a statistically significant dose-related increase in the frequency of electrophoretic mutations. Another criterion may be based upon detection of a reproducible and statistically significant positive response for at least one of these test points.

(ii) A test chemical which does not produce a statistically significant increase in the frequency of electrophoretic mutations over the spontaneous frequency, or a statistically significant and reproducible positive response for at least one of the test points, is considered nonmutagenic in this system, provided that the sample size is sufficient to exclude a biologically significant increase in mutation frequency.

(iii) Both biological and statistical significance should be considered together in the evaluation.

(4) *Test evaluation.* (i) Positive results in the MBSL indicate that, under the test conditions, the test chemical induces heritable gene mutations in a mammalian species.

(ii) Negative results indicate that, under the test conditions, the test chemical does not induce heritable genemutations in a mammalian species.

(5) *Test report.* In addition to the reporting requirements as specified under 40 CFR part 792, subpart J, and paragraph (h) of this section, the following specific information shall be reported:

(i) Strain, age and weight of animals used; numbers of animals of each sex in experimental and control groups.

(ii) Test chemical vehicle, doses used, rationale for dose selection, and toxicity data, if available.

(iii) Route and duration of exposure.

(iv) Mating schedule.

(v) Number of loci screened for both treated and spontaneous data.

(vi) Criteria for scoring mutants.

(vii) Number of mutants found/locus.

(viii) Loci at which mutations were found.

(ix) Use of concurrent negative and positive controls.

(x) Dose-response relationship, if applicable.

(g) *References.* For additional background information on this test guideline, the following references should be consulted:

(1) Personal communication from Susan E. Lewis, Ph.D. to Dr. Michael Cimino, U.S. EPA, OPPT, October 5, 1989.

(2) Johnson, F.M., G.T. Roberts, R.K. Sharma, F.Chasalow, R. Zweidinger, A. Morgan, R.W. Hendren, and S.E.Lewis. ''The detection of mutants in mice by electrophoresis: Results of a model induction experiment with procarbazine.'' *Genetics* 97:113–124 (1981).

(3) Johnson, F.M. and S.E. Lewis. ''Mutation rate determinations based on electrophoretic analysis of laboratory mice.'' *Mutation Research* 82:125–135 (1981a).

(4) Johnson, F.M. and S.E. Lewis. ''Electrophoretically detected germinal mutations induced by ethylnitrosourea in the mouse.'' *Proceedings of the National Academy of Sciences* 78:3138–93141 (1981b).

(5) Lewis, S.E., C. Felton, L.B. Barnett, W. Generoso, N. Cacheiro, and M.D. Shelby. ''Dominant visible and electrophoretically expressed mutations induced in male mice exposed to ethylene oxide by inhalation.'' *Environmental Mutagenesis* 8:867–872 (1986).

(h) *Additional requirements.* Testing facilities conducting the mouse biochemical specific locus test in accordance with this section shall, in addition to adhering to the provisions of §§ 792.190 and 792.195 of this chapter, obtain, adequately identify, and retain for at least 10 years, acceptable 35–mm photographs (and their negatives) of the stained isoelectric-focussing columns and the stained starch-gels obtained following analyses of blood and kidney preparations, respectively, from mutant mice, their siblings, and their parents.

[55 FR 12641, Apr. 5, 1990]

§ 798.5200 Mouse visible specific locus test.

(a) *Purpose.* The mouse visible specific locus test (MSLT) may be used to detect and quantitate mutations in the germ line of a mammalian species.

(b) *Definitions.* (1) A visible specific locus mutation is a genetic change that alters factors responsible for coat color and other visible characteristics of certain mouse strains.

(2) The germ line is the cells in the gonads of higher eukaryotes which are the carriers of the genetic information for the species.

(c) *Reference substances.* Not applicable.

(d) *Test method*—(1) *Principle.* (i) The principle of the MSLT is to cross individuals who differ with respect to the genes present at certain specific loci, so that a genetic alteration involving the standard gene at any one of these loci will produce an offspring detectably different from the standard heterozygote. The genetic change may be detectable by various means, depending on the loci chosen to be marked.

(ii) Three variations of the method currently exist for detecting newly arising point mutations in mouse germ cells:

(A) The visible specific locus test using either 5 or 7 loci.

(B) The biochemical specific locus test using up to 20 enzymes.

(C) The test for mutations at histocompatibility loci.

(iii) Of the three tests, the visible specific locus test has been most widely used in assessing genetic hazard due to environmental agents. It is the method described in this guideline.

(2) *Description.* For technical reasons, males rather than females are generally treated with the test agent. Treated males are then mated to females which are genetically homozygous for certain specific visible marker loci. Offspring are examined in the next generation for evidence that a new mutation has arisen.

(3) *Animal selection*—(i) *Species and strain.* Mice shall be used as the test species. Male mice shall be either $(C_3H\times101)F_1$ or $(101\times C_3H)F_1$ hybrids. Females shall be T stock virgins.

(ii) *Age.* Healthy sexually mature animals shall be used.

(iii) *Number.* A decision on the minimum number of treated animals should take into account the spontaneous variation of the biological characterization being evaluated. Other considerations should include:

(A) The use of either historical or concurrent controls.

(B) The power of the test.

(C) The minimal rate of induction required.

(D) The use of positive controls.

(E) The level of significance desired.

(iv) *Assignment to groups.* Animals shall be randomized and assigned to treatment and control groups.

(4) *Control groups*—(i) *Concurrent controls.* The use of positive or spontaneous controls is left to the discretion of the investigator. However, any laboratory which has had no prior experience with the test shall, at its first attempt, produce a negative control sample of 20,000 and a positive control, using 100 mg/kg 1-ethyl-nitrosourea, in a sample of 5,000 offspring.

(ii) *Historical controls.* Long term, accumulated spontaneous control data of 43/801,406 are available for comparative purposes.

(5) *Test chemicals*—(i) *Vehicle.* When possible, test chemicals should be dissolved or suspended in distilled water or isotonic saline buffered appropriately, if needed, for stability. Water-insoluble chemicals shall be dissolved or suspended in appropriate vehicles. The vehicle used shall neither interfere with the test compound nor produce major toxic effects. Fresh preparations of the test chemical should be employed.

(ii) *Dose levels.* Usually, only one dose level need be tested. This should be the highest dose tolerated without toxic effects, provided that any temporary sterility induced due to elimination of spermatagonia is of only moderate duration, as determined by a return of males to fertility within 80 days after treatment. For evaluation of dose-response, it is recommended that at least two dose levels be tested.

(iii) *Route of administration.* Acceptable routes of administration include gavage, inhalation, admixture with food or water, and IP or IV injections.

(e) *Test performance*—(1) *Treatment and mating.* Hybrid F_1 (C_3 H×101 or 101×C_3 H) male mice shall be treated with the test substance and immediately mated to virgin T stock females. Each treated male shall be mated to a fresh group of 2 to 4 virgin females each week for 7 weeks, after which he shall be returned to the first group of females and rotated through the seven sets of females repeatedly. This mating schedule generally permits sampling of all postspermatagonial stages of germ cell development during the first 7 weeks and rapid accumulation of data for exposed spermatagonial stem cells thereafter. Repeated mating cycles should be conducted until the entire spermatogonial cycle has been evaluated and enough offspring have been obtained to meet the power criterion of the assay.

(2) *Examination of offspring.* (i) Offspring may be examined at (or soon after) birth but must be examined at about 3 weeks of age at which time the numbers of mutant and nonmutant offspring in each litter shall be recorded.

(ii) Nonmutant progeny should be discarded. Mutant progeny shall be subjected to genetic tests for verification.

(f) *Data and report*—(1) *Treatment of results.* Data shall be presented in tabular form and shall permit independent analysis of cell stage specific effects and dose dependent phenomena. The data shall be recorded and analyzed in such a way that clusters of identical mutations are clearly identified. The individual mutants detected shall be thoroughly described. In addition, concurrent positive and negative control data, if they are available, shall be tabulated so that it is possible to differentiate between concurrent (when available) and long-term accumulated mutation frequencies.

(2) *Statistical evaluation.* Data shall be evaluated by appropriate statistical methods.

(3) *Interpretation of results.* (i) There are several criteria for determining a positive result, one of which is a statistically significant dose-related increase in the number of specific locus mutations. Another criterion may be based upon detection of a reproducible and statistically significant positive response for at least one of the test points.

(ii) A test substance which does not produce either a statistically significant dose-related increase in the number of specific locus mutations or a statistically significant and reproducible positive response at any one of the test points is considered nonmutagenic in this system.

(iii) Both biological and statistical significance should be considered together in the evaluation.

(4) *Test evaluation.* (i) Positive results in the MSLT indicate that under the test conditions the test substance induces heritable gene mutations in the test species.

(ii) Negative results indicate that under the test conditions the test substance does not induce heritable gene mutations in the test species.

(5) *Test report.* In addition to the reporting requirements as specified under 40 CFR part 792, subpart J, and paragraph (h) of this section, the following specific information shall be reported:

(i) Strain, age and weight of animals used, number of animals of each sex in experimental and control groups.

(ii) Test chemical vehicle, doses used and rationale for dose selection, toxicity data.

(iii) Route and duration of exposure.

(iv) Mating schedule.

(v) Time of examination for mutant progeny.

(vi) Criteria for scoring mutants.

(vii) Use of concurrent or negative controls.

(viii) Dose response relationship, if applicable.

(g) *References.* For additional background information on this test guideline the following references should be consulted:

(1) Russell, L.B., Shelby, P.B., von Halle, E., Sheridan, W., Valcovic, L. The mouse specific locus test with agents other than radiations: interpretation of data and recommendations for future work: A report of the U.S. EPA's Gene-Tox Program,'' *Mutation Research,* 86:329–354 (1981).

(2) [Reserved]

(h) *Additional requirements.* Testing facilities conducting the mouse visible specific locus test in accordance with this section shall, in addition to adhering to the provisions of §§ 792.190 and 792.195 of this chapter, obtain, and retain for at least 10 years, acceptable 35–mm color photographs (and their negatives) demonstrating the visible mutations observed in mutant animals and the lack of such mutations in their siblings and parents.

[50 FR 39397, Sept. 27, 1985, as amended at 52 FR 19078, May 20, 1987; 55 FR 12643, Apr. 5, 1990]

§ 798.5265 The salmonella typhimurium reverse mutation assay.

(a) *Purpose.* The *Salmonella typhimurium* histidine (his) reversion system is a microbial assay which measures $his^- \rightarrow his^=$ reversion induced by chemicals which cause base changes or frameshift mutations in the genome of this organism.

(b) *Definitions.* (1) A reverse mutation assay in *Salmonella typhimurium* detects mutation in a gene of a histidine requiring strain to produce a histidine independent strain of this organism.

(2) Base pair mutagens are agents which cause a base change in the DNA. In a reversion assay, this change may

occur at the site of the original mutation or at a second site in the chromosome.

(3) Frameshift mutagens are agents which cause the addition or deletion of single or multiple base pairs in the DNA molecule.

(c) *Reference substances.* These may include, but need not be limited to, sodium azide, 2-nitrofluorene, 9-aminoacridine, 2-aminoanthracene, congo red, benzopurpurin 4B, trypan blue or direct blue 1.

(d) *Test method*—(1) *Principle.* Bacteria are exposed to test chemical with and without a metabolic activation system and plated onto minimal medium. After a suitable period of incubation, revertant colonies are counted and compared to the number of spontaneous revertants in an untreated and/or vehicle control culture.

(2) *Description.* Several methods for performing the test have been described. Among those used are:

(i) The direct plate incorporation method.

(ii) The preincubation method.

(iii) The azo-reduction method.

The procedures described here are for the direct plate incorporation method and the azo-reduction method.

(3) *Strain selection*—(i) *Designation.* At the present time four strains, TA 1535, TA 1537, TA 98 and TA 100 should be used. The use of other strains in addition to these four is left to the discretion of the investigator.

(ii) *Preparation and storage.* Recognized methods of stock culture preparation and storage should be used. The requirement of histidine for growth should be demonstrated for each strain. Other phenotypic characteristics should be checked using such methods as crystal violet sensitivity and resistance to ampicillin. Spontaneous reversion frequency should be in the range expected either as reported in the literature or as established in the laboratory by historical control values.

(iii) *Bacterial growth.* Fresh cultures of bacteria should be grown up to the late exponential or early stationary phase of growth (approximately 10^8–10^9 cells per ml).

(4) *Metabolic activation.* Bacteria should be exposed to the test substance both in the presence and absence of an appropriate metabolic activation system. For the direct plate incorporation method, the most commonly used system is a cofactor supplemented postmitochondrial fraction prepared from the livers of rodents treated with enzyme inducing agents such as Aroclor 1254. For the azo-reduction method, a cofactor supplemented postmitochondrial fraction prepared from the livers of untreated hamsters is preferred. For this method, the cofactor supplement should contain flavin mononucleotide, exogenous glucose 6-phosphate dehydrogenase, NADH and excess of glucose-6-phosphate.

(5) *Control groups*—(i) *Concurrent controls.* Concurrent positive and negative (untreated and/or vehicle) controls shall be included in each experiment. Positive controls shall ensure both strain responsiveness and efficacy of the metabolic activation system.

(ii) *Strain specific positive controls.* Strain specific positive controls shall be included in the assay. Examples of strain specific positive controls are as follows:

(A) Strain TA 1535, TA 100, sodium azide.

(B) TA 98, 2-nitrofluorene.

(C) TA 1537, 9-aminoacridine.

(iii) *Positive controls to ensure the efficacy of the activation system.* The positive control reference substance for tests including a metabolic activation system should be selected on the basis of the type of activation system used in the test. 2-Aminoanthracene is an example of a positive control compound in plate-incorporation tests using postmitochondrial fractions from the livers of rodents treated with enzyme inducing agents such as Aroclor-1254. Congo red is an example of a positive control compound in the azo-reduction method. Other positive control reference substances may be used.

(iv) *Class-specific positive controls.* The azo-reduction method should include positive controls from the same class of compounds as the test agent wherever possible.

(6) *Test chemicals*—(i) *Vehicle.* Test chemicals and positive control reference substances should be dissolved or suspended in an appropriate vehicle and then further diluted in vehicle for use in the assay.

(ii) *Exposure concentrations.* (A) The test should initially be performed over a broad range of concentrations. Among the criteria to be taken into consideration for determining the upper limits of test chemical concentration are cytotoxicity and solubility. Cytotoxicity of the test chemical may be altered in the presence of metabolic activation systems. Toxicity may be evidenced by a reduction in the number of spontaneous revertants, a clearing of the background lawn or by the degree of survival of treated cultures. Relatively insoluble compounds should be tested up to the limits of solubility. For freely soluble nontoxic chemicals, the upper test chemical concentration should be determined on a case by case basis.

(B) Generally, a maximum of 5 mg/plate for pure substances is considered acceptable. At least 5 different amounts of test substance shall be tested with adequate intervals between test points.

(C) When appropriate, a single positive response shall be confirmed by testing over a narrow range of concentrations.

(e) *Test performance*—(1) *Direct plate incorporation method.* For this test without metabolic activation, test chemica1 and 0.1 m1 of a fresh bacterial culture should be added to 2.0 ml of overlay agar. For tests with metabolic activation, 0.5 ml of activation mixture containing an adequate amount of postmitochondrial fraction should be added to the agar overlay after the addition of test chemical and bacteria. Contents of each tube shall be mixed and poured over the surface of a selective agar plate. Overlay agar shall be allowed to solidify before incubation. At the end of the incubation period, revertant colonies per plate shall be counted.

(2) *Azo-reduction method.* (i) For this test with metabolic activation, 0.5 ml of S–9 mix containing 150 ul of S–9 and 0.1 ml of bacterial culture should be added to a test tube kept on ice. One-tenth milliliter of chemical should be added, and the tubes should be incubated with shaking at 30 °C for 30 min. At the end of the incubation period, 2.0 ml of agar should be added to each tube, the contents mixed and poured over the surface of a selective agar plate. Overlay agar shall be allowed to solidify before incubation. At the end of the incubation period, revertant colonies per plate shall be counted.

(ii) For tests without metabolic activation, 0.5 ml of buffer should be used in place of the 0.5 ml of S–9 mix. All other procedures shall be the same as those used for the test with metabolic activation.

(3) *Other methods.* Other methods may also be appropriate.

(4) *Media.* An appropriate selective medium with an adequate overlay agar shall be used.

(5) *Incubation conditions.* All plates within a given experiment shall be incubated for the same time period. This incubation period shall be for 48–72 hours at 37 °C.

(6) *Number of cultures.* All plating should be done at least in triplicate.

(f) *Data and report*—(1) *Treatment of results.* Data shall be presented as number of revertant colonies per plate for each replicate and dose. The numbers of revertant colonies on both negative (untreated and/or vehicle) and positive control plates shall also be presented. Individual plate counts, the mean number of revertant colonies per plate and standard deviation shall be presented for test chemical and positive and negative (untreated and/or vehicle) controls.

(2) *Statistical evaluation.* Data should be evaluated by appropriate statistical methods.

(3) *Interpretation of results.* (i) There are several criteria for determining a positive result, one of which is a statistically significant dose-related increase in the number of revertants. Another criterion may be based upon detection of a reproducible and statistically significant positive response for at least one of the test substance concentrations.

(ii) A test substance which does not produce either a statistically significant dose-related increase in the number of revertants or a statistically significant and reproducible positive response at any one of the test points is considered nonmutagenic in this system.

(iii) Both biological and statistical significance should be considered together in the evaluation.

(4) *Test evaluation.* (i) Positive results from the *S. typhimurium* reverse mutation assay indicate that, under the test conditions, the test substance induces point mutations by base changes or frameshifts in the genome of this organism.

(ii) Negative results indicate that under the test conditions the test substance is not mutagenic in *S. typhimurium.*

(5) *Test report.* In addition to the reporting recommendations as specified under 40 CFR part 792, subpart J, the following specific information shall be reported:

(i) Bacterial strain used.

(ii) Metabolic activation system used (source, amount and cofactor); details of preparations of S–9 mix.

(iii) Dose levels and rationale for selection of dose.

(iv) Positive and negative controls.

(v) Individual plate counts, mean number of revertant colonies per plate, standard deviation.

(vi) Dose-response relationship, if applicable.

(g) *References.* For additional background information on this test guideline the following references should be consulted:

(1) Ames, B.N., McCann, J., Yamasaki, E. ''Methods for detecting carcinogens and mutagens with the *Salmonella/* mammalian-microsome mutagenicity test,'' *Mutation Research* 31:347–364 (1975).

(2) de Serres, F.J., Shelby, M.D. ''The *Salmonella* mutagenicity assay: recommendations,'' *Science* 203:563–565 (1979).

(3) Prival, M.J., Mitchell, V.D. ''Analysis of a method for testing azo dyes for mutagenic activity in *Salmonella typhimurium* in the presence of flavin mononucleotide and hamster liver S–9,'' *Mutation Research* 97:103–116 (1982).

(4) Vogel, H.J., Bonner, D.M. ''Acetylornithinase of *E. coli:* partial purification and some properties,'' *Journal of Biological Chemistry*. 218:97–106 (1956).

[50 FR 39397, Sept. 27, 1985, as amended at 52 FR 19078, May 20, 1987]

§ 798.5275 Sex-linked recessive lethal test in drosophila melanogaster.

(a) *Purpose.* The sex-linked recessive lethal (SLRL) test using *Drosophila melanogaster* detects the occurrence of mutations, both point mutations and small deletions, in the germ line of the insect. This test is a forward mutation assay capable of screening for mutations at about 800 loci on the X-chromosome. This represents about 80 percent of all X-chromosome loci. The X-chromosome represents approximately one-fifth of the entire haploid genome.

(b) *Definitions.* (1) Lethal mutation is a change in the genome which, when expressed, causes death to the carrier.

(2) Recessive mutation is a change in the genome which is expressed in the homozygous or hemizygous condition.

(3) Sex-Linked genes are present on the sex (X or Y) chromosomes. Sex-linked genes in the context of this guideline refer only to those located on the X-chromosome.

(c) *Reference substances.* These may include, but need not be limited to, ethyl methanesulfonate or N-nitrosodimethylamine.

(d) *Test method*—(1) *Principle.* Mutations in the X-chromosome of *D. melanogaster* are phenotypically expressed in males carrying the mutant gene. When the mutation is lethal in the hemizygous condition, its presence is inferred from the absence of one class of male offspring out of the two that are normally produced by a heterozygous female. The SLRL test takes advantage of these facts by means of specially marked and arranged chromosomes.

(2) *Description.* Wild-type males are treated and mated to appropriate females. Female offspring are mated individually to their brothers, and in the next generation the progeny from each separate dose are scored for phenotypically wild-type males. Absence of these males indicates that a sex-linked recessive lethal mutation has occurred in a germ cell of the P_1 male.

(3) *Drosophila stocks.* Males of a well-defined wild type stock and females of the Muller-5 stock may be used. Other appropriately marked female stocks

with multiple inverted X-chromosomes may also be used.

(4) *Control groups*—(i) *Concurrent controls.* Concurrent positive and negative (vehicle) controls shall be included in each experiment.

(ii) *Positive controls.* Examples of positive controls include ethyl methanesulfonate and N-nitroso-dimethylamine.

(iii) *Other positive controls.* Other positive control reference substances may be used.

(iv) *Negative controls.* Negative (vehicle) controls shall be included. The size of the negative (vehicle) control group shall be determined by the availability of appropriate laboratory historical control data.

(5) *Test chemicals*—(i) *Vehicle.* Test chemicals should be dissolved in water. Compounds which are insoluble in water may be dissolved or suspended in appropriate vehicles (e.g., a mixture of ethanol and Tween-60 or 80) and then diluted in water or saline prior to administration. Dimethylsulfoxide should br avoided as a vehicle.

(ii) *Dose levels.* For the initial assessment of mutagenicity, it is sufficient to test a single dose of the test substance for screening purposes. This dose should be the maximum tolerated dose, or that which produces some indication of toxicity, or shall be the highest dose attainable. For dose-response purposes, at least three additional dose levels should be used.

(iii) *Route of administration.* Exposure may be oral, by injection or by exposure to gases or vapors. Feeding of the test compound may be done in sugar solution. When necessary, substances may be dissolved in 0.7 percent NaCl solution and injected into the thorax or abdomen.

(e) *Test performance*—(1) *Treatment and mating.* Wild-type males (3 to 5 days old) shall be treated with the test substance and mated individually to an appropriate number of virgin females from the Muller-5 stock or females from another appropriately marked (with multiply-inverted X-chromosomes) stock. The females shall be replaced with fresh virgins every 2 to 3 days to cover the entire germ cell cycle. The offspring of these females are scored for lethal effects corresponding to the effects on mature sperm, mid or late stage spermatids, early spermatids, spermatocytes and spermatogonia at the time of treatment.

(2) *$F_1$1 matings.* Heterozygous F_1 females from the above crosses shall be allowed to mate individually (i.e., one female per vial) with their brothers. In the F_2 generation, each culture shall be scored for the absence of wild-type males. If a culture appears to have arisen from an F_1 female carrying a lethal in the parental X-chromosome (i.e., no males with the treated chromosome are observed), daughters of that female with the same genotype shall be tested to ascertain if the lethality is repeated in the next generation.

(3) *Number of matings.* (i) The test should be designed with a predetermined sensitivity and power. The number of flies in each group should reflect these defined parameters. The spontaneous mutant frequency observed in the appropriate control group will strongly influence the number of treated chromosomes that must be analysed to detect substances which show mutation rates close to those of the controls.

(ii) Test results should be confirmed in a separate experiment.

(f) *Data and report*—(1) *Treatment of results.* Data shall be tabulated to show the number of chromosomes tested, the number of nonfertile males and the number of lethal chromosomes at each exposure concentration and for each mating period for each male treated. Numbers of clusters of different size per male shall be reported.

(2) *Statistical evaluation.* Data shall be evaluated by appropriate statistical techniques.

(3) *Interpretation of results.* (i) There are several criteria for determining a positive result, one of which is a statistically significant dose-related increase in the number of sex-lined recessive lethals. Another criterion may be based upon detection of a reproducible and statistically significant positive response for at least one of the test points.

(ii) A test substance which does not produce either a statistically significant dose-related increase in the number of sex-linked recessive lethals or a statistically significant and reproducible positive response at any one of the test points is considered non-mutagenic in this system.

(iii) Both biological and statistical significance should be considered together in the evaluation.

(4) *Test evaluation.* (i) Positive results in the SLRL test in *D. melanogaster* indicate that under the test conditions the test agent causes mutations in germ cells of this insect.

(ii) Negative results indicate that under the test conditions the test substance is not mutagenic in *D. melanogaster.*

(5) *Test report.* In addition to the reporting recommendations as specified under 40 CFR part 792, subpart J the following specific information shall be reported.

(i) *Drosophila* stock used in the assay, age of insects, number of males treated, number of sterile males, number of F_2 cultures established, number of F_2 cultures without progeny.

(ii) Test chemical vehicle, treatment and sampling schedule, exposure levels, toxicity data, negative (vehicle) and positive controls, if appropriate.

(iii) Criteria for scoring lethals.

(iv) Number of chromosomes tested, number of chromosomes scored, number of chromosomes carrying a lethal mutation.

(v) Historical control data, if available.

(vi) Dose-response relationship, if applicable.

(g) *References.* For additional background information on this test guideline the following references should be consulted:

(1) Sobels, F.H., Vogel, E. ''The capacity of *Drosophila* for detecting relevant genetic damage,'' *Mutation Research* 41:95–106 (1976).

(2) Wurgler F.E., Sobels F.H., Vogel E. ''*Drosophila* as assay system for detecting genetic changes,'' *Handbook of mutagenicity test procedures.* Eds. Kilbey, B.J., Legator, M., Nichols, W., Ramel, C., (Amsterdam: Elsevier/North Holland Biomedical Press, 1977) pp. 335–373.

[50 FR 39397, Sept. 27, 1985, as amended at 52 FR 19079, May 20, 1987]

§ 798.5300 Detection of gene mutations in somatic cells in culture.

(a) *Purpose.* Mammalian cell culture systems may be used to detect mutations induced by chemical substances. Widely used cell lines include L5178Y mouse lymphoma cells and the CHO and V–79 lines of Chinese hamster cells. In these cell lines the most commonly used systems measure mutation at the thymidine kinase (TK), hypoxanthine-guanine-phosphoribosyl transferase (HPRT) and Na^+/K^+ ATPase loci. The TK and HPRT mutational systems detect base pair mutations, frameshift mutations, and small deletions; the Na^+/K^+ ATPase system detects base pair mutations only.

(b) *Definitions.* (1) A forward mutation assay detects a gene mutation from the parental type to the mutant form which gives rise to a change in an enzymatic or functional protein.

(2) Base pair mutagens are agents which cause a base change in the DNA.

(3) Frameshift mutagens are agents which cause the addition or deletion of single or multiple base pairs in the DNA molecule.

(4) Phenotypic expression time is a period during which unaltered gene products are depleted from newly mutated cells.

(c) *Reference substances.* These may include, but need not be limited to, ethyl methanesulfonate, N-nitroso-dimethylamine, 2-acetylaminofluorene, 7,12-dimethylbenzanthracene or hycanthone.

(d) *Test method*—(1) *Principle.* Cells are exposed to test substance, both with and without metabolic activation, for a suitable period of time and subcultured to determine cytotoxicity and to allow phenotypic expression prior to mutant selection. Cells deficient in thymidine kinase (TK) due to the forward mutation $TK^+ \rightarrow TK^-$ are resistant to the cytotoxic effects of pyrimidine analogues such as bromodeoxyuridine (BrdU), fluorodeoxyuridine (FdU) or

trifluorothymidine (TFT). The deficiency of the ''salvage'' enzyme thymidine kinase means that these antimetabolites are not incorporated into cellular nucleotides and the nucleotides needed for cellular metabolism are obtained solely from *de novo* synthesis. However, in the presence of thymidine kinase, BrdU, FdU or TFT are incorporated into the nucleotides, resulting in inhibition of cellular metabolism and cytotoxicity. Thus mutant cells are able to proliferate in the presence of BrdU, FdU or TFT whereas normal cells, which contain thymidine kinase, are not. Similarly cells deficient in HPRT are selected by resistance to 8-azaguanine (AG) or 6-thioguanine (TG) and cells with altered $Na^{=}/K^{=}$ ATPase are selected by resistance to ouabain.

(2) *Description.* Cells in suspension or monolayer culture are exposed to the test substance, both with and without metabolic activation, for a defined period of time. Cytotoxicity is determined by measuring the colony forming ability or growth rate of the cultures after the treatment period. The treated cultures are maintained in growth medium for a sufficient period of time—characteristic of each selected locus—to allow near-optimal phenotypic expression of induced mutations. Mutant frequency is determined by seeding known numbers of cells in medium containing the selective agent to detect mutant cells, and in medium without selective agent to determine the cloning efficiency. After a suitable incubation time, cell colonies are counted. The number of mutant colonies in selective medium is adjusted by the number of colonies in nonselective medium to derive the mutant frequency.

(3) *Cells*—(i) *Type of cells used in the assay.* A variety of cell lines are available for use in this assay including subclones of L5178Y, CHO cells or V–79 cells. Cell types used in this assay should have a demonstrated sensitivity to chemical mutagens, a high cloning efficiency and a low spontaneous mutation frequency. Cells should be checked for *Mycoplasma* contamination and may be periodically checked for karyotype stability.

(ii) *Cell growth and maintenance.* Appropriate culture media and incubation conditions (culture vessels, CO_2 concentrations, temperature and humidity) shall be used.

(4) *Metabolic activation.* Cells shall be exposed to test substance both in the presence and absence of an appropriate metabolic activation system.

(5) *Control groups.* Positive and negative (untreated and/or vehicle) controls shall be included in each experiment. When metabolic activation is used, the positive control substance shall be known to require such activation.

(6) *Test chemicals*—(i) *Vehicle.* Test substances may be prepared in culture media or dissolved or suspended in appropriate vehicles prior to treatment of the cells. The final concentration of the vehicle shall not interfere with cell viability or growth rate. Treatment vessels should be chosen to ensure that there is no visible interaction, such as etching, between the solvent, the test chemical, and the vessel.

(ii) *Exposure concentrations.* (A) The test should be designed to have a predetermined sensitivity and power. The number of cells, cultures, and concentrations of test substance used should reflect these defined parameters. The number of cells per culture is based on the expected background mutant frequency; a general guide is to use a number which is 10 times the inverse of this frequency.

(B) Several concentrations (usually at least 4) of the test substance shall be used. Generally, these shall yield a concentration-related toxic effect. The highest concentration shall produce a low level of survival (approximately 10 percent), and the survival in the lowest concentration shall approximate the negative control. Cytotoxicity shall be determined after treatment with the test substance both in the presence and in the absence of an exogenous metabolic activation system. Relatively insoluble substances should be tested up to their limit of solubility under culture conditions. For freely-soluble nontoxic substances the highest concentration used should be determined on a case-by-case basis.

(e) *Test performance.* (1) Cells shall be exposed to the test substance both with

and without exogenous metabolic activation. Exposure shall be for a suitable period of time, in most cases 1 to 5 hours is effective; exposure time may be extended over one or more cell cycles.

(2) At the end of the exposure period, cells shall be washed and cultured to determine viability and to allow for expression of the mutant phenotype.

(3) At the end of the expression period, which shall be sufficient to allow near optimal phenotypic expression of induced mutants, cells should be grown in medium with and without selective agent(s) for determination of number of mutants and cloning efficiency, respectively.

(4) Results shall be confirmed in an independent experiment. When appropriate, a single positive response should be confirmed by testing over a narrow range of concentrations.

(f) *Data and report*—(1) *Treatment of results.* Data shall be presented in tabular form. Individual colony counts for the treated and control groups shall be presented for both mutation induction and survival. Survival and cloning efficiencies shall be given as a percentage of the controls. Mutant frequency shall be expressed as number of mutants per number of surviving cells.

(2) *Statistical evaluation.* Data should be evaluated by appropriate statistical methods.

(3) *Interpretation of results.* (i) There are several criteria for determining a positive result, one of which is a statistically significant concentration-related increase in the mutant frequency. Another criterion may be based upon detection of a reproducible and statistically significant positive response for at least one of the test substance concentrations.

(ii) A test substance which does not produce either a statistically significant concentration-related increase in the mutant frequency or a statistically significant and reproducible positive response at any one of the test points is considered nonmutagenic in this system.

(iii) Both biological and statistical significance should be considered together in the evaluation.

(4) *Test evaluation.* (i) Positive results for an in vitro mammalian cell gene mutation test indicate that, under the test conditions, a substance induces gene mutations in the cultured mammalian cells used.

(ii) Negative results indicate that, under the test conditions, the test substance does not induce gene mutations in the cultured mammalian cells used.

(5) *Test report.* In addition to the reporting recommendations as specified under 40 CFR part 792, subpart J the following specific information shall be reported:

(i) Cell type used, number of cell cultures, methods used for maintenance of cell cultures.

(ii) Rationale for selection of concentrations and number of cultures.

(iii) Test conditions: composition of media, CO_2 concentration, concentration of test substance, vehicle, incubation temperature, incubation time, duration of treatment, cell density during treatment, type of metabolic activation system, positive and negative controls, length of expression period (including number of cells seeded and subculture and feeding schedules, if appropriate), selective agent(s).

(iv) Methods used to enumerate numbers of viable and mutant cells.

(v) Dose-response relationship, where possible.

(g) *References.* For additional background information on this test guideline the following references should be consulted:

(1) Amacher, D.E., Paillet, S.C., Ray, V. ''Point mutations at the thymidine kinase locus in L5178Y mouse lymphoma cells. I. Application to genetic toxicology testing,'' *Mutation Research,* 64:391–406 (1979).

(2) Amacher, D.E., Paillet, S.C., Turner, G.N., Ray, V.A. Salsburg, V.A. ''Point mutations at the thymidine kinase locus in L5178Y mouse lymphoma cells. II. Test validation and interpretation,'' *Mutation Research,* 72:447–474 (1980).

(3) Bradley, M.O., Bhuyan B., Francis, M.C., Langenback, R., Peterson, A., Huberman, E. ''Mutagenesis by chemical agents in V–79 Chinese hamster cells: a review and analysis of the literature: a report of the Gene-Tox Program,'' *Mutation Research,* 87:81–142 (1981).

(4) Clive, D., Johnson, K.O., Spector, J.F.S., Batson, A.G., Brown, M.M. ''Validation and characterization of the L5178Y TK$^{+/-}$ mouse lymphoma mutagen assay system,'' *Mutation Research,* 59:61–108 (1979).

(5) Clive, D., Spector, J.F.S. ''Laboratory procedures for assessing specific locus mutations at the TK locus in cultured L5178Y mouse lymphoma cells,'' *Mutation Research,* 31:17–29 (1975).

(6) Hsie, A.W., Casciano, D.A., Couch, D.B., Krahn, D.F., O'Neill, J.P., Whitfield, B.L. ''The use of Chinese hamster ovary cells to quantify specific locus mutation and to determine mutagenicity of chemicals: a report of the U.S. EPA's Gene-Tox Program,'' *Mutation Research,* 86:193–214 (1981).

[50 FR 39397, Sept. 27, 1985, as amended at 52 FR 19079, May 20, 1987]

§ 798.5375 In vitro mammalian cytogenetics.

(a) *Purpose.* The in vitro cytogenetics test is a mutagenicity test system for the detection of chromosomal aberrations in cultured mammalian cells. Chromosomal aberrations may be either structural or numerical. However, because cytogenetic assays are usually designed to analyse cells at their first post-treatment mitosis and numerical aberrations require at least one cell division to be visualized, this type of aberration is generally not observed in a routine cytogenetics assay. Structural aberrations may be of two types, chromosome or chromatid.

(b) *Definitions.* (1) Chromosome-type aberrations are changes which result from damage expressed in both sister chromatids at the same time.

(2) Chromatid-type aberrations are damage expressed as breakage of single chromatids or breakage and/or reunion between chromatids.

(c) *Reference substances.* Not applicable.

(d) *Test method*—(1) *Principle.* In vitro cytogenetics assays may employ cultures of established cell lines, cell strains or primary cell cultures. Cell cultures are exposed to the test substance both with and without metabolic activation. Following exposure of cell cultures to test substances, they are treated with a spindle inhibitor (e.g., colchicine or Colcemid#) to arrest cells in a metaphase-like stage of mitosis (c-metaphase). Cells are then harvested and chromosome preparations made. Preparations are stained and metaphase cells are analyzed for chromosomal aberrations.

(2) *Description.* Cell cultures are exposed to test compounds and harvested at various intervals after treatment. Prior to harvesting, cells are treated with a spindle inhibitor (e.g., colchicine or Colcemid#) to accumulate cells in c-metaphase. Chromosome preparations from cells are made, stained and scored for chromosomal aberrations.

(3) *Cells*—(i) *Type of cells used in the assay.* There are a variety of cell lines or primary cell cultures, including human cells, which may be used in the assay. Established cell lines and strains should be checked for *Mycoplasma* contamination and may be periodically checked for karyotype stability.

(ii) *Cell growth and maintenance.* Appropriate culture media, and incubation conditions (culture vessels CO_2 concentrations, temperature and humidity) shall be used.

(4) *Metabolic activation.* Cells shall be exposed to test substance both in the presence and absence of an appropriate metabolic activation system.

(5) *Control groups.* Positive and negative (untreated and/or vehicle) controls both with and without metabolic activation shall be included in each experiment. When metabolic activation is used, the positive control substance shall be known to require such activation.

(6) *Test chemicals*—(i) *Vehicle.* Test substances may be prepared in culture media or dissolved or suspended in appropriate vehicles prior to treatment of the cells. Final concentration of the vehicle shall not interfere with cell viability or growth rate. Treatment vessels should be chosen to ensure that there is no visible interaction, such as etching, between the solvent, the test chemical, and the vessel.

(ii) *Exposure concentrations.* Multiple concentrations of the test substance over a range adequate to define the response should be tested. Generally the highest test substance concentrations

tested with and without metabolic activation should show evidence of cytotoxicity or reduced mitotic activity. Relatively insoluble substances should be tested up to the limit of solubility. For freely soluble nontoxic chemicals, the upper test chemical concentration should be determined on a case by case basis.

(e) *Test performance*—(1) *Established cell lines and strains.* Prior to use in the assay, cells should be generated from stock cultures, seeded in culture vessels at the appropriate density and incubated at 37 °C.

(2) *Human lymphocyte cultures.* Heparinized or acid-citrate-dextrose whole blood should be added to culture medium containing a mitogen, e.g., phytohemagglutinin (PHA) and incubated at 37 °C. White cells sedimented by gravity (buffy coat) or lymphocytes which have been purified on a density gradient may also be utilized.

(3) *Treatment with test substance.* For established cell lines and strains, cells in the exponential phase of growth shall be treated with test substances in the presence and absence of an exogenous metabolic activation system. Mitogen-stimulated human lymphocyte cultures may be treated with the test substance in a similar manner.

(4) *Number of cultures.* At least two independent cultures shall be used for each experimental point.

(5) *Culture harvest time.* (i) For established cell lines and strains, multiple harvest times are recommended. However, for screening purposes, a single harvest time may be appropriate. If the test chemical changes the cell cycle length, the fixation intervals should be changed accordingly. If a single harvest time is selected, supporting data for the harvest time should be presented in such a study.

(ii) For human lymphocyte cultures, the substance to be tested may be added to the cultures at various times after mitogen stimulation so that there is a single harvest time after the initiation of the cell culture. Alternatively, a single treatment may be followed by multiple harvest times. Harvest time should be extended for those chemicals which induce an apparent cell cycle delay. Because the population of human lymphocytes is only partially synchronized, a single treatment, at, or close to, the time when metaphase stages first appear in the culture will include cells in all phases of the division cycle. Therefore, a single harvest at the time of second mitosis may be carried out for screening purposes.

(iii) Cell cultures shall be treated with a spindle inhibitor, (e.g., colchicine or Colcemid®), 1 or 2 hours prior to harvesting. Each culture shall be harvested and processed separately for the preparation of chromosomes.

(6) *Chromosome preparation.* Chromosome preparation involves hypotonic treatment of the cells, fixation and staining.

(7) *Analysis.* Slides shall be coded before analysis. In human lymphocytes, only cells containing 46 centromeres shall be analyzed. In established cell lines and strains, only metaphases containing ±2 centromeres of the modal number shall be analyzed. Uniform criteria for scoring aberrations shall be used.

(8) *Confirmatory tests.* When appropriate, a single positive response shall be confirmed by testing over a narrow range of concentrations.

(f) *Data and report*—(1) *Treatment of results.* Data shall be presented in a tabular form. Different types of structural chromosomal aberrations shall be listed with their numbers and frequencies for experimental and control groups. Data should be evaluated by appropriate statistical methods. Gaps or achromatic lesions are recorded separately and not included in the total aberration frequency.

(2) *Statistical evaluation.* Data should be evaluated by appropriate statistical methods.

(3) *Interpretation of results.* (i) There are several criteria for determining a positive result, one of which is a statistically significant dose-related increase in the number of structural chromosomal aberrations. Another criterion may be based upon detection of a reproducible and statistically significant positive response for at least one of the test substance concentrations.

(ii) A test substance which does not produce either a statistically significant dose-related increase in the number of structural chromosomal aberrations or a statistically significant and reproducible positive response at any one of the test points is considered nonmutagenic in this system.

(iii) Both biological and statistical significance should be considered together in the evaluation.

(4) *Test evaluation.* (i) Positive results in the in vitro cytogenetics assay indicate that under the test conditions the test substance induces chromosomal aberrations in cultured mammalian somatic cells.

(ii) Negative results indicate that under the test conditions the test substance does not induce chromosomal aberrations in cultured mammalian somatic cells.

(5) *Test report.* In addition to the reporting recommendations as specified under 40 CFR part 792, subpart J the following specific information shall be reported:

(i) Cells used, density and passage number at time of treatment, number of cell cultures.

(ii) Methods used for maintenance of cell cultures including medium, temperature and CO_2 concentration.

(iii) Test chemical vehicle, concentration and rationale for the selection of the concentrations used in the assay, duration of treatment.

(iv) Details of both the protocol used to prepare the metabolic activation system and of its use in the assay.

(v) Identity of spindle inhibitor, its concentration and duration of treatment.

(vi) Date of cell harvest.

(vii) Positive and negative controls.

(viii) Methods used for preparation of slides for microscopic examination.

(ix) Number of metaphases analysed.

(x) Mitotic index where applicable.

(xi) Criteria for scoring aberrations.

(xii) Type and number of aberrations, given separately for each treated and control culture, total number of aberrations per group; frequency distribution of number of chromosomes in established cell lines and strains.

(xiii) Dose-response relationship, if applicable.

(g) *References.* For additional background information on this test guideline the following references should be consulted.

(1) Ames, B.N., McCann, J., Yamasaki, E. ''Methods for detecting carcinogens and mutagens with the *Salmonella/* mammalian-microsome mutagenicity test,'' *Mutation Research,* 31:347–364 (1975).

(2) Evans, H.J. ''Cytological methods for detecting chemical mutagens,'' *Chemical mutagens, principles and methods for their detection,* Vol. 4, Ed. A. Hollaender (New York, London: Plenum Press, 1976) pp. 1–29.

(3) Howard, P.N., Bloom, A.D., Krooth, R.S. ''Chromosomal aberrations induced by N-methyl-N′-nitro-N-nitrosoguanidine in mammalian cells,'' *In Vitro* 7:359–365 (1972).

(4) Ishidate, M. Jr., Odashima, S. ''Chromosome tests with 134 compounds on Chinese hamster cells in vitro: A screening for chemical carcinogens,'' *Mutation Research,* 48:337–354 (1975).

(5) Preston, R.J., Au, W., Bender, M.A., Brewen, J.G., Carrano, A.V., Heddle, J.A., McFee, A.F., Wolff, S., Wassom, J.S., ''Mammalian in vivo and in vitro cytogenetic assays: A report of the Gene-tox Program,'' *Mutation Research,* 87:143–188 (1981).

[50 FR 39397, Sept. 27, 1985, as amended at 52 FR 19079, May 20, 1987]

§ 798.5385 In vivo mammalian bone marrow cytogenetics tests: Chromosomal analysis.

(a) *Purpose.* The *in vivo* bone marrow cytogenetic test is a mutagenicity test for the detection of structural chromosomal aberrations. Chromosomal aberrations are generally evaluated in first post-treatment mitoses. With the majority of chemical mutagens, induced aberrations are of the chromatid type but chromosome type aberrations also occur.

(b) *Definitions.* (1) Chromosome-type aberrations are changes which result from damage expressed in both sister chromatids at the same time.

(2) Chromatid-type aberrations are damage expressed as breakage of single chromatids or breakage and/or reunion between chromatids.

(c) *Reference substances.* Not applicable.

(d) *Test method*—(1) *Principle.* Animals are exposed to test chemicals by appropriate routes and are sacrificed at sequential intervals. Chromosome preparations are made from bone marrow cells. The stained preparations are examined and metaphase cells are scored for chromosomal aberrations.

(2) *Description.* The method employs bone marrow of laboratory rodents which have been exposed to test chemicals. Prior to sacrifice, animals are further treated with a spindle inhibitor, (e.g., colchicine or Colcemid®) to arrest the cells in c-metaphase. Chromosome preparations from the cells are stained and scored for chromosomal aberrations.

(3) *Animal selection*—(i) *Species and strain.* Any appropriate mammalian species may be used. Examples of commonly used rodent species are rats, mice, and hamsters.

(ii) *Age.* Healthy young adult animals shall be used.

(iii) *Number and sex.* At least five female and five male animals per experimental and control group shall be used. Thus, 10 animals would be sacrificed per time per group treated with the test compound if several test times after treatment are included in the experimental schedule. The use of a single sex or smaller number of animals should be justified.

(iv) *Assignment to groups.* Animals shall be randomized and assigned to treatment and control groups.

(4) *Control groups*—(1) *Concurrent controls.* (i) Concurrent positive and negative (vehicle) controls shall be included in the assay.

(ii) *Positive controls.* A single dose positive control showing a significant response at any one time point is adequate. A compound known to produce chromosomal aberrations in vivo shall be employed as the positive control.

(5) *Test chemicals*—(i) *Vehicle.* When possible, test chemicals shall be dissolved in isotonic saline or distilled water. Water insoluble chemicals may be dissolved or suspended in appropriate vehicles. The vehicles used shall neither interfere with the test chemical nor produce toxic effects. Fresh preparations of the test compound should be employed.

(ii) *Dose levels.* For an initial assessment, one dose of the test substance may be used, the dose being the maximum tolerated dose (to a maximum of 5,000 mg/kg) or that producing some indication of cytotoxicity (e.g., partial inhibition of mitosis) or shall be the highest dose attainable (to a maximum of 5,000 mg/kg). Additional dose levels may be used. For determination of dose-response, at least three dose levels should be used.

(iii) *Route of administration.* The usual routes are oral or by intraperitoneal injection. Other routes may be appropriate.

(iv) *Treatment schedule.* In general, test substances should be administered once only. However, based on toxicological information a repeated treatment schedule may be employed.

(e) *Test performance*—(1) *Generally the test may be performed in two assays.* (i) Animals should be treated with the test substance once at the selected dose(s). Samples should be taken at three times after treatment. For rodents, the central sampling interval is 24 hours. Since cell cycle kinetics can be influenced by the test substance, one earlier and one later sampling interval adequately spaced within the range of 6 to 48 hours shall be applied. Where the additional dose levels are tested in a subsequent experiment, samples shall be taken at the predetermined most sensitive interval or, if this is not established, at the central sampling time. If the most sensitive interval is known and documented with data, only this one time point shall be sampled.

(ii) If a repeated treatment schedule is used at the selected dose(s), samples shall be taken 6 and 24 hours after the last treatment; other sampling times may be used if justified. Where the additional dose levels are tested in a subsequent experiment, samples shall be taken at the predetermined most sensitive interval or, if this is not established, at 6 hours after the last treatment.

(2) *Administration of spindle inhibitor.* Prior to sacrifice, animals shall be injected IP with an appropriate dose of a spindle inhibitor (e.g., colchicine or

Colcemid®) to arrest cells in c-metaphase.

(3) *Preparation of slides.* Immediately after sacrifice, the bone marrow shall be obtained, exposed to hypotonic solution, and fixed. The cells shall then be spread on slides and stained. Chromosome preparations shall be made following standard procedures.

(4) *Analysis.* The number of cells to be analyzed per animal should be based upon the number of animals used, the negative control frequency, the predetermined sensitivity, and the power chosen for the test. Slides shall be coded before microscopic analysis.

(f) *Data and report*—(1) *Treatment of results.* Data should be presented in tabular form for both cells and animals. Different types of structural chromosomal aberrations should be listed with their numbers and a mean frequency per cell for each animal in all treated and control groups. Gaps (achromatic lesions) should be recorded separately and not included in the total abberration frequency. Differences among animals within each group should be considered before making comparisons between treated and control groups.

(2) *Statistical evaluation.* Data should be evaluated by appropriate statistical methods.

(3) *Interpretation of results.* (i) There are several criteria for determining a positive result, one of which is a statistically significant dose-related increase in the number of structual chromosomal aberrations or abnormal metaphase figures. Another criterion may be based upon detection of a reproducible and statistically significant positive response for a least one of the test points.

(ii) A test substance which does not produce either a statistically significant dose-related increase in the number of chromosomal aberrations or abnormal metaphase figures or a statistically significant and reproducible positive response at any one of the test points is considered nonmutagenic in this system.

(iii) Both biological and statistical significance should be considered together in the evaluation.

(4) *Test evaluation.* (i) Positive results in the *in vivo* bone marrow cytogenetics assay indicate that under the test conditions the test substance induces chromosomal aberrations in the bone marrow of the test species.

(ii) Negative results indicate that under the test conditions, the test substance does not induce chromosomal aberrations in the bone marrow of the test species.

(5) *Test report.* In addition to the reporting recommendations as specified under 40 CFR part 792, subpart J the following specific information shall be reported:

(i) Species, strain, age, weight, number and sex of animals in each treatment and control group.

(ii) Test chemical vehicle, dose levels used, rationale for dose selection.

(iii) Route of administration, treatment and sampling schedules, toxicity data, negative and positive controls.

(iv) Identity of spindle-inhibitor, its concentration and duration of treatment.

(v) Details of the protocol used for chromosome preparation, number of cells scored per animal, type and number of aberrations given separately for each treated and control animal.

(vi) Mitotic index, where applicable.

(vii) Criteria for scoring aberrations.

(viii) Number and frequency of aberrant cells per animal in each treatment and control groups.

(ix) Total number of aberrations per group.

(x) Number of cells with aberrations per group.

(xi) Dose-response relationship, if applicable.

(g) *References.* For additional background information on this test guideline the following references should be consulted:

(1) Adler, I.D., Ramarao, G., Epstein, S.S. ''In vivo cytogenetic effects of trimethyl-phosphate and of TEPA on bone marrow cells of male rats,'' *Mutation Research,* 13:263–273 (1971).

(2) Evans, H.J. ''Cytological methods for detecting chemical mutagens,'' *Chemical Mutagens: Principles and Methods for Their Detection,* Vol. 4. Ed. A. Hollaender (New York and London: Plenum Press, 1976) pp. 1–29.

(3) Kilian, J.D., Moreland, F.E. Benge, M.C., Legator, M.S., Whorton, E.B. Jr. ''A collaborative study to

measure intralaboratory variation with the in vivo bone morrow metaphase procedure,'' *Handbook of mutagenicity test procedures.* Eds. Kilby, B.J., Legator, M. Nichols, C., Ramel, D., (Amsterdam: Elsevier/North Holland Biomedical Press, 1977) 243–260.

(4) Preston, J.R., Au, W., Bender, M.A., Brewen, J.G., Carrano, A.V. Heddle, J.A., McFee, A.F., Wolff, S., Wassom, J. ''Mammalian in vivo and vitro cytogenetics assays: Report of the Gene-Tox Program,'' *Mutation Research, 87:143–188 (1981).*

[50 FR 39397, Sept. 27, 1985, as amended at 52 FR 19080, May 20, 1987]

§ 798.5395 In vivo mammalian bone marrow cytogenetics tests: Micronucleus assay.

(a) *Purpose.* The micronucleus test is a mammalian *in vivo* test which detects damage of the chromosomes or mitotic apparatus by chemicals. Polychromatic erythrocytes in the bone marrow of rodents are used in this assay. When the erythroblast develops into an erythrocyte the main nucleus is extruded and may leave a micronucleus in the cytoplasm. The visualization of micronuclei is facilitated in these cells because they lack a nucleus. Micronuclei form under normal conditions. The assay is based on an increase in the frequency of micronucleated polychromatic erythrocytes in bone marrow of treated animals.

(b) *Definition.* Micronuclei are small particles consisting of acentric fragments of chromosomes or entire chromosomes, which lag behind at anaphase of cell division. After telophase, these fragments may not be included in the nuclei of daughter cells and form single or multiple micronuclei in the cytoplasm.

(c) *Reference substances.* Not applicable.

(d) *Test method*—(1) *Principle.* (i) Animals are exposed to test substance by an appropriate route. They are sacrificed, the bone marrow extracted and smear preparations made and stained. Polychromatic erythrocytes are scored for micronuclei under the microscope.

(ii) Micronuclei may also be detected in other test systems:

(A) Tissue culture.

(B) Plants.

(C) Blood smears.

(D) Fetal tissues.

(E) Meiotic cells.

(F) Hepatic cells.

(iii) The present guideline is based on the mammalian bone marrow assay.

(2) *Description.* The method employs bone marrow of laboratory mammals which are exposed to test substances.

(3) *Animal selection*—(i) *Species and strain.* Mice are recommended. However, any appropriate mammalian species may be used.

(ii) *Age.* Young adult animals shall be used.

(iii) *Number and sex.* At least five female and five male animals per experimental and control group shall be used. Thus, 10 animals would be sacrificed per time per group if several test times after treatment were included in the experimental schedule. The use of a single sex or a smaller number of animals should be justified.

(iv) *Assignment to groups.* Animals shall be randomized and assigned to treatment and control groups.

(4) *Control groups*—(i) *Concurrent controls.* Concurrent positive and negative (vehicle) controls shall be included in each assay.

(ii) *Positive controls.* A compound known to produce micronuclei *in vivo* shall be employed as the positive control.

(5) *Test chemicals*—(i) *Vehicle.* When appropriate for the route of administration, solid and liquid test substances should be dissolved or suspended in distilled water or isotonic saline. Water insoluble chemicals may be dissolved or suspended in appropriate vehicles. The vehicle used shall neither interfere with the test compound nor produce toxic effects. Fresh preparations of the test compound should be employed.

(ii) *Dose levels.* For an initial assessment, one dose of the test substance may be used, the dose being the maximum tolerated dose (to a maximum of 5,000 mg/kg) or that producing some indication of cytotoxicity, e.g., a change in the ratio of polychromatic to normochromatic erythrocytes. Additional dose levels may be used. For determination of dose response, at least three dose levels shall be used.

(iii) *Route of administration.* The usual routes of administration are IP or oral. Other routes may be appropriate.

(iv) *Treatment schedule.* Test substances should generally be administered only once. However, based upon toxicological information a repeated treatment schedule may be employed.

(e) *Test performance*—(1) *Treatment and sampling times.* (i) Animals shall be treated with the test substance once at the highest tolerated dose. Sampling times should coincide with the maximum responses of the assay which varies with the test substance. Therefore, using the highest dose, bone marrow samples should be taken at least three times, starting not earlier than 12 hours after treatment, with appropriate intervals following the first sample but not extending beyond 72 hours. When other doses are used sampling shall be at the maximum sensitive period, or, if that is not known, approximately 24 hours after treatment. Other appropriate sampling times may be used in addition. If the most sensitive interval is known and documented with data, only this one time point need be sampled.

(ii) If a repeated treatment schedule is used, samples shall be taken at least three times, starting not earlier than 12 hours after the last treatment and at appropriate intervals following the first sample, but not extending beyond 72 hours.

(iii) Bone marrow shall be obtained immediately after sacrifice. Cells shall be prepared, put on slides, spread as a smear and stained.

(2) *Analysis.* Slides shall be coded before microscopic analysis. At least 1,000 polychromatic erythrocytes per animal shall be scored for the incidence of micronuclei. The ratio of polychromatic to normochromatic erythrocytes should be determined for each animal by counting a total of 200 erythrocytes. To ensure consistency with OECD and other guidelines, 1,000 polychromatic erythrocytes are recommended. Additional information may be obtained by scoring normochromatic erythrocytes for micronuclei.

(f) *Data and report*—(1) *Treatment of results.* Criteria for scoring micronuclei shall be given. Individual data shall be presented in a tabular form including positive and negative (vehicle) controls and experimental groups. The number of polychromatic erythrocytes scored, the number of micronucleated polychromatic erythrocytes, the percentage of micronucleated cells, the number of micronucleated normochromatic erythrocytes, and, if applicable, the percentage of micronucleated erythrocytes and the ratio of normochromatic to polychromatic erythrocytes shall be listed separately for each experimental and control animal. Absolute numbers shall be included if percentages are reported.

(2) *Statistical evaluation.* Data should be evaluated by appropriate statistical methods.

(3) *Interpretation of results.* (i) There are several criteria for determining a positive response, one of which is a statistically significant dose-related increase in the number of micronucleated polychromatic erythrocytes. Another criterion may be based upon detection of a reproducible and statistically significant positive response for at least one of the test substance concentrations.

(ii) A test substance which does not produce either a statistically significant dose-related increase in the number of micronucleated polychromatic erythrocytes or a statistically significant and reproducible positive response at any one of the test points is considered nonmutagenic in this system.

(iii) Both biological and statistical significance should be considered together in the evaluation.

(4) *Test evaluation.* (i) The results of the micronucleus test provide information on the ability of a chemical to induce micronuclei in polychromatic erythrocytes of the test species under the conditions of the test. This damage may have been the result of chromosomal damage or damage to the mitotic apparatus.

(ii) Negative results indicate that under the test conditions the test substance does not produce micronuclei in the bone marrow of the test species.

(5) *Test report.* In addition to the reporting recommendations as specified under 40 CFR part 792, subpart J, the following specific information shall be reported:

(i) Species, strain, age, weight, number and sex of animals in each treatment and control group.

(ii) Test chemical vehicle, dose levels used, rationale for dose selection.

(iii) Rationale for and description of treatment and sampling schedules, toxicity data, negative and positive controls.

(iv) Details of the protocol used for slide preparation.

(v) Criteria for identifying micronucleated erythrocytes.

(vi) Dose-response relationship, if applicable.

(g) *References.* For additional background information on this test guideline the following references should be consulted:

(1) Cihak, R. ''Evaluation of benzidine by the micronucleus test,'' *Mutation Research,* 67: 383–384 (1979).

(2) Cole, R.J., Taylor, N., Cole, J., Arlett, C.F. ''Short-term tests for transplacentally active carcinogens. 1. Micronucleus formation in fetal and maternal mouse erythroblasts,'' *Mutation Research,* 80: 141–157 (1981).

(3) Kliesch, U., Danford, N., Adler, I.D. ''Micronucleus test and bone-marrow chromosome analysis. A comparison of 2 methods in vivo for evaluating chemically induced chromosomal alterations,'' *Mutation Research,* 80: 321–332 (1981).

(4) Matter, B., Schmid, W. ''Trenimon-induced chromosomal damage in bone-marrow cells of six mammalian species, evaluated by the micronucleus test,'' *Mutation Research,* 12: 417–425 (1971).

(5) Schmid, W. ''The micronucleus test,'' *Mutation Research, 31:9–15 (1975).*

(6) Schmid, W. ''The micronucleus test for cytogenetic analysis,'' *Chemical Mutagens, Principles and Methods for their Detection.* Vol. 4 Hollaender A, (Ed. A ed. (New York and London: Plenum Press, (1976) pp. 31–53.

(7) Heddle, J.A., Hite, M., Kurkhart, B., Mavournin, K., MacGregor, J.T., Newell, G.W., Salamone, M.F. ''The induction of micronuclei as a measure of genotoxicity. A report of the U.S. Environmental Protection Agency Gene-Tox Program,'' *Mutation Research,* 123: 61–118 (1983).

[50 FR 39397, Sept. 27, 1985, as amended at 52 FR 19080, May 20, 1987; 52 FR 26150, July 13, 1987; 52 FR 34654, Sept. 14, 1987]

§ 798.5450 Rodent dominant lethal assay.

(a) *Purpose.* Dominant lethal (DL) effects cause embryonic or fetal death. Induction of a dominant lethal event after exposure to a chemical substance indicates that the substance has affected germinal tissue of the test species. Dominant lethals are generally accepted to be the result of chromosomal damage (structural and numerical anomalies) but gene mutations and toxic effects cannot be excluded.

(b) *Definition.* A dominant lethal mutation is one occurring in a germ cell which does not cause dysfunction of the gamete, but which is lethal to the fertilized egg or developing embryo.

(c) *Reference substances.* These may include, but need not be limited to, triethylenemelamine, cyclophosphamide or ethyl methanesulfonate.

(d) *Test method*—(1) *Principle.* Generally, male animals are exposed to the test substance and mated to untreated virgin females. The various germ cell stages can be tested separately by the use of sequential mating intervals. The females are sacrificed after an appropriate period of time and the contents of the uteri are examined to determine the numbers of implants and live and dead embryos. The calculation of the dominant lethal effect is based on comparison of the live implants per female in the treated group to the live implants per female in the control group. The increase of dead implants per female in the treated group over the dead implants per female in the control group reflects the post-implantation loss. The post-implantation loss is calculated by determining the ratio of dead to total implants from the treated group compared to the ratio of dead to total implants from the control group. Pre-implantation loss can be estimated on the basis of corpora lutea counts or by comparing the total implants per female in treated and control groups.

(2) *Description.* (i) Several treatment schedules are available. The most widely used requires single administration of the test substance. Other treatment schedules, such as treatment on five consecutive days, may be used if justified by the investigator.

(ii) Individual males are mated sequentially to virgin females at appropriate intervals. The number of matings following treatment is governed by the treatment schedule and should ensure that germ cell maturation is adequately covered. Females are sacrificed in the second half of pregnancy and the uterine contents examined to determine the total number of implants and the number of live and dead embryos.

(3) *Animal selection*—(i) *Species.* Rats or mice are generally used as the test species. Strains with low background dominant lethality, high pregnancy frequency and high implant numbers are recommended.

(ii) *Age.* Healthy, sexually mature animals shall be used.

(iii) *Number.* An adequate number of animals shall be used taking into account the spontaneous variation of the biological characteristics being evaluated. The number chosen should be based on the predetermined sensitivity of detection and power of significance. For example, in a typical experiment, the number of males in each group shall be sufficient to provide between 30 and 50 pregnant females per mating interval.

(iv) *Assignment to groups.* Animals shall be randomized and assigned to treatment and control groups.

(4) *Control groups*—(i) *Concurrent controls.* Generally concurrent positive and negative (vehicle) controls shall be included in each experiment. When acceptable positive control results are available from experiments conducted recently (within the last 12 months) in the same laboratory these results can be used instead of a concurrent positive control.

(ii) *Positive controls.* Positive control substances shall be used at a dose which demonstrates the test sensitivity.

(5) *Test chemicals*—(i) *Vehicle.* When possible, test substances shall be dissolved or suspended in isotonic saline or distilled water. Water-insoluble chemicals may be dissolved or suspended in appropriate vehicles. The vehicle used shall neither interfere with the test chemical nor produce toxic effects. Fresh preparations of the test chemical should be employed.

(ii) *Dose levels.* Normally, three dose levels shall be used. The highest dose shall produce signs of toxicity (e.g., slightly reduced fertility and slightly reduced body weight). However, in an initial assessment of dominant lethality a single high dose may be sufficient. Nontoxic substances shall be tested at 5g/kg or, if this is not practicable, then as the highest dose attainable.

(iii) *Route of administration.* The usual routes of administration are oral or by IP injection. Other routes may be appropriate.

(e) *Test performance.* (1) Individual males are mated sequentially at appropriate predetermined intervals to one or two virgin females. Females should be left with the males for at least the duration of one estrus cycle or alternatively until mating has occurred as determined by the presence of sperm in the vagina or by the presence of a vaginal plug.

(2) The number of matings following treatment should be governed by the treatment schedule and should ensure that germ cell maturation is adequately covered.

(3) Females should be sacrificed in the second half of pregnancy and uterine contents examined to determine the number of implants and live and dead embryos. The ovaries may be examined to determine the number of corpora lutea.

(f) *Data and report*—(1) *Treatment of results.* Data shall be tabulated to show the number of males, the number of pregnant females, and the number of nonpregnant females. Results of each mating, including the identity of each male and female, shall be reported individually. For each female, the dose level and week of mating and the frequencies of live implants and of dead implants shall be enumerated. If the data are recorded as early and late deaths, the tables shall make that clear. If preimplantation loss is estimated, it shall be reported.

Preimplantation loss can be calculated as the difference between the number of corpora lutea and the number of implants or as a reduction in the average number of implants per female in comparison with control matings.

(2) *Statistical evaluation.* Data shall be evaluated by appropriate statistical methods. Differences among animals within the control and treatment groups shall be considered before making comparisons between treated and control groups.

(3) *Interpretation of results.* (i) There are several criteria for determining a positive result, one of which is a statistically significant dose-related increase in the number of dominant lethals. Another criterion may be based upon detection of a reproducible and statistically significant positive response for at least one of the test points.

(ii) A test substance which does not produce either a statistically significant dose-related increase in the number of dominant lethals or a statistically significant and reproducible positive response at any one of the test points is considered nonmutagenic in this system.

(iii) Both biological and statistical significance should be considered together in the evaluation.

(4) *Test evaluation.* (i) A positive DL assay suggests that under the test conditions the test substance may be genotoxic in the germ cells of the treated sex of the test species.

(ii) A negative result suggests that under the conditions of the test the test substance may not be genotoxic in the germ cells of the treated sex of the test species.

(5) *Test report.* In addition to the reporting recommendations as specified under 40 CFR part 792, subpart J the following specific information shall be reported:

(i) Species, strain, age and weights of animals used, number of animals of each sex in experimental and control groups.

(ii) Test substance, vehicle used, dose levels and rationale for dosage selection, negative (vehicle) and positive controls, experimental observations, including signs of toxicity.

(iii) Route and duration of exposure.

(iv) Mating schedule.

(v) Methods used to determine that mating has occurred (where applicable).

(vi) Criteria for scoring dominant lethals including the number of early and late embryonic deaths.

(vii) Dose-response relationship, if applicable.

(g) *References.* For additional background information on this test guideline the following references should be consulted:

(1) Brewen, J.G., Payne, H.S., Jones, K.P., Preston, R.J. ''Studies on chemically induced dominant lethality. I. The cytogenetic basis of MMS-induced dominant lethality in post-meiotic germ cells'' *Mutation Research,* 33:239–250 (1975).

(2) Ehling, U.H., Machemer, L., Buselmaier, E., Dycka, D., Frohberg, H., Kratochvilova, J., Lang, R., Lorke, D., Muller, D., Pheh, J., Rohrborn, G., Roll, R., Schulze-Schencking, M., Wiemann, H. ''Standard protocol for the dominant lethal test on male mice. Set up by the Work Group ''Dominant lethal mutations of the ad hoc Committee Chemogenetics,'' *Archives of Toxicology,* 39:173–185 (1978).

[50 FR 39397, Sept. 27, 1985, as amended at 52 FR 19081, May 20, 1987]

§ 798.5460 Rodent heritable translocation assays.

(a) *Purpose.* This test detects transmitted chromosomal damage which manifests as balanced reciprocal translocations in progeny descended from parental males treated with chemical mutagens.

(b) *Definitions.* (1) A heritable translocation is one in which distal segments of nonhomologous chromosomes are involved in a reciprocal exchange.

(2) Diakinesis and metaphase I are stages of meiotic prophase scored cytologically for the presence of multivalent chromosome association characteristic of translocation carriers.

(c) *Reference substances.* Not applicable.

(d) *Test method*—(1) *Principle.* When a balanced reciprocal translocation is induced in a parental male germ cell, the resulting progeny is translocation heterozygote.

(i) *Basis for fertility screening.* Male translocation heterozygotes may be completely sterile. This class consists of two types of translocations:

(A) Translocations between non-homologous chromosomes in which at least one of the breaks occurs close to one end of a chromosome.

(B) Those that carry multiple translocations. The majority of male translocation heterozygotes are semisterile—they carry one or (rarely) two translocations. The degree of semisterility is dependent upon the proportions of balanced and unbalanced (duplication-deficiency) gametes produced in the ejaculate as a function of meiotic segregation. Balanced and unbalanced sperm are equally capable of fertilizing an egg. Balanced sperm lead to viable progeny. Unbalanced sperm result in early embryonic lethality.

(ii) *Basis for cytological screening.* The great majority of male translocation heterozygotes can be identified cytologically through analysis of diakinesis metaphase I spermatocytes. Translocation heterozygotes are characterized by the presence of multivalent chromosome association such as a ring or chain of four chromosomes held together by chiasmata in paired homologous regions. Some translocation carriers can be identified by the presence of extra long and/or extra short chromosomes in spermatogonial and somatic cell metaphase preparations.

(2) *Description.* Essentially, two methods have been used to screen for translocation heterozygosity; one method uses a mating sequence to identify sterile and semisterile males followed by cytological examination of suspect male individuals; the other method deletes the mating sequence altogether and all F_1 male progeny are examined cytologically for presence of translocation. In the former approach, the mating sequence serves as a screen which eliminates most fully fertile animals for cytological confirmation as translocation heterozygotes.

(3) *Animal selection*—(i) *Species.* The mouse is the species generally used, and is recommended.

(ii) *Age.* Healthy sexually mature animals shall be used.

(iii) *Number.* (A) The number of male animals necessary is determined by the following factors:

(*1*) The use of either historical or concurrent controls.

(*2*) The power of the test.

(*3*) The minimal rate of induction required.

(*4*) Whether positive controls are used.

(*5*) The level of significance desired.

(B) [Reserved]

(iv) *Assignment to groups.* Animals shall be randomized and assigned to treatment and control groups.

(4) *Control groups*—(i) *Concurrent controls.* No concurrent positive or negative (vehicle) controls are recommended as routine parts of the heritable translocation assay. However, investigators not experienced in performing translocation testing shall include a substance known to produce translocations in the assay as a positive control reference chemical.

(ii) *Historical controls.* At the present time, historical control data must be used in tests for significance. When statistically reliable historical controls are not available, negative (vehicle) controls shall be used.

(5) *Test chemicals*—(i) *Vehicle.* When appropriate for the route of administration, solid and liquid test substances should be dissolved or suspended in distilled water or isotonic saline. Water-insoluble chemicals may be dissolved or suspended in appropriate vehicles. The vehicle used shall neither interfere with the test chemical nor produce toxic effects. Fresh preparations of the test chemical should be employed.

(ii) *Dose levels.* At least two dose levels shall be used. The highest dose level shall result in toxic effects (which shall not produce an incidence of fatalities which would prevent a meaningful evaluation) or shall be the highest dose attainable or 5g/kg body weight.

(iii) *Route of administration.* Acceptable routes of administration include oral, inhalation, admixture with food or water, and IP or IV injection.

(e) *Test performance*—(1) *Treatment and mating.* The animals shall be dosed with the test substances 7 days per week over a period of 35 days. After treatment, each male shall be caged

with 2 untreated females for a period of 1 week. At the end of 1 week, females shall be separated from males and caged individually. When females give birth, the day of birth, litter size, and sex of progeny shall be recorded. All male progeny should be weaned, and all female progeny should be discarded.

(2) *Testing for translocation heterozygosity*. When males are sexually mature, testing for translocation heterozygosity shall begin. One of two methods shall be used; the first method involves mating, determining those F_1 progeny which are sterile or semisterile and subsequent cytological analysis of suspect progeny; the other method does not involve mating and determining sterility or semisterility; all progeny are examined cytologically.

(i) *Determination of sterility or semisterility*—(A) *Conventional method.* Females are mated, usually three females for each male, and each female is killed at midpregnancy. Living and dead implantations are counted. Criteria for determining normal and semisterile males are usually established for each new strain because the number of dead implantations varies considerably among strains.

(B) *Sequential method.* Males to be tested are caged individually with females and the majority of the presumably normal males are identified on the basis of a predetermined size of 1 or 2 litters. Breeding pens are examined daily on weekdays beginning 18 days after pairing. Young are discarded immediately after they are scored. Males that sire a litter whose size is the same as or greater than the minimum set for a translocation-free condition are discarded with their litter. If the litter size is smaller than the predetermined number, a second litter is produced with the same rule applying. Males that cannot be classified as normal after production of a second litter are tested further by the conventional method or by cytological confirmation of translocation.

(ii) *Cytological analysis.* For cytological analysis of suspected semisteriles, the air-drying technique is used. Observation of at least 2 diakinesis-metaphase 1 cells with mutivalent association constitutes the required evidence for the presence of a translocation. Sterile males are examined by one of two methods, those with testes of normal size and sperm in the epididymis are examined by the same techniques used for semisteriles. Animals with small testes are examined by squash preparations or, alternatively, by examination of mitotic metaphase preparations. If squash preparations do not yield diakinesis-metaphase 1 cells, analysis of spermatogonia or bone marrow for the presence of unusually long or short chromosomes should be performed.

(f) *Data and report*—(1) *Treatment of results.* (i) Data shall be presented in tabular form and shall include the number of animals at risk, the germ cell stage treated, the number of partial steriles and semisteriles (if the fertility test is used), the number of cytogenetically confirmed translocation heterozygotes (if the fertility test is used, report the number of confirmed steriles and confirmed partial steriles), the translocation rate, and either the standard error of the rate or the upper 95 percent confidence limit on the rate.

(ii) These data shall be presented for both treated and control groups. Historical or concurrent controls shall be specified, as well as the randomization procedure used for concurrent controls.

(2) *Statistical evaluation*. Data shall be evaluated by appropriate statistical methods.

(3) *Interpretation of results.* (i) There are several criteria for determining a positive result, one of which is a statistically significant dose-related increase in the number of heritable translocations. Another criterion may be based upon detection of a reproducible and statistically significant positive response for at least one of the test points.

(ii) A test substance which does not produce either a statistically significant dose-related increase in the number of heritable translocations or a statistically significant and reproducible positive response at any one of the test points is considered nonmutagenic in this system.

(iii) Both biological and statistical significance should be considered together in the evaluation.

(4) *Test evaluation.* (i) Positive results in the heritable translocation assay indicate that under the test conditions the test substance causes heritable chromosomal damage in the test species.

(ii) Negative results indicate that under the test conditions the test substance does not cause heritable chromosomal damage in the test species.

(5) *Test report.* In addition to the reporting recommendations as specified under 40 CFR part 792, subpart J, the following specific information shall be reported:

(i) Species, strain, age, weight and number of animals of each sex in each group.

(ii) Test chemical vehicle, route and schedule of administration, toxicity data.

(iii) Dosing regimen, doses tested and rationale for dosage selection.

(iv) Mating schedule, number of females mated to each male.

(v) The use of historical or concurrent controls.

(vi) Screening procedure including the decision criteria used and the method by which they were determined.

(vii) Dose-response relationship, if applicable.

(g) *References.* For additional background information on this test guideline the following references should be consulted:

(1) Generoso, W.M., Bishop, J.B., Goslee, D.G., Newell, G.W., Sheu, G-J, von Halle, E. ''Heritable translocation test in mice,'' *Mutation Research,* 76:191–215 (1980).

(2) [Reserved]

[50 FR 39397, Sept. 27, 1985, as amended at 52 FR 19081, May 20, 1987]

§ 798.5500 Differential growth inhibition of repair proficient and repair deficient bacteria: "Bacterial DNA damage or repair tests."

(a) *Purpose.* Bacterial DNA damage or repair tests measure DNA damage which is expressed as differential cell killing or growth inhibition of repair deficient bacteria in a set of repair proficient and deficient strains. These tests do not measure mutagenic events *per se.* They are used as an indication of the interaction of a chemical with genetic material implying the potential for genotoxicity.

(b) *Definition.* Test for differential growth inhibition of repair proficient and repair deficient bacteria measure differences in chemically induced cell killing between wild-type strains with full repair capacity and mutant strains deficient in one or more of the enzymes which govern repair of damaged DNA.

(c) *Reference substances.* These may include, but need not be limited to, chloramphenicol or methyl methanesulfonate.

(d) *Test method*—(1) *Principle.* The tests detect agents that interact with cellular DNA to produce growth inhibition or killing. This interaction is recognized by specific cellular repair systems. The assays are based upon the use of paired bacterial strains that differ by the presence of absence of specific DNA repair genes. The response is expressed in the preferential inhibition of growth or the preferential killing of the DNA repair deficient strain since it is incapable of removing certain chemical lesions from its DNA.

(2) *Description.* Several methods for performing the test have been described. Those described here are:

(i) Tests performed on solid medium (diffusion tests).

(ii) Tests performed in liquid culture (suspension tests).

(3) *Strain selection*—(i) *Designation.* At the present time, *Escherichia coli polA* (W3110/p3478) or *Bacillus subtilis rec* (H17/M45) pairs are recommended. Other pairs may be utilized when appropriate.

(ii) *Preparation and storage.* Stock culture preparation and storage, growth requirements, method of strain identification and demonstration of appropriate phenotypic requirements should be performed using good microbiological techniques and should be documented.

(4) *Bacterial growth.* Good microbiological techniques should be used to grow fresh cultures of bacteria. The phase of growth and cell density should be documented and should be adequate for the experimental design.

(5) *Metabolic activation.* Bacteria should be exposed to the test substance both in the presence and absence of an appropriate metabolic activation system. The most commonly used system

is a cofactor supplemented postmitochondrial fraction prepared from the livers of rodents treated with enzyme inducing agents. The use of other species, tissues or techniques may also be appropriate.

(6) *Control groups*—(i) *Concurrent controls.* Concurrent positive, negative, and vehicle controls should be included in each assay.

(ii) *Negative controls.* The negative control should show nonpreferential growth inhibition (i.e., should affect both strains equally). Chloramphenicol is an example of a negative control.

(iii) *Genotype specific controls.* Examples of genotype specific positive controls are methyl methanesulfonate for *polA* strains and mitomycin C for *rec* strains.

(iv) *Positive controls to ensure the efficacy of the activation system.* The positive control reference substance for tests including a metabolic activation system should be selected on the basis of the type of activation system used in the test.

(v) *Other positive controls.* Other positive control reference substances may be used.

(7) *Test chemicals*—(i) *Vehicle.* Test chemicals and positive and negative control reference substances should be dissolved in an appropriate vehicle and then further diluted in vehicle for use in the assay.

(ii) *Exposure concentrations.* The test should initially be performed over a broad range of concentrations. Among the criteria to be taken into consideration for determining the upper limits of test chemical concentration are cytotoxicity and solubility. Cytotoxicity of the test chemical may be altered in the presence of metabolic activation systems. For freely soluble nontoxic chemicals, the upper test chemical concentration should be determined on a case by case basis. Because results are expressed as diameters of zones of growth inhibition in the diffusion test, it is most important that the amounts of chemical on the disc (or in the wells) are exact replicates. When appropriate, a positive response should be confirmed by testing over a narrow range of concentrations.

(e) *Test performance*—(1) *Diffusion assay*—(i) *Disc diffusion assays.* Disc diffusion assays. may be performed in two ways:

(A) A single strain of bacteria may be added to an agar overlay or spread on the surface of the agar and the test chemical placed on a filter disc on the surface of the agar or;

(B) DNA repair proficient and DNA repair deficient bacteria may be streaked in a line on the surface of the agar of the same plate and a disc saturated with test chemical placed on the surface of the agar in contact with the streaks.

(ii) *Well diffusion assays.* In well diffusion assays, bacteria may be either added to the agar overlay or spread onto the surface of the agar. A solution of the test chemical is then placed into a well in the agar.

(2) *Suspension assays.* (i) A bacterial suspension may be exposed to the test chemical and the number of surviving bacteria determined (as colony-forming units) either as a function of time of treatment or as a function of the concentration of test agent.

(ii) Nonturbid suspensions of bacteria may be exposed to serial dilutions of the test agent and a minimal inhibitory concentration for each strain determined, as evidenced by the presence or absence of visible growth after a period of incubation.

(iii) Paired bacterial suspensions (usually with some initial turbidity) may be treated with a single dose of the chemical. Positive results are indicated by a differential inhibition in the rate of increase of turbidity of the paired cultures.

(3) *Number of cultures.* When using a plate diffusion procedure, at least two independent plates should be used at each dilution. In liquid suspension assays, at least two independent specimens for determination of the number of viable cells should be plated.

(4) *Incubation conditions.* All plates in a given test should be incubated for the same time period. This incubation period should be for 18 to 24 hrs at 37 ° C.

(f) *Data and report*—(1) *Treatment of results*—(i) *Diffusion assays.* Results should be expressed in diameters of zones of growth inhibition in millimeters or as areas derived therefrom as

mm^2. Dose-response data, if available, should be presented using the same units.

(ii) *Liquid suspension assays.* (A) Survival data can be presented as dose responses, preferably as percentage of survivors or fractional survival of each strain or as a relative survival (ratio) of the two strains.

(B) Results can also be expressed as the concentrations required to effect a predetermined survival rate (e.g., D_{37}, the dose permitting 37 percent survival). These data are derived from the survival curve. The concentration should be expressed as weight per volume, as moles, or as molarity.

(C) Similarly, results can be expressed as minimal inhibitory concentration or as minimal lethal dose. The former is determined by the absence of visible growth in liquid medium and the latter is determined by plating dilutions onto semisolid media.

(iii) In all tests, concentrations must be given as the final concentrations during the treatment. Raw data, prior to transformation, should be provided. These should include actual quantities measured, e.g., neat numbers. For measurement of diffusion, the diameters of the discs and/or well should be indicated and the measurements should indicate whether the diameter of the discs and/or well was subtracted. Moreover, mention should be made as to whether the test chemical gave a sharp, diffuse, or double-zone of growth inhibition. If it is the latter, the investigator should indicate whether the inner or the outer zone was measured.

(iv) Viability data should be given as the actual plate counts with an indication of the dilution used and the volume plated or as derived titers (cells per ml). Transformed data alone in the absence of experimental data are not acceptable (i.e, ratios, differences, survival fraction).

(2) *Statistical evaluation.* Data should be evaluated by appropriate statistical methods.

(3) *Interpretation of results.* (i) There are several criteria for determining a positive result, one of which is a statistically significant dose-related preferential inhibition or killing of the repair deficient strain. Another criterion may be based upon detection of a reproducible and statistically significant positive response for at least one of the test points.

(ii) A test substance which does not produce either a statistically significant dose-related preferential inhibition or killing of the repair deficient strain or a statistically significant and reproducible positive response at any one of the test points is considered not to interact with the genetic material of the organisms used in assay.

(iii) Both biological and statistical significance should be considered together in the evaluation.

(4) *Test evaluation.* DNA damage tests in bacteria do not measure DNA repair *per se* nor do they measure mutations. They measure DNA damage which is expressed as cell killing or growth inhibition. A positive result in a DNA damage test in the absence of a positive result in another system is difficult to evaluate in the absence of a better data base.

(5) *Test report.* In addition to the reporting recommendations as specified under 40 CFR part 792, subpart J the following specific information should be reported:

(i) Bacterial strains used.

(ii) Phase of bacterial cell growth at time of use in the assay.

(iii) Media composition.

(iv) Details of both the protocol used to prepare the metabolic activation system and its use in the assay.

(v) Treatment protocol, including doses used and rationale for dose selection, positive and negative controls.

(vi) Method used for determination of degree of cell kill.

(vii) Dose-response relationship, if applicable.

(g) *References.* For additional background information on this test guideline the following references should be consulted:

(1) Ames, B.N., McCann, J., Yamasaki, E. ''Methods for detecting carcinogens and mutagens with the *Salmonella*/mammalian-microsome mutagenicity test,'' *Mutation Research,* 31:347–364 (1975).

(2) Kada, T., Sadie, Y., Tutikawa, K. ''In vitro and host-mediated ''rec-

assay'' procedures for screening chemical mutagens; and phloxine, a mutagenic red dye detected,'' *Mutation Research*, 16:165–174 (1972).

(3) Leifer, Z., Kada, T., Mandel, M., Zeiger, E., Stafford, R., Rosenkranz, H.S. ''An evaluation of bacterial DNA repair tests for predicting genotoxicity and carcinogenicity: A report of the U.S. EPA's Gene-Tox Program,'' *Mutation Research*, 87:211–297 (1981).

(4) Slater, E.E., Anderson, M.D., Rosenkranz, H.S. ''Rapid detection of mutagens and carcinogens.'' *Cancer Research*, 31:970–973 (1971).

§ 798.5955 Heritable translocation test in drosophila melanogaster.

(a) *Purpose.* The heritable translocation test in *Drosophila* measures the induction of chromosomal translocations in germ cells of insects. Stocks carrying genetic markers on two or more chromosomes are used to follow the assortment of chromosomes in meiosis. The F_1 male progeny of treated parents are individually mated to females and the F_2 progeny phenotypes are scored. The observed spectrum of phenotypes is used to determine the presence or absence of a translocation. This is usually indicated by a lack of independent assortment of genes on different chromosomes.

(b) *Definitions*—(1) Chromosome mutations are chromosomal changes resulting from breakage and reunion of chromosomes. Chromosomal mutations are also produced through nondisjunction of chromosomes during cell division.

(2) Reciprocal translocations are chromosomal translocations resulting from reciprocal exchanges between two or more chromosomes.

(3) Heritable translocations are reciprocal translocations transmitted from parent to the succeeding progeny.

(c) *Reference substances.* These may include, but need not be limited to, ethyl methanesulfonate or N-dimethylnitrosamine.

(d) *Test method*—(1) *Principle.* The method is based on the principle that balanced reciprocal chromosomal translocations can be induced by chemicals in the germ cells of treated flies and that these translocations are detected in the F_2 progeny using genetic markers (mutations). Different mutations may be used as genetic markers and two or more of the four chromosomes may be genetically marked for inclusion in this test.

(2) *Description.* Wild-type males are treated with chemical and bred with females of known genetic markers. The F_1 males are collected and individually bred with virgin females of the female parental stock. The resulting F_2 progeny are scored. Putative translocation carriers are confirmed with an F_3 cross.

(i) *Illustrative example.* The following example serves to illustrate the method. Males carrying genes for red eye color on chromosomes II and III are bred with females of white eye color carrying alleles for brown (bw) on the second chromosome and scarlet (st) and pink (pp) on the third chromosome. The F_1 male progeny are bred with virgin females of the female parental stock and the resulting F_2 progeny are examined for eye color phenotypes. If there is no translocation in the F_1 male, then the resulting F_2 progeny will have four eye color phenotypes: red, white, orange, and brown. If the F_1 male carries a translocation between chromosomes II and III, only red and white eye phenotypes are obtained in the F_2 generation. This happens because the F_1 translocation heterozygote produces two balanced (carrying either the parental or the translocated configuration of markers) and two unbalanced gametes. The unbalanced gametes (carrying one normal and one translocated chromosome) are unable to develop into normal individuals in the F_2 generation.

(ii) [Reserved]

(3) *Drosophila stocks.* Wild-type males and females of the genotype bw:st:pp (white eyes) may be used in the heritable translocation test. Other appropriately marked *Drosophila* stocks may also be used.

(4) *Control groups.* (i) Concurrent positive and negative (vehicle) controls should be included in each experiment.

(ii) Negative (vehicle) controls should be included. The size of the negative (vehicle) control group should be determined by the availability of appropriate laboratory historical control data.

(iii) If the historical control data are of sufficient numbers, concurrent controls may not be necessary.

(5) *Test chemicals*—(i) *Vehicle.* Test chemicals should be dissolved in water. Compounds which are insoluble in water may be dissolved or suspended in appropriate vehicles (e.g., a mixture of ethanol and Tween-60 or 80), and then diluted in water or saline prior to administration. Dimethylsulfoxide should be avoided as a vehicle.

(ii) *Dose levels.* For the initial assessment of mutagenicity, it may be sufficient to test a single dose of the test substance. This dose should be the maximum tolerated dose or that which produces some indication of toxicity. If the test is being used to verify mutagenic activity, at least two additional exposure levels should be used.

(iii) *Route of administration.* Exposure may be oral, by injection or by exposure to gases or vapours. Feeding of the test compound may be done in sugar solution. When necessary, substances may be dissolved in 0.7 percent NaCl solution and injected into the thorax or abdomen.

(e) *Test performance*—(1) *P1 mating.* (i) In the primary screen of a chemical, it is enough to sample one germ cell stage, either mature sperm or spermatids (for indirect acting mutagens). Other stages may be sampled if needed, i.e., when mature germ cells give a positive result and data from earlier germ cells are needed for the purpose of risk assessment. Thus, the treated males may be mated only once for a period of 3 days to sample sperm or transferred every 2 to 3 days to cover the entire germ cell cycle.

(ii) Mass matings may be performed because the control rate for translocations in the available literature is very low (near 0) and clustered events are extremely rare. Mated females may be aged for 2 weeks in order to recover an enhanced incidence of translocation due to the storage effect. The females are then allowed to lay eggs and F_1 males are collected for test mating.

(2) *F_1* mating. F_1 males should be bred with virgin females of the parental female stock. Since each F_1 male represents one treated gamete of the male parent, the F_1 males have to be mated individually to virgin females. Each F_1 male should be mated to three females to ensure sufficient progeny.

(3) *Scoring the F_2 generation.* F_2 cultures (each representing 1 F_1 male tested) should be scored for the presence or absence of phenotype variations (linkage of markers) from the expected types. The test should be designed with a predetermined sensitivity and power. The number of flies in each group should reflect these defined parameters. The spontaneous mutant frequency observed in the appropriate control group will strongly influence the number of treated chromosomes that must be analyzed to detect substances which show mutation rates close to those of the controls. A positive test should be confirmed by F_3 mating trials.

(4) *Number of replicate experiments.* Replicate experiments are usually performed for each dose of the compound tested. If a chemical is a potent inducer of translocations, one experiment may be sufficient. Otherwise two or three replicate experiments should be done.

(f) *Data and report*—(1) *Treatment of results.* Data should be tabulated to show the number of translocations and the number of fertile F_1 males at each exposure for each germ cell stage sampled.

(2) *Statistical evaluation.* Data should be evaluated by appropriate statistical methods.

(3) *Interpretation of results.* (i) There are several criteria for determining a positive result, one of which is a statistically significant dose-related increase in the number of heritable translocations. Another criterion may be based upon detection of a reproducible and statistically significant positive response for at least one of the test points.

(ii) A test substance which does not produce either a statistically significant dose-related increase in the number of heritable translocations or a statistically significant and reproducible positive response at any one of the test points is considered nonmutagenic in this system.

(iii) Both biological and statistical significance should be considered together in the evaluation.

(4) *Test evaluation.* (i) Positive results in the heritable translocation test in *Drosophila* indicate that under the test conditions the test substance causes chromosome damage in germ cells of this insect.

(ii) Negative results indicate that under the test conditions the test substance does not cause chromosomal damage in *D. melanogaster.*

(5) *Test report.* In addition to the reporting recommendations as specified under 40 CFR part 792, subpart J, the following specific information should be reported:

(i) *Drosophila* stock used in the assay, age of insects, number of males treated, number of F_2 cultures established, number of replicate experiments.

(ii) Test chemical vehicle, treatment and mating schedule, exposure levels, toxicity data, dose and route of exposure.

(iii) Positive and negative (vehicle) controls.

(iv) Historical control data, if available.

(v) Number of chromosomes scored.

(vi) Criteria for scoring mutant chromosomes.

(vii) Dose-response relationship, if applicable.

(g) *References.* For additional background information on this test guideline the following references should be consulted:

(1) Wurgler, F.E., Sobels, F.H., Vogel, E. ''*Drosophila* as assay system for detecting genetic changes,'' *Handbook of mutagenicity test procedures.* Eds. Kilby, B.J., Legator, M., Nichols, W., Ramel, C. (Amsterdam: Elsevier/North Holland Biomedical Press, 1979) pp. 335–374.

(2) [Reserved]

Subpart G—Neurotoxicity

§ 798.6050 Functional observational battery.

(a) *Purpose.* In the assessment and evaluation of the potential human health effects of substances, it may be necessary to test for neurotoxic effects. Substances that have been observed to cause neurotoxic signs (e.g., convulsions, tremors, ataxia) in other toxicity tests, as well as those having a structural similarity to known neurotoxicants, should be evaluated for neurotoxicity. The functional observational battery is a noninvasive procedure designed to detect gross functional deficits in young adults resulting from exposure to chemicals and to better quantify neurotoxic effects detected in other studies. This battery of tests is not intended to provide a detailed evaluation of neurotoxicity. It is designed to be used in conjunction with neuropathologic evaluation and/or general toxicity testing. Additional functional tests may be necessary to assess completely the neurotoxic potential of a chemical.

(b) *Definitions.* (1) Neurotoxicity is any adverse effect on the structure or function of the central and/or peripheral nervous system related to exposure to a chemical substance.

(2) A toxic effect is an adverse change in the structure or function of an experimental animal as a result of exposure to a chemical substance.

(c) *Principle of the test method.* The material is administered by an appropriate route to laboratory rodents. The animals are observed under carefully standardized conditions with sufficient frequency to ensure the detection of behavioral and/or neurologic abnormalities, if present. Various functions that could be affected by neurotoxicants are assessed during each observation period.

(d) *Test procedures*—(1) *Animal selection*—(i) *Species and strain.* The laboratory rat or mouse is recommended. Although information will generally be lacking, whenever possible the choice of species should take into consideration such factors as the comparative metabolism of the chemical and species sensitivity to the toxic effects of the test substance, as evidenced by the results of other studies. The potential for combined studies should also be considered. Standard strains should be used.

(ii) *Age.* Young adult animals (at least 42 days old for the rat or mouse) shall be used.

(iii) *Sex.* (A) Equal numbers of animals of each sex are required for each dose level.

(B) The females shall be nulliparous and nonpregnant.

(2) *Number of animals.* At least eight animals of each sex should be used at

each dose level and should be designated for behavioral testing. If interim sacrifices are planned, the number should be increased by the number of animals scheduled to be sacrificed before the end of the study. Animals shall be randomly assigned to treatment and control groups.

(3) *Control groups.* (i) A concurrent (''sham'' exposure or vehicle) control group is required. Subjects shall be treated in the same way as for an exposure group except that administration of the test substance is omitted.

(ii) Concurrent or historic data from the laboratory performing the testing shall provide evidence of the ability of the procedures used to detect major neurotoxic endpoints such as limb weakness or paralysis (e.g., acrylamide), CNS stimulation (e.g., β, β′-iminodiproprionitrile) autonomatic signs (e.g., physostigmine).

(iii) A satellite group may be treated with the high dose level for the duration of exposure and observed for reversibility, persistence, or delayed occurrence of toxic effects for a post-treatment period of appropriate duration, normally not less than 28 days.

(4) *Dose levels and dose selection.* At least 3 doses, equally spaced on a log scale (e.g., ½ log units) over a range of at least 1 log unit shall be used in addition to a zero dose or vehicle administration. The data should be sufficient to produce a dose-effect curve.

(i) The highest dose shall produce (A) clear behavioral effects or (B) life-threatening toxicity.

(ii) The data from the lower doses must show either (A) graded dose-dependent effects at 2 dose levels or (B) no effects at 2 dose levels, respectively.

(5) *Duration and frequency of exposure.* The duration and frequency of exposure will be specified in the test rule.

(6) *Route of exposure.* The test substance shall be administered by the route specified in the test rule. This route will usually be the one most closely approximating the expected route of human exposure. The exposure potocol shall conform to that outlined in the appropriate acute or subchronic toxicity study guideline under subpart B or subpart C of this part.

(7) *Combined protocol.* Subjects used for other toxicity studies may be used if none of the requirements of either study are violated by the combination.

(8) *Study conduct.* (i) All animals in a given study should be observed carefully by trained technicians who are blind with respect to the animals' treatments. Standard procedures to minimize observer variability shall be followed. Where possible, it is advisable that the same observer be used to evaluate the animals in a given study. If this is not possible, some demonstration of inter-observer reliability is required. All animals should be observed prior to initiation of exposure. Subsequent observations should be made with sufficent frequency to ensure the detection of behavioral and/or neurologic abnormalities, if present. At minimum, observations at 1 hour, 6 hours, 24 hours, 7 days, and 14 days and monthly thereafter are recommended. In a subchronic study, subsequent to the first exposure all observations should be made before the daily exposure. The animals should be removed from the home cage to a standard arena for observation. Effort should be made to ensure that variations in the test conditions are minimal and are not systematically related to treatment. Among the variables that can affect behavior are sound level, temperature, humidity, lighting, odors, time of day, and environmental distractions. Explicit, operationally defined scales for each function should be used. The development of objective quantitative measures of the observational endpoints specified is encouraged.

(ii) The following is a minimal list of observations that shall be noted:

(A) Any unusual responses with respect to body position, activity level, coordination of movement, and gait.

(B) Any unusual or bizarre behavior including, but not limited to, headflicking, head searching, compulsive biting or licking, self-mutilation, circling, and walking backwards.

(C) The presence of:

(*1*) Convulsions.

(*2*) Tremors.

(*3*) Increased levels of lacrimation and/or red-colored tears.

(*4*) Increased levels of salivation.

(*5*) Piloerection.

(*6*) Pupillary dilation or constriction.

(*7*) Unusual respiration (shallow, labored, dyspneic, gasping, and retching) and/or mouth breathing.

(*8*) Diarrhea.

(*9*) Excessive or diminished urination.

(*10*) Vocalization.

(D) Forelimb/hindlimb grip strength. The procedure described by Meyer et al. (1979), under paragraph (f)(9) of this section is recommended.

(E) Sensory function. A simple assessment of sensory function (vision, audition, pain perception) shall be made. Marshall et al. (1971) under paragraph (f)(8) of this section have described a neurologic exam for this purpose; these procedures are also discussed by Deuel (1977), under paragraph (f)(4) of this section. Irwin (1968) under paragraph (f)(7) of this section described a number of reflex tests intended to detect gross sensory deficits, including the visual placing response, Preyer reflex, and tail pinch. Many procedures have been developed for assessing pain perception (e.g., Ankier, 1974 under paragraph (f)(1) of this section; D'Amour and Smith 1941 under paragraph (f)(3) of this section; Evans 1971 under paragraph (f)(6) of this section).

(e) *Data reporting and evaluation.* In addition to the reporting requirements specified under 40 CFR part 792 subpart J the final test report must include the following information.

(1) *Description of system and test methods.* (i) A detailed description of the procedures used to standardize observation, including the arena and operational definitions for scoring observations.

(ii) Positive control data from the laboratory performing the test that demonstrate the sensitivity of the procedures being used. Historic data may be used if all aspects of the experimental protocol are the same, including personnel.

(2) *Results.* The following information must be arranged by test group dose level.

(i) In tabular form, data for each animal must be provided showing:

(A) Its identification number.

(B) Its body weight and score on each sign at each observation time, the time and cause of death (if appropriate).

(ii) Summary data for each group must include:

(A) The number of animals at the start of the test.

(B) The number of animals showing each observation score at each observation time.

(C) The percentage of animals showing each abnormal sign at each observation time.

(D) The mean and standard deviation for each continuous endpoint at each observation time.

(3) *Evaluation of data.* The findings of a functional observational battery should be evaluated in the context of preceding and/or concurrent toxicity studies and any correlative histopathological findings. The evaluation shall include the relationship between the doses of the test substance and the presence or absence, incidence and severity, of any neurotoxic effects. The evaluation should include appropriate statistical analyses. Choice of analyses should consider tests appropriate to the experimental design and needed adjustments for multiple comparisons.

(f) *References.* For additional background information on this test guideline the following references should be consulted:

(1) Ankier, S.I. ''New hot plate tests to quantify antinociceptic and narcotic antagonist activities,'' *European Journal of Pharmacology,* 27: 1–4 (1974).

(2) Coughenour, L.L., McLean, J.R. and Parker, R.B. ''A new device for the rapid measurement of impaired motor function in mice,'' *Pharmacology, Biochemistry and Behavior, 6:* 351–353 (1977).

(3) D'Amour, F.E., Smith, D.L. ''A method for determining loss of pain sensation,'' *Journal of Pharmacology and Experimental Therapeutics, 72:* 74–79 (1941).

(4) Deuel, R.K. ''Determining sensory deficits in animals,'' *Methods in Psychobiology* Ed. Myers R.D. (New York: Academic Press, 1977) pp. 99–125.

(5) Edwards, P.M., Parker, V.H. ''A simple, sensitive and objective method for early assessment of acrylamide neuropathy in rats,'' *Toxicology and Applied Pharmacology, 40:* 589–591 (1977).

(6) Evans, W.O. ''A new technique for the investigation of some analgesic

drugs on reflexive behavior in the rat,'' *Psychopharmacologia, 2:* 318–325 (1961).

(7) Irwin, S. ''Comprehensive observational assessment: Ia. A systematic quantitative procedure for assessing the behavioral and physiologic state of the mouse,'' *Psychopharmacologia, 13:* 222–257 (1968).

(8) Marshall, J.F., Turner, B.H., Teitlbaum, P. ''Sensory neglect produced by lateral hypothalamic damage,'' *Science, 174:* 523–525 (1971).

(9) Meyer, O.A., Tilson, H.A., Byrd, W.C., Riley, M.T. ''A method for the routine assessment of fore- and hindlimb grip strength of rats and mice,'' *Neurobehavioral Toxicology, 1:* 233–236 (1979).

[50 FR 39397, Sept. 27, 1985, as amended at 52 FR 19082, May 20, 1987]

§ 798.6200 Motor activity.

(a) *Purpose*—(1) *General.* In the assessment and evaluation of the toxic characteristics of a substance, determination of the effects of administration of the substance on motor activity is useful when neurotoxicity is suspected.

(2) *Acute Motor Activity Test.* The purpose of the acute motor activity test is to examine changes in motor activity occurring over a range of acute exposure levels. These changes may then be evaluated in the context of changes occurring in other organ systems. This test is an initial step in determining the potential of a substance to produce acute neurotoxicity and may be used to screen members of a class of substances for known neurotoxicity, and/or to establish a dosage regimen prior to the initiation of subchronic neurotoxicity testing.

(3) *Subchronic Motor Activity Test.* The purpose of the subchronic motor activity test is to determine whether the repeated administration of a suspected neurotoxicant results in changes in motor activity. These changes may be evaluated in the context of changes occurring in other organ systems. This test is an initial step in determining the potential of a substance to produce subchronic neurotoxicity.

(b) *Definitions.* (1) Neurotoxicity is the adverse effect on the structure or function of the central and/or peripheral nervous system related to exposure to a chemical substance.

(2) Motor activity is any movement of the experimental animal.

(3) A toxic effect is an adverse change in the structure or function of an experimental animal as a result of exposure to a chemical substance.

(c) *Principle of the test method.* The test substance is administered to several groups of experimental animals, one dose being used per group. Measurements of motor activity are made. The exposure levels at which significant changes in motor activity are produced are compared to those levels which produce toxic effects not originating in the central and/or peripheral nervous system.

(d) *Test procedures*—(1) *Animal selection*—(i) *Species and strain.* Testing shall be performed in a laboratory rat or mouse. The choice of species should take into consideration such factors as the comparative metabolism of the chemical and species sensitivity to the toxic effects of the test substance, as evidenced by the results of other studies, the potential for combined studies, and the availability of other toxicity data for the species.

(ii) *Age.* Young adult animals (at least 42 days old for rat or mouse) should be used.

(iii) *Sex.* (A) Equal numbers of animals of each sex are required for each dose level for the motor activity test.

(B) The females shall be nulliparous and nonpregnant.

(2) *Number of animals.* Animals shall be randomly assigned to test and control groups. Each test or control group must be designed to contain a sufficient number of animals at the completion of the study to detect a 40 percent change in activity of the test groups relative to the control group with 90 percent power at the 5 percent level. For most designs, calculations can be made according to Dixon and Massey (1957) under paragraph (f)(1) of this section, Neter and Wasserman (1974) under paragraph (f)(5) of this section, Sokal and Rohlf (1969) under paragraph (f)(9) of this section, or Jensen (1972) under paragraph (f)(3) of this section.

(3) *Control groups.* (i) A concurrent control group is required. This group must be an untreated group, or, if a vehicle is used in administering the test substance, a vehicle control group. If

the toxic properties of the vehicle are not known or cannot be made available, both untreated and vehicle control group are required.

(ii) Positive control data are required to demonstrate the sensitivity and reliability of the activity measuring device and testing procedure. These data should demonstrate the ability to detect increases or decreases in activity and to generate a dose-effect curve or its equivalent using three values of the dose or equivalent independent variable. A single administration of the dose (or equivalent) is sufficient. It is recommended that chemical exposure be used to collect positive control data. Positive control data shall be collected at the time of the test study unless the laboratory can demonstrate the adequacy of historical data for this purpose.

(iii) A satellite group may be treated with the high dose level for 90 days and observed for reversibility, persistence or delayed occurrence of toxic effects for a post-treatment period of appropriate length, normally not less than 28 days.

(4) *Dose levels and dose selection.* At least 3 doses, equally spaced on a log scale (e.g., ½ log units) over a range of at least 1 log unit shall be used in addition to a zero dose or vehicle administration. The data should be sufficient to produce a dose-effect curve.

(i) The highest dose shall produce (A) clear effects on motor activity or (B) life-threatening toxicity.

(ii) The data from the lower doses must show either (A) graded dose-dependent effects at 2 dose levels or (B) no effects at 2 dose levels, respectively.

(5) *Duration of testing.* The duration of exposure will be specified in the test rule.

(6) *Route of administration.* The test substance shall be administered by the method specified in the test rule. This will usually be the route most closely approximating the route of human exposure. The exposure protocol shall conform to that outlined in the appropriate acute or subchronic toxicity study guideline.

(7) *Combined protocol.* The tests described herein may be combined with any other toxicity study, as long as none of the requirements of either are violated by the combination.

(8) *Study conduct*—(i) *General.* Motor activity must be monitored by an automated activity recording apparatus. The device used must be capable of detecting both increases and decreases in activity, i.e. baseline activity as measured by the device must not be so low as to preclude decreases nor so high as to preclude increases. Each device shall be tested by standard procedure to ensure, to the extent possible, reliability of operation across devices and across days for any one device. In addition, treatment groups must be balanced across devices. Each animal shall be tested individually. The test session shall be long enough for motor activity to approach asymptotic levels by the last 20 percent of the session for most treatments and animals. All sessions should have the same duration. Treatment groups shall be counter-balanced across test times. Effort should be made to ensure that variations in the test conditions are minimal and are not systematically related to treatment. Among the variables which can affect motor activity are sound level, size and shape of the test cage, temperature, relative humidity, lighting conditions, odors, use of home cage or novel test cage and environmental distractions. Tests shall be executed by an appropriately trained individual.

(ii) *Acute.* Testing shall be timed to include the time of peak signs.

(iii) *Subchronic.* All animals shall be tested prior to initiation of exposure and at 30 ±2, 60 ±2 and 90 ±2 days during the exposure period. Testing shall occur prior to the daily exposure. Animals shall be weighed on each test day and at least once weekly during the exposure period.

(e) *Data reporting and evaluation.* In addition to the reporting requirements specified under 40 CFR part 792, subpart J the final test report must include the following information:

(1) *Description of system and test methods.* (i) Positive control data from the laboratory performing the test which demonstrate the sensitivity of the procedure being used.

(ii) Procedures for calibrating and assuring the equivalence of devices and balancing treatment groups.

(2) *Results.* The following information must be arranged by test group (dose level).

(i) In tabular form, data must be provided showing for each animal:

(A) Its identification number.

(B) Body weight, total session activity counts, and intrasession subtotals for each date measured.

(ii) Group summary data should also be reported.

(3) *Evaluation of data.* An evaluation of the test results (including statistical analysis comparing total activity counts at the end of exposure of treatment vs control animals must be made and supplied. This submission must include dose-effect curves for motor activity expressed as activity counts.

(f) *References.* For additional background information on this test guideline the following references should be consulted:

(1) Dixon, W.J., Massey, E.J. *Introduction to Statistical Analysis* 2nd Ed. (New York: McGraw-Hill, 1957).

(2) Finger, F.W. ''Measuring behavioral activity,'' *Methods in Psychobiology* Vol. 2. Ed. R.D. Myers (New York: Academic, 1972) pp. 1–19.

(3) Jensen, D.R. ''Some simultaneous multivariate procedures using Hotelling's T^2 Statistics,'' *Biometrics,* 28:39–53 (1972).

(4) Kinnard, E.J. and Watzman, N. ''Techniques utilized in the evaluation of psychotropic drugs on animals activity,'' Journal of Pharmaceutical Sciences, 55:995–1012 (1966).

(5) Neter, J. and Wasserman, W. *Applied Linear Statistical Models.* Homewood, Richard D. Irwin, Inc., 1974.

(6) Reiter, L.E. ''Use of activity measures in behavioral toxicology,'' *Environmental Health Perspectives,* 26:9–20 (1978).

(7) Reiter, L.W. and MacPhail, R.C. ''Motor Activity: A survey of methods with potential use in toxicity testing,'' *Neurobehavioral Toxicology,* 1: Suppl. 1, 53–66 (1979).

(8) Robbins, T.W. ''A critique of the methods available for the measurement of spontaneous motor activity,'' *Handbook of Psychopharmacology.* Vol. 7. Eds. Iversen, L.L., Iversen, D.S., Snyder, S.H. (New York: Plenum, 1977) pp. 37–82.

(9) Sokal, R.P. and Rohlf, E.J. *Biometry.* (San Francisco: W.H. Freeman and Co., 1969).

[50 FR 39397, Sept. 27, 1985, as amended at 52 FR 19082, May 20, 1987]

§ 798.6400 Neuropathology.

(a) *Purpose.* The techniques in this guideline are designed to develop data on morphologic changes in the nervous system for chemical substances and mixtures subject to such testing under the Toxic Substances Control Act. The data will detect and characterize morphologic changes, if and when they occur, and determine a no-effect level for such changes. Neuropathological evaluation should be complemented by other neurotoxicity studies, e.g. behavioral and neurophysiological studies. Neuropathological evaluation may be done following acute, subchronic or chronic exposure.

(b) *Definition.* Neurotoxicity or a neurotoxic effect is an adverse change in the structure or function of the nervous system following exposure to a chemical agent.

(c) *Principle of the test method.* The test substance is administered to several groups of experimental animals, one dose being used per group. The animals are sacrificed and tissues in the nervous system are examined grossly and prepared for microscopic examination. Starting with the highest dosage level, tissues are examined under the light microscope for morphologic changes, until a no effect level is determined. In cases where light microscopy has revealed neuropathology, the no effect level may be confirmed by electron microscopy.

(d) *Test procedure*—(1) *Animal selection*—(i) *Species and strain.* Testing shall be performed in the species being used in other tests for neurotoxicity. This will generally be the laboratory rat. The choice of species shall take into consideration such factors as the comparative metabolism of the chemical and species sensitivity to the toxic effects of the test substance, as evidenced by the results of other studies, the potential for combined studies, and the availability of other toxicity data for the species.

(ii) *Age.* Animals shall be young adults (150–200 gm for rats) at the start of exposure.

(iii) *Sex.* Both sexes shall be used unless it is demonstrated that one sex is refractory to the effects.

(2) *Number of animals.* A minimum of six animals per group shall be used. The tissues from each animal shall be examined separately. It is recomse (iv)mended that ten animals per group be used.

(3) *Control groups.* (i) A concurrent control group(s) is (are) required. This group must be an untreated control group or, if a vehicle is used in administering the test substance, a vehicle control group. If the vehicle used has a known or potential toxic property, both untreated and vehicle control groups are required.

(ii) A satellite group of animals may be treated with the high level for 90 days and observed for reversibility, persistence, or delayed occurrence of toxic effects for a post-treatment period of appropriate length; normally not less than 28 days.

(4) *Dose levels and dose selection.* At least 3 doses, equally spaced on a log scale (e.g., ½ log units) over a range of at least 1 log unit shall be used in addition to a zero dose or vehicle administration. The data should be sufficient to produce a dose-effect curve.

(i) The highest dose shall produce (A) clear behavioral effects or (B) life-threatening toxicity.

(ii) The data from the lower doses must show either (A) graded dose-dependent effects at two dose levels or (B) no effects at two dose levels, respectively.

(5) *Duration of testing.* The exposure duration will be specified in the test rule. This will generally be 90 days exposure.

(6) *Route of administration.* The test substance shall be administered by a route specified in the test rule. This will generally be the route most closely approximating the route of human exposure. The exposure protocol shall conform to that outlined in the appropriate acute or subchronic toxicity guideline.

(7) *Combined protocol.* The tests described herein may be combined with any other toxicity study, as long as none of the requirements of either are violated by the combination.

(8) *Study conduct*—(i) *Observation of animals.* All toxicological (e.g., weight loss) and neurological signs (e.g., motor disturbance) shall be recorded frequently enough to observe any abnormality, and not less than weekly.

(ii) *Sacrifice of animals*—(A) *General.* The goal of the techniques outlined for sacrifice of animals and preparation of tissues is preservation of tissues morphology to simulate the living state of the cell.

(B) *Perfusion technique.* Animals shall be perfused *in situ* by a generally recognized technique. For fixation suitable for light or electronic microscopy, saline solution followed by buffered 2.5 percent glutaraldehyde or buffered 4.0 percent paraformaldehyde, is recommended. While some minor modifications or variations in procedures are used in different laboratories, a detailed and standard procedure for vascular perfusion may be found in the text by Zeman and Innes (1963) under paragraph (f)(7) of this section, Hayat (1970) under paragraph (f)(3) of this section, and by Spencer and Schaumburg (1980) under paragraph (f)(6) of this section. A more sophisticated technique is described by Palay and Chan-Palay (1974) under paragraph (f)(4) of this section.

(C) *Removal of brain and cord.* After perfusion, the bonystructure (cranium and vertebral column) shall be exposed. Animals shall then be stored in fixative-filled bags at 4 °C for 8-12 hours. The cranium and vertebral column shall be removed carefully by trained technicians without physical damage of the brain and cord. Detailed dissection procedures may be found in the text by Palay and Chan-Palay (1974) under paragraph (f)(4) of this section. After removal, simple measurement of the size (length and width) and weight of the whole brain (cerebrum, cerebellum, pons-medulla) shall be made. Any abnormal coloration or discoloration of the brain and cord shall also be noted and recorded.

(D) *Sampling.* Unless a given test rule specifies otherwise, cross-sections of the following areas shall be examined: The forebrain, the center of the cerebrum, the midbrain, the cerebellum

and pons, and the medulla oblongata; the spinal cord at cervical and lumbar swelling (C_3–C_6 and L_1–L_4); Gasserian ganglia, dorsal root ganglia (C_3–C_6, L_1–L_4), dorsal and ventral root fibers (C_3–C_6, L^1–L_4), proximal sciatic nerve (mid-thigh and sciatic notch), sural nerve (at knee), and tibial nerve (at knee). Other sites and tissue elements (e.g., gastrocnemius muscle) should be examined if deemed necessary. Any observable gross changes shall be recorded.

(iii) *Specimen storage.* Tissue samples from both the central and peripheral nervous system shall be further immersion fixed and stored in appropriate fixative (e.g., 10 percent buffered formalin for light microscopy; 2.5 percent buffered gluteraldehyde or 4.0 percent buffered paraformaldehyde for electron microscopy) for future examination. The volume of fixative versus the volume of tissues in a specimen jar shall be no less than 25:1. All stored tissues shall be washed with buffer for at least 2 hours prior to further tissue processing.

(iv) *Histopathology examination.* (A) *Fixation.* Tissue specimens stored in 10 percent buffered formalin may be used for this purpose. All tissues must be immersion fixed in fixative for at least 48 hours prior to further tissue processing.

(B) *Dehydration.* All tissue specimens shall be washed for at least 1 hour with water or buffer, prior to dehydration. (A longer washing time is needed if the specimens have been stored in fixative for a prolonged period of time.) Dehydration can be performed with increasing concentration of graded ethanols up to absolute alcohol.

(C) *Clearing and embedding.* After dehydration, tissue specimens shall be cleared with xylene and embedded in paraffin or paraplast. Multiple tissue specimens (e.g. brain, cord, ganglia) may be embedded together in one single block for sectioning. All tissue blocks shall be labelled showing at least the experiment number, animal number, and specimens embedded.

(D) *Sectioning.* Tissue sections, 5 to 6 microns in thickness, shall be prepared from the tissue blocks and mounted on standard glass slides. It is recommended that several additional sections be made from each block at this time for possible future needs for special stainings. All tissue blocks and slides shall be filed and stored in properly labeled files or boxes.

(E) *Histopathological techniques.* Although the information available for a given chemical substance may dictate test-rule specific changes, the following general testing sequence is proposed for gathering histopathological data:

(*1*) *General staining.* A general staining procedure shall be performed on all tissue specimens in the highest treatment group. Hematoxylin and eosin (H&E) shall be used for this purpose. The staining shall be differentiated properly to achieve bluish nuclei with pinkish background.

(*2*) *Special stains.* Based on the results of the general staining, selected sites and cellular components shall be further evaluated by the use of specific techniques. If H&E screening does not provide such information, a battery of stains shall be used to assess the following components in all appropriate required samples: neuronal body (e.g., Einarson's gallocyanin), axon (e.g., Bodian), myelin sheath (e.g., Kluver's Luxol Fast Blue) and neurofibrils (e.g., Bielchosky). In addition, peripheral nerve fiber teasing shall be used. Detailed staining methodology is available in standard histotechnological manuals such as AFIP (1968) under paragraph (f)(1) of this section, Ralis et al. (1973) under paragraph (f)(5) of this section, and Chang (1979) under paragraph (f)(2) of this section. The nerve fiber teasing technique is discussed in Spencer and Schaumberg (1980) under paragraph (f)(6) of this section. A section of normal tissue shall be included in each staining to assure that adequate staining has occurred. Any changes shall be noted and representative photographs shall be taken. If a lesion(s) is observed, the special techniques shall be repeated in the next lower treatment group until no further lesion is detectable.

(*3*) *Alternative technique.* If the anatomical locus of expected neuro-pathology is well-defined, epoxy-embedded sections stained with toluidine blue may be used for small sized tissue samples. This technique obviates the need

for special stains for cellular components. Detailed methodology is available in Spencer and Schaumberg (1980) under paragraph (f)(6) of this section.

(*4*) *Electron microscopy.* Based on the results of light microscopic evaluation, specific tissue sites which reveal a lesion(s) shall be further evaluated by electron microscopy in the highest treatment group which does not reveal any light microscopic lesion. If a lesion is observed, the next lower treatment group shall be evaluated until no significant lesion is found. Detailed methodology is available in Hayat (1970) under paragraph (f)(3) of this section.

(F) *Examination*—(*1*) *General.* All stained microscopic slides shall be examined with a standard research microscope. Examples of cellular alterations (e.g., neuronal vacuolation, degeneration, and necrosis) and tissue changes (e.g., gliosis, leukocytic infiltration, and cystic formation) shall be recorded and photographed.

(*2*) *Electron microscopy.* Since the size of the tissue samples that can be examined is very small, at least 3 to 4 tissue blocks from each sampling site must be examined. Tissue sections must be examined with a transmission electron microscope. Three main categories of structural changes must be considered:

(*i*) *Neuronal body.* The shape and position of the nucleus and nucleolus as well as any change in the chromatin patterns shall be noted. Within the neuronal cytoplasm, cytoplasmic organelles such as mitochondria, lysosomes, neurotubules, neurofilaments, microfilaments, endoplasmic reticulum and polyribosomes (Nissl substance), Golgi complex, and secretory granules shall be examined.

(*ii*) *Neuronal processes.* The structural integrity or alterations of dendrites, axons (myelinated and unmyelinated), myelin sheaths, and synapses shall be noted.

(*iii*) *Supporting cells.* Attention must also be paid to the number and structural integrity of the neuroglial elements (oligodendrocytes, astrocytes, and microglia) of the central nervous system, and the Schwann cells, satellite cells, and capsule cells of the peripheral nervous system. Any changes in the endothelial cells and ependymal lining cells shall also be noted whenever possible. The nature, severity, and frequency of each type of lesion in each specimen must be recorded. Representative lesions must be photographed and labeled appropriately.

(e) *Data collection, reporting, and evaluation.* In addition to information meeting the requirements stated under 40 CFR part 792 subpart J, the following specific information shall be reported:

(1) *Description of test system and test methods.* A description of the general design of the experiment shall be provided. This shall include a short justification explaining any decisions where professional judgment is involved such as fixation technique and choice of stains.

(2) *Results.* All observations shall be recorded and arranged by test groups. This data may be presented in the following recommended format:

(i) *Description of signs and lesions for each animal.* For each animal, data must be submitted showing its identification (animal number, treatment, dose, duration), neurologic signs, location(s) nature of, frequency, and severity of lesion(s). A commonly-used scale such as 1+, 2+, 3+, and 4+ for degree of severity ranging from very slight to extensive may be used. Any diagnoses derived from neurologic signs and lesions including naturally occurring diseases or conditions, should also be recorded.

(ii) *Counts and incidence of lesions, by test group.* Data shall be tabulated to show:

(A) The number of animals used in each group, the number of animals displaying specific neurologic signs, and the number of animals in which any lesion was found;

(B) The number of animals affected by each different type of lesion, the average grade of each type of lesion, and the frequency of each different type and/or location of lesion.

(iii) *Evaluation of data.* (A) An evaluation of the data based on gross necropsy findings and microscopic pathology observations shall be made and supplied. The evaluation shall include the relationship, if any, between the animal's exposure to the test substance and the frequency and severity of the lesions observed.

(B) The evaluation of dose-response, if existent, for various groups shall be given, and a description of statistical method must be presented. The evaluation of neuropathology data should include, where applicable, an assessment in conjunction with other neurotoxicity studies performed (eg. electrophysiological, behavioral, neurochemical).

(f) *References.* For additional background information on this test guideline the following references should be consulted:

(1) AFIP. *Manual of Histologic Staining Methods.* (New York: McGraw-Hill (1968).

(2) Chang, L.W. *A Color Atlas and Manual for Applied Histochemistry.* (Springfield, IL: Charles C. Thomas, 1979).

(3) Hayat, M.A. ''Vol. 1. Biological applications,'' *Principles and techniques of electron microscopy.* (New York: Van Nostrand Reinhold, 1970)

(4) Palay S.L., Chan-Palay, V. *Cerebellar Cortex: Cytology and Organization.* (New York: Springer-Verlag, 1974).

(5) Ralis, H.M., Beesley, R.A., Ralis, Z.A. *Techniques in Neurohistology.* (London: Butterworths, 1973).

(6) Spencer, P.S., Schaumburg, H.H. (eds). *Experimental and Clinical Neurotoxicology.* (Baltimore: Williams and Wilkins, 1980).

(7) Zeman, W., JRM Innes, J.R.M. *Craigie's Neuroanatomy of the Rat.* (New York: Academic, 1963).

[50 FR 39397, Sept. 27, 1985, as amended at 52 FR 19082, May 20, 1987]

§ 798.6500 Schedule-controlled operant behavior.

(a) *Purpose.* (1) In the assessment and evaluation of the potential human health effects of substances, it may be necessary to test for functional neurotoxic effects. Substances that have been observed to produce neurotoxic signs in other toxicity studies (e.g. CNS depression or stimulation), as well as substances with a structural similarity to known neurotoxicants should be evaluated for these effects.

(2) This guideline defines procedures for conducting studies of schedule-controlled operant behavior, one way of evaluating functional neurotoxic effects (Dews, 1972 under paragraph (f)(1) of this section; NAS 1975, 1977, 1982 under paragraphs (f)(4), (5) and (6) of this section). Our purpose is to evaluate the effects of acute and repeated exposures on the rate and pattern of responding under schedules of reinforcement. Operant behavior tests may be used to evaluate many other aspects of behavior (Laties, 1978 under paragraph (f)(3) of this section). Additional tests may be necessary to completely assess the behavioral effects of any substance. Behavioral evaluation should be used in conjunction with neuropathologic evaluation and the evaluation of other toxic effects.

(b) *Definitions*—(1) *Neurotoxicity.* Neurotoxicity or a neurotoxic effect is an adverse change in the structure or function of the nervous system following exposure to a chemical agent. Behavioral toxicity is an adverse change in the functioning of the organism with respect to its environment following exposure to a chemical agent.

(2) *Operant, operant behavior, operant conditioning.* An operant is a class of behavioral responses which change or operates on the environment in the same way. Operant behavior is further distinguished as behavior which is modified by its consequences. Operant conditioning is the experimental procedure used to modify some class of behavior by reinforcement or punishment.

(3) *Schedule of reinforcement.* A schedule of reinforcement specifies the relation between behavioral responses and the delivery of reinforcers, such as food or water (Ferster and Skinner, 1957 under paragraph (f)(2) of this section). For example, a fixed ratio (FR) schedule requires a fixed number of responses to produce a reinforcer (e.g. FR 30). On a fixed interval (FI) schedule, the first response after a fixed period of time is reinforced (e.g. FI 5 minutes).

(c) *Principle of the test method.* Experimental animals are trained to perform under a schedule of reinforcement and measurements of their operant behavior are made. Several doses of the test substance are then administered according to the experimental design (between groups or within subjects) and the duration of exposure (acute or repeated). Measurements of the operant

behavior are repeated. A descriptive and statistical evaluation of the data is made to evaluate the nature and extent of any changes in behavior in relation to exposures to the test substance. Comparisons are made between any exposures that influence the behavior and exposures that have neuropathological effects or effects on other targets of the chemical.

(d) *Test procedures*—(1) *Experimental design.* These test procedures may be used to evaluate the behavior of experimental animals receiving either acute or repeated exposures. For acute exposure studies, either within-subject or between groups, experimental designs may be used. For repeated exposure studies, between groups designs should be used, but within subject comparisons (pre-exposure and post-exposure) are recommended and encouraged.

(2) *Animal selection*—(i) *Species.* (A) For most studies, the laboratory mouse or rat is recommended. Standard strains should be used.

(B) Under some circumstances other species may be recommended.

(ii) *Age.* Experimental animals should be young adults. Rats or mice should be at least 14 and 6 weeks old, respectively, prior to exposure.

(iii) *Sex.* (A) Approximately equal numbers of male and female animals are required for each dose level and control group.

(B) Virgin females should be used.

(iv) *Experimental history.* Animals should be experimentally and chemically naive.

(3) *Number of animals.* Six to twelve animals should be exposed to each level of the test substance and/or control procedure. If post exposure effects are examined, a separate group, 6 to 12 additional animals not sacrificed for pathology, will required in subchronic studies.

(4) *Control groups*—(i) *Untreated controls.* A concurrent ''sham'' exposure or vehicle control group or session (according to the design of the study) is required. The subjects should be treated similarly except that administration of the test substance is omitted.

(ii) *Positive controls.* Positive control data is required to demonstrate that the experimental procedures, under the specific conditions in the testing laboratory, are sensitive to substances known to affect operant behavior. Both increases and decreases in response rate should be demonstrated. Data based on acute exposures will be adequate. Data should be collected according to the same experimental design as that proposed for the test substance. Historical data on the procedure collected in the same species and under the same conditions in the testing laboratory may be acceptable, but the presentation of concurrent control data is strongly encouraged since it provides evidence that the test has remained sensitive.

(5) *Dose levels and dose selection.* At least 3 doses, equally spaced over a log scale (e.g., 10, 30, 100), over a range of at least 1 log unit shall be used in addition to a zero dose or vehicle administration. The data should be sufficient to produce a dose-effect curve.

(i) The highest dose shall produce: (A) Clear behavioral effects; or (B) life-threatening toxicity.

(ii) The data from the lower doses must show either: (A) Graded dose-dependent effects at 2 dose levels; or (B) no effects at 2 dose levels, respectively.

(6) *Duration of exposure.* The duration and frequency of exposure will be specified in the test rule.

(7) *Route of Administration.* The route of administration will also be specified in the test rule and will usually be identical to one of the anticipated or actual routes of human exposure. For some chemicals, another route (e.g. parenteral) may be justified. The exposure protocol should conform to that outlined in the appropriate acute or subchronic toxicity study guideline under subpart B or subpart C of this part.

(8) *Study conduct*—(i) *Apparatus.* Behavioral responses and the delivery of reinforcers shall be controlled and monitored by automated equipment located so that its operation does not provide unintended cues or otherwise interfere with the ongoing behavior. Individual chambers should be sound attenuated to prevent disruptions of behavior by external noise. The response manipulanda, feeders, and any stimulus devices should be tested before each session; these devices should periodically be calibrated.

(ii) *Chamber assignment.* Concurrent treatment groups should be balanced across chambers. Each subject should be tested in the chamber to which it is initially assigned.

(iii) *Deprivation and training.* (A) If a nonpreferred positive reinforcer is used, all subjects should be deprived of food until they reach a fixed percentage (e.g. 80 to 90 percent, commonly) of their ad libitum body weight or for a fixed period (e.g., 18 hours) prior to training. Deprivation should be kept constant throughout the study.

(B) Subjects must be trained until they display demonstrable stability in performance across days prior to exposure. One simple and useful criterion is a minimum number of sessions on the schedule and no systematic trend during the 5 days before exposure.

(C) Cumulative records of cumulative responding over time for each animal should be presented to demonstrate that the pattern of responding is representative of that generated by the schedule of reinforcement.

(iv) *Time, frequency, and duration of testing*—(A) *Time of testing.* All experimental animals should be tested at the same time of day and with respect to the time of exposure. For acute studies, testing should be performed when effects are estimated to peak, usually shortly after exposure. For subchronic studies, subjects should be tested prior to daily exposure in order to assess cumulative effects.

(B) *Frequency of testing.* The maintenance of stable operant behavior normally will require regular and frequent (e.g., 5 days a week) testing sessions. Animals should be weighed on each test day.

(C) *Duration of testing.* (*1*) Experimental sessions should be long enough to reasonably see the effects of exposure, but brief enough to be practical. Under most circumstances, a session length of 30–40 minutes should be adequate.

(*2*) If the nature or duration of effects following cessation of repeated exposure are a concern, animals from the high dose group should be tested following exposure for a suitable period of time.

(v) *Schedule selection.* The schedule of reinforcement chosen should generate response rates that may increase or decrease as a function of exposure. Many schedules of reinforcement can do this: a single schedule maintaining a moderate response rate; fixed-interval schedules, which engender a variety of response rates in each interval; or multiple schedules, where different components may maintain high and low response rates.

(e) *Data reporting and evaluation.* In addition to the reporting requirements specified under 40 CFR part 792, subpart J the final test report should contain the following information:

(1) *Description of system, test methods, experimental design, and control data.* (i) A description of the experimental chamber, programming equipment, data collection devices, and environmental conditions.

(ii) A description of the experimental design including counterbalancing procedures, and the stability criterion.

(iii) A description and statistical evaluation of positive control and other control data, including standard measures of central tendency, variability, coefficient of variation of response rates, and the slope of the dose-effect curve.

(2) *Results.* (i) Data for each animal should be arranged by test group in tabular form including the animal identification number, body weight, pre-exposure rate of responding, changes in response rate produced by the chemical, and group data for the same variables, including standard measures of central tendency, variability and coefficient of variation.

(ii) A description and statistical evaluation of the test results: With particular reference to the overall statistical procedures (e.g., parametric or nonparametric) dose-effect curve, and calculation of slope. Presentation of calculations is encouraged.

(f) *References.* For additional background information on this test guideline the following references should be consulted:

(1) Dews, P.B. ''Assessing the Effects of Drugs,'' *Methods in Psychobiology*, Vol. 2, Ed., R.D. Myers (New York: Academic Press, 1972) 83–124.

(2) Ferster, C.B. Skinner, B.F. Schedules of Reinforcement. (New York: Appleton-Century-Crofts, 1957).

(3) Laties, V.G. ''How Operant Conditioning can Contribute to Behavioral Toxicology,'' Environmental Health Perspectives, 28: 29–35 (1978).

(4) National Academy of Science. *Principles for Evaluating Chemicals in the Environment.* (Washington, DC: National Academy of Sciences, 1975).

(5) National Academy of Science. *Principles and Procedures for Evaluating the Toxicity of Household Substances.* (Washington, DC: National Academy of Sciences, 1977).

(6) National Academy of Science. ''Strategies to determine needs and priorities for toxicity testing,'' Appendix 3B. *Reference Protocol Guidelines For Neurobehavioral Toxicity Tests.* 2: 123–129 (1982).

§ 798.6560 Subchronic delayed neurotoxicity of organophosphorus substances.

(a) *Purpose.* In the assessment and evaluation of the toxic characteristics of organophosphorus substances the determination of subchronic delayed neurotoxicity may be carried out, usually after initial information on delayed neurotoxicity has been obtained by acute testing or by the demonstration of inhibition and aging of neurotoxic esterase in hen neural tissue. The subchronic delayed neurotoxicity test provides information on possible health hazards likely to arise from repeated exposures over a limited period of time. It will provide information on dose response and can provide an estimate of a non-effect level which can be of use for establishing safety criteria for exposure.

(b) *Definitions.* Subchronic delayed neurotoxicity is a prolonged, delayed-onset locomoter ataxia resulting from repeated daily administration of the test substance.

(c) *Principle of the test method.* Multiple dose levels of the test substance are administered orally to domestic hens (*Gallus gallus domesticus*) for 90 days. The animals are observed at least daily for behavioral abnormalities, locomotor ataxia and paralysis. Histopathological examination of selected neural tissues is undertaken at the termination of the test period.

(d) *Test procedures*—(1) *Animal selection.* The adult domestic laying hen, aged 8 to 14 months, is recommended. Standard size breeds and strains should be employed.

(2) *Number of animals.* Ten hens should be used for each treatment and control group.

(3) *Control group*—(i) *General.* A concurrent control group should be used. This group should be treated in a manner identical to the treated group, except that administration of the test substance is omitted.

(ii) *Reference substances.* If a positive control is used, a substance which is known to produce delayed neurotoxicity should be employed. Examples of such substances are triorthocresyl phosphate (TOCP) and leptophos.

(4) *Housing and feeding conditions.* Cages or enclosures which are large enough to permit free mobility of the hens and easy observation of gait should be used. Where the lighting is artificial, the sequence should be 12 hours light, 12 hours dark. Appropriate diets should be administered as well as an unlimited supply of drinking water.

(5) *Dose levels.* At least three dose levels should be used in addition to the control group(s). The highest dose level should result in toxic effects, preferably delayed neurotoxicity, but not produce an incidence of fatalities which would prevent a meaningful evaluation. The lowest dose level should not produce any evidence of toxicity.

(6) *Route of administration.* Oral dosing each day for at least 5 days per week should be carried out, preferably by gavage or administration of gelatine capsules.

(7) *Study conduct*—(i) *General.* Healthy young adult hens free from interfering viral diseases and medication and without abnormalities of gait should be acclimatized to the laboratory conditions for at least 5 days prior to randomization and assignment to treatment and control groups. The test or control substance should be administered and observations begun. All hens should be carefully observed at least once daily throughout the test period. Signs of toxicity should be recorded, including the time of onset, degree and duration. Observations should

include, but not be limited to, behavioral abnormality, locomotor ataxia and paralysis. At least once a week the hens should be taken outside the cages and subjected to a period of forced motor activity, such as ladder climbing, in order to enhance the observation of minimal responses. The hens should be weighed weekly. Any moribund hens should be removed and sacrificed.

(ii) *Pathology*—(A) *Gross necropsy*. In the presence of clinical signs of delayed neurotoxicity useful information may be provided by gross necropsy.

(B) *Histopathology*. Tissues from all animals should be fixed *in situ*, using perfusion techniques. Sections should include medulla oblongata, spinal cord and peripheral nerves. The spinal cord sections should be taken from the upper cervical bulb, the mid-thoracic and lumbosacral regions. Sections of the proximal region of the tibial nerve and its branches and of the sciatic nerve should be taken. Sections should be stained with appropriate myelin and axon-specific stains. Microscopic examination should be carried out on all hens in the control and high-dose groups. Microscopic examination should also be carried out on hens in the low and intermediate dose groups when there is evidence of effects in the high-dose group.

(e) *Data reporting and evaluation*—(1) *Test report*. In addition to the reporting requirements specified under 40 CFR part 792, subpart J the final test report must include the following information:

(i) Toxic response data by group with a description of clinical manifestations of nervous system damage; where a grading system is used the criteria should be defined.

(ii) For each animal, time of death during the study or whether it survived to termination.

(iii) The day of observation of each abnormal sign and its subsequent course.

(iv) Body weight data.

(v) Necropsy findings for each animal, when performed.

(vi) A detailed description of all histopathological findings.

(vii) Statistical treatment of results, where appropriate.

(2) *Treatment of results*. (i) Data may be summarized in tabular form, showing for each test group the number of animals at the start of the test, the number of animals showing lesions or effects, the types of lesions or effects and the percentage of animals displaying each type of lesion or effect.

(ii) All observed results should be evaluated by an appropriate statistical method. Any generally accepted statistical method may be used; the statistical methods should be selected during the design of the study.

(3) *Evaluation of results*. The findings of a subchronic delayed neurotoxicity study should be evaluated in conjunction with the findings of preceding studies and considered in terms of the incidence and severity of observed neurotoxic effects and any other observed effects and histopathological findings in the treated and control groups. A properly conducted subchronic test should provide a satisfactory estimation of a no-effect level based on lack of clinical signs and histopathological changes.

(f) *References*. For additional background information on this test guideline the following references should be consulted:

(1) Abou-Donia, M.B. ''Organophosphorus ester-induced delayed neurotoxicity'' Annual Review of Pharmacology and Toxicology, 21:511–548 (1981).

(2) Abou-Donia, M.B., Pressing, S.H. ''Delayed neurotoxicity from continuous low-dose oral administration of leptophos to hens.'' *Toxicology and Applied Pharmacology*, 38:595–608 (1976).

(3) Baron, R.L. (ed). ''Pesticide Induced Delayed Neurotoxicity,'' Proceedings of a Conference, February 19–20, 1976, Washington, DC. U.S. Environmental Protection Agency. EPA Report No. 600/1–76–025, Washington, DC (1976).

(4) Cavanaugh, J.B. ''Peripheral neuropathy caused by chemical agents'' *Critical Reviews of Toxicity*, 2:365–417 CRC Press, Inc. (1973).

(5) Johannsen, F.R., Wright, P.L., Gordon, D.E., Levinskas, G.L., Radue, R.W., Graham, P.R. ''Evaluation of delayed neurotoxicity and dose-response relationship of phosphate esters in the

adult hen,'' *Toxicology and Applied Pharmacology,* 41:291–304 (1977).

(6) Johnson, M.K. ''Organophosphorus esters causing delayed neurotoxic effects: mechanism of action and structure/activity studies,'' *Archives of Toxicology,* 34:259–288 (1975).

PART 799—IDENTIFICATION OF SPECIFIC CHEMICAL SUBSTANCE AND MIXTURE TESTING REQUIREMENTS

Subpart A—General Provisions

Sec.
799.1 Scope and purpose.
799.2 Applicability.
799.3 Definitions.
799.5 Submission of information.
799.10 Test standards.
799.11 Availability of test guidelines.
799.12 Test results.
799.17 Effects of non-compliance.
799.18 Chemicals subject of test rules or consent orders for which the testing reimbursement period has passed.
799.19 Chemical imports and exports.

Subpart B—Specific Chemical Test Rules

799.1053 Trichlorobenzenes.
799.1560 Diethylene glycol butyl ether and diethylene glycol butyl ether acetate.
799.1575 Diethylenetriamine (DETA).
799.1645 2-Ethylhexanol.
799.1700 Fluoroalkenes.
799.2155 Commercial hexane.
799.2325 Isopropanol.
799.2475 2-Mercaptobenzothiazole.
799.2700 Methyl ethyl ketoxime.
799.3300 Unsubstituted phenylenediamines.
799.4360 Tributyl phosphate.
799.4440 Triethylene glycol monomethyl ether.

Subpart C—Testing Consent Orders

799.5000 Testing consent orders for substances and mixtures with Chemical Abstract Service Registry Numbers.
799.5025 Testing consent orders for mixtures without Chemical Abstracts Service Registry Numbers.

Subpart D—Multichemical Test Rules

799.5055 Hazardous waste constituents subject to testing.
799.5075 Drinking water contaminants subject to testing.
799.5085 Chemical testing requirements for certain high production volume chemicals.
799.5115 Chemical testing requirements for certain chemicals of interest to the Occupational Safety and Health Administration.

Subpart E—Product Properties Test Guidelines

799.6755 TSCA partition coefficient (*n*-octanol/water), shake flask method.
799.6756 TSCA partition coefficient (*n*-octanol/water), generator column method.
799.6784 TSCA water solubility: Column elution method; shake flask method.
799.6786 TSCA water solubility: Generator column method.

Subparts F–G [Reserved]

Subpart H—Health Effects Test Guidelines

799.9110 TSCA acute oral toxicity.
799.9120 TSCA acute dermal toxicity.
799.9130 TSCA acute inhalation toxicity.
799.9135 TSCA acute inhalation toxicity with histopathology.
799.9305 TSCA Repeated dose 28–day oral toxicity study in rodents.
799.9310 TSCA 90-day oral toxicity in rodents.
799.9325 TSCA 90-day dermal toxicity.
799.9346 TSCA 90-day inhalation toxicity.
799.9355 TSCA reproduction/developmental toxicity screening test.
799.9365 TSCA combined repeated dose toxicity study with the reproduction/developmental toxicity screening test.
799.9370 TSCA prenatal developmental toxicity.
799.9380 TSCA reproduction and fertility effects.
799.9410 TSCA chronic toxicity.
799.9420 TSCA carcinogenicity.
799.9430 TSCA combined chronic toxicity/carcinogenicity.
799.9510 TSCA bacterial reverse mutation test.
799.9530 TSCA in vitro mammalian cell gene mutation test.
799.9537 TSCA in vitro mammalian chromosome aberration test.
799.9538 TSCA mammalian bone marrow chromosomal aberration test.
799.9539 TSCA mammalian erythrocyte micronucleus test.
799.9620 TSCA neurotoxicity screening battery.
799.9630 TSCA developmental neurotoxicity.
799.9748 TSCA metabolism and pharmacokinetics.
799.9780 TSCA immunotoxicity.

AUTHORITY: 15 U.S.C. 2603, 2611, 2625.

SOURCE: 49 FR 39817, Oct. 10, 1984, unless otherwise noted.

Subpart A—General Provisions

§ 799.1 Scope and purpose.

(a) This part identifies the chemical substances, mixtures, and categories of substances and mixtures for which data are to be developed, specifies the persons required to test (manufacturers, including importers, and/or processors), specifies the test substance(s) in each case, prescribes the tests that are required including the test standards, and provides deadlines for the submission of reports and data to EPA.

(b) This part requires manufacturers and/or processors of chemical substances or mixtures (''chemicals'') identified in subpart B to submit letters of intent to test, exemption applications, and study plans in accordance with EPA test rule development and exemption procedures contained in part 790 of this chapter and any modifications to such procedures contained in this part.

(c) This part requires manufacturers and/or processors of chemicals identified in subpart B to conduct tests and submit data in accordance with the test standards contained in this part in order to develop data on the health and environmental effects and other characteristics of these chemicals. These data will be used to assess the risk of injury to human health or the environment presented by these chemicals.

(d) This part contains certain TSCA test guidelines which are cross-referenced in the test rules contained in this part.

[49 FR 39817, Oct. 10, 1984, as amended at 62 FR 43824, Aug. 15, 1997]

§ 799.2 Applicability.

This part is applicable to each person who manufactures or intends to manufacture (including import) and/or to each person who processes or intends to process a chemical substance or mixture identified in subpart B for testing during the period commencing with the effective date of the specific chemical test rule until the end of the reimbursement period. Each set of testing requirements in subpart B specifies whether those requirements apply to manufacturers only, to processors only, or to both manufacturers and processors.

§ 799.3 Definitions.

The definitions in section 3 of the Toxic Substances Control Act (TSCA) and the definitions of § 790.3 of this chapter apply to this part.

§ 799.5 Submission of information.

Information (letters, study plans, reports) submitted to EPA under this part must bear the Code of Federal Regulations section number of the subject chemical test rule (e.g., § 799.1285 for Cumene) and must be addressed to the Document Control Office (DCO) (7407M), Office of Pollution Prevention and Toxics (OPPT), Environmental Protection Agency, 1200 Pennsylvania Ave., NW., Washington, DC 20460–0001.

[60 FR 34467, July 3, 1995, as amended at 71 FR 33642, June 12, 2006]

§ 799.10 Test standards.

Testing required under subpart B must be performed using a study plan prepared according to the requirements of parts 790 and 792 of this chapter unless modified in specific chemical test rules in subpart B. All raw data, documentation, records, protocols, specimens and reports generated as a result of a study under subpart B must be developed, reported, and retained in accordance with TSCA Good Laboratory Practice Standards (GLP's) in part 792 of this chapter. These items must be made available during an inspection or submitted to EPA upon request by EPA or its authorized representative. Laboratories conducting testing for submission to the Agency in response to a test rule promulgated under section 4 of TSCA must adhere to the TSCA GLP's. Sponsors must notify the laboratory that the study is being conducted pursuant to TSCA section 4. Sponsors are also responsible for ensuring that laboratories conducting the test abide by the TSCA GLP standards. In accordance with § 792.12 of this chapter, a certification concerning adherence to the TSCA GLP's must be submitted to EPA.

§ 799.11 Availability of test guidelines.

(a) The TSCA and FIFRA guidelines for the various study plans are available from the National Technical Information Service (NTIS). Address and telephone number: National Technical Information Service, 5285 Port Royal Road, Springfield, VA 22161 (703–487–4650).

(b) The OECD guidelines for the various study plans are available from the following address: OECD Publication and Information Center, 1750 Pennsylvania Ave., NW., Washington, DC 20006 (202–724–1857).

§ 799.12 Test results.

Except as set forth in specific chemical test rules in subpart B of this part, a positive or negative test result in any of the tests required under subpart B is defined in the TSCA test guidelines published by NTIS.

§ 799.17 Effects of non-compliance.

Any person who fails or refuses to comply with any aspect of this part or part 790 is in violation of section 15 of TSCA. EPA will treat violations of Good Laboratory Practice Standards as indicated in § 792.17 of this chapter.

§ 799.18 Chemicals subject of test rules or consent orders for which the testing reimbursement period has passed.

The following table lists substances and mixtures that have been the subjects of section 4 testing actions and for which the testing reimbursement period has terminated (sunset). The FEDERAL REGISTER citation in the table is for the final rule/consent order that includes the particular substance for which the sunset date listed in the table below applies. Section 12(b) export notification is no longer required for these substances and mixtures. Substances that are the subjects of two or more section 4 testing actions may have section 4 reimbursement or section 12(b) export notification requirements that have not sunset; see subparts B, C, and D of this part to determine if certain other section 4 testing requirements apply. Additionally, section 12(b) export notification may also be triggered by proposed or final action under TSCA section 5, 6, or 7 (in addition to final actions under section 4); see 40 CFR part 707, subpart D for further information regarding the TSCA section 12(b) export notification requirements.

CAS No.	Chemical Name	FR cite	Sunset dates
	C-9 Aromatic Hydrocarbon Fraction[1]	50 FR 20662, 5/17/85	Aug 13, 1994
62–53–3	Aniline	53 FR 31804, 8/19/88	July 27, 1994
71–55–6	1,1,1-Trichloroethane	49 FR 39810, 10/10/84	June 29, 1992
75–56–9	Propylene oxide	50 FR 48762, 11/27/85	Dec,21, 1992
78–87–5	1,2-Dichloropropane	52 FR 37138, 10/5/87	April 17, 1995
79–94–7	Tetrabromobisphenol-A	52 FR 25219, 7/6/87	Aug 24, 1994
80–05–7	Bisphenol A	51 FR 33047, 9/18/86	April 6, 1993
84–65–1	Anthraquinone	52 FR 21018, 6/4/87	Aug 21, 1994
87–61–6	1,2,3-trichlorobenzene	51 FR 11728,4/7/86	Nov 13, 1993
88–74–4	2-nitroaniline	53 FR 31804, 8/19/88	Sept 19, 1994
92–52–4	1,1-Biphenyl	50 FR 37182, 9/12/85	March 15, 1994
95–48–7	Ortho-cresols AKA 2-methylphenol	51 FR 15771, 4/28/86	Dec. 6, 1994
95–50–1	1,2-dichlorobenzene	51 FR 24657, 7/8/86	April 27, 1994
95–51–2	2-chloroaniline	53 FR 31804, 8/19/88	Sept 6, 1994
95–76–1	3,4-dichloroaniline	53 FR 31804, 8/19/88	Oct 2, 1994
95–94–3	1,2,4,5-tetrachlorobenzene	51 FR 24657,7/8/86	April 27, 1994
97–02–9	2,4-dinitroaniline	53 FR 31804, 8/19/88	Oct 19, 1993
98–82–8	Cumene	53 FR 28195, 7/27/88	March 11, 1995
99–30–9	2,6-dichloro-4-nitroaniline	53 FR 31804, 8/19/88	Aug 6, 1994
100–01–6	4-nitroaniline	53 FR 31804, 8/19/88	Sept 19, 1994
106–44–5	Para-cresols AKA 4-methylphenol	51 FR 15771, 4/28/86	Dec. 6, 1994
106–46–7	1,4-dichlorobenzene	51 FR 24657, 7/8/86	Jan 22, 1994
106–47–8	4-chloroaniline	53 FR 31804, 8/19/88	Oct 19, 1993
108–39–4	Meta-cresols AKA 3-methylphenol	51 FR 15771, 4/28/86	Dec. 6, 1994
108–90–7	Monochlorobenzene	51 FR 24657, 7/8/86	Nov 13, 1991
112–90–3	Oleylamine	52 FR 31962, 8/24/87	Nov 28, 1994
116–14–3	Tetrafluoroethene	52 FR 21516, 6/8/87	May 19, 1993
116–15–4	Hexafluoropropene	52 FR 21516, 6/8/87	Jan 22, 1994
123–31–9	Hydroquinone	50 FR 53145, 12/30/85	Dec. 11, 1994
149–57–5	2-Ethylhexanoic Acid	51 FR 40318, 11/6/86	June 19, 1993
328–84–7	3,4-Dichlorobenzotrifluoride	52 FR 23547, 6/23/87	Dec. 5, 1993

CAS No.	Chemical Name	FR cite	Sunset dates
25550–98–5	Diisodecyl Phenyl Phosphite	54 FR 8112, 2/24/89	May 21, 1995

[1] Only substances obtained from the reforming of crude petroleum.

[60 FR 31923, June 19, 1995]

§ 799.19 Chemical imports and exports.

Persons who export or who intend to export chemical substances or mixtures listed in subpart B, subpart C, or subpart D of this part are subject to the requirements of 40 CFR part 707.

[71 FR 66245, Nov. 14, 2006]

Subpart B—Specific Chemical Test Rules

§ 799.1053 Trichlorobenzenes.

(a) *Identification of testing substance.* (1) 1,2,3- and 1,2,4-trichlorobenzenes, CAS Numbers 87–61–6 and 120–82–1 respectively, shall be tested in accordance with this section.

(2) The substances identified in paragraph (a)(1) of this section shall be 99 percent pure and shall be used as the test substances in each of the tests specified.

(3) For health effects testing required under paragraph (e) of this section, the test substance shall not contain more than 0.05 percent benzene and 0.05 percent hexachlorobenzene.

(b) *Persons required to submit study plans, conduct tests, and submit data.* (1) All persons who manufacture or process substances identified in paragraph (a)(1) of this section, other than an impurity, from May 21, 1986, to the end of the reimbursement period, shall submit a letter of intent to test or exemption applications and shall conduct tests, in accordance with part 792 of this chapter, and submit data as specified in this section, subpart A of this part and part 790 of this chapter for two-phase rulemaking.

(2) Persons subject to this section are not subject to the requirements of § 790.50(a) (2), (5), (6) and (b) and § 790.87(a)(1)(ii) of this chapter.

(3) Persons who notify EPA of their intent to conduct tests in compliance with the requirements of this section must submit plans for those tests no later than 30 days before the initiation of each of those tests.

(4) In addition to the requirements of § 790.87(a)(2) and (3) of this chapter, EPA will conditionally approve exemption applications for this rule if EPA has received a letter of intent to conduct the testing from which exemption is sought and EPA has adopted test standards and schedules in a final Phase II test rule.

(5) For health effects testing required under paragraph (e) of this section, all persons who manufacture (import) or process 1,2,4-trichlorobenzene, other than as an impurity, after the effective date of this rule (August 21, 1986) to the end of the reimbursement period shall submit letters of intent to conduct testing or exemption applications, submit study plans, conduct tests, and submit data as specified in this section, subpart A of this part, and parts 790 and 792 of this chapter for single-phase rulemaking.

(c) [Reserved]

(d) *Environmental effects testing.* 1,2,3- and 1,2,4-trichlorobenzenes shall be tested in accordance with this section.

(1) *Marine invertebrate acute toxicity testing*—(i) *Required testing.* Testing using measured concentrations, flow through or static renewal systems, and systems that control for evaporation of the test substance, shall be conducted for 1,2,3- and 1,2,4-trichlorobenzenes. Testing shall be conducted with mysid shrimp (*Mysidopis bahia*) to develop data on the acute toxicity of the above chlorobenzene isomers to marine invertebrates.

(ii) *Test standards.* The marine invertebrate (mysid shrimp, *Mysidopis bahia*) acute toxicity testing for 1,2,3- and 1,2,4-trichlorobenzenes shall be conducted in accordance with § 797.1930 of this chapter.

(iii) *Reporting requirements.* (A) The acute toxicity tests on marine invertebrates shall be completed and the final report submitted to EPA within 1 year

of the effective date of the final Phase II test rule.

(B) An interim progress report shall be submitted to the Agency within 6 months after the effective date of the final Phase II rule.

(2) *Marine fish acute toxicity testing*—(i) *Required testing.* Testing using measured concentrations, flow through systems, and systems that control for evaporation of the test substance shall be conducted for 1,2,3-trichlorobenzene. Testing shall be conducted with Silversides (*Menidia menidia*) to develop data on the acute toxicity of 1,2,3-trichlorobenzene to saltwater fish.

(ii) *Test standard.* The marine fish (silverside minnow, *Menida menidia*) acute toxicity test shall be conducted for 1,2,3-trichlorobenzene in accordance with § 797.1400 of this chapter.

(iii) *Reporting requirements.* (A) The marine fish (silversides minnow, *Menidia menidia*) acute toxicity test shall be completed and the final results submitted within 1 year of the effective date of the Phase II final test rule.

(B) An interim progress report shall be submitted to EPA 6 months after the effective date of the final Phase II rule.

(3) *Freshwater fish acute toxicity testing*—(i) *Required testing.* Testing using measured concentrations, flow through systems, and systems that control evaporation of the test substance shall be conducted for 1,2,3-trichlorobenzene. A 96-hour LC50 test shall be conducted with the fathead minnow (*Pimephales promelas*) to develop data on the acute toxicity of 1,2,3-trichlorobenzene to freshwater fish.

(ii) *Test standard.* The freshwater fish (fathead minnow, *Pimephales promelas*) acute toxicity test shall be conducted for 1,2,3-trichlorobenzene in accordance with § 797.1400 of this chapter.

(iii) *Reporting requirements.* (A) The freshwater fish acute toxicity study shall be completed and the final report submitted to EPA within 1 year of the effective date of the final Phase II test rule.

(B) An interim progress report shall be submitted to EPA 6 months after the effective date of the final Phase II rule.

(4) *Freshwater invertebrate acute toxicity testing*—(i) *Required testing.* Testing using measured concentrations, flow through or static renewal systems, and systems that control for evaporation of the test substance shall be conducted for 1,2,3-trichlorobenzene. A 96-hour EC50 shall be conducted for one species of *Grammarus* to develop data on the acute toxicity of 1,2,3-trichlorobenzene to aquatic freshwater invertebrates.

(ii) *Test standard.* The freshwater invertebrate (Gammarus sp.) acute toxicity test shall be conducted for 1,2,3-trichlorobenzene in accordance with § 795.120 of this chapter.

(iii) *Reporting requirements.* (A) The freshwater invertebrate acute toxicity test shall be completed and the final report submitted to EPA within 411 days of the effective date of the final Phase II rule.

(B) An interim progress report shall be submitted to EPA 6 months after the effective date of the final Phase II rule.

(5) *Mysid shrimp chronic toxicity testing*—(i) *Required testing.* Testing using measured concentrations, flow through or static renewal systems, and systems that control for evaporation of the test substance shall be conducted for 1,2,4-trichlorobenzene. Testing shall be conducted with mysid shrimp (*Mysidopsis bahia*) to develop data on the chronic toxicity of 1,2,3-trichlorobenzene, should the acute LC50 of this chemical to mysid shrimp be determined to be less than 1 ppm.

(ii) *Test standards.* The mysid shrimp (*Mysidopis bahia*) chronic toxicity test shall be conducted for 1,2,4-trichlorobenzene in accordance with § 797.1950 of this chapter. Testing shall also be conducted according to § 797.1950 for 1,2,3-trichlorobenzene should the results of testing required by (d)(1)(ii) of this section yield an acute LC50 for this chemical substance of less than 1 ppm.

(iii) *Reporting requirements.* (A) The mysid shrimp chronic toxicity test for 1,2,4-trichlorobenzene shall be completed and the final report submitted to EPA within 1 year of the effective date of the final Phase II rule. The mysid shrimp chronic toxicity test for 1,2,3-trichlorobenzene, (required if the LC50 is less than 1 ppm), shall be completed and final report submitted to

EPA within 15 months of the effective date of the final Phase II rule.

(B) Progress reports shall be submitted to EPA at 6-month intervals, beginning 6 months after of the effective date of the final Phase II rule and until the final report is submitted to EPA.

(e) *Health effects testing*—(1) *Oncogenicity*—(i) *Required testing.* (A) A test for oncogenic effects shall be conducted with 1,2,4-TCB in accordance with § 798.3300 of this chapter.

(B) The route of administration for the oncogenicity testing for 1,2,4-TCB shall be via the animal feed.

(C) Two rodent species shall be used and one shall be the Fischer-344 rat.

(ii) *Reporting requirements.* (A) The oncogenicity test shall be completed and the final results submitted to EPA by June 30, 1994.

(B) Progress reports shall be submitted to the Agency every 6 months after the effective date of the final rule.

(2) [Reserved]

(f) [Reserved]

(g) *Effective date.* (1) The effective date of the final phase II rule is August 14, 1987, except for paragraphs (d)(4)(iii)(A) and (e)(1)(ii)(A) of this section. The effective date for paragraph (d)(4)(iii)(A) of this section is March 1, 1990. The effective date for paragraph (e)(1)(ii)(A) of this section is June 12, 1992.

(2) The guidelines and other test methods cited in this rule are referenced as they exist on the effective date of the final rule.

[51 FR 11737, Apr. 7, 1986; 51 FR 18444, May 20, 1986, as amended at 51 FR 24667, July 8, 1986; 52 FR 24465, July 1, 1987; 55 FR 7327, Mar. 1, 1990; 57 FR 24960, June 12, 1992; 57 FR 27845, June 22, 1992; 58 FR 34205, June 23, 1993]

§ 799.1560 Diethylene glycol butyl ether and diethylene glycol butyl ether acetate.

(a) *Identification of test substances.* (1) Diethylene glycol butyl ether (DGBE), CAS Number 112–34–5, and diethylene glycol butyl ether acetate (DGBA), CAS Number 124–17–4, shall be tested in accordance with this section.

(2) DGBE of at least 95 percent purity and DGBA of at least 95 percent purity shall be used as the test substances.

(b) *Persons required to submit study plans, conduct tests, and submit data.* All persons who manufacture (including import) or process or intend to manufacture or process DGBE and/or DGBA, other than as an impurity, after April 11, 1988, to the end of the reimbursement period shall submit letters of intent to conduct testing, submit study plans and conduct tests, and submit data, or submit exemption applications as specified in this section, subpart A of this part, and parts 790 and 792 of this chapter for single-phase rulemaking. Persons who manufacture or process DGBE are subject to the requirements to test DGBE in this section. Only persons who manufacture or process DGBA are subject to the requirements to test DGBA in this section.

(c) *Health effects testing*—(1) *Subchronic toxicity*—(i) *Required testing.* (A) A 90-day subchronic toxicity test of DGBE shall be conducted in rats by dermal application in accordance with § 798.2250 of this chapter except for the provisions in paragraphs (e)(9)(iv), (10)(i)(A) and (ii)(B), (11) (ii) and (iii), and (12)(i) of § 798.2250.

(B) For the purpose of this section, the following provisions also apply:

(*1*) A satellite group to evaluate fertility shall be established. Control males shall be cohabited with control females, and males and females administered the high dose shall be cohabited. Endpoints to be evaluated shall include percent mated; percent pregnant; length of gestation; litter size; viability at birth, on Day 4, and weaning, on Day 21; sex of the offspring; and litter weights at birth and Days 4, 7, 14, and 21. Litters shall be standardized on day 4 in accordance with the reproductive and fertility effects guideline, § 798.4700(c)(6)(iv) of this chapter. Gross examinations shall be made at least once each day and physical or behavioral anomalies in the dam or offspring shall be recorded. At weaning, dams shall be sacrificed and examined for resorption sites indicative of post-implantation loss. An additional 20 males and 40 females will have to be added to the subchronic study for this test. If the animals in the high dose group exhibit marked toxicity (e.g. greater than 20 percent

weight loss), then the fertility tests shall be conducted in the next highest dose group.

(*2*) Cage-side observations shall include, but not be limited to, changes in skin and fur; eyes and mucous membranes; respiratory, circulatory autonomic, and central nervous systems; somatomotor activity; and behavior pattern. In addition a daily examination for hematuria shall be done.

(*3*) Certain hematology determinations shall be carried out at least three times during the test period: Just prior to initiation of dosing (baseline data), after approximately 30 days on test, and just prior to terminal sacrifice at the end of the test period. Hematology determinations which are appropriate to all studies: Hematocrit, hemoglobin concentration, erythrocyte count, total and differential leucocyte count, mean corpuscular volume, and a platelet count.

(*4*) Urinalyses shall be done at least three times during the test period: Just prior to initiation of dosing (baseline data), after approximately 30 days into the test, and just prior to terminal sacrifice at the end of the test period. The animals shall be kept in metabolism cages, and the urine shall be examined microscopically for the presence of erythrocytes and renal tubular cells, in addition to measurement of urine volume, specific gravity, glucose, protein/albumin, and blood.

(*5*) The liver, kidney, adrenals, brain, gonads, prostate gland, epididymides, seminal vesicles, and pituitary gland shall be weighed wet, as soon as possible after dissection, to avoid drying.

(*6*) The following organs and tissues, or representative samples thereof, shall be preserved in a suitable medium for possible future histopathological examination: All gross lesions; lungs—which should be removed intact, weighed, and treated with a suitable fixative to ensure that lung structure is maintained (perfusion with the fixative is considered to be an effective procedure); nasopharyngeal tissues; brain—including sections of medulla/pons, cerebellar cortex, and cerebral cortex; pituitary; thyroid/parathyroid; thymus; trachea; heart; sternum with bone marrow; salivary glands; liver; spleen; kidneys; adrenals; pancreas; gonads; uterus; oviducts; vagina; vas deferens; accessory genital organs (epididymis, prostate, and, if present, seminal vesicles); aorta; (skin); gall bladder (if present); esophagus; stomach; duodenum; jejunum; ileum; cecum; colon; rectum; urinary bladder; representative lymph node; (mammary gland); (thigh musculature); peripheral nerve; (eyes); (femur—including articular surface); (spinal cord at three levels—cervical, midthoracic, and lumbar); and (zymbal and exorbital lachrymal glands).

(*7*) (*i*) Full histopathology on normal and treated skin and on organs and tissues listed in paragraph (c)(1)(i)(B)(*6*) of this section, as well as the accessory genital organs (epididymides, prostate, seminal vesicles) and the vagina, of all animals in the control and high dose groups.

(*ii*) The integrity of the various cell stages of spermatogenesis shall be determined, with particular attention directed toward achieving optimal quality in the fixation and embedding; preparations of testicular and associated reproductive organ samples for histology should follow the recommendations of Lamb and Chapin (1985) under paragraph (d)(1) of this section, or an equivalent procedure. Histological analyses shall include evaluations of the spermatogenic cycle, i.e., the presence and integrity of the 14 cell stages. These evaluations should follow the guidance provided by Clermont and Perey (1957) under paragraph (d)(2) of this section. Information shall also be provided regarding the nature and level of lesions observed in control animals for comparative purposes.

(*iii*) Data on female cyclicity shall be obtained by performing vaginal cytology over the last 2 weeks of dosing; the cell staging technique of Sadleir (1978) and the vaginal smear method in Hafez (1970) under paragraphs (d) (3) and (7) of this section or equivalent methods should be used. Data should be provided on whether the animal is cycling and the cycle length.

(*iv*) The ovary shall be serially sectioned with a sufficient number of sections examined to adequately detail oocyte and follicular morphology. The methods of Mattison and Thorgiersson (1979) and Pederson and Peters (1968) under paragraphs (d) (4) and (5) of this

section may provide guidance. The strategy for sectioning and evaluation is left to the discretion of the investigator, but shall be described in detail in the study plan and final report. The nature and background level of lesions in control tissue shall also be noted.

(ii) *Reporting requirements.* (A) The subchronic test shall be completed and the final report submitted to EPA within 15 months of the effective date of the final test rule.

(B) Progress reports shall be submitted to EPA every 6 months, beginning 6 months from the effective date of the final rule until submission of the final report to EPA.

(2) *Neurotoxicity/behavioral effects*—(i) *Required testing*—(A) (*1*) *Functional observational battery.* A functional observational battery shall be performed in the rat by dermal application of DGBE for a period of 90 days according to §798.6050 of this chapter except for the provisions in paragraphs (b)(1), (d)(4)(ii), (5), and (8)(ii)(E) of §798.6050.

(*2*) For the purpose of this section, the following provisions also apply:

(*i*) *Definition.* Neurotoxicity is any adverse acute and/or lasting effect on the structure or function of the central and/or peripheral nervous system related to exposure to a chemical substance.

(*ii*) *Lower doses.* The data from the lower doses shall show either graded dose-dependent effects in at least two of all the doses tested including the highest dose, or no neurotoxic (behavioral) effects at any dose tested.

(*iii*) *Duration and frequency of exposure.* Animals shall be exposed for 6 hours/day, 5 days/week for a 90-day period.

(*iv*) *Sensory function.* A simple assessment of sensory function (vision, audition, pain perception) shall be made. Marshall et al. (1971) in §798.6050(f)(8) of this chapter have described a neurologic exam for this purpose; these procedures are also discussed by Deuel (1977), under §798.6050(f)(4) of this chapter. Irwin (1968) under §798.6050(f)(7) of this chapter described a number of reflex tests intended to detect gross sensory deficits. Many procedures have been developed for assessing pain perception (e.g., Ankier (1974) under §798.6050(f)(1); D'Amour and Smith (1941) under §798.6050(f)(3); and Evans (1971) under §798.6050(f)(6) of this chapter.

(B)(*1*) *Motor activity.* A motor activity test shall be conducted in the rat by dermal application of DGBE for a period of 90 days according to §798.6200 of this chapter except for the provisions in paragraphs (c), (d)(3)(ii), (4)(ii), (5), (8)(i), and (iii) of §798.6200.

(*2*) For the purpose of this section, the following provisions also apply:

(*i*) *Principle of the test method.* The test substance is administered to several groups of experimental animals, one dose being used per group. Measurements of motor activity are made. Where possible, the exposure levels at which significant changes in motor activity are produced are compared to those levels which produce toxic effects not originating in the central and/or peripheral nervous system.

(*ii*) *Positive control data.* Positive control data are required to document the sensitivity of the activity measuring device and testing procedure. These data should demonstrate the ability to detect increases or decreases in activity and to generate a dose-effect curve or its equivalent using three values of the dose or equivalent independent variable. A single administration of the dose (or equivalent) is sufficient. It is recommended that chemical exposure be used to collect positive control data. Positive control data shall be collected at the time of the test study unless the laboratory can demonstrate the adequacy of historical data for this purpose.

(*iii*) *Lower doses.* The data from the lower doses shall show either graded dose-dependent effects in at least two of all the doses tested including the highest dose, or no neurotoxic (behavioral) effects at any dose tested.

(*iv*) *Duration and frequency of exposure.* Animals shall be exposed for 6 hours/day, 5 days/week for a 90-day period.

(*v*) *General.* Motor activity shall be monitored by an automated activity recording apparatus. The device used shall be capable of detecting both increases and decreases in activity, i.e. baseline activity as measured by the

device shall not be so low as to preclude decreases nor so high as to preclude increases. Each device shall be tested by a standard procedure to ensure, to the extent possible, reliability of operation across devices and across days for any one device. In addition, treatment groups shall be balanced across devices. Each animal shall be tested individually. The test session shall be long enough for motor activity to approach asymptotic levels by the last 20 percent of the session for most treatments and for the session control animals. All sessions should be of the same duration. Treatment groups shall be counter-balanced across test times. Effort should be made to ensure that variations in the test conditions are minimal and are not systematically related to treatment. Among the variables which can affect motor activity are sound level, size and shape of the test cage, temperature, relative humidity, lighting conditions, odors, use of home cage or novel test cage, and environmental distractions. Tests shall be executed by an appropriately trained individual.

(*vi*) *Subchronic.* All animals shall be tested prior to initiation of exposure and at 30 ±4, 60 ±4, and 90 ±4 days during the exposure period. Testing shall occur prior to the daily exposure. Animals shall be weighed on each test day and at least once weekly during the exposure period.

(C)(*1*) *Neuropathology.* A neuropathology test shall be conducted in the rat by dermal application of DGBE for a period of 90 days according to § 798.6400 of this chapter except for the provisions in paragraphs (d)(4)(ii), (5), (8)(iv)(C), and (E)(*2*) of § 798.6400.

(*2*) For the purpose of this section, the following provisions also apply:

(*i*) *Lower doses.* The data from the lower doses shall show either graded dose-dependent effects in at least two of all the doses tested including the highest dose, or no neurotoxic (behavioral) effects at any dose tested.

(*ii*) *Duration and frequency of exposure.* Animals shall be exposed for 6 hours/day, 5 days/week for a 90-day period.

(*iii*) *Clearing and embedding.* After dehydration, tissue specimens shall be cleared with xylene and embedded in paraffin or paraplast except for the sural nerve which should be embedded in plastic. Multiple tissue specimens (e.g. brain, cord, ganglia) may be embedded together in one single block for sectioning. All tissue blocks shall be labeled to provide unequivocal identification. A method for plastic embedding is described by Spencer et al. in paragraph (d)(6) of this section.

(*iv*) *Special stains.* Based on the results of the general staining, selected sites and cellular components shall be further evaluated by the use of specific techniques. If hematoxylin and eosin screening does not provide such information, a battery of stains shall be used to assess the following components in all appropriate required samples: Neuronal body (e.g., Einarson's gallocyanin), axon (e.g., Bodian), myelin sheath (e.g., Kluver's Luxol Fast Blue), and neurofibrils (e.g., Bielchosky). In addition, peripheral nerve fiber teasing may be used. Detailed staining methodology is available in standard histotechnological manuals such as Armed Forces Institute of Pathology (AFIP) (1968) under § 798.6400(f)(1), Ralis et al. (1973) under § 798.6400(f)(5), and Chang (1979) under § 798.6400(f)(2) of this chapter. The nerve fiber teasing technique is discussed in Spencer and Schaumberg (1980) under § 798.6400(f)(6) of this chapter. A section of normal tissue shall be included in each staining to assure that adequate staining has occurred. Any changes shall be noted and representative photographs shall be taken. If a lesion(s) is observed, the special techniques shall be repeated in the next lower treatment group until no further lesion is detectable.

(ii) *Reporting requirements.* (A) The neurotoxicity/behavioral tests required under paragraph (c)(2) of this section shall be completed and the final reports submitted to EPA within 17 months of the effective date of the final rule.

(B) Interim progress reports shall be submitted to EPA at 6-month intervals, beginning 6 months from the effective date of the final rule until submission of the applicable final report to EPA.

(3) *Developmental neurotoxicity*—(i) *Required testing.* A developmental neurotoxicity test of DGBE shall be

conducted after a public program review of the Tier I data from the functional observational battery, motor activity, and neuropathology tests in paragraph (c)(2) of this section, and the reproductive tests in paragraph (c)(1) of this section, and if EPA issues a FEDERAL REGISTER notice or sends a certified letter to the test sponsor specifying that the testing shall be initiated. The test shall be performed in rats in accordance with §795.250 of this chapter.

(ii) *Reporting requirements.* (A) The developmental neurotoxicity test shall be completed and the final report submitted to EPA within 15 months of EPA's notification of the test sponsor by certified letter or FEDERAL REGISTER notice under paragraph (c)(3)(i) of this section that the testing shall be initiated.

(B) Progress reports shall be submitted to EPA every 6 months, beginning 6 months after the date of notification that the testing shall be initiated, until submission of the final report to EPA.

(4) *Pharmacokinetics*—(i) *Required testing.* (A) Pharmacokinetics testing of DGBE and DGBA will be conducted in rats by the dermal route of administration in accordance with §795.225 of this chapter, except for the provisions in paragraphs (b) (1)(ii) and (3)(i) of §795.225.

(B) For the purpose of this section, the following provisions also apply:

(*1*) *Animals.* Adult male and female Sprague Dawley rats shall be used. The rats shall be 7 to 8 weeks old and weigh 180 to 220 grams. Prior to testing, the animals shall be selected at random for each group. Animals showing signs of ill health shall not be used.

(*2*) *Observation of animals—Urinary and fecal excretion.* The quantities of ^{14}C excreted in urine and feces by rats dosed as specified in paragraph (b)(2)(iv) of §795.225 shall be determined at 8, 24, 48, 72, and 96 hours after dosing, and if necessary, daily thereafter until at least 90 percent of the dose has been excreted or until 7 days after dosing (whichever occurs first). Four animals per sex per dose group shall be used for this purpose.

(ii) *Reporting requirements.* (A) The pharmacokinetics tests shall be completed and the final reports submitted to EPA within 8 months of the effective date of the final amendment.

(B) A progress report shall be submitted to EPA 6 months from the effective date of the final amendment.

(d) *References.* For additional background information the following references should be consulted:

(1) Lamb, J.C. and Chapin, R.E. ''Experimental models of male reproductive toxicology.'' In: ''Endocrine Toxicology.'' Thomas, J.A., Korach, K.S., and McLachlan, J.A., eds. New York, NY: Raven Press. pp. 85–115. (1985).

(2) Clermont, Y. and Perey, B. ''Quantitative study of the cell population of the seminiferous tubules in immature rats.'' *American Journal of Anatomy*. 100:241–267. (1957).

(3) Sadleir, R.M.F.S. ''Cycles and seasons.'' In: ''Reproduction in Mammals: I. Germ Cells and Fertilization.'' Austin, C.R. and Short, R.V., eds. New York, NY: Cambridge Press. Chapter 4. (1978).

(4) Mattison, D.R. and Thorgiersson, S.S. ''Ovarian aryl hydrocarbon hydroxylase activity and primordial oocyte toxicity of polycyclic aromatic hydrocarbons in mice.'' *Cancer Research*. 39:3471–3475. (1979).

(5) Pederson, T. and Peters, H. ''Proposal for classification of oocytes and follicles in the mouse ovary. *Journal of Reproduction and Fertility*. 17:555–557. (1968).

(6) Spencer, P.S., Bischoff, M.C., and Schaumburg, H.H. ''Neuropathological methods for the detection of neurotoxic disease.'' In: ''Experimental and Clinical Neurotoxicology.'' Spencer, P.S. and Schaumburg, H.H., eds. Baltimore, MD: Williams & Wilkins, pp. 743–757. (1980).

(7) Hafez, E.S., ed., ''Reproduction and Breeding Techniques for Laboratory Animals.'' Chapter 10. Philadelphia: Lea & Febiger (1970).

(e) *Effective date.* (1) The effective date of the final rule is April 11, 1988, except for paragraph (c)(2)(ii)(A) of this section. The effective date for paragraph (c)(2)(ii)(A) of this section is March 1, 1990. The effective date for paragraphs (c)(4)(ii)(A) and (c)(4)(ii)(B) of this section is November 27, 1989.

(2) The guidelines and other test methods cited in this rule are referenced as they exist on the effective date of the final rule.

[53 FR 5950, Feb. 26, 1988, as amended at 54 FR 27357, June 29, 1989; 54 FR 41835, Oct. 12, 1989; 55 FR 7326, Mar. 1, 1990; 58 FR 34205, June 23, 1993]

§ 799.1575 Diethylenetriamine (DETA).

(a) *Identification of chemical test substance.* (1) Diethylenetriamine (CAS No. 111–40–0, also known as DETA) shall be tested in accordance with this part.

(2) Diethylenetriamine of at least 99 percent purity shall be used as the test substances in all tests.

(b) *Persons required to submit study plans, conduct tests and submit data.* All persons who manufacture or process diethylenetriamine from July 8, 1985, to the end of the reimbursement period shall submit letters of intent to test, exemption applications, and study plans and shall conduct tests and submit data as specified in this section, subpart A of this part and part 790 of this chapter (Test Rule Development and Exemption Procedures).

(c) *Health effects testing*—(1) *Mutagenic effects—Gene mutation*—(i) *Required testing.* (A) A sex-linked recessive lethal test in *Drosophila melanogaster* shall be conducted with DETA.

(B) A mouse specific locus assay shall be conducted with DETA, if the sex-linked recessive lethal test in *Drosophila melanogaster* conducted pursuant to paragraph (c)(1)(i)(A) of this section produces a positive result.

(ii) *Test standards.* (A) The testing for the sex-linked recessive lethal assay shall be conducted in accordance with the following revised EPA-approved modified study plan (June 19, 1986) originally submitted by the Diethylenetriamine Producers/Importers Alliance (DPIA): ''Sex-linked recessive lethal test in *Drosophila melanogaster*,'' with modifications as approved by EPA on March 9, 1987, and May 21, 1987.

(B) The testing for the mouse visible specific locus assay shall be conducted in accordance with the following revised EPA-approved modified study plan (June 19, 1986) originally submitted by the Diethylenetriamine Producers/Importers Alliance (DPIA): ''Mouse specific locus test for visible markers.''

(C) These revised EPA-approved modified study plans are available for inspection in the Non-Confidential Information Center (NCIC) (7407), Office of Pollution Prevention and Toxics, U.S. Environmental Protection Agency, Room B–607 NEM, 401 M St., SW., Washington, DC 20460, between the hours of 12 p.m. and 4 p.m. weekdays excluding legal holidays.

(iii) *Reporting requirements.* (A) The sex-linked recessive lethal test of DETA in *Drosophila melanogaster* shall be completed and a final report submitted to the Agency within 14 months from the effective date of the final Phase II rule. Two interim progress reports shall be submitted at 6-month intervals, the first of which is due within 6 months of the effective date of the final Phase II rule.

(B) If required pursuant to paragraph (c)(1)(i)(B) of this section, the mouse specific locus test of DETA for visible markers shall be completed and a final report submitted to the Agency within 48 months from the designated date contained in EPA's notification of the test sponsor by certified letter or FEDERAL REGISTER notice that testing should be initiated. Seven interim progress reports shall be submitted at 6-month intervals, the first of which is due within 6 months of EPA's designated date.

(2) *Mutagenic effects—Chromosomal aberrations*—(i) *Required testing.* (A) An *in vitro* cytogenetics test shall be conducted with DETA.

(B) An *in vivo* cytogenetics test shall be conducted with DETA, if the *in vitro* cytogenetics test conducted pursuant to paragraph (c)(2)(i)(A) of this section produces a negative result.

(C) A dominant lethal assay shall be conducted with DETA, if either the *in vitro* cytogenetics test conducted pursuant to paragraph (c)(2)(i)(A) of this section or the *in vivo* cytogenetics test conducted pursuant to paragraph (c)(2)(i)(B) of this section produces a positive result.

(D) A heritable translocation assay shall be conducted with DETA, if the dominant lethal assay conducted pursuant to paragraph (c)(2)(i)(C) of this section produces a positive result.

(ii) *Test standards.* (A) The testing for cytogenetic effects shall be conducted in accordance with the following revised EPA-approved modified study plan (June 19, 1986) originally submitted by the Diethylenetriamine Producers/Importers Alliance (DPIA): ''*In vitro* cytogenetics test'' and ''*In vivo* cytogenetics test,'' with modifications as approved by EPA on March 9, 1987, and May 21, 1987.

(B) Other testing for cytogenetic effects shall be conducted in accordance with the following revised EPA-approved modified study plans (June 19, 1986) originally submitted by the Diethylenetriamine Producers/Importers Alliance (DPIA): ''Dominant lethal assay of diethylenetriamine in CD rats,'' and ''Heritable translocation of diethylenetriamine in CD–1 mice.''

(C) These revised EPA-approved modified study plans are available for inspection in the Non-Confidential Information Center (NCIC) (7407), Office of Pollution Prevention and Toxics, U.S. Environmental Protection Agency, Room B– 607 NEM, 401 M St., SW., Washington, DC 20460, between the hours of 12 p.m. and 4 p.m. weekdays excluding legal holidays.

(iii) *Reporting requirements.* (A) The *in vitro* cytogenetics testing of DETA shall be completed and a final report submitted to the Agency within 6 months of the effective date of the final Phase II rule.

(B) If required pursuant to paragraph (c)(2)(i)(B) of this section, the *in vivo* cytogenetics testing of DETA shall be completed and final report submitted to the Agency within 14 months of the effective date of the final Phase II rule. One interim progress report shall be submitted within 12 months of the final rule's effective date.

(C) If required pursuant to paragraph (c)(2)(i)(C) of this section, the dominant lethal testing of DETA shall be completed and a final report submitted to the Agency within 20 months of the effective date of the final Phase II rule.

(D) If required pursuant to paragraph (c)(2)(i)(D) of this section, the heritable translocation testing of DETA shall be completed and a final report submitted to the Agency within 18 months of the designated date contained in EPA's notification of the test sponsor by certified letter or FEDERAL REGISTER notice that testing should be initiated. Two interim progress reports shall be submitted at 6-month intervals, the first of which is due within 6 months of EPA's designated date.

(3) *Subchronic effects*—(i) *Required testing.* A ninety-day oral subchronic toxicity test shall be conducted with DETA in at least one mammalian species.

(ii) *Test standard.* The testing shall be conducted in accordance with the following revised EPA-approved modified study plans (June 19, 1986) originally submitted by the Diethylenetriamine Producers/Importers Alliance (DPIA): ''Ninety-Day (subchronic) dietary toxicity study with diethylenetriamine in albino rats,'' with modifications approved by EPA on March 9, 1987, and May 21, 1987. This revised EPA-approved modified study plans is available for inspection in the Non-Confidential Information Center (NCIC) (7407), Office of Pollution Prevention and Toxics, U.S. Environmental Protection Agency, Room B–607 NEM, 401 M St., SW., Washington, DC 20460, between the hours of 12 p.m. and 4 p.m. weekdays excluding legal holidays.

(iii) *Reporting requirements.* The testing shall be completed and a final report submitted to the Agency within 15 months of the effective date of the final Phase II rule. Two interim progress reports shall be submitted at 6-month intervals, the first of which is due within 6 months of the effective date of the final Phase II rule.

(d) *Chemical fate testing*—(1) *Required testing.* Testing to assess *N*-nitrosamine formation, resulting from aerobic biological and/or chemical transformation, shall be conducted with DETA using environmental samples of lake water, sewage, and soil.

(2) *Test standard.* The testing shall be conducted in accordance with the following revised EPA-approved modified study plan (June 7, 1990) originally submitted by the Diethylenetriamine Producers/Importers Alliance (DPIA): ''Modified Final Copy (04–17–90); Diethylenetriamine: Environmental Fate in Sewage, Lake Water and Soil''. This revised EPA-approved modified study plans are available for inspection in the Non-Confidential Information

Center (NCIC) (7407), Office of Pollution Prevention and Toxics, U.S. Environmental Protection Agency, Room B–607 NEM, 401 M St., SW., Washington, DC 20460, between the hours of 12 p.m. and 4 p.m. weekdays excluding legal holidays.

(3) *Reporting requirements.* The testing shall be completed and a final report submitted to EPA within 20 months of the effective date of the final Phase II rule. Interim progress reports shall be submitted at 6–month intervals, the first of which is due within 6 months of the effective date of the final Phase II rule.

(e) *Modifications.* Persons subject to this section are not subject to the requirements of § 790.50(a)(2)(ii) of this chapter.

(f) *Effective date.* (1) The effective date of the final Phase II rule for diethylenetriamine is March 19, 1987, except for paragraphs (c)(4)(iii), (d)(2), and (d)(3) of this section. The effective date of paragraphs (c)(4)(iii), and (d)(3) of this section is March 1, 1990. The effective date for paragraph (d)(2) of this section is May 21, 1991.

(2) The guidelines and other test methods cited in this rule are referenced as they exist on the effective date of the final rule.

[50 FR 21412, May 23, 1985; 50 FR 33543, Aug. 20, 1985; 51 FR 3468, Jan. 28, 1986; 51 FR 4736, Feb. 7, 1986; 52 FR 3238, Feb. 3, 1987; 54 FR 27356, June 29, 1989; 55 FR 3408, Feb. 1, 1990; 55 FR 7326, Mar. 1, 1990; 56 FR 23230, May 21, 1991; 58 FR 34205, June 23, 1993; 60 FR 34467, July 3, 1995]

§ 799.1645 2-Ethylhexanol.

(a) *Identification of test substance.* (1) 2-Ethylhexanol (CAS No. 104–76–7) shall be tested in accordance with this section.

(2) 2-Ethylhexanol of at least 99.0-percent purity shall be used as the test substance.

(b) *Persons required to submit study plans, conduct tests, and submit data.* All persons who manufacture or process, or intend to manufacture or process 2-ethylhexanol, other than as an impurity, from the effective date of this final rule to the end of the reimbursement period shall submit letters of intent to conduct testing, submit study plans, conduct tests, and submit data or exemption applications as specified in this section, subpart A of this part, and parts 790 and 792 of this chapter for single-phase rulemaking.

(c) *Health effects*—(1) *Oncogenic effects*—(i) *Required testing.* (A) Oncogenicity tests shall be conducted in Fisher 344 rats and B6C3Fl mice by the oral route with 2-ethylhexanol in accordance with § 798.3300 of this chapter, except for the provisions in § 798.3300(b)(6).

(B) For the purpose of this section, the following provisions also apply to the oncogenicity tests: (*1*) *Administration of the test substance.* 2-Ethylhexanol shall be administered either by microencapsulation before adding it to the diet or by gavage.

(*2*) [Reserved]

(ii) *Reporting requirements.* (A) The study plan for the oncogenicity test shall be submitted at least 45 days before the initiation of testing.

(B) The oncogenicity testing shall be completed and final report submitted to the Agency within 53 months of the effective date of this final rule if 2-ethylhexanol is administered by gavage or within 56 months of the effective date of this final rule if administered by microencapsulation.

(C) Interim progress reports shall be submitted to EPA at 6-month intervals beginning 6 months after the effective date of the final rule, until the final report is submitted to EPA.

(2) [Reserved]

(d) *Effective date.* The effective date of this final rule requiring oncogenicity testing of 2-ethylhexanol is September 16, 1987.

[52 FR 28704, Aug. 3, 1987, as amended at 58 FR 34205, June 23, 1993]

§ 799.1700 Fluoroalkenes.

(a) *Identification of test substances.* (1) Vinyl fluoride (VF; CAS No. 75–02–5), vinylidene fluoride (VDF; CAS No. 75–38–7), tetrafluoroethene (TFE; CAS No. 116–14–3), and hexafluoropropene (HFP; CAS No. 116–15–4) shall be tested in accordance with this section.

(2) VF, VDF, TFE, and HFP of at least 99 percent purity shall be used as the test substances.

(b) *Persons required to submit study plans, conduct tests and submit data.* All persons who manufacture VF, VDF,

TFE, or HFP, other than as an impurity, from July 22, 1987 to the end of the reimbursement period shall submit letters of intent to conduct testing or exemption applications, submit study plans, conduct tests in accordance with the TSCA Good Laboratory Practice Standards (40 CFR part 792), and submit data as specified in this section, subpart A of this part, and part 790 of this chapter for single-phase rulemaking, for the substances they manufacture.

(c) *Health effects testing*—(1) *Mutagenic effects—Gene mutation*—(i) *Required testing.* (A) (*1*) A detection of gene mutations in somatic cells in culture assay shall be conducted with TFE and HFP in accordance with §798.5300 of this chapter except for the provisions in paragraphs (c), (d)(3)(i), (4), (5) and (6) and (e).

(*2*) For the purposes of this section, the following provisions also apply:

(*i*) *Reference substances.* No reference substance is required.

(*ii*) *Test method—Type of cells used in the assay.* Mutation induction at the HPRT locus shall be measured in Chinese hamster ovary (CHO) cells. Cells shall be checked for Mycoplasma contamination and may also be checked for karyotype stability.

(*iii*) *Test method—Metabolic activation.* Cells shall be exposed to the test substance only in the presence of a metabolic activation system for TFE, and in both the presence and absence of a metabolic activation system for HFP. The metabolic activation system shall be derived from the post-mitochondrial fraction (S–9) of livers from rats pretreated with Aroclor 1254.

(*iv*) *Test method—Control groups.* Positive and negative controls shall be included in each experiment. In assays with metabolic activation, the positive control substance shall be known to require such activation. Nitrogen shall serve as the negative control and diluting gas.

(*v*) *Test method—Test chemicals.* The test should be designed to have a predetermined sensitivity and power. The number of cells, cultures, and concentrations of test substance used should reflect these defined parameters. The number of cells per culture is based on the expected background mutant frequency; a general guide is to use a number which is 10 times the inverse of this frequency. Several concentrations (usually at least four) of the test substance shall be used. These shall yield a concentration-related toxic effect. The highest concentration shall produce a low level of survival (approximately 10 percent), and the survival in the lowest concentration shall approximate that of the negative control. Cytotoxicity shall be determined after treatment with the test substance both in the presence and in the absence of the metabolic activation system.

(*vi*) *Test performance.* Cells in treatment medium with and without metabolic activation shall be exposed to varying concentrations of test gas-air mixtures by flushing treatment flasks (or chambers) with 10 volumes of test gas-air mixture at a rate of 500 mL/min or that rate which will allow complete flushing within 1 minute. In the case of a test chamber volume of 1.67 L, a flow rate of 10 L/min is appropriate. Each flask shall be closed with a cap with a rubber septum. Headspace samples shall be taken at the beginning and end of the exposure period and analyzed to determine the amount of test gas in each flask. Flasks shall be incubated on a rocker panel at 37 ° C for 5 hours for tests with metabolic activation. For the non-activated portion of the test, the incubation time shall be 18 to 19 hours at 37 ° C. At the end of the exposure period, cells treated with metabolic activation shall be washed and incubated in culture medium for 21 to 26 hours prior to subculturing the viability and expression of mutant phenotype. Cells treated without metabolic activation shall be washed and subcultured immediately to determine viability and to allow for expression of mutant phenotype. Appropriate subculture schedules (generally twice during the expression period) shall be used. At the end of the expression period, which shall be sufficient to allow near optimal phenotypic expression of induced mutants (generally 7 days for this cell system), cells shall be grown in medium with and without selective agent

for determination of numbers of mutants and cloning efficiency, respectively. This last growth period is generally 7 days at 37 ° C. Results of this test shall be confirmed in an independent experiment.

(B)(*1*) A sex-linked recessive lethal test in *Drosophila melanogaster* shall be conducted with VDF and VF in accordance with § 798.5275 of this chapter except for the provisions in paragraph (d)(5). This test shall also be performed with TFE or HFP if the somatic cells in culture assay conducted pursuant to paragraph (c)(1)(i)(A) of this section produces a positive result.

(*2*) For the purposes of this section the following provisions also apply:

(*i*) *Test chemicals.* It is sufficient to test a single dose of the test substance. This dose shall be the maximum tolerated dose or that which produces some indication of toxicity. Exposure shall be by inhalation.

(*ii*) [Reserved]

(C)(*1*) A mouse visible specific locus assay (MVSL) shall be conducted with VF, VDF, TFE, and HFP in accordance with § 798.5200 of this chapter, except for the provisions of paragraph (d)(5) of § 798.5200, or a mouse biochemical-specific locus assay (MBSL) shall be conducted with VF, VDF, TFE, and HFP in accordance with § 798.5195 of this chapter, except for the provisions of paragraph (d)(5) of § 798.5195, for whichever of these substances produces a positive test result in the sex-linked recessive lethal test in *Drosophila melanogaster* conducted pursuant to paragraph (c)(1)(i)(B) of this section if, after a public program review, EPA issues a FEDERAL REGISTER notice or sends a certified letter to the test sponsor specifying that the testing shall be initiated.

(*2*) For the purposes of this section, the following provisions also apply:

(*i*) *Test chemicals.* A minimum of two dose levels shall be tested. The highest dose tested shall be the highest dose tolerated without toxic effects, provided that any temporary sterility induced due to elimination of spermatagonia is of only moderate duration, as determined by a return of males to fertility within 80 days after treatment, or shall be the highest dose attainable. Animals shall be exposed to the test substance by inhalation. Exposure shall be for 6 hours a day. Duration of exposure shall be dependent upon accumulated total dose desired for each group.

(*ii*) [Reserved]

(ii) *Reporting requirements.* (A) Mutagenic effects-gene mutation tests shall be completed and the final reports shall be submitted to EPA as follows: Somatic cells in culture assay, within 6 months after the effective date of the final rule; *Drosophila* sex-linked recessive lethal, within 9 months (for VF and VDF) and within 15 months (for TFE and HFP) after the effective date of the final rule; MVSL or MBSL, within 51 months after the date of EPA's notification of the test sponsor by certified letter or FEDERAL REGISTER notice that testing shall be initiated.

(B) Progress reports shall be submitted to the Agency every 6 months beginning 6 months after the effective date of the final rule or receipt of notice that testing shall be initiated.

(2) *Mutagenic effects—Chromosomal aberrations*—(i) *Required testing.* (A)(*1*) A mouse micronucleus cytogenetics test shall be conducted with VDF and TFE in accordance with § 798.5395 of this chapter except for the provisions in paragraphs (d)(5) (i), (ii), and (iii).

(*2*) For the purposes of this section, the following provisions also apply:

(*i*) *Test method—Vehicle.* No vehicle is required.

(*ii*) *Test method—Dose levels.* Three dose levels shall be used. The highest dose tested shall be the maximum tolerated dose, that dose producing some indication of cytotoxicity (e.g., a change in the ratio of polychromatic to normochromatic erythrocytes, or the highest dose attainable).

(*iii*) *Test method—route of administration.* Animals shall be exposed by inhalation with a single 6-hour exposure, with three sampling times between 20 and 72 hours.

(B)(*1*) For each respective test substance, a dominant lethal assay shall be conducted with VF and HFP in accordance with § 798.5450 of this chapter except for the provisions in paragraphs (d)(2)(i), (4) (i), (5) and (e). This test shall also be performed with TFE or VDF if the mouse micronucleus cytogenetics test conducted pursuant to

paragraph (c)(2)(i)(A) of this section produces a positive result.

(*2*) For the purposes of this section, the following provisions also apply:

(*i*) *Test method—Description.* For this assay, the test substance shall be administered by inhalation for 5 consecutive days for 6 hours per day.

(*ii*) *Test method—Concurrent controls.* Concurrent positive and negative (vehicle) controls shall be included in each experiment.

(*iii*) *Test method—Test chemicals.* Exposure shall be by inhalation for 5 consecutive days for 6 hours per day. Three dose levels shall be used. The highest dose shall produce signs of toxicity (e.g., slightly reduced fertility) or shall be the highest attainable.

(*iv*) *Test performance.* Individual males shall be mated sequentially to 1 or 2 virgin females. Females shall be left with the males for at least the duration of one estrus cycle or alternatively until mating has occurred as determined by the presence of sperm in the vagina or by the presence of a vaginal plug. In any event, females shall be left with the males for no longer than 7 days. The number of matings following treatment shall ensure that germ cell maturation is adequately covered. Mating shall continue for at least 6 weeks. Females shall be sacrificed in the second half of pregnancy, and uterine contents shall be examined to determine the number of implants and live and dead embryos. The examination of ovaries to determine the number of corpora lutea is left to the discretion of the investigator.

(C)(*1*) A heritable translocation assay shall be conducted with VF, VDF, TFE, or HFP in accordance with § 798.5460 of this chapter except for the provisions of paragraphs (d)(3)(i), (5), and (e)(1), if the dominant lethal assay conducted for that substance pursuant to paragraph (c)(2)(i)(B) of this section produces a positive result and if, after a public program review, EPA issues a FEDERAL REGISTER notice or sends a certified letter to the test sponsor specifying that the testing shall be initiated.

(*2*) For the purposes of this section, the following provisions also apply:

(*i*) *Test method—Animal selection.* The mouse shall be used as the test species.

(*ii*) *Test method.* No vehicle is required. At least two dose levels shall be used. The highest dose level shall result in toxic effects (which shall not produce an incidence of fatalities which would preclude a meaningful evaluation) or shall be the highest dose attainable. Animals shall be exposed by inhalation.

(*iii*) *Test performance—Treatment and mating.* The animals shall be dosed with the test substance 6 hours per day, 7 days per week over a period of 35 days. After treatment, each male shall be caged with 2 untreated females for a period of 1 week. At the end of 1 week, females shall be separated from males and caged individually. When females give birth, the date of birth, litter size and sex of progeny shall be recorded. All male progeny shall be weaned and all female progeny shall be discarded.

(ii) *Reporting requirements.* (A) Mutagenic effects-chromosomal aberration testing shall be completed and final results submitted to EPA after the effective date of the rule as follows: mouse micronucleus cytogenetics for VDF by November 22, 1988, and for TFE within 10 months after the effective date of the final rule; dominant lethal assay for VF and HFP by October 22, 1988, and for VDF and TFE within 19 months after the effective date of the rule; heritable translocation assay, within 25 months after the date of EPA's notification of the test sponsor by certified letter or FEDERAL REGISTER notice that testing shall be initiated.

(B) Progress reports shall be submitted to the Agency every 6 months beginning 6 months after the effective date of the final rule or receipt of notice that testing shall be initiated.

(3) *Subchronic toxicity*—(i) *Required Testing.* (A) An inhalation subchronic toxicity test shall be conducted with HFP in accordance with the TSCA Test Guideline specified in § 798.2450 of this chapter except for the provisions in paragraphs (d)(5), (10)(v), and (e)(3)(iv)(D).

(B) For the purpose of this section the following provisions also apply:

(*1*) *Test procedures—Exposure conditions.* The animals shall be exposed to the test substance 6 hours per day, 5 days per week for 90 days.

(*2*) *Test procedures—Observation of animals.* Animals shall be weighted weekly, and food and water consumption shall also be measured weekly.

(*3*) *Test report—Individual animal data.* Food and water consumption data shall be reported.

(ii) *Reporting requirements.* (A) The required subchronic toxicity test shall be completed and final results submitted to the Agency within 18 months after the effective date of the final rule.

(B) Progress reports shall be submitted to the Agency every 6 months beginning 6 months after the effective date of the final rule.

(4) *Oncogenicity*—(i) *Required testing.* (A) (*1*) Oncogenicity tests shall be conducted in both rats and mice by inhalation with VF in accordance with § 798.3300 of this chapter, except for the provisions in paragraph (b)(7)(vi) of § 798.3300.

(*2*) For the purposes of this section, the following provisions also apply:

(*i*) *Test procedures—observations of animals.* All mice of test groups in which survival is approximately 25 percent of mice at risk (approximately 25 percent of 70, or approximately 18 mice) will be sacrificed near the time that 25 percent survival is achieved. All mice surviving the 18–month test period will be sacrificed and necropsied. The order of sacrifice for mice at all pathological evaluations will be random among all exposure groups within a sex. Moribund animals should be removed and sacrificed when noticed.

(*ii*) All rats of test groups in which survival is approximately 25 percent of rats at risk (approximately 25 percent of 60, or approximately 15 rats) will be sacrificed near the time that 25 percent survival is achieved. All rats surviving the 24–month test period will be sacrificed and necropsied. The order of sacrifice for rats at all pathological evaluations will be random among all exposure groups within a sex. Moribund animals should be removed and sacrificed when noticed.

(B) Oncogenicity testing shall be conducted in mice with VDF in accordance with § 798.3300 of this chapter.

(C) [Reserved]

(D) Oncogenicity tests shall also be conducted by inhalation in both rats and mice with TFE in accordance with § 798.3300 of this chapter if TFE yields a positive test result in any one of the following mutagenicity tests: The *in vitro* cytogenetics assay conducted pursuant to paragraph (c)(2)(i)(A) of this section, the mouse micronucleus cytogenetics assay conducted pursuant to paragraph (c)(2)(i)(B) of this section, the mammalian cells in culture assay conducted pursuant to paragraph (c)(1)(i)(A) of this section or the sex-linked recessive lethal assay in *Drosophila melanogaster* conducted pursuant to paragraph (c)(1)(i)(B) of this section if, after a public program review, EPA issues a FEDERAL REGISTER notice or sends a certified letter to the test sponsor specifying that the testing shall be initiated. Criteria for positive test results are established in 40 CFR 798.5375, 798.5385, 798.5300 and 798.5275 of this chapter, respectively.

(ii) *Reporting requirements.* (A) The oncogenicity testing for VDF shall be completed and the final results submitted to the Agency by March 23, 1992. The oncogenicity testing for VF shall be completed and the final results submitted to the Agency by July 22, 1992. For TFE and HFP, the oncogenicity testing shall be completed and the final results submitted to the Agency within 56 months after the date of EPA's notification of the test sponsor by certified letter or FEDERAL REGISTER notice that testing shall be initiated.

(B) Progress reports shall be submitted every 6 months beginning 6 months after the effective date of the final rule for VF and VDF and beginning 6 months after notification by certified letter or FEDERAL REGISTER notice that testing is to begin for TFE and HFP.

(d) *Effective date.* (1) The effective date of the final rule is July 22, 1987, except for paragraphs (c)(1)(i)(C)(1), (c)(1)(ii)(A), (c)(4)(i) and(c)(4)(ii)(A) of this section. The effective date of paragraphs (c)(1)(i)(C)(*1*) and (c)(1)(ii)(A) of this section is May 21, 1990. The effective date of paragraphs (c)(4)(i)(A)(*1*) (c)(4)(i)(A)(*2*)(*i*), (c)(4)(i)(B) and (c)(4)(i)(D) of this section is May 21, 1991. The effective date for paragraphs (c)(4)(i)(A)(*2*)(*ii*) and (c)(4)(i)(C) of this section is June 12, 1992. The effective

date of paragraph (c)(4)(ii)(A) of this section is May 28, 1993.

(2) The guidelines and other test methods cited in this rule are referenced as they exist on the effective date of the final rule.

[52 FR 21530, June 8, 1987, as amended at 52 FR 43762, Nov. 16, 1987; 54 FR 27357, June 29, 1989; 54 FR 33148, Aug. 11, 1989; 55 FR 12643, Apr. 5, 1990; 56 FR 23230, May 21, 1991; 57 FR 24960, June 12, 1992; 58 FR 30992, May 28, 1993; 58 FR 34205, June 23, 1993]

§ 799.2155 Commercial hexane.

(a) *Identification of test substance.* (1) ''Commercial hexane,'' for purposes of this section, is a product obtained from crude oil, natural gas liquids, or petroleum refinery processing in accordance with the American Society for Testing and Materials Designation D 1836–83 (ASTM D 1836), consists primarily of six-carbon alkanes or cycloalkanes, and contains at least 40 liquid volume percent *n*-hexane (CAS No. 110–54–3) and at least 5 liquid volume percent methylcyclopentane (MCP; CAS No. 96–37–7). ASTM D 1836, formally entitled ''Standard Specification for Commercial Hexanes,'' is published in *1986 Annual Book of ASTM Standards: Petroleum Products and Lubricants,* ASTM D 1836–83, pp. 966–967, 1986, is incorporated by reference, and is available for public inspection at the National Archives and Records Administration (NARA). For information on the availability of this material at NARA, call 202–741–6030, or go to: *http://www.archives.gov/federal_register/code_of_federal_regulations/ibr_locations.html.* This incorporation by reference was approved by the Director of the Office of the Federal Register in accordance with 5 U.S.C. 522(a) and 1 CFR part 51. This material is incorporated as it exists on the date of approval, and a notice of any change in this material will be published in the FEDERAL REGISTER. Copies of the incorporated material may be obtained from the Non-Confidential Information Center (NCIC) (7407), Office of Pollution Prevention and Toxics, U.S. Environmental Protection Agency, Room B–607 NEM, 401 M St., SW., Washington, DC 20460, between the hours of 12 p.m. and 4 p.m. weekdays excluding legal holidays.

(2) The commercial hexane test substance, for purposes of this section, is a product which conforms to the specifications of ASTM D1836 and contains at least 40 liquid volume percent but no more than 55 liquid volume percent *n*-hexane and no less than 10 liquid volume percent MCP.

(b) *Persons required to submit study plans, conduct tests, and submit data.* All persons who manufacture (including import) or process or intend to manufacture or process commercial hexane, as defined in paragraph (a)(1) of this section and other than as an impurity, from the effective date of the final rule to the end of the reimbursement period shall submit letters of intent to conduct testing, submit study plans, conduct tests in accordance with part 792 of this chapter, and submit data, or submit exemption applications, as specified in this section, subpart A of this part, and part 790 of this chapter for single-phase rulemaking. Persons who manufacture commercial hexane as a byproduct are covered by the requirements of this section. Notwithstanding § 790.50(a)(1) of this chapter, persons who notify EPA of their intent to conduct neurotoxicity testing in compliance with paragraph (c)(7) of this section may submit study plans for those tests less than 45 days before beginning testing provided that EPA receives the study plans before this testing begins.

(c) *Health effects testing*—(1) *Subchronic inhalation toxicity*—(i) *Required testing.* (A) A subchronic inhalation toxicity test shall be conducted with commercial hexane in accordance with § 798.2450 of this chapter except for the provisions in paragraphs (d)(4)(ii) and (5) of § 798.2450.

(B) For the purposes of this section, the following provisions also apply:

(*1*) *High dose level.* The highest concentration should result in toxic effects but neither produce an incidence of fatalities which would prevent a meaningful evaluation nor exceed the lower explosive limit of commercial hexane.

(*2*) *Exposure conditions.* Animals shall be dosed for 6 hours/day, 5 days/week for 90 days.

(ii) *Reporting requirements.* (A) The subchronic inhalation toxicity test

shall be completed and the final report submitted to EPA within 15 months of the effective date of the final rule.

(B) Interim progress reports shall be submitted to EPA for the subchronic inhalation toxcity test at 6-month intervals beginning 6 months after the effective date of the final rule, until the final report is submitted to EPA.

(2) *Oncogenicity*—(i) *Required testing.* (A) An oncogenicity test shall be conducted with commercial hexane in accordance with § 798.3300 of this chapter except for the provisions in paragraphs (b)(3)(ii) and (6) of § 798.3300.

(B) For the purposes of this section, the following provisions also apply:

(*1*) *High dose level.* The high dose level should elicit signs of minimal toxicity without substantially altering the normal life span and should not exceed the lower explosive limit of commercial hexane.

(*2*) *Administration of test substance.* Animals shall be exposed to commercial hexane by inhalation.

(ii) *Reporting requirements.* (A) The oncogenicity test shall be completed and the final report submitted to EPA within 53 months of the effective date of the final rule. The mouse portion of the oncogenicity study shall be submitted by June 5, 1993.

(B) Interim progress reports shall be submitted to EPA for the oncogenicity test at 6-month intervals beginning 6 months after the effective date of the final rule, until the final report is submitted to EPA.

(3) *Reproduction and fertility effects*—(i) *Required testing.* (A) A reproduction and fertility effects test shall be conducted with commercial hexane in accordance with § 798.4700 of this chapter except for the provisions in paragraphs (c)(3)(ii) and (5) of § 798.4700.

(B) For the purposes of this section, the following provisions also apply:

(*1*) *High dose level.* The highest dose level should induce toxicity but not high levels of mortality in the parental (P) animals. In addition, the highest dose level should not exceed the lower explosive limit of commercial hexane.

(*2*) *Administration of test substance.* Animals shall be exposed to commercial hexane by inhalation.

(ii) *Reporting requirements.* (A) The reproduction and fertility effects test shall be completed and the final report submitted to EPA within 29 months of the effective date of the final rule.

(B) Interim progress reports shall be submitted to EPA for the reproduction and fertility effects test at 6-month intervals beginning 6 months after the effective date of the final rule, until the final report is submitted to EPA.

(4) *Inhalation developmental toxicity*—(i) *Required testing.* (A) An inhalation developmental toxicity test shall be conducted with commercial hexane in accordance with § 795.4350 of this chapter except for the provisions in paragraph (e)(3)(iv) of § 798.4350.

(B) For the purposes of this section, the following provisions also apply:

(*1*) *High dose level.* Unless limited by the physical/chemical nature or biological properties of the test substance, the highest concentration level shall induce some overt maternal toxicity such as reduced body weight or body weight gain, but not more than 10 percent maternal deaths. In addition, the highest dose level should not exceed the lower explosive limit of commercial hexane.

(*2*) [Reserved]

(ii) *Reporting requirements.* (A) The inhalation developmental toxicity test shall be completed and the final report submitted to EPA within 12 months of the effective date of the final rule.

(B) Interim progress reports shall be submitted to EPA for the inhalation developmental toxicity test at 6-month intervals beginning 6 months after the effective date of the final rule, until the final report is submitted to EPA.

(5) *Mutagenic effects—gene mutations*—(i) *Required testing.* (A)(*1*) A *Salmonella typhimurium* reverse mutation assay shall be conducted with commercial hexane in accordance with § 798.5265 of this chapter except for the provisions in paragraphs (d)(4) and (e) of § 798.5265.

(*2*) For the purposes of this section, the following provisions also apply:

(*i*) *Metabolic activation.* Bacteria shall be exposed to commercial hexane both in the presence and absence of an appropriate metabolic activation system.

(*ii*) *Test performance.* The assay shall be performed using the desiccator method described as follows: The agar overlay plates shall be placed uncovered in a 9-liter desiccator. A volume of

the liquid test substance shall be added to the glass Petri dish suspended beneath the porcelain shelf of the desiccator. The highest exposure concentration should not result in a vapor concentration which exceeds the lower explosive limit of commerical hexane. A magnetic stirring bar to serve as a fan to assure rapid and even distribution of the vapor shall be placed on the bottom of the inside of the desiccator. The desiccator shall be placed on a magnetic stirrer within a 37° C room or chamber for 7 to 10 hours. The plates shall then be removed, their lids replaced, followed by incubation for an additional 40 hours at 37° C before counting. An appropriate selective medium with an adequate overlay agar shall be used. All plating should be done in at least triplicate.

(B)(*1*) A gene mutation test in mammalian cells shall be conducted with commercial hexane in accordance with §798.5300 of this chapter except for the provisions in paragraphs (d)(3)(ii) and (4) of §798.5300 if the results from the *Salmonella typhimurium* test conducted pursuant to paragraph (c)(5)(i)(A) of this section are negative.

(*2*) For the purposes of this section, the following provisions also apply:

(*i*) *Cell growth and maintenance.* Appropriate culture media and incubation conditions (culture vessels, CO_2 concentrations, temperature, and humidity) shall be used. The cell culture shall be directly dosed by pipetting liquid commercial hexane mixed with liquid DMSO into the culture medium. Cells shall be exposed to test substance both in the presence and absence of an appropriate metabolic activation system.

(*ii*) [Reserved]

(C)(*1*) A sex-linked recessive lethal test in *Drosophila melanogaster* shall be conducted with commercial hexane in accordance with §798.5275 of this chapter except for the provisions in paragraphs (d)(5) (ii) and (iii) of §798.5275, unless the results of both the *Salmonella typhimurium* test conducted pursuant to paragraph (c)(5)(i)(A) of this section and the mammalian cells in the culture gene mutation test conducted pursuant to paragraph (c)(5)(i)(B) of this section, if required, are negative.

(*2*) For the purposes of this section, the following provisions also apply:

(*i*) *Dose levels.* For the initial assessment of mutagenicity, it is sufficient to test a single dose of the test substance for screening purposes. This dose should be the maximum tolerated dose, or that which produces some indication of toxicity or shall be the highest dose attainable and should not exceed the lower explosive limit of commercial hexane. For dose-response purposes, at least three additional dose levels should be used.

(*ii*) *Route of administration.* The route of administration shall be by exposure to commercial hexane vapors.

(D)(*1*) Unless the results of the sex-linked recessive lethal test in *Drosophila melanogaster* conducted with commercial hexane pursuant to paragraph (c)(5)(i)(C) of this section are negative, EPA shall conduct a public program review of all of the mutagenicity data available for this substance. If, after this review, EPA decides that testing of commercial hexane for causing heritable gene mutations in mammals is necessary, it shall notify the test sponsor by certified letter or FEDERAL REGISTER notice that testing shall be initiated in either the mouse visible specific locus test or the mouse biochemical specific locus test. The mouse visible specific locus test, if conducted, shall be performed for commercial hexane in accordance with §798.5200 of this chapter except for the provisions in paragraphs (d)(5)(ii) and (d)(5)(iii) of §798.5200. The mouse biochemical specific locus test, if conducted, shall be performed for commercial hexane in accordance with §798.5195 of this chapter except for the provisions in paragraphs (d)(5)(ii) and (d)(5)(iii) of §798.5195.

(*2*) For the purposes of this section, the following provisions also apply:

(*i*) *Dose levels.* A minimum of two dose levels shall be tested. The highest dose tested shall be the highest dose tolerated without toxic effects, provided that any temporary sterility induced due to elimination of spermatogonia is of only moderate duration, as determined by a return of males to fertility within 80 days of treatment, or shall be the highest dose attainable below the lower explosive

limit concentration of commercial hexane. Exposure shall be for 6 hours a day. Duration of exposure shall be dependent upon the accumulated total dose desired for each group.

(*ii*) *Route of administration.* Animals shall be exposed to commercial hexane by inhalation.

(ii) *Reporting requirements.* (A) The gene mutation tests shall be completed and final reports submitted to EPA as follows:

(*1*) The *Salmonella typhimurium* reverse mutation assay within 8 months of the effective date of the final rule.

(*2*) The gene mutation in mammalian cells assay within 17 months of the effective date of the final rule.

(*3*) The sex-linked recessive-lethal test in *Drosophila melanogaster* within 24 months of the effective date of the final rule.

(*4*) The mouse visible specific locus test or the mouse biochemical specific locus test shall be completed and a final report shall be submitted to EPA within 51 months of the date on which the test sponsor is notified by EPA by certified letter or FEDERAL REGISTER notice that testing shall be initiated.

(B) Interim progress reports for each test shall be submitted to EPA for the gene mutation in mammalian cells assay and *Drosophila* sex-linked recessive lethal test at 6-month intervals beginning 6 months after the effective date of the final rule, until the applicable final report is submitted to EPA.

(C) Interim progress reports for either the mouse visible specific locus test or the mouse biochemical specific locus test shall be submitted to EPA at 6–month intervals, beginning 6 months after EPA's notification of the test sponsor that testing should be initiated, until the applicable final report is submitted to EPA.

(6) *Mutagenic effects—chromosomal aberrations*—(i) *Required testing.* (A)(*1*) An *in vitro* cytogenetics test shall be conducted with commercial hexane in accordance with § 798.5375 of this chapter except for the provisions in paragraph (e)(3) of § 798.5375.

(*2*) For the purposes of this section, the following provisions also apply:

(*i*) *Treatment with test substance.* The test substance shall be added in liquid form mixed with DMSO to the treatment vessels.

(*ii*) [Reserved]

(B)(*1*) An *in vivo* cytogenetics test shall be conducted with commercial hexane in accordance with § 798.5385 of this chapter except for the provisions in paragraphs (d)(5) (ii), (iii) and (iv) of § 798.5385, if the *in vitro* test conducted pursuant to paragraph (c)(6)(i)(A) of this section is negative.

(*2*) For the purposes of this section, the following provisions also apply:

(*i*) *Dose levels.* For an initial assessment, one dose level of the test substance may be used, the dose being the maximum tolerated dose (to a maximum of 5,000 mg/kg), or that producing some indication of cytotoxicity (e.g., partial inhibition of mitosis), or shall be the highest dose attainable (to a maximum of 5,000 mg/kg) and should not exceed the lower explosive limit of commercial hexane. Additional dose levels may be used. For determination of dose-response, at least three dose levels should be used.

(*ii*) *Route of administration.* Animals shall be exposed to commercial hexane by inhalation.

(*iii*) *Treatment schedule.* The duration of exposure shall be for 6 hours per day for 5 consecutive days.

(C)(*1*) A dominant lethal assay shall be conducted with commercial hexane in accordance with § 798.5450 of this chapter except for the provisions in paragraphs (d)(5) (ii) and (iii) of § 798.5450, unless both the *in vitro* and *in vivo* cytogenetics tests conducted pursuant to paragraphs (c)(6)(i) (A) and (B) of this section are negative.

(*2*) For the purposes of this section, the following provisions also apply:

(*i*) *Dose levels.* Normally, three dose levels shall be used. The highest dose shall produce signs of toxicity (e.g., slightly reduced fertility and slightly reduced body weight). The highest dose should not exceed the lower explosive limit of commercial hexane. However, in an initial assessment of dominant lethality, a single high dose may be sufficient. Nontoxic substances shall be tested at 5 g/kg or, if this is not practicable, then at the highest dose attainable.

(*ii*) *Route of administration.* Animals shall be exposed to commercial hexane by inhalation.

(*iii*) *Treatment schedule.* The duration of exposure shall be for 6 hours per day for 5 consecutive days.

(D)(*1*) A heritable translocation test shall be conducted with commercial hexane in accordance with § 798.5460 of this chapter except for the provisions in paragraphs (d)(5) (ii) and (iii) of § 798.5460, if the results of the dominant lethal assay conducted pursuant to paragraph (c)(6)(i)(C) of this section are positive and if, after a public program review, EPA issues a FEDERAL REGISTER notice or sends a certified letter to the test sponsor specifying that the testing shall be initiated.

(*2*) For the purposes of this section, the following provisions also apply:

(*i*) *Dose levels.* At least two dose levels shall be used. The highest dose level shall result in toxic effects (which shall not produce an incidence of fatalities which would prevent a meaningful evaluation) or shall be the highest dose attainable or 5 g/kg body weight and should not exceed the lower explosive limit of commercial hexane.

(*ii*) *Route of administration.* Animals shall be exposed to commercial hexane by inhalation.

(*iii*) *Reporting requirements.* (A) The chromosomal aberration tests shall be completed and the final reports submitted to EPA as follows:

(*1*) The *in vitro* cytogenetics test within 15 months of the effective date of the final rule.

(*2*) The *in vivo* cytogenetics test within 19 months of the effective date of the final rule.

(*3*) The dominant lethal assay within 28 months of the effective date of the final rule.

(*4*) The heritable translocation test within 25 months of the date of EPA's notification of the test sponsor by certified letter or FEDERAL REGISTER notice that testing shall be initiated.

(B) Interim progress reports for each test shall be submitted to EPA for the *in vivo* cytogenetics and the dominant lethal assays at 6-month intervals beginning 6 months after the effective date of the final rule, until the applicable final report is submitted to EPA.

(C) Interim progress reports shall be submitted to EPA for the heritable translocation assay at 6-month intervals beginning 6 months after the date of EPA's notification of the test sponsor that testing shall be initiated, until the final report is submitted to EPA.

(7) *Neutrotoxicity*—(i) *Required testing.* (A)(*1*) A schedule-controlled operant behavior test shall be conducted with commercial hexane in accordance with § 798.6500 of this chapter except for the provisions in paragraphs (d)(5)(i), (6) and (7) of § 798.6500.

(*2*) For the purposes of this section, the following provisions also apply:

(*i*) *High dose level.* The highest dose shall produce clear behavioral effects or life-threatening toxicity. In addition, the highest dose should not exceed the lower explosive limit of commercial hexane.

(*ii*) *Duration and frequency of exposure.* Animals shall be dosed once for 4 to 6 hours.

(*iii*) *Route of administration.* Animals shall be exposed to commercial hexane by inhalation.

(B)(*1*) A functional observation battery shall be conducted with commercial hexane in accordance with § 798.6050 of this chapter except for the provisions in paragraphs (d)(4)(i), (5), and (6) of § 798.6050.

(*2*) For the purposes of this section, the following provisions also apply:

(*i*) *High dose level.* The highest dose shall produce clear behavioral effects or life-threatening toxicity. In addition, the highest dose should not exceed the lower explosive limit of commercial hexane.

(*ii*) *Duration and frequency of exposure.* Animals shall be dosed for 6 hours/day, 5 days/week for 90 days.

(*iii*) *Route of exposure.* Animals shall be exposed to commercial hexane by inhalation.

(C)(*1*) A motor activity test shall be conducted with commercial hexane in accordance with § 798.6200 of this chapter except for the provisions in paragraphs (d)(4)(i), (5), and (6) of § 798.6200.

(*2*) For the purposes of this section, the following provisions also apply:

(*i*) *High dose level.* The highest dose shall produce clear effects on motor activity of life-threatening toxicity. In addition, the highest dose should not

exceed the lower explosive limit of commercial hexane.

(*ii*) *Duration and frequency of exposure.* Animals shall be dosed for 6 hours/day, 5 days/week for 90 days.

(*iii*) *Route of exposure.* Animals shall be exposed to commercial hexane by inhalation.

(D)(*1*) A neuropathology test shall be conducted with commercial hexane in accordance with § 798.6400 of this chapter except for the provisions in paragraphs (d)(4)(i), (5), and (6) of § 798.6400.

(*2*) For the purposes of this section, the following provisions also apply:

(*i*) *High dose level.* The highest dose shall produce clear behavior effects or life-threatening toxicity. In addition, the highest dose should not exceed the lower explosive limit of commercial hexane.

(*ii*) *Duration and frequency of exposure.* Animals shall be dosed for 6 hours/day, 5 days/week for 90 days.

(*iii*) *Route of exposure.* Animals shall be exposed to commercial hexane by inhalation.

(ii) *Reporting requirements.* (A) The schedule-controlled operant behavior, functional observation battery, motor activity, and neuropathology tests shall be completed and the final reports submitted to EPA within 15 months of the effective date of the final rule.

(B) Interim progress reports for each test shall be submitted to EPA for the schedule-controlled operant behavior, functional observation battery, motor activity, and neuropathology tests at 6-month intervals beginning 6 months after the effective date of the applicable final rule, until the applicable final report is submitted to EPA.

(8) *Pharmacokinetics*—(i) *Required testing.* (A) Pharmacokinetics testing shall be conducted in rats in accordance with § 795.232 of this chapter, except for paragraph (c)(1)(ii) of § 795.232.

(B) For the purposes of this section, the following provisions also apply:

(*1*) *Test animals.* Adult male and female rats shall be used for testing. The rats shall be 9 to 11 weeks old and their weight range should be comparable from group to group. The animals shall be purchased from a reputable dealer and shall be permanently identified upon arrival. The animals shall be selected at random for the testing groups, and any animal showing signs of ill health shall not be used.

(*2*) *Species and strain.* The rat strain used shall be the same as the strain used in the subchronic and chronic tests required under § 798.2450(d)(1)(i) and § 798.3300(b)(1)(i).

(ii) *Reporting requirements.* (A) The inhalation and dermal pharmacokinetics tests shall be completed and the final report submitted to EPA by August 21, 1992.

(B) Interim progress reports shall be submitted to EPA for the inhalation and dermal pharmacokinetics tests at 6-month intervals, beginning 6 months after the effective date specified in paragraph (d)(1) of this section, until the final report is submitted to EPA.

(d) *Effective date.* (1) The effective date of this final rule is November 17, 1988, except for the provisions of paragraphs (c)(2)(ii)(A), (c)(5)(i)(D), (c)(5)(ii)(A)(4), (c)(5)(ii)(C), (c)(8)(i) and (c)(8)(ii)(A) of this section. The effective date for paragraphs (c)(5)(i)(D), (c)(5)(ii)(A)(4) and (c)(5)(ii)(C) of this section is May 21, 1990. The effective date for paragraphs (c)(8)(i) and (c)(8)(ii)(A) of this section is June 12, 1992. The effective date of paragraph (c)(2)(ii)(A) is September 8, 1994.

(2) The guidelines and other test methods cited in this rule are referenced as they exist on the effective date of the final rule.

[53 FR 3392, Feb. 5, 1988, as amended at 53 FR 38953, Oct. 4, 1988; 55 FR 634, Jan. 8, 1990; 55 FR 7325, Mar. 1, 1990; 55 FR 12643, Apr. 5, 1990; 57 FR 24961, June 12, 1992; 58 FR 34205, June 23, 1993; 59 FR 46357, Sept. 8, 1994; 60 FR 34467, July 3, 1995; 69 FR 18803, Apr. 9, 2004]

§ 799.2325 Isopropanol.

(a) *Identification of test substance.* (1) Isopropanol (CAS No. 67–63–0) shall be tested in accordance with this section.

(2) Isopropanol of at least 99.8 percent purity shall be used as the test substance.

(b) *Persons required to submit study plans, conduct tests, and submit data.* All persons who manufacture (including import or byproduct manufacture) or intend to manufacture or process isopropanol, from the effective date of

this rule to the end of the reimbursement period, shall submit letters of intent to conduct testing, submit study plans, conduct tests, and submit data or submit exemption applications as specified in this section, subpart A of this part, and parts 790 and 792 of this chapter for single-phase rulemaking.

(c) *Health effects testing*—(1) *Subchronic inhalation toxicity*—(i) *Required testing.* A subchronic inhalation toxicity test shall be conducted with isopropanol in accordance with § 798.2450 of this chapter.

(ii) *Reporting requirements.* (A) The subchronic inhalation toxicity test shall be completed and the final report submitted to EPA within 15 months of the date specified in paragraph (d) of this section.

(B) Progress reports shall be submitted to EPA for the subchronic inhalation toxicity test at 6-month intervals beginning 6 months after the date specified in paragraph (d)(1) of this section until submission of the final report.

(2) *Reproduction and fertility effects*—(i) *Required testing.* A reproduction and fertility effects test shall be conducted by gavage with isopropanol in accordance with § 798.4700 of this chapter.

(ii) *Reporting requirements.* (A) The reproduction and fertility effects test shall be completed and the final report submitted to EPA within 29 months of the date specified in paragraph (d)(1) of this section.

(B) Progress reports shall be submitted at 6-month intervals beginning 6 months after the date specified in paragraph (d)(1) of this section until submission of the final report.

(3) *Developmental toxicity*—(i) *Required testing.* A developmental toxicity test shall be conducted in two mammalian species by gavage with isopropanol in accordance with § 798.4900 of this chapter.

(ii) *Reporting requirements.* (A) The developmental toxicity test shall be completed and the final report submitted to EPA within 12 months of the date specified in paragraph (d)(1) of this section.

(B) A progress report shall be submitted 6 months after the date specified in paragraph (d)(1) of this section.

(4) *Mutagenic effects—gene mutations*—(i) *Required testing.* (A) A gene mutation test in mammalian cells shall be conducted with isopropanol in accordance with § 798.5300 of this chapter.

(B)(*1*) A sex-linked recessive lethal test in *Drosophila melanogaster* shall be conducted with isopropanol in accordance with § 798.5275 of this chapter, except for the provisions in paragraphs (d)(5)(ii) and (iii) of § 798.5275, unless the results of the mammalian cells in the culture gene mutation test conducted pursuant to paragraph (c)(5)(i)(A) of this section are negative.

(*2*) For the purpose of this section, the following provisions also apply:

(*i*) *Route of administration.* The route of administration shall be by exposure to isopropanol vapors or by injection of isopropanol.

(*ii*) [Reserved]

(C)(*1*) The mouse visible specific locus (MVSL) test shall be conducted with isopropanol by inhalation in accordance with § 798.5200, except for the provisions in paragraphs (d)(5)(ii) and (iii) of § 798.5200, if the results of the sex-linked recessive lethal test conducted pursuant to paragraph (c)(4)(i)(B) of this section are positive and if, after a public program review, EPA issues a FEDERAL REGISTER notice or sends a certified letter to the test sponsor specifying that the testing shall be initiated.

(*2*) For the purpose of this section, the following provisions also apply:

(*i*) *Dose levels and duration of exposure.* A minimum of 2 dose levels shall be tested. The duration of exposure shall be for 6 hours per day. Duration of exposure shall be dependent upon accumulated total dose desired for each group.

(*ii*) *Route of administration.* Animals shall be exposed to isopropanol by inhalation.

(ii) *Reporting requirements.* (A) The gene mutation tests shall be completed and final report submitted to EPA as follows:

(*1*) The gene mutation in mammalian cells assay within 6 months of the date specified in paragraph (d)(1) of this section.

(*2*) The sex-linked recessive-lethal test in *Drosophila melanogaster* within

18 months of the date specified in paragraph (d)(1) of this section.

(*3*) The mouse visible specific-locus test within 51 months of the date of EPA's notification of the test sponsor by certified letter or FEDERAL REGISTER notice under paragraph (c)(4)(i)(C) of this section that testing shall be initiated.

(B) Progress reports shall be submitted to EPA for the *Drosophila* sex-linked recessive lethal test at 6-month intervals beginning 6 months after the date specified in paragraph (d)(1) of this section until the submission of the final report.

(C) Progress reports shall be submitted to EPA for the mouse visible specific locus test at 6-month intervals beginning 6 months after the date of EPA's notification of the test sponsor that testing shall be initiated until submission of the final report.

(5) *Mutagenic effects—chromosomal aberrations*—(i) *Required testing.* (A)(*1*) The micronucleus test shall be conducted with isopropanol in accordance with § 798.5395 of this chapter.

(*2*) For the purpose of this section, the following provisions also apply:

(*i*) *Route of administration.* Animals shall be exposed to isopropanol by either inhalation or oral gavage or inperitoneally (IP).

(*ii*) *Duration of exposure.* For inhalation, the duration of exposure shall be for 6 hours per day for 5 consecutive days with one sacrifice time or for 6 hours for 1 day with three sacrifice times.

(B)(*1*) A dominant lethal assay shall be conducted with isopropanol in accordance with § 798.5450 of this chapter, except for the provisions in paragraphs (d)(5)(ii) and (iii) of § 798.5450, unless the micronucleus test conducted pursuant to paragraphs (c)(5)(i)(A) of this section is negative.

(*2*) For the purpose of this section, the following provisions also apply:

(*i*) *Route of administration.* Animals shall be exposed to isopropanol by inhalation.

(*ii*) *Duration of exposure.* The duration of exposure shall be for 6 hours per day for 5 consecutive days.

(C)(*1*) The mouse visible specific locus test (MVSL) shall be conducted with isopropanol by inhalation in accordance with § 798.5200 of this chapter, except for the provisions in paragraphs (d)(5)(ii) and (d)(5)(iii) of § 798.5200, or a mouse biochemical specific locus test (MBSL) shall be conducted with isopropanol by inhalation in accordance with § 798.5195 of this chapter, except for the provisions in paragraphs (d)(5)(ii) and (d)(5)(iii) of § 798.5195, if the results of the sex-linked recessive lethal test conducted pursuant to paragraph (c)(4)(i)(B) of this section are positive and if, after a public program review, EPA issues a FEDERAL REGISTER notice or sends a certified letter to the test sponsor specifying that the testing shall be initiated.

(*2*) For the purpose of this section, the following provisions also apply:

(*i*) *Route of administration.* Animals shall be exposed to isopropanol by inhalation.

(*ii*) [Reserved]

(ii) *Reporting requirements.* (A) The chromosomal aberration tests shall be completed and the final reports submitted to EPA as follows:

(*1*) The micronucleus test within 15 months of the date specified in paragraph (d)(1) of this section.

(*2*) The dominant lethal assay within 27 months of the date specified in paragraph (d)(1) of this section.

(*3*) The MVSL or MBSL test within 51 months of the date of EPA's notification of the test sponsor by certified letter or FEDERAL REGISTER notice under paragraph (c)(4)(i)(C) of this section that testing shall be initiated.

(B) Progress reports shall be submitted to EPA for the micronucleus and the dominant lethal assays at 6-month intervals beginning 6 months after the date specified in paragraph (d)(1) of this section until submission of the final report.

(C) Progress reports shall be submitted to EPA for the heritable translocation assay at 6-month intervals beginning 6 months after the date of EPA's notification of the test sponsor that testing shall be initiated until submission of the final report.

(6) *Neurotoxicity*—(i) *Required testing.* (A)(*1*) A functional observation battery shall be conducted with isopropanol in accordance with § 798.6050 of this chapter except for the provisions in paragraphs (d)(5) and (6) of § 798.6050.

(*2*) For the purpose of this section, the following provisions also apply:

(*i*) *Duration and frequency of exposure.* For subchronic study, animals shall be dosed for 6 hours per day, 5 days per week for 90 days. For acute study, animals shall be dosed for 4 to 6 hours once.

(*ii*) *Route of exposure.* Animals shall be exposed to isopropanol by inhalation.

(B)(*1*) A motor activity test shall be conducted with isopropanol in accordance with § 798.6200 of this chapter except for the provisions in paragraphs (d)(5) and (6) of § 798.6200.

(*2*) For the purpose of this section, the following provisions also apply:

(*i*) *Duration of exposure.* For subchronic study, animals shall be dosed for 6 hours per day, 5 days per week for 90 days. For acute study, animals shall be dosed for 4 to 6 hours once.

(*ii*) *Route of exposure.* Animals shall be exposed to isopropanol by inhalation.

(C)(*1*) A neuropathology test shall be conducted with isopropanol in accordance with § 798.6400 of this chapter except for the provisions in paragraphs (d)(5) and (6) of § 798.6400.

(*2*) For the purpose of this section, the following provisions also apply:

(*i*) *Duration of exposure.* Animals shall be dosed for 6 hours per day, 5 days per week for 90 days.

(*ii*) *Route of exposure.* Animals shall be exposed to isopropanol by inhalation.

(D) The developmental neurotoxicity test shall be conducted with isopropanol in accordance with § 795.250 of this chapter, except for paragraph (c)(1)(iv).

(*1*) For purposes of this section, the following provisions also apply:

(*i*) *Numbers of animals.* The objective is for a sufficient number of pregnant rats to be exposed to ensure that an adequate number of offspring are produced for neurotoxicity evaluation. At least 24 litters shall be used at each dose level.

(*ii*) [Reserved]

(*2*) [Reserved]

(ii) *Reporting requirements.* (A) The acute functional observation battery and motor activity tests shall be completed and the final report submitted to EPA within 15 months of the date specified in paragraph (d)(1) of this section. The subchronic functional observation battery, motor activity, and neuropathology tests shall be completed and the final reports submitted to EPA within 18 months of the date specified in paragraph (d)(1) of this section. The developmental neurotoxicity test shall be completed and the final report submitted to EPA within 21 months of the date specified in paragraph (d)(1) of this section.

(B) Progress reports shall be submitted to EPA for the functional observation battery, motor activity, neuropathology, and developmental neurotoxicity tests at 6-month intervals beginning 6 months after the date specified in paragraph (d)(1) of this section until submission of the applicable final report.

(7) *Pharmacokinetics studies*—(i) *Required testing.* An oral and inhalation pharmacokinetics test shall be conducted with isopropanol in accordance with § 795.231 of this chapter.

(ii) *Reporting requirements.* (A) The pharmacokinetic test shall be completed and the final report submitted to EPA within 15 months of the date specified in paragraph (d)(1) of this section.

(B) Progress reports shall be submitted to EPA for the pharmacokinetics test at 6-month intervals beginning 6 months after the date specified in paragraph (d)(1) of this section until submission of the final report.

(8) *Oncogenicity*—(i) *Required testing.* An oncogenicity test shall be conducted by inhalation with isopropanol in accordance with § 798.3300 of this chapter.

(ii) *Reporting requirements.* (A) The oncogenicity test shall be completed and the final report submitted to EPA by July 5, 1994.

(B) Progress reports shall be submitted at 6-month intervals beginning 6 months after the date specified in paragraph (d)(1) of this section until submission of the final report.

(d) *Effective date.* (1) The effective date of this final rule is December 4, 1989, except for the provisions of paragraphs (c)(5)(i)(C)(*1*), (c)(5)(ii)(A)(*3*), (c)(6)(i)(D), and (c)(8)(ii)(A), of this section. The effective date for paragraphs

(c)(5)(i)(C)(*1*), and (c)(5)(ii)(A)(*3*) of this section is May 21, 1990. The effective date for paragraphs (c)(6)(i)(D) of this section is May 21, 1991. The effective date of paragraph (c)(8)(ii)(A) is September 29, 1995.

(2) The guidelines and other test methods cited in this rule are references as they exist on the effective date of the final rule.

[54 FR 43262, Oct. 23, 1989, as amended at 55 FR 12644, Apr. 5, 1990; 56 FR 23231, May 21, 1990; 58 FR 34205, June 23, 1993; 60 FR 56956, Nov. 13, 1995]

§ 799.2475 2-Mercaptobenzothiazole.

(a) *Identification of test substance.* (1) 2-Mercaptobenzothiazole (MBT, CAS No. 149–30–4) shall be tested in accordance with this section.

(2) MBT of at least 97.6 percent purity (plus or minus 1.5 percent) shall be used as the test substance.

(b) *Persons required to submit study plans, conduct tests, and submit data.* All persons who manufacture (including byproduct manufacture, and import of MBT and MBT-containing articles) or process or intend to manufacture or process MBT, other than as an impurity, after October 21, 1988, to the end of the reimbursement period shall submit letters of intent to conduct testing, submit study plans, conduct tests, and submit data, or submit exemption applications as specified in this section, subpart A of this part, and parts 790 and 792 of this chapter for single-phase rulemaking.

(c) *Chemical fate*—(1) *Aerobic aquatic biodegradation*—(i) *Required testing.* Aerobic aquatic biodegradation testing shall be conducted with MBT in accordance with § 796.3100 of this chapter.

(ii) *Reporting requirements.* (A) The aerobic aquatic biodegradation test shall be completed and the final report submitted to EPA within 12 months of the effective date of the final rule.

(B) An interim progress report shall be submitted to EPA 6 months after the effective date of the final rule.

(2) *Indirect photolysis-screening level test*—(i) *Required testing.* Indirect photolysis testing shall be conducted with MBT in accordance with § 795.70 of this chapter.

(ii) *Reporting requirements.* (A) The indirect photolysis test shall be completed and the final report submitted to EPA within 12 months of the effective date of the final rule.

(B) An interim progress report shall be submitted to EPA 6 months after the effective date of the final rule.

(3) *Chemical mobility*—(i) *Required testing.* Chemical mobility testing shall be conducted with MBT in accordance with § 796.2750 of this chapter.

(ii) *Reporting requirements.* (A) The chemical mobility test shall be completed and the final report submitted to EPA within 12 months of the effective date of the final rule.

(B) An interim progress report shall be submitted to EPA 6 months after the effective date of this final rule.

(d) *Environmental effects*—(1) *Fish chronic toxicity*—(i) *Required testing.* (A) Chronic toxicity testing of MBT shall be conducted using rainbow trout (*Salmo gairdneri.*) according to § 797.1600 of this chapter, except for paragraphs (c)(4)(iv)(A), (c)(4)(x)(E) and (c)(4)(x)(F), (c)(6)(iv)(A), (d)(2)(vii)(A)(*2*), and (d)(3)(iv) of § 797.1600.

(B) For the purpose of this section, the following provisions also apply:

(*1*) The first feeding for the fathead and sheepshead minnow fry shall begin shortly after transfer of the fry from the embryo cups to the test chambers. Silversides are fed the first day after hatch. Trout species initiate feeding at swim-up. The trout fry shall be fed trout starter mash or live newly-hatched brine shrimp nauplii (*Artemia salina*) three times a day *ad libitum*, with excess food siphoned off daily. The minnow fry shall be fed live newly-hatched brine shrimp nauplii (*Artemia salina*) at least three times a day.

(*2*) All physical abnormalities (e.g., stunted bodies, scoliosis, etc.) shall be photographed and preserved.

(*3*) At termination, all surviving fish shall be measured for growth. Total length measurements should be used except in cases where fin erosion occurs, then the use of standard length measurements shall be permitted. Standard length measurements should be made directly with a caliper, but may be measured photographically. Measurements shall be made to the nearest millimeter (0.1 mm is desirable). Weight measurements shall also

be made for each fish alive at termination (wet, blotted dry, and to the nearest 0.01 g for the minnows and 0.1 g for the trout). If the fish exposed to the toxicant appear to be edematous compared to control fish, determination of dry, rather than wet, weight is recommended.

(*4*)(*i*) *Test substance measurement.* Prior to addition of the test substance to the dilution water, it is recommended that the test substance stock solution be analyzed to verify the concentration. After addition of the test substance, the concentration of test substance shall be measured in the test substance delivery chamber prior to beginning, and during, the test. The concentration of test substance should also be measured at the beginning of the test in each test concentration (including both replicates) and control(s), and at least once a week thereafter. Equal aliquots of test solution may be removed from each replicate chamber and pooled for analysis. If a malfunction in the delivery system is discovered, water samples shall be taken from the affected test chambers immediately and analyzed.

(*ii*) *pH.* It is recommended that a pH of 7 be maintained in the test chambers.

(*iii*) *Reporting.* An analysis of the stability of the stock solution for the duration of the test shall be reported.

(*5*) [Reserved]

(*6*) For brook and rainbow trout, a 16–hour light and 8–hour dark photoperiod shall be provided.

(ii) *Reporting requirements.* (A) The fish chronic toxicity test shall be completed and the final report submitted to EPA within 12 months of the effective date of the final rule.

(B) An interim progress report shall be submitted to EPA 6 months after the effective date of the final rule.

(2) *Daphnid chronic toxicity*—(i) *Required testing.* (A) Daphnid chronic toxicity testing shall be conducted with MBT using *Daphnia magna* according to § 797.1330 of this chapter.

(B) For the purposes of this section, the following provisions also apply:

(*1*) *Test substance measurement.* Test substance concentration shall be measured in the test substance delivery chamber prior to beginning, and during, the test.

(*2*) *pH.* It is recommended that a pH of 7 be maintained in the test chambers.

(*3*) *Reporting.* An analysis of the stability of the stock solution for the duration of the test shall be reported and data comparing trout starter mash with *A. salina* for supporting trout growth should be submitted with the final report.

(ii) *Reporting requirements.* (A) The daphnid chronic toxicity test shall be completed and the final report submitted to EPA within 12 months of the effective date of the final rule.

(B) An interim progress report shall be submitted to EPA 6 months after the effective date of the final rule.

(e) *Health effects*—(1) *Developmental toxicity testing*—(i) *Required testing.* Developmental toxicity testing shall be conducted in two mammalian species with MBT in accordance with § 798.4900 of this chapter, using the oral route of administration.

(ii) *Reporting requirements.* (A) The developmental toxicity test shall be completed and the final report submitted to EPA within 12 months of the effective date of the final rule.

(B) An interim progress report shall be submitted to EPA 6 months after the effective date of the final rule.

(2) *Reproductive toxicity*—(i) *Required testing.* Reproductive toxicity testing shall be conducted with MBT in accordance with § 798.4700 of this chapter, using the oral route of administration.

(ii) *Reporting requirements.* (A) The reproductive test shall be completed and the final report submitted to EPA within 29 months of the effective date of the final rule.

(B) Progress reports shall be submitted to EPA at 6-month intervals beginning 6 months after the effective date of the final rule until submission of the final report.

(3) *Neurotoxicity*—(i) *Required testing.* (A)(*1*) An acute and subchronic functional observation battery shall be conducted with MBT in accordance with § 798.6050 of this chapter except for the provisions in paragraphs (d)(5) and (6) of § 798.6050.

(*2*) For the purpose of this section, the following provisions also apply:

(*i*) *Duration and frequency of exposure.* For acute study, animals shall be administered MBT over a period not to exceed 24 hours. For subchronic study, animals shall be dosed daily for at least 90 days.

(*ii*) *Route of exposure.* Animals shall be exposed to MBT orally.

(B)(*1*) An acute and subchronic motor activity test shall be conducted with MBT in accordance with § 798.6200 of this chapter except for the provisions in paragraphs (d)(5) and (6) of § 798.6200.

(*2*) For the purpose of this section the following provisions also apply:

(*i*) *Duration and frequency of exposure.* For acute study, animals shall be administered over a period not to exceed 24 hours. For subchronic study, animals shall be dosed daily for at least 90 days.

(*ii*) *Route of exposure.* Animals shall be exposed to MBT orally.

(C)(*1*) A subchronic neuropathology test shall be conducted with MBT in accordance with § 798.6400 of this chapter except for the provisions in paragraphs (d)(5) and (6) of § 798.6400.

(*2*) For the purpose of this section, the following provisions also apply:

(*i*) *Duration and frequency of exposure.* Animals shall be dosed daily for at least 90 days.

(*ii*) *Route of exposure.* Animals shall be exposed to MBT orally.

(ii) *Reporting requirements.* (A) The functional observation battery, motor activity, and neuropathology tests shall be completed and the final reports for each test submitted to EPA within 18 months of the effective date of the final rule.

(B) A progress report shall be submitted to EPA for the functional observation battery, motor activity, and neuropathology tests, respectively, 6 months after the effective date of the final rule.

(4) *Mutagenic effects—Chromosomal aberrations*—(i) *Required testing.* (A) A dominant lethal assay shall be conducted with MBT in accordance with § 798.5450 of this chapter, using the oral route of administration.

(B) A heritable translocation assay shall be conducted with MBT in accordance with the test guideline specified in § 798.5460 of this chapter if MBT produces a positive result in the dominant lethal assay conducted pursuant to paragraph (e)(4)(i)(A) of this section and if, after a public program review, EPA issues a FEDERAL REGISTER notice or sends a certified letter to the test sponsor specifying that the testing shall be initiated.

(ii) *Reporting requirements.* (A) Mutagenic effects—Chromosomal aberration testing of MBT shall be completed and the final report submitted to EPA as follows: Dominant lethal assay, within 12 months after the effective date of this rule; heritable translocation assay, within 24 months after notification under paragraph (e)(4)(i)(B) of this section that the testing shall be initiated.

(B) For the dominant lethal assay, an interim progress report shall be submitted to EPA 6 months after the effective date of the final rule; for the heritable translocation assay, progress reports shall be submitted to EPA at 6-month intervals beginning 6 months after the date of EPA's notification of the test sponsor that testing shall be initiated until submission of the final report.

(f) *Effective date.* (1) The effective date of this final rule is October 21, 1988, except for paragraphs (a)(2), (d)(1)(i), (d)(2)(i)(B)(*3*), and (e)(3)(ii)(A) of this section. The effective date for paragraphs (a)(2), (d)(1)(i), (d)(2)(i)(B)(*3*), and (e)(3)(ii)(A) of this section is March 1, 1990.

(2) The guidelines and other test methods cited in this rule are referenced as they exist on the effective date of the final rule.

[53 FR 34530, Sept. 7, 1988; 53 FR 37393, Sept. 26, 1988, as amended at 55 FR 7326, Mar. 1, 1990; 58 FR 34205, June 23, 1993]

§ 799.2700 Methyl ethyl ketoxime.

(a) *Identification of test substance.* (1) Methyl ethyl ketoxime (MEKO, CAS No. 96–29–7) shall be tested in accordance with this section.

(2) MEKO of at least 99 percent purity shall be used as the test substance.

(b) *Persons required to submit study plans, conduct tests, and submit data.* All persons who manufacture (including import) or process or intend to manufacture or process MEKO, including persons who manufacture or process or intend to manufacture or process

MEKO as a byproduct, or who import or intend to import products which contain MEKO, after the date specified in paragraph (e) of this section to the end of the reimbursement period, shall submit letters of intent to conduct testing, submit study plans, conduct tests and submit data, or submit exemption applications, as specified in this section, subpart A of this part, and parts 790 and 792 of this chapter for single-phase rulemaking. Persons who manufacture, import, or process MEKO only as an impurity are not subject to these requirements.

(c) *Health effects testing*—(1) *Pharmacokinetics testing*—(i) *Required testing.* Pharmacokinetics testing shall be conducted with MEKO in accordance with paragraph (c)(1)(ii) of this section.

(ii) [Reserved]

(2) *Oncogenicity*—(i) *Required testing.* Oncogenicity testing shall be conducted in accordance with § 798.3300 of this chapter.

(ii) *Route of administration.* MEKO shall be administered either orally or by inhalation.

(iii) *Reporting requirements.* (A) Oncogenicity testing shall be completed and a final report submitted to EPA within 53 months of the date specified in paragraph (e) of this section.

(B) Interim progress reports shall be submitted to EPA at 6-month intervals, beginning 6 months after the date specified in paragraph (e) of this section, until submission of the final report to EPA.

(3) *Developmental toxicity*—(i) *Required testing.* Developmental toxicity testing shall be conducted in a rodent and a nonrodent mammalian species in accordance with § 798.4900 of this chapter.

(ii) *Route of administration.* MEKO shall be administered orally.

(iii) *Reporting requirements.* (A) Developmental toxicity testing shall be completed and a final report submitted to EPA within 15 months of the date specified in paragraph (e) of this section.

(B) Interim progress reports shall be submitted to EPA at 6-month intervals, beginning 6 months after the date specified in paragraph (e) of this section.

(4) *Reproductive toxicity*—(i) *Required testing.* (A) Reproductive toxicity testing shall be conducted orally in accordance with § 798.4700 of this chapter except for the provisions in paragraphs (c) (8)(iii) and (9)(i) of § 798.4700.

(B) For the purpose of this section, the following provisions also apply:

(*1*) The following organs and tissues, or representative samples thereof, shall be preserved in a suitable medium for possible future histopathological examination: Vagina, uterus, oviducts, ovaries, testes, epididymides, vas deferens, seminal vesicles, prostate, pituitary gland, and, target organ(s) of all P and F_1 animals selected for mating.

(*2*)(*i*) Full histopathology shall be conducted on the organs and tissues listed in paragraph (c)(4)(i)(B)(*1*) of this section for all high dose and control P and F_1 animals selected for mating.

(*ii*) The integrity of the various cell stages of spermatogenesis shall be determined, with particular attention directed toward achieving optimal quality in the fixation and embedding. Preparations of testicular and associated reproductive organ samples for histology should follow the recommendations of Lamb and Chapin (1985) under paragraph (d)(1) of this section, or an equivalent procedure. Histopathology of the testes shall be conducted on all P and F_1 adult males at the time of sacrifice, and histological analyses shall include evaluations of the spermatogenic cycle, i.e., the presence and integrity of the 14 cell stages. These evaluations should follow the guidance provided by Clermont and Percy (1957) under paragraph (d)(2) of this section. Information shall also be provided regarding the nature and level of lesions observed in control animals for comparative purposes.

(*iii*) Data on female cyclicity shall be obtained by conducting vaginal cytology in P and F_1 females over the last 3 weeks prior to mating; the cell staging technique of Sadleir (1978) and the vaginal smear method in Hafez (1978) under paragraphs (d)(3) and (d)(7) of this section, respectively, or equivalent methods should be used. Data shall be provided on whether the animal is cycling and the cycle length.

(*iv*) P and F_1 females shall continue to be exposed to MEKO for at least an additional 2 weeks following weaning of offspring to permit them to begin cycling once again. They shall then be

sacrificed and their ovaries shall be serially sectioned with a sufficient number of sections examined to adequately detail oocyte and follicular morphology. The methods of Mattison and Thorgiersson (1979) and Pederson and Peters (1968) under paragraphs (d) (4) and (5) of this section, respectively, may provide guidance. The strategy for sectioning and evaluation is left to the discretion of the investigators, but shall be described in detail in the study plan and final report. The nature and background level of lesions in control tissue shall also be noted.

(*v*) Gross and histopathologic evaluations shall be conducted on the mammary glands in F_1 females and F_2 pups sacrificed at weaning and in adult F_1 females at the termination of the study. Any abnormalities shall be described in the final report.

(ii) *Reporting requirements.* (A) Reproductive toxicity testing shall be completed and a final report submitted to EPA within 29 months of the date specified in paragraph (e) of this section.

(B) Interim progress reports shall be submitted to EPA at 6-month intervals, beginning six months after the date specified in paragraph (e) of this section until submission of the final report to EPA.

(5) *Mutagenic effects—gene mutations*—(i) *Required testing.* The sex-linked recessive lethal assay in *Drosophila* shall be conducted with MEKO in accordance with § 798.5275 of this chapter.

(ii) *Reporting requirements.* (A) The sex-linked recessive lethal assay in *Drosophila* shall be completed and a final report submitted to EPA within 18 months of the date specified in paragraph (e) of this section.

(B) Interim progress reports shall be submitted to EPA at 6-month intervals beginning 6 months after the date specified in paragraph (e) of this section.

(6) *Mutagenic effects—chromosomal aberrations*—(i) *Required testing.* (A) An in vivo mammalian bone marrow cytogenetics test shall be conducted with MEKO in accordance with either § 798.5385 (chromosomal analysis) of this chapter, or § 798.5395 (micronucleus assay) of this chapter except for the provisions in paragraphs (d)(5) (ii), (iii), and (iv) of §§ 798.5385 and 798.5395.

(B) For the purpose of this section, the following provisions also apply if § 798.5385 of this chapter is used in conducting the test:

(*1*) *Dose levels and duration of exposure.* At least three dose levels shall be tested. The highest dose tested shall be the maximum tolerated dose or that dose producing some signs of cytotoxicity (e.g., partial inhibition of mitosis) or shall be the highest dose attainable. Under oral administration, animals shall be exposed once per day for 5 consecutive days. Under administration by inhalation, animals shall be exposed 6 hours per day for 5 consecutive days.

(*2*) *Route of administration.* Animals shall be exposed to MEKO either orally or by inhalation.

(C) For the purpose of this section, the following provisions also apply if § 798.5395 of this chapter is used in conducting the test:

(*1*) *Dose levels and duration of exposure.* At least three-dose levels shall be tested. The highest dose tested shall be the maximum tolerated dose or that dose producing some signs of cytotoxicity (e.g., a change in the ratio of polychromatic to normochromatic erythrocytes) or shall be the highest dose attainable. Under oral administration animals shall be exposed once per day for 5 consecutive days. Under administration by inhalation, animals shall be exposed 6 hours per day for 5 consecutive days.

(*2*) *Route of administration.* Animals shall be exposed to MEKO either orally or by inhalation.

(ii) *Reporting requirements.* (A) The oral in vivo mammalian cytogenetics test shall be completed and a final report submitted to EPA within 14 months of the date specified in paragraph (e) of this section. The inhalation in vivo mammalian cytogenetics test shall be completed and a final report submitted to EPA within 17 months of the date specified in paragraph (e) of this section.

(B) Interim progress reports shall be submitted to EPA at 6-month intervals, beginning 6 months after the date specified in paragraph (e) of this section.

(7) *Neurotoxicity*—(i) *Required testing*—(A) *Functional observational battery.* (*1*)

A functional observational battery shall be conducted with MEKO in accordance with § 798.6050 of this chapter except for the provisions in paragraphs (d) (4)(ii), (5), and (6) of § 798.6050.

(*2*) For the purpose of this section, the following provisions also apply:

(*i*) *Route of exposure.* Animals shall be exposed either orally or by inhalation.

(*ii*) *Lower doses.* The data from the lower doses shall show either graded dose-dependent effects in at least two of all the doses tested, including the highest dose, or no neurotoxic (behavioral) effects at any dose tested.

(*iii*) *Duration and frequency of exposure.* For the oral acute testing, animals shall be exposed once. For the oral subchronic testing, animals shall be exposed once per day 5 days per week for a 90-day period. For the inhalation acute testing, animals shall be exposed for 6 hours for 1 day. For the inhalation subchronic testing, animals shall be exposed 6 hours per day 5 days per week for a 90-day period.

(B) *Motor activity.* (*1*) A motor activity test shall be conducted with MEKO in accordance with § 798.6200 of this chapter except for provisions in paragraphs (d) (4)(ii), (5), and (6) of § 798.6200.

(*2*) For the purpose of this section, the following provisions also apply:

(*i*) *Route of exposure.* Animals shall be exposed either orally or by inhalation.

(*ii*) *Lower doses.* The data from the lower doses shall show either graded dose-dependent effects in at least two of all the doses tested including the highest dose, or no neurotoxic (behavioral) effects at any dose tested.

(*iii*) *Duration and frequency of exposure.* For the acute oral testing, animals shall be exposed once. For the oral subchronic testing, animals shall be exposed once per day 5 days per week for a 90-day period. For the acute inhalation testing, animals shall be exposed for 6 hours for 1 day. For the inhalation subchronic testing, the animals shall be exposed for 6 hours per day 5 days per week for a 90-day period.

(C) *Neuropathology.* (*1*) A neuropathology test shall be conducted with MEKO in accordance with § 798.6400 of this chapter except for the provisions in paragraphs (d) (4)(ii), (5), (6), and (8)(iv)(C) of § 798.6400.

(*2*) For the purpose of this section, the following provisions also apply:

(*i*) *Route of exposure.* Animals shall be exposed either orally or by inhalation.

(*ii*) *Lower doses.* The data from the lower doses shall show either graded dose-dependent effects in at least two of all the doses tested including the highest dose, or no neurotoxic (behavioral) effects at any dose tested.

(*iii*) *Duration and frequency of exposure.* Animals shall be exposed orally once per day 5 days per week for a 90-day period; or if exposed by inhalation, for 6 hours per day 5 days per week for a 90-day period.

(*iv*) *Clearing and embedding.* After dehydration, tissue specimens shall be cleared with xylene and embedded in paraffin or paraplast except for the sural nerve which should be embedded in plastic. Multiple tissue specimens (e.g., brain, cord, ganglia) may be embedded together in one single block for sectioning. All tissue blocks shall be labeled to provide unequivocal identification. A suggested method for plastic embedding is described by Spencer et al. in paragraph (d)(6) of this section.

(ii) *Reporting requirements.* (A) The neurotoxicity tests required under this paragraph (c)(7) and administered orally shall be completed and the final results submitted to EPA within 18 months of the date specified in paragraph (e) of this section. The neurotoxicity tests required under this paragraph (c)(7) and administered by inhalation shall be completed and the final results submitted to EPA within 21 months of the date specified in paragraph (e) of this section.

(B) Interim progress reports shall be submitted to EPA at 6-month intervals beginning 6 months after the date specified in paragraph (e) of this section until submission of the final report to EPA.

(d) *References.* For additional background information, the following references should be consulted.

(1) Lamb, J. and Chapin, R.E. ''Experimental models of male reproductive toxicology.'' In: ''Endocrine Toxicity.'' Thomas, J.A., Korach, K.S., and McLachlan, J.A., eds. New York, NY: Raven Press. pp. 85–115. (1985).

(2) Clermont, Y. and Percey, B. ''Quantitative study of the cell population of the seminiferous tubules in immature rats.'' ''American Journal of Anatomy.'' 100:241–267. (1957).

(3) Sadleir, R.M.F.S. ''Cycles and seasons.'' In: ''Reproduction in Mammals: I. Germ Cells and Fertilization.'' Austin, R. and Short R.V., eds. New York, NY: Cambridge Press. Chapter 4. (1978).

(4) Mattison, D.R. and Thorgiersson, S.S. ''Ovarian aryl hydrocarbon hydroxylase activity and primordial oocyte toxicity of polycyclic aromatic hydrocarbons in mice.'' ''Cancer Research.'' 39:3471–3475. (1979).

(5) Pederson, T. and Peters, H. ''Proposal for classification of oocytes and follicles in the mouse ovary.'' ''Journal of Reproduction and Fertility.'' 17:555–557. (1968).

(6) Spencer, P.S., Bischoff, M., and Schaumburg, H.H. ''Neuropathological methods for the detection of neurotoxic disease.'' In: ''Experimental and Clinical Neurotoxicology.'' Spencer, P.S. and Schaumburg, H.H., eds. Baltimore, MD: Williams and Wilkins, pp. 743–757 (1980).

(7) Hafez, E.S., ed., ''Reproduction and Breeding Techniques for Laboratory Animals.'' Chapter 10. Philadelphia: Lea and Febiger. (1970).

(e) *Effective dates.* (1) The effective date of this final rule is October 27, 1989.

(2) The guidelines and other test methods cited in this section are referenced here as they exist on October 27, 1989.

[54 FR 37808, Sept. 13, 1989, as amended at 58 FR 34205, June 23, 1993]

§ 799.3300 Unsubstituted phenylenediamines.

(a) *Identification of test substance.* (1) The unsubstituted phenylenediamines (pda's), *para*-phenylenediamine (*p*-pda, CAS No. 106–50–3), or its sulfate salt (*p*-pda.H_2SO_4, CAS No. 1624–57–75), *meta*-phenylenediamine (*m*-pda, CAS No. 108–45–2), or its sulfate salt (*m*-pda.H_2SO_4, CAS No. 54–17–08), and *ortho*-phenylenediamine (*o*-pda, CAS No. 95–54–5) shall be tested in accordance with this section.

(2) *p*-Pda, *m*-pda, and *o*-pda of at least 98 percent purity shall be used as the test substances. Either the hydrochloride or sulfate salt of *m*-pda shall be used as the test substances. Either the hydrochloride or sulfate salt of *m*-pda shall be used as a test substance in the oncogenicity test in paragraph (c)(2) of this section if the free base proves to be unstable under the conditions of this study. Either the hydrochloride or sulfate salt of *o*-pda, *p*-pda, or *m*-pda shall be used as a test substance in the 90-day subchronic neurotoxicity studies in paragraph (c)(3)(B) of this section if the free base proves to be unstable under the conditions of these studies. The salt(s) shall be of at least 98 percent purity.

(b) *Persons required to submit study plans, conduct tests, and submit data.* (1) All persons who manufacture (including import or by-product manufacture) or process *m*-pda or *m*-pda.H_2SO_4, or intend to manufacture or process *m*-pda or *m*-pda.H_2SO_4, after the effective date of this rule to the end of the reimbursement period shall submit letters of intent to test, submit study plans, conduct tests, and submit data, or submit exemption applications as specified in paragraphs (c), (d), and (e) of this section, subpart A of this part, and parts 790 and 792 of this chapter for single-phase rulemaking.

(2) All persons who manufacture (including import or by-product manufacture) or process *p*-pda, or *p*-pda.H_2SO_4, or intend to manufacture or process *p*-pda, or *p*-pda H_2SO_4, after the effective date of this rule to the end of the reimbursement period shall submit letters of intent to test, submit study plans, conduct tests, and submit data, or submit exemption applications as specified in paragraphs (c)(3), (d), and (e) of this section, subpart A of this part and parts 790 and 792 of this chapter for single-phase rulemaking.

(3) All persons who manufacture (including import or by-product manufacture) or process *o*-pda, or intend to manufacture or process *o*-pda after the effective date of this rule to the end of the reimbursement period shall submit letters of intent to test, submit study plans, conduct tests, and submit data, or submit exemption applications as specified in paragraphs (c)(3), (d), and (e) of this section, subpart A of this part, and parts 790 and 792 of this chapter for single-phase rulemaking.

(c) *Health effects testing*—(1) *Mutagenicity testing*—(i) *Required testing.* (A) The sex-linked recessive lethal (SLRL) assay shall be conducted, by injection, in *Drosophila melanogaster* with *m*-pda in accordance with § 798.5275 of this chapter.

(B) If the SLRL assay conducted pursuant to paragraph (c)(1)(i)(A) of this section is positive, either the mouse visible specific locus test (MVSL) or the mouse biochemical specific locus test (MBSL) shall be conducted for *m*-pda by gavage in accordance with §§ 798.5200 or 798.5195 of this chapter, if after public program review, EPA issues a FEDERAL REGISTER notice or sends a certified letter to the test sponsor(s) specifying that testing shall be initiated. The test sponsor shall notify EPA of its choice in writing in its first interim report.

(C) The mouse bone marrow cytogenetics: micronucleus (MBMC) assay shall be conducted on *m*-pda in accordance with § 798.5395 of this chapter.

(D) If the MBMC assay conducted pursuant to paragraph (c)(1)(i)(C) of this section is positive, the dominant lethal assay (DL) in mice shall be conducted on *m*-pda pursuant to § 798.5450 of this chapter.

(E) If the DL conducted pursuant to paragraph (c)(1)(i)(D) of this section is positive, heritable translocation (HT) testing in the mouse on *m*-pda shall be conducted pursuant to § 798.5460 of this chapter, if after a public program review, EPA issues a FEDERAL REGISTER notice or sends a certified letter to the test sponsor(s) specifying that testing shall be initiated.

(ii) *Reporting requirements.* (A) The tests shall be completed and the final reports for the MBMC assay shall be submitted to the EPA no later than January 16, 1991. The final report for the SLRL in *Drosophila melanogaster* shall be submitted no later than April 15, 1991.

(B) If required, the DL test shall be completed and the final report shall be received by EPA no later than 24 months after the effective date of this final rule.

(C) If required, the MVSL or the MBSL shall be completed and the final report shall be received by EPA no later than 51 months after EPA issues a FEDERAL REGISTER Notice or sends a certified letter to the test sponsor(s) identified under paragraph (c)(1)(i)(B) of this section specifying that testing shall be initiated.

(D) If required, the HT test shall be completed and the final report shall be submitted to EPA not later than 36 months after the date on which EPA notifies the test sponsor under paragraph (c)(1)(i)(E) of this section to begin testing.

(E) Interim reports for the SLRL assay and MBMC are required at 6-month intervals beginning 6 months after the effective date of this section. If the DL is triggered, interim reports are required at 6 month intervals beginning with the date of initiation of the study.

(F) Interim reports for the HT and either the MBSL or MVSL are required at 6–month intervals beginning 6 months after the date of notification by EPA that testing shall be initiated, and ending when the final report is submitted.

(2) *Oncogenicity*—(i) *Required testing.* A 2-year dermal oncogenicity bioassay shall be conducted with *m*-pda if, after public program review, EPA issues a FEDERAL REGISTER notice specifying that the testing shall be initiated.

(ii) [Reserved]

(iii) *Reporting requirements.* (A) The final results and final report for the oncogenicity bioassay shall be submitted to EPA no later than 53 months after EPA issues a FEDERAL REGISTER notice or sends a certified letter to the test sponsor under paragraph (c)(2)(i) of this section specifying that the testing shall be initiated.

(B) Interim reports for the oncogenicity study are required at 6-month intervals beginning 6 months after the date of notification by EPA that testing shall be initiated and ending when the final report is submitted.

(3) *Neurotoxicity*—(i) *Required testing.* (A) Acute neurotoxicity testing in the neurotoxicity functional observational battery (FOB) in accordance with § 798.6050 of this chapter, and the motor activity test (MAT) in accordance with § 798.6200 of this chapter, shall be conducted for *o*-, *m*-, and *p*-pda.

The test chemicals shall be administered in a single oral dose. Clinical observations shall be made at a minimum of 1, 4, 24, and 48 hours and at 7 days after dosing.

(B) If neurotoxic effects are observed at 24 hours, or longer, during the testing conducted pursuant to paragraph (c)(3)(i)(A) of this section, then 90-day subchronic neurotoxic FOB and MAT tests shall be conducted in accordance with §§ 798.6050 and 798.6200 of this chapter, respectively, for each isomer showing such effects. At the end of these tests, the animals shall be sacrificed and the nervous tissue preserved and examined as described in the neuropathology test standard, § 798.6400 of this chapter.

(ii) *Reporting requirements.* (A) The acute neurotoxicity tests shall be completed and the final report submitted to EPA no later than September 15, 1990. If triggered, the final report of the subchronic neurotoxicity testing and the neuropathological examination shall be submitted to EPA on the following schedules. If one isomer is triggered, the reporting deadline is July 15, 1990. If two isomers are triggered, the reporting deadline is January 15, 1992. If three isomers are triggered, the reporting deadline is July 15, 1992.

(B) [Reserved]

(d) *Chemical fate testing*—(1) *Indirect photolysis testing*—(i) *Required testing.* Indirect photolysis studies shall be conducted with *p*-, *m*-, and *o*-pda to determine the half-life in water of each of the three unsubstituted pda's in accordance with § 795.70 of this chapter.

(ii) *Reporting requirements.* (A) The final report shall be submitted to EPA no later than 8 months after the effective date of the final rule.

(B) The final report shall include a calculation of the predicted environmental concentration (PEC), 100×PEC, and 1,000×PEC for each isomer. PEC shall be calculated by using results from the indirect photolysis studies and solving the following equations for the appropriate isomer: *o*-pda: PECo = 0.3629 + 1.0468 log t 1/2; *m*-pda: PECm = 0.6830 + 1.9702 log t 1/2; *p*-pda: PECp = 0.0085 + 0.0024 log t 1/2, where PEC is the predicted concentration in ppb and t 1/2 is the half-life for oxidation (i.e., indirect photolysis) expressed in minutes. PEC, 100×PEC, and 1,000×PEC shall be used in the decision logic described in paragraph (e) of this section.

(2) [Reserved]

(e) *Environmental effects testing*—(1) *Acute toxicity* testing—(i) *Required testing.* (A) Flow-through fish acute toxicity tests in the rainbow trout (*Salmo gairdneri*) shall be conducted with *o*-, *m*-, and *p*-pda in accordance with § 797.1400 of this chapter.

(B) Acute flow-through studies on the freshwater invertebrate *Gammarus* shall be conducted with *o*-, *m*-, and *p*-pda in accordance with § 795.120 of this chapter.

(C) If the concentration affecting 50 percent of the population (LC_{50} or EC_{50}) for any study conducted pursuant to paragraphs (e)(1)(i)(A) and (B) of this section is less than or equal to 100×PEC, less than or equal to 1 milligram/liter (mg/L), or less than or equal to 100 mg/L and shows indications of chronicity, chronic toxicity testing shall be conducted pursuant to paragraph (e)(2) of this section. Indications of chronicity shall be the following: for fish or aquatic invertebrates, the ratio of 24 hour/96 hour LC_{50s} is greater than or equal to 2; for gammarids, the ratio of 24 hour/48 hour EC_{50s} is greater than or equal to 2.

(ii) *Reporting requirements.* The final reports for acute toxicity testing shall be submitted as follows:

(A) Testing on the rainbow trout shall be completed and submitted to EPA 9 months after the effective date of the final rule for *o*-pda and *p*-pda. Testing for *m*-pda shall be completed and submitted by January 15, 1991.

(B) The acute toxicity testing in freshwater *Gammarus* shall be completed and submitted no later than January 15, 1991.

(2) *Chronic toxicity testing*—(i) *Required testing.* (A) A fish partial life-cycle flow-through test shall be conducted in the more sensitive fish species, either *Pimephales promelas* or *Salmo gairdneri*, with each isomer, *o*-, *m*-, and *p*-pda, demonstrating an LC_{50}, determined by testing of fish pursuant to paragraph (e)(1)(i)(A) of this section, equal to or less than 100×PEC; or less than 1 mg/L; or less than 100 mg/L with indications of chronicity. Chronicity indicators are defined in paragraph

(e)(1)(i)(C) of this section. Testing shall be conducted in accordance with § 797.1600 of this chapter.

(B) An invertebrate life-cycle flow-through toxicity test shall be conducted in *Daphnia magna* for *o*- and *p*-pda in accordance with § 797.1330 of this chapter.

(ii) *Reporting requirements.* (A) The fish partial life-cycle flow-through test shall be completed and final results shall be submitted to EPA no later than December 1, 1992.

(B) The invertebrate life-cycle flow-through toxicity test shall be completed and the final report submitted to EPA no later than January 15, 1993.

(C) Progress reports shall be submitted at 6 month intervals after the effective date of the final rule.

(f) *Effective dates.* (1) The effective date of this final rule is January 16, 1990, except for paragraphs (c)(1)(i)(B), (c)(1)(ii)(A), (c)(1)(ii)(C), (c)(1)(ii)(F), (c)(3)(ii)(A), (e)(1)(ii), (e)(2)(ii)(A), and (e)(2)(ii)(B) of this section. The effective date for paragraphs (c)(1)(i)(B), (c)(1)(ii)(C), and (c)(1)(ii)(F) of this section is May 21, 1990. The effective date for paragraphs (c)(1)(ii)(A), (c)(3)(ii)(A), and (e)(1)(ii), of this section is May 21, 1991. The effective date for paragraph (e)(2)(ii)(A) is June 12, 1992. The effective date for paragraph (e)(2)(ii)(B) is May 28, 1993.

(2) The guidelines and other test methods cited in this rule are referenced as they exist on the effective date of the final rule.

[54 FR 49294, Nov. 30, 1989, as amended at 55 FR 12644, Apr. 5, 1990; 56 FR 23231, May 21, 1991; 57 FR 24961, June 12, 1992; 58 FR 30992, May 28, 1993; 58 FR 34205, June 23, 1993]

§ 799.4360 Tributyl phosphate.

(a) *Identification of test substance.* (1) Tributyl phosphate (TBP, CAS No. 126–73–8) shall be tested in accordance with this section.

(2) TBP of at least 99 percent purity shall be used as the test substance.

(b) *Persons required to submit study plans, conduct tests, and submit data.* All persons who manufacture (including import and byproduct manufacture) or process or intend to manufacture or process TBP, other than as an impurity, from the effective date of the final rule to the end of the reimbursement period shall submit letters of intent to conduct testing, submit study plans, conduct tests, and submit data, or submit exemption applications as specified in this section, subpart A of this part, and part 790 of this chapter for single-phase rulemaking.

(c) *Health effects testing*—(1) *Neurotoxicity*—(i) *Required testing.* (A)(*1*) An acute and subchronic functional observational battery shall be conducted with TBP in accordance with § 798.6050 of this chapter except for the provisions of paragraphs (d) (5) and (6) of § 798.6050.

(*2*) For the purpose of this section, the following provisions also apply:

(*i*) *Animal selection.* Testing shall be performed in laboratory rats.

(*ii*) *Duration of testing.* For the acute testing, the substance shall be administered over a period not to exceed 24 hours; for the subchronic testing, test species shall be exposed daily for at least 90 days.

(*iii*) *Route of exposure.* Animals shall be exposed to TBP orally.

(B)(*1*) An acute and subchronic motor activity test shall be conducted with TBP in accordance with § 798.6200 of this chapter except for the provisions of paragraphs (d) (5) and (6) of § 798.6200.

(*2*) For the purpose of this section, the following provisions also apply:

(*i*) *Animal selection.* Testing shall be performed in laboratory rats.

(*ii*) *Duration of testing.* For the acute testing, the substance shall be administered over a period not to exceed 24 hours; for the subchronic testing, test species shall be exposed daily for at least 90 days.

(*iii*) *Route of administration.* Animals shall be exposed to TBP orally.

(C)(*1*) A neuropathology test shall be conducted with TBP in accordance with § 798.6400 of this chapter except for the provision of paragraphs (d)(1)(i) (5) and (6) of § 798.6400.

(*2*) For the purpose of this section, the following provisions also apply:

(*i*) *Animal selection.* Testing shall be performed in laboratory rats.

(*ii*) *Duration of testing.* Animals shall be exposed for at least a 90-day period.

(*iii*) *Route of administration.* Animals shall be exposed to TBP orally.

(ii) *Reporting requirements*—(A) The neurotoxicity tests required under

paragraph (c)(1)(i) (A), (B), and (C) of this section shall be completed and final reports submitted to EPA within 18 months of the effective date of the final rule.

(B) An interim progress report for these neurotoxicity tests shall be submitted to EPA 6 months after the effective date of the final rule.

(2) *Developmental toxicity*—(i) *Required testing.* (A) A developmental toxicity study shall be conducted with TBP in accordance with § 798.4900 of this chapter, except for the provisions of paragraph (e)(5) of § 798.4900.

(B) for the purpose of this section, the following provision also applies:

(*1*) *Route of administration.* The animals shall be exposed to TBP by gavage.

(*2*) [Reserved]

(ii) *Reporting requirements.* (A) The developmental toxicity study required under paragraph (c)(2) of this section shall be completed and a final report submitted to EPA by January 27, 1991.

(B) An interim progress report shall be submitted to EPA 6 months after the effective date of the final rule.

(3) *Reproductive and fertility*—(i) *Required testing.* (A) A reproduction and fertility study shall be conducted with TBP in accordance with § 798.4700 of this chapter, except for the provisions of paragraph (c)(5)(i)(A) of § 798.4700.

(B) for the purpose of this section, the following provisions also apply:

(*1*) *Route of administration.* Animals should be exposed to TBP by gavage.

(*2*) [Reserved]

(ii) *Reporting requirements.* (A) The reproduction and fertility effects study required under paragraph (c)(3) of this section shall be completed and a final report submitted to EPA by August 17, 1992.

(B) Interim program reports shall be submitted to EPA at 6 month intervals, beginning 6 months after the effective date of the final rule, until the final report is submitted to EPA.

(4) *Mutagenic effects—Gene mutation*—(i) *Required testing.* (A) A detection of gene mutation in somatic cells in culture test shall be conducted with TBP in accordance with § 798.5300 of this chapter.

(B)(*1*) If TBP produces a positive result in the assay conducted pursuant to paragraph (c)(4)(i)(A) of this section, a sex-linked recessive lethal test in *Drosophila melanogaster* shall be conducted with TBP in accordance with § 798.5275 of this chapter, except for the provisions of paragraph (d)(5)(iii) of § 798.5275.

(*2*) For the purpose of this section, the following provisions also apply:

(*i*) *Route of administration.* Animals shall be exposed to TBP orally.

(*ii*) [Reserved]

(*iii*) *Reporting requirements.* (*A*) The somatic cells in culture assay shall be completed and the final report submitted to EPA, within 10 months after the effective date of the final rule. If required, the *Drosophila* sex-linked recessive lethal assay shall be completed and the final report submitted to EPA within 22 months after the effective date of the final rule.

(*B*) Interim progress reports shall be submitted to EPA at 6 month intervals beginning 6 months after initiation of the sex-linked recessive lethal test in *Drosophila* until the applicable final reports are submitted to EPA.

(5) *Mutagenic effects—Chromosomal aberration*—(i) *Required testing.* (A) An in vitro mammalian cytogenetics test shall be conducted with TBP in accordance with § 798.5375 of this chapter.

(B)(*1*) If TBP produces a negative result in the in vitro cytogenetics test conducted pursuant to paragraph (c)(5)(i)(A) of this section, an in vivo mammalian bone marrow cytogenetics test shall be conducted with TBP in accordance with § 798.5385 of this chapter, except for the provisions of paragraph (d)(5)(iii) of § 798.5385.

(*2*) For the purpose of this section, the following provisions also apply:

(*i*) *Route of administration.* Animals shall be exposed to TBP orally.

(*ii*) [Reserved]

(C)(*1*) If TBP produces a positive result in either the in vitro or the in vivo cytogenetics test conducted pursuant to paragraphs (c)(5)(i) (A) and (B) of this section, a rodent dominant-lethal assay shall be conducted with TBP in accordance with § 798.5450 of this chapter, except for the provisions of paragraph (d)(5)(iii) of § 798.5450.

(*2*) For the purpose of this section, the following provisions also apply:

(*i*) *Route of administration.* Animals shall be exposed orally to TBP.

(*ii*) [Reserved]

(D)(*1*) A rodent heritable trans- location assay shall be conducted with TBP if the dominant-lethal assay conducted for TBP pursuant to paragraph (c)(5)(i)(C) of this section produces a positive result, and if, after a public program review, EPA issues a FEDERAL REGISTER notice or sends a certified letter to the test sponsor specifying that the testing shall be initiated. This test shall be conducted in accordance with § 798.5460 of this chapter except for the provisions of paragraph (d)(5)(iii) of § 798.5460.

(*2*) For the purpose of this section, the following provisions also apply:

(*i*) *Route of administration.* Animals shall be exposed to TBP orally.

(*ii*) [Reserved]

(ii) *Reporting requirements.* (A)(*1*) The in vitro mammalian cytogenetics test shall be completed and the final report submitted to EPA within 10 months after the effective date of the final rule.

(*2*) If required, the in vivo mammalian bone-marrow cytogenetics test shall be completed and the final report submitted to EPA within 24 months after the effective date of the final rule.

(*3*) If required, the dominant lethal assay shall be completed and the final report submitted to EPA within 36 months after the effective date of the final rule.

(*4*) If required, the heritable translocation assay shall be completed and the final report submitted to EPA within 25 months after the date of EPA's notification of the test sponsor under paragraph (c)(5)(i)(D) of this section that testing shall be initiated.

(B) Interim progress reports shall be submitted to EPA at 6 month intervals beginning 6 months after initiation of the rodent dominant lethal assay and the rodent heritable translocation assay respectively, if required, until the applicable final reports are submitted to EPA.

(6) *Oncogenicity*—(i) *Required testing.* (A) An oncogenicity test shall be conducted with TBP in accordance with § 798.3300 of this chapter except for the provisions of paragraphs (b)(1)(i), (b)(6)(i) and (b)(9), of § 798.3300.

(B) For the purpose of this section, the following provisions also apply:

(*1*) *Animal selection.* TBP shall be tested in Sprague-Dawley rats and in mice.

(*2*) *Route of administration.* Animals shall be exposed to TBP orally.

(*3*) *Clinical examinations.* At 12 months, 18 months and during month 24, a blood smear shall be obtained from all animals. A differential blood count shall be performed on blood smears from those animals in the highest dosage group and the controls. If these data, or data from the pathological examination indicate a need, then the 12– and 18–month blood smears from other dose levels shall also be examined. Differential blood counts shall be performed for the next lower group(s) if there is a major discrepancy between the highest group and the controls. If clinical observations suggest a deterioration in health of the animals during the study, a differential blood count of the affected animals shall be performed.

(ii) *Reporting requirements.* (A) The oncogenicity test required under paragraph (c)(6) of this section shall be completed and a final report submitted to EPA within 53 months of the effective date of the final rule.

(B) Interim progress reports shall be submitted to EPA at 6 month intervals beginning 6 months after the effective date of the final rule, until the final report is submitted to EPA.

(7) *Dermal sensitization*—(i) *Required testing.* A dermal sensitization test shall be conducted with TBP in accordance with § 798.4100 for this chapter.

(ii) *Reporting requirements.* The dermal sensitization test shall be completed and the final report submitted to EPA within 6 months of the effective date of the final rule.

(8) *Oral/Dermal Pharmacokinetics*—(i) *Required testing.* (A) A pharmaco- kinetics test shall be conducted with TBP in accordance with § 795.228 of this chapter, except for the provisions of paragraphs (c)(1)(iii)(B), (c)(2)(ii)(C)(*1*) and (c)(2)(ii)(C)(*2*) of § 795.228.

(B) For the purposes of this section, the following provisions also apply:

(*1*) *Animal care.* During the acclimatization period, the animals shall be

housed in suitable cages. All animals shall be provided with certified feed and tap water *ad libitum*.

(*2*) *Dermal treatment.* For dermal treatment, two doses, comparable to the low and high oral doses, shall be dissolved in a suitable vehicle and applied in volumes adequate to deliver comparable doses. The backs of the animals should be lightly clipped with an electric clipper 24 hours before treatment. The test substance shall be applied to the intact clipped skin (approximately 2 cm^2 for rats, 40 cm^2 for mini-pigs). The dosed areas shall be protected with a suitable porous covering which is secured in place, and the animals shall be housed separately.

(ii) *Reporting requirements.* (A) The pharmacokinetics test required in paragraph (c)(8)(i) of this section shall be completed and the final report submitted to EPA by December 26, 1992.

(B) Interim 6 month progress reports shall be submitted to EPA beginning at 6 months after the effective date of the final rule and continuing until submission of the final report.

(d) *Environmental effects testing*—(1) *Algal acute toxicity*—(i) *Required testing.* (A) Algal acute toxicity testing shall be conducted with TBP using *Selenastrum capricornutum* in accordance with § 797.1050 of this chapter except for the provisions of paragraphs (c)(6)(i)(A),(B), and (ii) of § 797.1050.

(B) For the purpose of this section, the following provisions also apply:

(*1*) *Summary of the test.* The algal cells at the end of 24, 48, and 72 hours shall be enumerated.

(*2*) *Chemical measurement.* The final separation of the algal cells from the test solution shall be done using an ultrafiltration (e.g., 0.45 micrometer pore size) technique. The total and dissolved (e.g., filtered) concentrations of the test substance shall be measured in each test chamber and the delivery chamber before the test and in each test chamber at 0 and 96 hours.

(ii) *Reporting requirements.* The algal acute toxicity test required in paragraph (d)(1) of this section shall be completed and the final report submitted to EPA within 9 months of effective date of the final rule.

(2) *Fish acute toxicity*—(i) *Required testing.* (A) Fish acute toxicity testing shall be conducted with TBP using *Salmo gairdneri* (rainbow trout) in accordance with § 797.1400 of this chapter.

(B) For the purpose of this section, the following provisions also apply:

(*1*) *Chemical measurement.* The total and dissolved (e.g., filtered) concentrations of the test substance shall be measured in each test chamber delivery chamber before the test. If the dissolved test substance concentration is greater than 80 percent of total test substance concentration, then only total or dissolved test concentration shall be measured in each chamber at 0, 48, and 96 hours. If the dissolved test substance concentration is less than or equal to 80 percent of total test substance, then total and dissolved test substance concentration shall be measured at 0, 48 and 96 hours.

(*2*) *Test procedures.* The test shall be performed under flow-through conditions.

(ii) *Reporting requirements.* The fish acute toxicity test shall be completed and the final report submitted to EPA within 9 months of the effective date of the final rule.

(3) *Daphnid acute toxicity*—(i) *Required testing.* (A) Daphnid acute toxicity testing shall be conducted with TBP using *Daphnia magna* or *D. pulex* in accordance with § 797.1300 of this chapter.

(B) For the purpose of this section, the following provisions also apply:

(*1*) *Chemical measurement.* The total and dissolved (e.g., filtered) concentrations of the test substance shall be measured in each test chamber and the delivery chamber before the test. If the dissolved test substance concentration is greater than 80 percent of total test substance concentration, then only total or dissolved test concentration shall be measured in each chamber at 0, 24, and 48 hours. If the dissolved test substance concentration is less than or equal to 80 percent of total test substance, then total and dissolved test substance concentration shall be measured at 0, 29, and 48 hours.

(*2*) *Test procedures.* The test shall be performed under flow-through conditions.

(ii) *Reporting requirements.* The daphnid acute toxicity test shall be

completed and the final report submitted to EPA within 9 months of the effective date of the final rule.

(4) *Gammarid acute toxicity*—(i) *Required testing.* (A) *Gammarid* acute toxicity testing shall be conducted with TBP using *Gammarus lacustris, G. fasciatus,* or *G. pseudolimnaeus* in accordance with §795.120 of this chapter.

(B) For the purpose of this section, the following provisons also apply:

(*1*) *Chemical measurement.* The total and dissolved (e.g., filtered) concentrations of the test substance shall be measured in each test chamber and the delivery chamber before the test. If the dissolved test substance concentration is greater than 80 percent of total test substance concentration, then only total or dissolved test concentration shall be measured in each chamber at 0, 48, and 96 hours. If the dissolved test substance concentration is less than or equal to 80 percent of total test substance, then total and dissolved test substance concentration shall be measured at 0, 48, and 96 hours.

(*2*) *Test procedures.* The test shall be performed under flow-through conditions.

(ii) *Reporting requirements.* The *Gammarid* acute toxicity test shall be completed and the final report submitted to EPA within 9 months of the effective date of the final rule.

(5) *Daphnid chronic toxicity*—(i) *Required testing.* (A) Daphnid chronic toxicity testing shall be conducted with TBP using *Daphnia magna* or *D. pulex* in accordance with §797.1330 of this chapter, if the algal EC50, the rainbow trout LC50, the daphnid EC50, or the gammarid LC50 determined in accordance with paragraphs (d)(1), (2), (3) and (4) of this section satisfy the following criteria: Any such value is ≤ 1 mg/L; or any fish or aquatic invertebrate EC50 or LC50 is ≤ 100 mg/L and either the rainbow trout or gammarid 24-hour to 96-hour LC50 ratio ≥ 2, or the daphnid 24-hour to 48-hour EC50 or LC50 ratio is ≥ 2.

(B) For the purpose of this section, the following provisions also apply:

(*1*) *Chemical measurement.* The total and dissolved (e.g., filtered) concentrations of the test substance shall be measured in each test chamber and the delivery chamber before the test. If the dissolved test substance concentration is greater than 80 percent of total test substance concentration, then only total or dissolved test substance concentration shall be measured in each test chamber at 0, 7, 14, and 21 days. If the dissolved test substance concentration is less than or equal to 80 percent of total test substance concentration, then total and dissovled test substance concentration shall be measured at 0, 7, 14, and 21 days.

(*2*) *Test procedures.* The test shall be performed under flow-through conditions.

(ii) *Reporting requirements.* (A) The daphnid chronic toxicity test, if required, shall be completed and the final report submitted to EPA by September 27, 1991.

(B) An interim progress report shall be submitted to EPA 6 months after the initiation of the test.

(6) *Fish early-life stage toxicity*—(i) *Required testing.* A fish early-life stage toxicity test shall be conducted with TBP in accordance with §797.1600 of this chapter, using the fish with the lower LC50 value (either the rainbow trout (*Salmo gairdneri*) or the fathead minnow (*Pimephales promelas*)), if the algal EC50, the rainbow trout LC50, the gammarid LC50 or the daphnid EC50 determined in accordance with paragraphs (d)(1), (2), (3), and (4) of this section satisfy the following criteria: Any such value is ≤ 1 mg/L; or any fish or aquatic invertebrate EC50 or LC50 is ≤ 100 mg/L and either the rainbow trout or gammarid 24 hour to 96 hour LC50 ratio ≥ 2, or the daphnid 24-hour to 48-hour EC50 or LC50 ratio is ≥ 2.

(ii) *Reporting requirements.* (A) The fish early-life stage flow-through toxicity test shall be completed and the final report submitted to EPA by December 27, 1991.

(B) An interim progress report shall be submitted to EPA 6 months after the initiation of the test.

(7) *Benthic sediment invertebrate bioassay*—(i) *Required testing.* (A) A benthic sediment invertebrate bioassay shall be conducted on TBP with the midge (*Chironomus tentans*) if chronic toxicity testing is required pursuant to paragraph (d)(5) of this section and if the log Koc calculated according to paragraph (e)(2)(B)(*1*) of this section is

greater than or equal to 3.5 but less than or equal to 6.5. The total aqueous sediment concentrations and interstitial water concentrations of the test substance shall be measured in each test chamber at 0, 4, 7, 10, and 14 days. The aqueous concentrations of the test substance in the delivery chamber shall be measured at 0, 4, 7, 10, and 14 days. TBP-spiked clean freshwater sediments containing low, medium, and high organic carbon content shall be used.

(B) The benthic sediment invertebrate bioassay shall be conducted according to the test procedure specified in the American Society for Testing and Materials, Special Technical Publication 854 (ASTM STP 854) entitled, ''Aquatic Safety Assessment of Chemicals Sorbed to Sediments,'' by W.J. Adams, R.A. Kimerle, and R.G. Mosher, published in *Aquatic Toxicity and Hazard Assessment: Seventh Symposium*, ASTM STP 854, pp. 429–453, R.D. Caldwell, R. Purdy, and R.C. Bahner, Eds., 1985 which is incorporated by reference. This published procedure is available for public inspection at the National Archives and Records Administration (NARA). For information on the availability of this material at NARA, call 202–741–6030, or go to: *http://www.archives.gov/federal_register/code_of_federal_regulations/ibr_locations.html.* Copies may be obtained from the Non-Confidential Information Center (NCIC) (7407), Office of Pollution Prevention and Toxics, U.S. Environmental Protection Agency, Room B–607 NEM, 401 M St., SW., Washington, DC 20460, between the hours of 12 p.m. and 4 p.m. weekdays excluding legal holidays. This incorporation by reference was approved by the Director of the Federal Register in accordance with 5 U.S.C. 522(a) and 1 CFR part 51. The method is incorporated as it exists on the effective date of this rule and a notice of any change to the method will be published in the FEDERAL REGISTER.

(ii) *Reporting requirements.* (A) The benthic sediment invertebrate bioassay, if required, shall be completed and the final report submitted to EPA within 21 months of the effective date of the final rule.

(B) An interim progress report shall be submitted to EPA for the benthic sediment invertebrate bioassy 6 months after the initiation of the test.

(e) *Chemical fate testing*—(1) *Vapor pressure*—(i) *Required testing.* Vapor pressure testing shall be conducted with TBP in accordance with § 796.1950 of this chapter.

(ii) *Reporting requirements.* The vapor pressure test required in paragraph (d)(1) of this section shall be completed and the final report submitted to EPA by September 27, 1990.

(2) *Sediment and soil adsorption isotherm*—(i) *Required testing.* Sediment and soil absorption isotherm testing shall be conducted with TBP in accordance with § 796.2750 of this chapter and EPA will provide two soil and two sediment samples.

(ii) *Reporting requirements.* (A) The sediment and soil absorption isotherm test required under paragraph (d)(2) of this section shall be completed and the final report submitted to EPA by September 27, 1990.

(B) For the purpose of this section, the following provisions also apply:

(*1*) A Koc value shall be calculated for each test sediment using the equation Koc=K/ (percent of organic carbon in test sediment).

(*2*) [Reserved]

(3) *Hydrolysis as a function of pH at 25 °C*—(i) *Required testing.* Hydrolysis testing shall be completed with TBP in accordance with § 796.3500 of this chapter.

(ii) *Reporting requirements.* The hydrolysis test required under paragraph (e)(3)(i) of this section shall be completed and the final report submitted to EPA by September 27, 1990.

(f) *Effective date.* (1) The effective date of this final rule is September 27, 1989, except for paragraphs (c)(2)(ii)(A), (c)(3)(ii)(A), (c)(6)(i)(A), (c)(6)(i)(B)(*3*), (c)(8)(i), (c)(8)(ii)(A), (d)(5)(ii)(A), (d)(6)(ii)(A), (e)(1)(ii), (e)(2)(ii)(A), and (e)(3)(ii) of this section. The effective date for paragraphs (c)(2)(ii)(A), (c)(3)(ii)(A), (c)(8)(i), (e)(1)(ii), (e)(2)(ii)(A), and (e)(3)(ii) of this section is May 21, 1991. The effective date for (c)(8)(ii)(A), (d)(5)(ii)(A), and (d)(6)(ii)(A) of this section is June 12, 1992. The effective date for (c)(6)(i)(A), (c)(6)(i)(B)(*3*), and (c)(8)(ii)(A) is May 28, 1993.

(2) The guidelines and other test methods cited in this rule are referenced as they exist on the effective date of the final rule.

[54 FR 33413, Aug. 14, 1989; 56 FR 23231, May 21, 1991, as amended at 57 FR 24961, June 12, 1992; 58 FR 30992, May 28, 1993; 58 FR 34205, June 23, 1993; 60 FR 34467, July 3, 1995; 69 FR 18803, Apr. 9, 2004]

§ 799.4440 Triethylene glycol monomethyl ether.

(a) *Identification of test substance.* (1) Triethylene glycol monomethyl ether (TGME, CAS No. 112–35–6) shall be tested in accordance with this section.

(2) TGME of at least 90 percent purity shall be used as the test substance.

(b) *Persons required to submit study plans, conduct tests, and submit data.* All persons who manufacture or process TGME, other than as an impurity, after May 17, 1989, to the end of the reimbursement period shall submit letters of intent to conduct testing, submit study plans, conduct tests and submit data, or submit exemption applications as specified in this section, subpart A of this part, and parts 790 and 792 of this chapter for single-phase rulemaking.

(c) *Developmental neurotoxicity*—(1) *Required testing.* Developmental neurotoxicity testing shall be performed in the Sprague-Dawley rat by gavage in accordance with § 795.250 of this chapter except for the provision in paragraph (c)(3)(iii) of § 795.250.

(2) For the purpose of this section, the following provisions also apply:

(i) *Number of animals.* The objective is for a sufficient number of pregnant rats to be exposed to ensure that an adequate number of offspring are produced for neurotoxicity evaluation. At least 24 litters are recommended at each dose level.

(ii) *Dose levels and dose selection.* In the absence of developmental toxicity or maternal toxicity the maximum dose shall be 5 grams/kilogram.

(3) *Reporting requirements*—(i) The developmental neurotoxicity test shall be completed and the final report submitted to EPA within 21 months of the initiation of the test.

(ii) Progress reports shall be submitted to EPA at 6- month intervals, beginning six months after the initiation of the test.

(d) *Effective date.* (1) The effective date of this final rule is May 17, 1989, except for paragraph (c)(2)(i) and (c)(3)(i) of this section. The effective date for paragraph (c)(2)(ii) and (c)(3)(i) of this section is May 21, 1991.

(2) The guidelines and other test methods cited in this rule are referenced as they exist on the effective date of the final rule.

[54 FR 13477, Apr. 3, 1989; 56 FR 23232, May 21, 1991, as amended at 58 FR 34205, June 23, 1993]

Subpart C—Testing Consent Orders

§ 799.5000 Testing consent orders for substances and mixtures with Chemical Abstract Service Registry Numbers.

This section sets forth a list of substances and mixtures which are the subject of testing consent orders adopted under 40 CFR part 790. Listed below in Chemical Abstract Service (CAS) Registry Number order are the substances and mixtures which are the subject of these orders and the FEDERAL REGISTER citations providing public notice of such orders.

CAS Number	Substance or mixture name	Testing	FR Publication Date
67–64–1	Acetone	Health effects	January 23, 1995.
71–55–6	1,1,1-Trichloroethane	Health effects	August 23, 1989.
78–83–1	Isobutyl alcohol	Health effects	January 23, 1995.
79–10–7	Acrylic Acid	Health effects	March 4, 1992.
84–74–2	Di-*n*-butyl phthalate	Environmental effects	January 9, 1989.
84–75–3	Di-*n*-hexyl phthalate	Environmental effects	January 9, 1989.
		Chemical fate	January 9, 1989.
100–40–3	4-Vinylcyclohexene	Health effects	September 23, 1991.
		Chemical fate	September 23, 1991.
106–91–2	Glycidyl methacrylate	Health effects	January 26, 1995.
108–10–1	Methyl isobutyl ketone	Health effects	January 23, 1995.
109–99–9	Tetrahydrofuran	Health effects	January 23, 1995.

CAS Number	Substance or mixture name	Testing	FR Publication Date
110–82–7	Cyclohexane	Health Effects and Environmental Releases Report.	November 18, 1994.
112–35–6	Triethylene glycol monomethyl ether	Health effects	April 3, 1989.
112–50–5	Triethylene glycol monoethyl ether	Health effects	April 3, 1989.
117–81–7	Di-2-ethylhexyl phthalate	Chemical fate	January 9, 1989.
119–06–2	Ditridecyl phthalate	Chemical fate	January 9, 1989.
123–86–4	*N*-butyl acetate	Health effects	January 23, 1995.
131–11–3	Dimethly phthalate	Environmental effects	January 9, 1989.
141–78–6	Ethyl acetate	Health effects	January 23, 1995.
141–79–7	Mesityl oxide	Health effects	September 5, 1991.
143–22–6	Triethylene glycol monobutyl ether	Health effects	January 9, 1989.
143–33–9	Sodium cyanide	Chemical fate	December 17, 1991.
		Terrestrial effects	December 17, 1991.
556–67–2	Octamethylcyclo-tetrasiloxane	Chemical fate	January 10, 1989.
		Environmental effects	January 10, 1989.
628–63–7	*N*-amyl acetate	Health effects	January 23, 1995.
872–50–4	*N*- methylpyrrolidone	Health effects	November 23, 1993.
994–05–8	Tertiary-amyl methyl ether	Health effects	March 21, 1995.
1634–04–4	Methyl tert-butyl ether	Health effects	March 31, 1988.
2461–18–9	Lauryl glycidyl ether[1]	Health effects	June 11, 1996.
3618–72–2	C.I. Disperse Blue 79:1 Acetamide,*N*-[5-[bis[2-(acetyloxy) ethyl]amino]-2-[(2-bromo-4, 6-dinitrophenyl) azo]-4-methoxyphenyl]-.	Health effects	November 21, 1989.
		Environmental effects	November 21, 1989.
3648–20–2	Diundecyl phthalate	Environmental effects	January 9, 1989.
4170–30–3	Crotonaldehyde	Environmental effects	November 9, 1989.
		Chemical fate	November 9, 1989.
4675–54–3	Bisphenol A diglycidyl ether	Health effects	August 1, 1994.
		Exposure evaluation	
15965–99–8	Hexadecyl glycidyl ether[1]	Health effects	June 11, 1996.
16245–97–9	*n*-Octadecyl glycidyl ether[1]	Health effects	June 11, 1996.
26761–40–0	Diisodecyl phthalate	Chemical fate	January 9, 1989.
38954–75–5	Tetradecyl glycidyl ether[1]	Health effects	June 11, 1996.
68081–84–5	Alkyl (C_{10}-C_{16}) glycidyl ether[1]	Health effects	June 11, 1996.
68515–47–9	Ditridecyl phthalate (mixed isomers)	Chemical fate	January 9, 1989.
68515–49–1	Diisodecyl phthalate (mixed isomers)	Chemical fate	January 9, 1989.
68515–50–4	Dihexyl phthalate (mixed isomers)	Environmental effects	January 9, 1989.
		Chemical fate	January 9, 1989.
68609–97–2	Alkyl (C_{12}-C_{14}) glycidyl ether[1]	Health effects	June 11, 1996.
84852–15–3*	4-Nonylphenol, branched	Environmental effects	February 21, 1990.
		Chemical fate	February 21, 1990.
120547-52-6	Alkyl (C_{12}-C_{13}) glycidyl ether	Health effects	March 22, 1996.
142844–00–6	Refractory ceramic fibers	Exposure monitoring	May 14, 1993.

[1] As represented by alkyl (C_{12}-C_{13}) glycidyl ether (CAS No. 120547–52–6)

[57 FR 18829, May 1, 1992, as amended at 57 FR 24961, June 12, 1992; 58 FR 28520, May 14, 1993; 58 FR 34205, June 23, 1993; 58 FR 61816, Nov. 23, 1993; 59 FR 38920, Aug. 1, 1994; 59 FR 59663, Nov. 18, 1994; 60 FR 4519, Jan. 23, 1995; 60 FR 5140, Jan. 26, 1995; 60 FR 14911, Mar. 21, 1995; 60 FR 31924, June 19, 1995; 61 FR 11742, Mar. 22, 1996; 61 FR 29487, June 11, 1996]

§ 799.5025 Testing consent orders for mixtures without Chemical Abstracts Service Registry Numbers.

This section sets forth a list of mixtures (with no Chemical Abstracts Service Registry Numbers) which are the subject of testing consent orders adopted under 40 CFR part 790. Listed below are the mixtures which are the subject of these orders and the FEDERAL REGISTER citations providing public notice of such orders.

Mixture/substance	Required test	FR citation
Di(heptyl, nonyl, undecyl) phthalate (D711P) as a mixture of the following six substances:		
(1) diheptyl phthalate (branched and linear isomers), CAS No. 68515–44–6	Environmental effects.	January 9, 1989.

Mixture/substance	Required test	FR citation
(2) dinonyl phthalate (branched and linear isomers), CAS No. 68515–45–7	.....do	Do.
(3) di(heptyl, nonyl) phthalate (branched and linear isomers), CAS No. 111381–89–6	.....do	Do.
(4) diundecyl phthalate (branched and linear isomers), CAS No. 3648–20–2	.....do	Do.
(5) di(heptyl, undecyl) phthalate (branched and linear isomers), CAS No., 111381–90–9	.....do	Do.
(6) di(nonyl, undecyl) phthalate (branched and linear isomers), CAS No. 111381–91–0)	.....do	Do.
Fluoropolymer composite substance:		
(1) For Dry Non-Melt Resin containing the following chemical substances as specified in the ECA:		
(i) Ethene, tetrafluoro-, homopolymer, CAS No. 9002–84–0	Environmental effects.	July 8, 2005.
(ii) Polytetrafluoroethylene, Document Control Number (DCN) 63040000018A	.....do	Do.
(iii) Propane, 1,1,1,2,2,3,3-heptafluoro-3-[(trifluoroethenyl)oxy]-, polymer with tetrafluoroethene, CAS No. 26655–00–5	.....do	Do.
(2) For Dry Melt Fluoropolymer Resin containing the following chemical substances as specified in the ECA:		
(i) 1-Propene, 1,1,2,3,3,3-hexafluoro-, polymer with tetrafluoroethene, CAS No. 25067–11–2	.....do	Do.
(ii) Propane, 1,1,1,2,2,3,3-heptafluoro-3-[(trifluoroethenyl)oxy]-, polymer with tetrafluoroethene, CAS No. 26655–00–5	.....do	Do.
(iii) Ethene, tetrafluoro-, polymer with trifluoro(pentafluoroethoxy)ethene, CAS No. 31784–04–0	.....do	Do.
(iv) 1-Propene, 1,1,2,3,3,3-hexafluoro-, polymer with 1,1-difluoroethene and tetrafluoroethene, CAS No. 25190–89–0	.....do	Do.
(v) ETFE, DCN 63040000026	.....do	Do.
(vi) 1-Propene, 1,1,2,3,3,3-hexafluoro-, polymer with ethene and tetrafluoroethene, CAS No. 35560–16–8	.....do	Do.
(3) For Dry Non-Melt Fluoroelastomer Resin/Gum containing the following chemical substances as specified in the ECA:		
(i) 1-Propene, 1,1,2,3,3,3-hexafluoro-, polymer with 1,1-difluoroethene, CAS No. 9011–17–0	.....do	Do.
(ii) 1-Propene, 1,1,2,3,3,3-hexafluoro-, polymer with 1,1-difluoroethene and tetrafluoroethene, CAS No. 25190–89–0	.....do	Do.
(iii) 1-Propene, polymer with 1,1- difluoroethene and tetrafluoroethene, CAS No. 54675–89–7	.....do	Do.
(iv) 1-Propene, polymer with tetrafluoroethene, CAS No. 27029–05–6	.....do	Do.
(v) Ethene, tetrafluoro-, polymer with trifluoro(trifluoromethoxy) ethene, CAS No. 26425–79–6	.....do	Do.
(vi) Ethene, chlorotrifluoro-, polymer with 1,1-difluoroethene, CAS No. 9010–75–7	.....do	Do.
(vii) Fluoroelastomer, DCN No. 63040000018C	.....do	Do.
(viii) Fluoroelastomer DCN 63040000018D	.....do	Do.
(ix) A low temperature fluoroelastomer, ACC No. 137678	.....do	Do.
(4) For Aqueous Fluoropolymer Dispersions containing the following chemical substances as specified in the ECA:		
(i) Ethene, tetrafluoro-, homopolymer, CAS No. 9002–84–0	.....do	Do.
(ii) 1-Propene, 1,1,2,3,3,3-hexafluoro-, polymer with tetrafluoroethene, CAS No. 25067–11–2	.....do	Do.
(iii) Propane, 1,1,1,2,2,3,3-heptafluoro-3- [(trifluoroethenyl)oxy]-, polymer with tetrafluoroethene, CAS No. 26655–00–5	.....do	Do.
(iv) 1-Propene, 1,1,2,3,3,3- hexafluoro-, polymer with 1,1-difluoroethene and tetrafluoroethene, CAS No. 25190–89–0	.....do	Do.
(v) Polytetrafluoroethylene, DCN No. 63040000018B	.....do	Do.
Fluorotelomer-based composite substance:		
(1) For Paper containing three of the following chemical substances as specified in the ECA:		

Mixture/substance	Required test	FR citation
(i) Perfluoroalkylethyl acrylate copolymer, EPA-designated accession number (ACC) 171790	Environmental effects.	July 8, 2005.
(ii) Perfluoroalkyl acrylate copolymer, ACC 158022	.....do	Do.
(iii) Perfluoroalkyl methacrylate polymer, EPA document control number (DCN) 63040000037A	.....do	Do.
(iv) Substituted methacrylate, propenoic acid, perfluoroalkyl esters, DCN 63040000033B	.....do	Do.
(v) Perfluoroalkyl acrylic polymer, DCN 63040000037C	.....do	Do.
(vi) Poly-.beta.-fluoroalkylethyl acrylate and alkyl acrylate, ACC 174993	.....do	Do.
(vii) Poly(.beta.-fluoroalkylethyl acrylate and alkyl acrylate), ACC 70430	.....do	Do.
(viii) Polysubstituted acrylic copolymer, ACC 157381	.....do	Do.
(ix) Perfluoroalkyl acrylate copolymer latex, ACC No. 70907	.....do	Do.
(2) For Textile containing six of the following chemical substances as specified in the ECA:		
(i) Perfluoroalkylethyl acrylate copolymer, EPA-designated accession number (ACC) 171790	.....do	Do.
(ii) Perfluoroalkyl acrylate copolymer, ACC 158022	.....do	Do.
(iii) Perfluoroalkyl methacrylate polymer, EPA document control number (DCN) 63040000037A	.....do	Do.
(iv) Substituted methacrylate, propenoic acid, perfluoroalkyl esters, DCN 63040000033B	.....do	Do.
(v) Perfluoroalkyl acrylic polymer, DCN 63040000037C	.....do	Do.
(vi) Poly-.beta.-fluoroalkylethyl acrylate and alkyl acrylate, ACC 174993	.....do	Do.
(vii) Poly(.beta.-fluoroalkylethyl acrylate and alkyl acrylate), ACC 70430	.....do	Do.
(viii) Polysubstituted acrylic copolymer, ACC 157381	.....do	Do.
(ix) Perfluoroalkyl acrylate copolymer latex, ACC 70907	.....do	Do.

[55 FR 3059, Jan. 30, 1990, as amended at 70 FR 39629, 39636, July 8, 2005]

Subpart D—Multichemical Test Rules

§ 799.5055 Hazardous waste constituents subject to testing.

(a) *Identification of test substances.* (1) The table in paragraph (c) of this section identifies those chemical substances that shall be tested in accordance with this section.

(2) Substances of at least 98-percent purity shall be used as the test substances.

(b) *Persons required to submit study plans, conduct tests, and submit data.* All persons who manufacuture (including import or manufacture as a byproduct) or process or intend to manufacture or process one or more of the substances in paragraph (c) of this section, other than as an impurity, after July 29, 1988, to the end of the reimbursement period shall submit letters of intent to conduct testing, submit study plans, conduct tests, and submit data, or submit exemption applications for those substances they manufacture or process, or intend to manufacture or process, as specified in this section, subpart A of this part, and parts 790 and 792 of this chapter for single-phase rulemaking.

(c) *Designation of testing.* The substances identified in the following table by name and CAS number shall be tested in accordance with the designated requirements under paragraphs (d) and (e) of this section. The paragraph numbers listed for a substance refer to the specific testing and reporting requirements specified in paragraphs (d) and (e) of this section.

Chemical name	CAS No.	Required testing under paragraphs (d) and (e) of this section
Acetamide, 2-fluoro	640–19–7	(e)(1)
Bis(2-chloroethoxy)methane.	111–91–1	(d)(2), (e)(1)
Bis(2-chloroisopropyl)ether.	108–60–1	(d)(2)
4-Bromobenzyl cyanide ...	16532–79–9	(d)(1), (2), (e)(1)
Bromoform	75–25–2	(d)(2)
4-Chlorobenzo-trichloride	5216–25–1	(e)(1)
2,4–D	94–75–7	(d)(2)
Dibromomethane 74–95–3 (d)(2).		
1,2-Dichlorobenzene	95–50–1	(d)(2)
1,1-Dichloroethane	75–34–3	(d)(2)
1,3-Dichloropropanol	96–23–1	(d)(1), (e)(1)
Dihydrosafrole	94–58–6	(d)(2)
Endrin	72–20–8	(d)(2)
Ethyl methacrylate	97–63–2	(d)(2)

Chemical name	CAS No.	Required testing under paragraphs (d) and (e) of this section
Maleic hydrazide	123–33–1	(d)(1), (2)
Malononitrile	109–77–3	(d)(1), (e)(1)
Methanethiol	74–93–1	(d)(1)
Methyl chloride	74–87–3	(d)(2)
p- Nitrophenol	100–02–7	(e)(1)
Pentachlorobenzene	608–93–5	(d)(2)
Pentachloroethane	76–01–7	(d)(2)
1,2,4,5-Tetrachlorobenzene.	95–94–3	(d)(2)
Trichloromethanethiol	75–70–7	(d)(1), (2), (e)(1)

(d) *Chemical fate testing*—(1) *Soil adsorption*—(i) *Required testing.* A soil adsorption isotherm test shall be conducted with the substances designated in paragraph (c) of this section in accordance with § 796.2750 of this chapter except that the provisions of § 796.2750 (b)(1)(vii)(A) shall not apply to 1,3-Dichloropropanol.

(ii) *Reporting requirements.* The sediment and soil adsorption isotherm tests shall be completed and the final results submitted to EPA within 9 months of the effective date of the final rule except that final results for testing of 1,3-Dichloropropanol and Methanethiol shall be completed and submitted to EPA within 11 months and 15 months, respectively, of the effective date of the final rule.

(2) *Hydrolysis*—(i) *Required testing.* A test of hydrolysis as a function of pH at 25 °C shall be conducted with the substances designated in paragraph (c) of this section in accordance with § 796.3500 of this chapter.

(ii) *Reporting requirements.* The hydrolysis tests with the substances designated in paragraph (c) of this section shall be completed and the final results submitted to EPA within 6 months of the effective date of the final rule except that hydrolysis tests for Dibromomethane, Dihydrosafrole, Ethyl methacrylate, and Methyl chloride shall be completed and the final results submitted to EPA within 12 months of the effective date of the final rule; and hydrolysis tests for 1,2-Dichlorobenzene and 1,2,4,5-Tetrachlorobenzene shall be completed and final results submitted to EPA within 9 months of the effective date of the final rule.

(e) *Health effects testing*—(1) *Subchronic toxicity*—(i) *Required test.* (A) An oral gavage subchronic toxicity test shall be conducted in the rat with the substances designated in paragraph (c) of this section except for bis(2-chloroethoxy) methane (CAS No. 111–91–1) in accordance with § 798.2650 of this chapter.

(B) For Bis(2-chloroethoxy)methane, an oral gavage subchronic toxicity test shall be conducted in the rat in accordance with § 798.2650 of this chapter except for the provisions in paragraphs (e)(9)(i)(A) and (e)(9)(i)(B). For Bis(2-chloroethoxy)methane, the following provisions also apply:

(*1*) Hematology determinations shall be carried out at least two times during the test period: Just after dosing on day 30 and just prior to terminal sacrifice. Hematology determinations which are appropriate to all studies are: Hematocrit, hemoglobin concentration, erythrocyte count, total and differential leukocyte count, and a measure of clotting potential such as clotting time, prothrombin time, thromboplastin time, or platelet count.

(*2*) Certain clinical biochemistry determinations on blood shall be carried out at least two times: Just after dosing on day 30 and just prior to terminal sacrifice. Test areas which are considered appropriate to all studies are: Electrolyte balance, carbohydrate metabolism, and liver and kidney function. The selection of specific tests will be influenced by observations on the mode of action of the substance. Suggested determinations are: Calcium, phosphorus, chloride, sodium, potassium, fasting glucose (with the period of fasting appropriate to the species), serum glutamic oxaloacetic transaminase (now known as serum aspartate aminotransferase), ornithine decarboxylase, gamma glutamyl transpeptidase, urea nitrogen, albumen blood creatinine, total bilirubin and total serum protein measurements. Other determinations which may be necessary for an adequate toxicological evaluation include: Analysis of lipids, hormones, acid/base balance, methemoglobin, and cholinesterase activity. Additional clinical biochemistry may be employed, where necessary, to extend the investigation of observed effects.

(ii) *Reporting requirements.* (A) The oral gavage subchronic tests with the

substances designated in paragraph (c) of this section shall be completed and submitted to EPA within 12 months of the effective date of the final rule except that the tests with Bis(2-chloroethoxy)methane, 1,3-Dichloropropanol, and Malononitrile shall be completed and the results submitted to EPA within 15 months of the effective date of the final rule.

(B) Progress reports for each test shall be submitted to the Agency 6 months after the effective date of the final rule.

(2) [Reserved]

(f) *Effective date.* (1) The effective date of the final rule is July 29, 1988, except for paragraphs (d)(1)(i), (d)(1)(ii), (d)(2)(ii), (e)(1)(i), and (e)(1)(ii)(A) of this section. The effective date of paragraphs (d)(1)(i), (d)(1)(ii), (d)(2)(ii), (e)(1)(i)(B) and (e)(1)(ii)(A) of this section is March 1, 1990. The effective date of paragraph (e)(1)(i)(A), is May 21, 1991.

(2) The guidelines and other test methods cited here are referenced as they exist on the effective date of the final rule.

[53 FR 22324, June 15, 1988; 53 FR 48645, Dec. 2, 1988, as amended at 54 FR 49760, Dec. 1, 1989; 55 FR 7324, Mar. 1, 1990; 56 FR 23232, May 21, 1991; 58 FR 34205, June 23, 1993]

§ 799.5075 Drinking water contaminants subject to testing.

(a) *Identification of test substance.* (1) 1,1,2,2-tetrachloroethane (CAS No. 79–34–5), and 1,3,5-trimethylbenzene (CAS No. 108–67–8) shall be tested as appropriate in accordance with this section.

(2) A test substance of at least 99 percent purity shall be used for Chloroethane, 1,1-dichloroethane, and 1,3,5-trimethylbenzene. A test substance of at least 98 percent purity shall be used for 1,1,2,2-tetrachloroethane.

(b) *Persons required to submit study plans, conduct tests, and submit data.* All persons who manufacture (including import and by-product manufacture) or process, or who intend to manufacture or process, the substances listed in paragraph (a) of this section after the effective date of this section to the end of the reimbursement period shall submit letters of intent to test, submit study plans, conduct tests, and submit data, or submit exemption applications as specified in this section, subpart A of this part, and parts 790 and 792 of this chapter for single-phase rulemaking, for the substances they manufacture subject to exclusions contained in § 790.42(a)(2), (a)(4) and (a)(5). These sections provide that processors, persons who manufacture less than 500 kg (1,100 lbs) annually, or persons who manufacture small quantities of the chemical solely for research and development as defined in § 790.42(a)(5) shall not be required to submit study plans, conduct tests and submit data, or submit exemption applications as specified in this section unless directed to do so in a subsequent notice as set forth in § 790.48(b).

(c) *Health effects testing*—(1) *Subacute toxicity*—(i) *Required testing.* (A) An oral 14-day repeated dose toxicity test shall be conducted with 1,1,2,2-tetrachloroethane, and 1,3,5-trimethylbenzene in accordance with § 798.2650 of this chapter except for the provisions in § 798.2650 (a), (b)(1), (c), (e)(3), (e)(4)(i), (e)(5), (e)(6), (e)(7)(i), (e)(7)(iv), (e)(7)(v), (e)(8)(vii), (e)(9)(i)(A), (e)(9)(i)(B), (e)(11)(v), and (f)(2)(i). Each substance shall be tested in one mammalian species, preferably a rodent, but a non-rodent may be used. The species and strain of animals used in this test should be the same as those used in the 90-day subchronic test required in paragraph (c)(2)(i) of this section. The tests shall be performed using drinking water. However, if, due to poor stability or palatability, a drinking water test is not feasible for a given substance, that substance shall be administered either by oral gavage, in the diet, or in capsules.

(B) For the purpose of this section, the following provisions also apply:

(*1*) *Purpose.* To assess and evaluate the toxic characteristics of a substance, the determination of subacute toxicity should be carried out after initial information on toxicity has been obtained by acute testing. The 14–day repeated dose oral study provides information on the health hazard likely to arise from repeated short-term exposure by the oral route over a very limited period of time. It has been designed to permit the determination of the no-observed-adverse-effect level

and toxic effects associated with continuous or repeated exposure to a test substance for 14 days and to evaluate reversibility, persistence, and delayed occurrence of toxic effects during a 14–day follow-up recovery period. The test is not capable of determining those effects that have a long latency period for development (e.g., carcinogenicity and life shortening). It will provide information on target organs and the possibility of accumulation, and can be used in selecting dose levels for subchronic studies and for establishing safety criteria for short-term human exposure.

(*2*) *Definitions.* Subacute oral toxicity is the manifestation of adverse effect(s) occurring as a result of the repeated daily exposure of experimental animals to a substance by the oral route for 14 days.

(*3*) *Principle of the test method.* The test substance is administered orally in graduated daily doses to several groups of experimental animals, one dose level per group, for a period of 14 days. During the period of administration the animals are observed daily to detect signs of toxicity. Animals which die during the period of administration are necropsied. At the conclusion of the test, all animals, except the satellite group, are necropsied and histopathological examinations are carried out. The satellite group is necropsied after the 14–day recovery period.

(*4*) *Satellite group (Rodent only).* A satellite group of 20 animals (10 animals per sex) shall be treated with the high dose level for 14 days and observed for reversibility, persistence, and delayed occurrence of toxic effects for a post-treatment recovery period of at least 14 days.

(*5*) *Dose levels and dose selection.* In subacute toxicity tests, it is desirable to have a dose response relationship as well as a NOAEL. Therefore, at least 3 dose levels with a control and, where appropriate, a vehicle control (corresponding to the concentration of vehicle at the highest exposure level) shall be used. Doses shall be spaced appropriately to produce test groups with a range of toxic effects. The data should be sufficient to produce a dose-response curve.

(*6*) *Exposure conditions.* The animals are dosed with the test substance every day for 14 days.

(*7*) *Observation period.* All animals shall be observed daily during the 14–day exposure period.

(*8*) *Observation period of satellite group.* Animals in the satellite group scheduled for follow-up observations shall be kept for at least 14 days further without treatment to detect recovery from, or persistence of, and delayed onset of toxic effects and shall be observed daily.

(*9*) *Administration of test substance.* For substances of low toxicity, it is important to ensure that when administered in the drinking water, by gavage, in the diet, or in capsules, the quantities of the test substance involved do not interfere with normal nutrition. When the test substance is administered in the diet, either a constant dietary concentration (ppm) or a constant dose level in terms of the animals' body weight shall be used; the alternative used shall be specified in the final test report.

(*10*) *Time of administration of test substance.* For a substance administered by gavage or capsule, the dose shall be given at approximately the same time each day, and adjusted on day 7 to maintain a constant dose level in terms of animal body weight.

(*11*) *Observation of animals.* At the end of the 14–day exposure period, all survivors, except those in the satellite group, shall be necropsied. All survivors in the satellite group shall be necropsied after a recovery period of at least 14 days.

(*12*) *Hematology determinations.* Certain hematology determinations shall be carried out at least two times during the test period: Just prior to initiation of dosing if adequate historical baseline data are not available (baseline data) and just prior to terminal sacrifice at the end of the test period. Hematology determinations which are appropriate to all studies are: Hematocrit, hemoglobin concentration, erythrocyte count, total and differential leukocyte count, and a measure of clotting potential such as clotting time, prothrombin time, thromboplastin time, or platelet count.

(*13*) *Clinical biochemical determinations.* Certain clinical biochemistry determinations on blood should be carried out at least two times: Just prior to initiation of dosing (if adequate historical baseline data are not available) and just prior to terminal sacrifice at the end of the test period. Test areas which are considered appropriate to all studies are: Electrolyte balance, carbohydrate metabolism, and liver and kidney function. The selection of specific tests will be influenced by observations on the mode of action of the substance. Suggested determinations are: Calcium, phosphorus, chloride, sodium, potassium, fasting glucose (with the period of fasting appropriate to the species), serum alanine aminotransferase, serum aspartate aminotransferase, gamma glutamyl transpeptidase, urea nitrogen, albumin, blood creatinine, and total serum protein measurements. Other determinations which may be necessary for an adequate toxicological evaluation include: analyses of lipids, hormones, acid/base balance, methemoglobin, and cholinesterase activity. Additional clinical biochemistry may be employed, where necessary, to extend the investigation of observed effects.

(*14*) *Histopathology*. Histopathology of the lungs of all animals shall be performed. Special attention to examination of the lungs of rodents shall be made for evidence of infection since this provides a convenient assessment of the state of health of the animals.

(*15*) *Evaluation of the study results.* The findings of a subacute oral toxicity study should be evaluated in conjunction with the findings of preceding studies and considered in terms of the toxic effects and the necropsy and histopathological findings. The evaluation will include the relationship between the dose of the test substance and the presence or absence, the incidence and severity, of abnormalities, including behavioral and clinical abnormalities, gross lesions, identified target organs, body weight changes, effects on mortality and any other general or specific toxic effects. A properly conducted subacute test should provide a satisfactory estimation of a NOAEL.

(ii) *Reporting requirements.* (A) Each subacute test shall be completed and the final report submitted to EPA within 12 months of the date specified in paragraph (d)(1) of this section, except for 1,1,2,2-tetrachloroethane. The subacute testing for 1,1,2,2-tetrachloroethane. The subacute testing for 1,1,2,2-tetrachloroethane shall be completed and the final report submitted to EPA by February 15, 1996.

(B) Except for 1,3,5-trimethylbenzene, a progress report shall be submitted to EPA for each test beginning 6 months after the date specified in paragraph (d)(1) of this section and at 6–month intervals thereafter until the final report is submitted to EPA . The progress report for 1,3,5-trimethylbenzene shall be submitted to EPA by April 10, 1995.

(2) *Subchronic toxicity*—(i) *Required testing.* (A) An oral 90-day subchronic toxicity test shall be conducted with 1,3,5-trimethylbenzene in accordance with § 798.2650 of this chapter except for the provisions in § 798.2650 (e)(3), (e)(7)(i), and (e)(11)(v). The tests shall be performed using drinking water. However, if, due to poor stability or palatability, a drinking water test is not feasible for a given substance, that substance shall be administered either by oral gavage, in the diet, or in capsules.

(B) For the purpose of this section, the following provisions also apply:

(*1*) *Satellite group (Rodent only).* A satellite group of 20 animals (10 animals per sex) shall be treated with the high dose level for 90 days and observed for reversibility, persistence, and delayed occurrence of toxic effects for a post-treatment period of appropriate length, normally not less than 28 days.

(*2*) *Histopathology*. Histopathology of the lungs of all animals shall be performed. Special attention to examination of the lungs of rodents shall be made for evidence of infection since this provides a convenient assessment of the state of health of the animals.

(ii) *Reporting requirements.* (A) The subchronic testing for chloroethane shall be completed and the final report submitted to EPA by June 27, 1995. The subchronic testing for 1,1-dichloroethane and 1,1,2,2-tetrachlorethane shall be completed and the final report submitted to EPA by August 27, 1995. The subchronic testing for 1,3,5-trimethylbenzene shall be

completed and the final report submitted to EPA by April 10, 1995.

(B) For each test, a progress report shall be submitted to EPA beginning 9 months after the date specified in paragraph (d)(1) of this section and at 6–month intervals thereafter until the final report is submitted to EPA.

(d) *Effective date.* (1) This section is effective on December 27, 1993, except for paragraphs (a)(1), (a)(2), (c)(1)(i)(A), (c)(1)(ii)(A), (c)(1)(ii)(B), (c)(2)(i)(A), and (c)(2)(ii)(A). The effective date for paragraphs (a)(2), (c)(1)(ii)(B), and (c)(2)(ii)(A) is September 29, 1995. The effective date for paragraphs (a)(1), (c)(1)(i)(A), and (c)(2)(i)(A) is February 27, 1996. The effective date for paragraph (c)(1)(ii)(A) is June 30, 1997.

(2) The guidelines and other test methods cited in this section are referenced as they exist on the effective date of the final rule.

[58 FR 59681, Nov. 10, 1993; 58 FR 1992, Jan. 13, 1994, as amended at 60 FR 56956, Nov. 13, 1995; 61 FR 7223, Feb. 27, 1996; 62 FR 35105, June 30, 1997]

§ 799.5085 Chemical testing requirements for certain high production volume chemicals.

(a) *What substances will be tested under this section*? Table 2 in paragraph (j) of this section identifies the chemical substances that must be tested under this section. For the chemical substances identified as ''Class 1'' substances in Table 2 in paragraph (j) of this section, the purity of each chemical substance must be 99% or greater, except for 1,3-propanediol, 2,2-bis[(nitrooxy)methyl]-, dinitrate (ester) (CAS No. 78–11–5), also known as pentaerythritol tetranitrate (PETN). PETN cannot be tested at 99% purity because of its explosive properties. It must be diluted in water or tested as a stabilized mixture with an appropriate stabilizer (e.g., D-lactose monohydrate is the stabilizer in PETN, NF which is a mixture of 20% by weight PETN and 80% by weight D-lactose monohydrate). The stabilizer used must be tested as a control. For the chemical substances identified as ''Class 2'' substances in Table 2 in paragraph (j), a representative form of each chemical substance must be tested. The representative form selected for a given Class 2 chemical substance should meet industry or consensus standards where they exist.

(b) *Am I subject to this section*? (1) If you manufacture (including import) or intend to manufacture, or process or intend to process, any chemical substance listed in Table 2 in paragraph (j) of this section at any time from April 17, 2006 to the end of the test data reimbursement period as defined in 40 CFR 791.3(h), you are subject to this section with respect to that chemical substance.

(2) If you do not know or cannot reasonably ascertain that you manufacture or process a chemical substance listed in Table 2 in paragraph (j) of this section during the time period described in paragraph (b)(1) of this section (based on all information in your possession or control, as well as all information that a reasonable person similarly situated might be expected to possess, control, or know, or could obtain without an unreasonable burden), you are not subject to this section with respect to that chemical substance.

(c) *If I am subject to this section, when must I comply with it*? (1)(i) Persons subject to this section are divided into two groups, as set forth in Table 1 of this paragraph: Tier 1 (persons initially required to comply) and Tier 2 (persons not initially required to comply). If you are subject to this section, you must determine if you fall within Tier 1 or Tier 2, based on Table 1 of this paragraph.

TABLE 1—PERSONS SUBJECT TO THE RULE: PERSONS IN TIER 1 AND TIER 2

Persons initially required to comply with this section (Tier 1)	Persons not initially required to comply with this section (Tier 2)
Persons not otherwise specified in column 2 of this table that manufacture (as defined at TSCA section 3(7)) or intend to manufacture a chemical substance included in this section.	A. Persons who manufacture (as defined at TSCA section 3(7)) or intend to manufacture a chemical substance included in this section solely as one or more of the following: —As a byproduct (as defined at 40 CFR 791.3(c)); —As an impurity (as defined at 40 CFR 790.3); —As a naturally occurring substance (as defined at 40 CFR 710.4(b)); —As a non-isolated intermediate (as defined at 40 CFR 704.3); —As a component of a Class 2 substance (as described at 40 CFR 720.45(a)(1)(i)); —In amounts of less than 500 kg (1,100 lbs.) annually (as described at 40 CFR 790.42(a)(4)); or —For R & D (as described at 40 CFR 790.42(a)(5)). B. Persons who process (as defined at TSCA section 3(10)) or intend to process a chemical substance included in this section (see 40 CFR 790.42(a)(2)).

(ii) Table 1 of paragraph (c)(1)(i) of this section expands the list of persons specified in §790.42(a)(2), (a)(4), and (a)(5) of this chapter, who, while legally subject to this section, must comply with the requirements of this section only if directed to do so by EPA under the circumstances set forth in paragraphs (c)(5) and (c)(8) of this section.

(2) If you are in Tier 1 with respect to a chemical substance listed in Table 2 in paragraph (j) of this section, you must, for each test required under this section for that chemical substance, either submit to EPA a letter of intent to test or apply to EPA for an exemption from testing. The letter of intent to test or the exemption application must be received by EPA no later than May 15, 2006.

(3) If you are in Tier 2 with respect to a chemical substance listed in Table 2 in paragraph (j) of this section, you are considered to have an automatic conditional exemption and you will be required to comply with this section with regard to that chemical substance only if directed to do so by EPA under paragraphs (c)(5) or (c)(8) of this section.

(4) If no person in Tier 1 has notified EPA of its intent to conduct one or more of the tests required by this section on any chemical substance listed in Table 2 in paragraph (j) of this section by May 15, 2006, EPA will publish a FEDERAL REGISTER document that will specify the test(s) and the chemical substance(s) for which no letter of intent has been submitted, and notify manufacturers and processors in Tier 2 of their obligation to submit a letter of intent to test or to apply for an exemption from testing.

(5) If you are in Tier 2 with respect to a chemical substance listed in Table 2 in paragraph (j) of this section, and if you manufacture or process this chemical substance as of April 17, 2006, or within 30 days after publication of the FEDERAL REGISTER document described in paragraph (c)(4) of this section, you must, for each test specified for that chemical substance in the document described in paragraph (c)(4) of this section, either submit to EPA a letter of intent to test or apply to EPA for an exemption from testing. The letter of intent to test or the exemption application must be received by EPA no later than 30 days after publication of the document described in paragraph (c)(4) of this section.

(6) If no manufacturer or processor has notified EPA of its intent to conduct one or more of the tests required by this section for any of the chemical substances listed in Table 2 in paragraph (j) of this section within 30 days after the publication of the FEDERAL REGISTER document described in paragraph (c)(4) of this section, EPA will notify all manufacturers and processors of those chemical substances of this fact by certified letter or by publishing a FEDERAL REGISTER document specifying the test(s) for which no letter of intent has been submitted. This letter or FEDERAL REGISTER document will additionally notify all manufacturers and processors that all exemption applications concerning the test(s) have been denied, and will give the manufacturers and processors of the chemical substance(s) an opportunity to take corrective action.

(7) If no manufacturer or processor has notified EPA of its intent to conduct one or more of the tests required

by this section for any of the chemical substances listed in Table 2 in paragraph (j) of this section within 30 days after receipt of the certified letter or publication of the FEDERAL REGISTER document described in paragraph (c)(6) of this section, all manufacturers and processors subject to this section with respect to that chemical substance who are not already in violation of this section will be in violation of this section.

(8) If a problem occurs with the initiation, conduct, or completion of the required testing or the submission of the required data with respect to a chemical substance listed in Table 2 in paragraph (j) of this section, under the procedures in §§790.93 and 790.97 of this chapter, EPA may initiate termination proceedings for all testing exemptions with respect to that chemical substance and may notify persons in Tier 1 and Tier 2 that they are required to submit letters of intent to test or exemption applications within a specified period of time.

(9) If you are required to comply with this section, but your manufacturing or processing of a chemical substance listed in Table 2 in paragraph (j) of this section begins after the applicable compliance date referred to in paragraphs (c)(2), (c)(5), or (c)(8) of this section, you must either submit a letter of intent to test or apply to EPA for an exemption. The letter of intent to test or the exemption application must be received by EPA no later than the day you begin manufacturing or processing.

(d) *What must I do to comply with this section*? (1) To comply with this section you must either submit to EPA a letter of intent to test, or apply to and obtain from EPA an exemption from testing.

(2) For each test with respect to which you submit to EPA a letter of intent to test, you must conduct the testing specified in paragraph (h) of this section and submit the test data to EPA.

(3) You must also comply with the procedures governing test rule requirements in part 790 of this chapter, as modified by this section, including the submission of letters of intent to test or exemption applications, the conduct of testing, and the submission of data; Part 792—Good Laboratory Practice Standards of this chapter; and this section. The following provisions of 40 CFR part 790 do not apply to this section: Paragraphs (a), (d), (e), and (f) of §790.45; paragraph (a)(2) and paragraph (b) of §§790.80; 790.82(e)(1); 790.85; and 790.48.

(e) *If I do not comply with this section, when will I be considered in violation of it*? You will be considered in violation of this section as of 1 day after the date by which you are required to comply with this section.

(f) *How are EPA's data reimbursement procedures affected for purposes of this section*? If persons subject to this section are unable to agree on the amount or method of reimbursement for test data development for one or more chemical substances included in this section, any person may request a hearing as described in 40 CFR part 791. In the determination of fair reimbursement shares under this section, if the hearing officer chooses to use a formula based on production volume, the total production volume amount will include amounts of a chemical substance produced as an impurity.

(g) *Who must comply with the export notification requirements*? Any person who exports, or intends to export, a chemical substance listed in Table 2 in paragraph (j) of this section is subject to part 707, subpart D, of this chapter.

(h) *How must I conduct my testing*? (1) The tests that are required for each chemical substance are indicated in Table 2 in paragraph (j) of this section. The test methods that must be followed are provided in Table 3 in paragraph (j) of this section. You must proceed in accordance with these test methods as required according to Table 3 in paragraph (j) of this section, or as appropriate if more than one alternative is allowed according to Table 3 in paragraph (j) of this section. Included in Table 3 in paragraph (j) of this section are the following 11 methods which are incorporated by reference:

(i) Standard Test Method for Relative Initial and Final Melting Points and the Melting Range of Organic Chemicals, ASTM E 324–99.

(ii) Standard Test Method for Partition Coefficient (N-Octanol/Water) Estimation by Liquid Chromatography, ASTM E 1147–92. (Reapproved 1997)

(iii) Standard Guide for Conducting Acute Toxicity Tests on Test Materials with Fishes, Macroinvertebrates, and Amphibians, ASTM E 729–96. (Reapproved 2002)

(iv) Standard Test Method for Measurements of Aqueous Solubility, ASTM E 1148–02.

(v) Standard Test Method for Estimating Acute Oral Toxicity in Rats, ASTM E 1163–98. (Reapproved 2002)

(vi) Standard Guide for Conducting Daphnia Magna Life-Cycle Toxicity Tests, ASTM E 1193–97. (Reapproved 2004)

(vii) Standard Guide for Conducting Static Toxicity Tests with Microalgae, ASTM E 1218–04.

(viii) Standard Test Method for Determining Biodegradability of Organic Chemicals in Semi-Continuous Activated Sludge (SCAS), ASTM E 1625–94. (Reapproved 2001)

(ix) Standard Test Method for Vapor Pressure of Liquids by Ebulliometry, ASTM E 1719–97.

(x) Standard Test Method for Determining Vapor Pressure by Thermal Analysis, ASTM E 1782–03.

(xi) Water Quality—Evaluation of Ultimate Aerobic Biodegradability of Organic Compounds in Aqueous Medium—Static Test (Zahn-Wellens Method), Second Edition, June 1, 1999, ISO 9888–99.

(2) The Director of the Federal Register approved this incorporation by reference in accordance with 5 U.S.C. 552(a) and 1 CFR part 51. You may obtain copies of the ASTM guidelines from the American Society for Testing and Materials, 100 Bar Harbor Dr., West Conshohocken, PA 19428–2959, and a copy of the ISO guideline from the International Organization for Standardization, Case Postale, 56 CH-1211 Geneve 20 Switzerland. You may inspect each test method at the EPA Docket Center, EPA West, Rm. B102, 1301 Constitution Ave., NW., Washington, DC or at the National Archives and Records Administration (NARA). For information on the availability of this material at NARA, call (202) 741–6030, or go to: *http://www.archives.gov/federal_register/code_of_federal_regulations/ibr_locations.html.*

(i) *Reporting requirements.* A final report for each specific test for each subject chemical substance must be received by EPA by May 17, 2007, unless an extension is granted in writing pursuant to 40 CFR 790.55. A robust summary of the final report for each specific test should be submitted in addition to and at the same time as the final report. The term ''robust summary'' is used to describe the technical information necessary to adequately describe an experiment or study and includes the objectives, methods, results, and conclusions of the full study report which can be either an experiment or in some cases an estimation or prediction method. Guidance for the compilation of robust summaries is described in a document entitled *Draft Guidance on Developing Robust Summaries* which is available at: *http://www.epa.gov/chemrtk/robsumgd.htm.*

(j) *Designation of specific chemical substances and testing requirements.* The chemical substances identified by chemical name, Chemical Abstract Service Number (CAS No.), and class in Table 2 of this paragraph must be tested in accordance with the requirements designated in Tables 2 and 3 of this paragraph, and the requirements described in 40 CFR Part 792—Good Laboratory Practice Standards:

TABLE 2—CHEMICAL SUBSTANCES AND TESTING REQUIREMENTS

CAS No.	Chemical name	Class	Required tests/(See Table 3 of this section)
74–95–3	Methane, dibromo-	1	A, C1, E2, F2
75–36–5	Acetyl chloride	1	A, B, C2, E2, F1
78–11–5	1,3-Propanediol, 2,2-bis[(nitrooxy)methyl]-, dinitrate (ester)	1	A4, A5, B, C6, F2
84–65–1	9,10-Anthracenedione	1	A, F2
108–19–0	Imidodicarbonic diamide	1	A, B, C1, D, E1, E2, F1

TABLE 2—CHEMICAL SUBSTANCES AND TESTING REQUIREMENTS—Continued

CAS No.	Chemical name	Class	Required tests/(See Table 3 of this section)
110–44–1	2,4-Hexadienoic acid, (2E,4E)-	1	A, C4
112–52–7	Dodecane, 1-chloro	1	A, B, C3, D, E1, E2, F1
118–82–1	Phenol, 4,4′-methylenebis[2,6-bis(1,1-dimethylethyl)]-	1	A, B, D, E1, E2, F2
149–44–0	Methanesulfinic acid, hydroxy-, monosodium salt	1	A, B, C1, E2, F1
409–02–9	Heptenone, methyl-	2	A, B, C1, D, E1, E2, F1
594–42–3	Methanesulfenyl chloride, trichloro-	1	A, B, C1, E1, E2, F2
624–83–9	Methane, isocyanato-	1	A, C1
1324–76–1	Benzenesulfonic acid, [[4-[[4-(phenylamino)phenyl][4-(phenylimino)-2,5-cyclohexadien-1-ylidene]methyl]phenyl]amino]-	2	A, B, C1, D, E1, E2, F1
2941–64–2	Carbonochloridothioic acid, S-ethyl ester	1	A, B, C1, E2, F1
8005–02–5	C.I. Solvent Black 7	2	A, B, C1, D, E2, F1
68611–64–3	Urea, reaction products with formaldehyde	2	A, B, C1, D, E1, E2, F1

TABLE 3—KEY TO THE TEST REQUIREMENTS DENOTED BY ALPHANUMERIC SYMBOLS IN TABLE 2 OF THIS PARAGRAPH

Testing category	Test symbol	Test requirements and references	Special conditions
Physical/chemical properties	A	1. Melting Point: ASTM E 324 (capillary tube) 2. Boiling Point: ASTM E 1719 (ebulliometry) 3. Vapor Pressure: ASTM E 1782 (thermal analysis) 4. *n*-Octanol/Water Partition Coefficient (log 10 basis) or log K_{ow}: (See special conditions for the log K_{ow} test requirement and select the appropriate method to use, if any, from those listed in this column.) Method A: 40 CFR 799.6755 (shake flask) Method B: ASTM E 1147 (liquid chromatography) Method C: 40 CFR 799.6756 (generator column) 5. *Water Solubility*: (See special conditions for the water solubility test requirement and select the appropriate method to use, if any, from those listed in this column.) Method A: ASTM E 1148 (shake flask) Method B: 40 CFR 799.6784 (shake flask) Method C: 40 CFR 799.6784 (column elution) Method D: 40 CFR 799.6786 (generator column)	*n*-Octanol/water Partition Coefficient or log K_{ow}: Which method is required, if any, is determined by the test substance's estimated[1] log K_{ow} as follows: log K_{ow} <0: no testing required. log K_{ow} range 0–1: Method A or B. log K_{ow} range >1–4: Method A or B or C. log K_{ow} range >4–6: Method B or C. log K_{ow} >6: Method C. Test sponsors are required to provide in the final study report the underlying rationale for the method selected. In order to ensure environmental relevance, EPA highly recommends that the selected study be conducted at pH 7. *Water Solubility*: Which method is required, if any, is determined by the test substance's estimated[2] water solubility. Test sponsors are required to provide in the final study report the underlying rationale for the method selected. In order to ensure environmental relevance, EPA highly recommends that the selected study be conducted at pH 7. >5,000 mg/L: Method A or B. >10 mg/L —5,000 mg/L: Method A, B, C, or D. > 0.001 mg/L—10 mg/L: Method C or D. ≤0.001 mg/L: No testing required.
Environmental fate and pathways—Inherent biodegradation	B	For B, choose either of the methods listed in this column: 1. ASTM 1625 (semicontinuous activated sludge test) OR 2. ISO 9888 (Zahn-Wellens method)	None

TABLE 3—KEY TO THE TEST REQUIREMENTS DENOTED BY ALPHANUMERIC SYMBOLS IN TABLE 2 OF THIS PARAGRAPH—Continued

Testing category	Test symbol	Test requirements and references	Special conditions
Aquatic toxicity	C1	For C1, Test Group 1 or Test Group 2 listed in this column must be used to fulfill the testing requirements—See special conditions. *Test Group 1 for C1*: 1. Acute Toxicity to Fish: ASTM E 729 2. Acute Toxicity to Daphnia: ASTM E 729 3. Toxicity to Plants (Algae): ASTM E 1218 *Test Group 2 for C1*: 1. Chronic Toxicity to Daphnia: ASTM E 1193 2. Toxicity to Plants (Algae): ASTM E 1218	The following are the special conditions for C1, C2, C3, C4, C5, and C7 testing; there are no special conditions for C6. If log K_{ow} <4.2: Test Group 1 is required If log $K_{ow} \geq 4.2$: Test Group 2 is required Which test group is required is determined by the test substance's measured log K_{ow} as obtained under A[3].
	C2	For C2, Test Group 1 or Test Group 2 listed in this column must be used to fulfill the testing requirements—See special conditions. *Test Group 1 for C2*: 1. Acute Toxicity to Daphnia: ASTM E 729 2. Toxicity to Plants (Algae): ASTM E 1218 *Test Group 2 for C2*: 1. Chronic Toxicity to Daphnia: ASTM E 1193 2. Toxicity to Plants (Algae): ASTM E 1218	
	C3	For C3, Test Group 1 or Test Group 2 listed in this column must be used to fulfill the testing requirements—See special conditions. *Test Group 1 for C3*: 1. Acute Toxicity to Fish: ASTM E 729 2. Toxicity to Plants (Algae): ASTM E 1218 Test Group 2 for C3: 1. Chronic Toxicity to Daphnia: ASTM E 1193 2. Toxicity to Plants (Algae): ASTM E 1218	
	C4	For C4, Test Group 1 or Test Group 2 listed in this column must be used to fulfill the testing requirements—See special conditions. *Test Group 1 for C4*: 1. Acute Toxicity to Fish: ASTM E 729 2. Acute Toxicity to Daphnia: ASTM E 729 *Test Group 2 for C4*: 1. Chronic Toxicity to Daphnia: ASTM E 1193	
	C5	For C5, Test Group 1 or Test Group 2 below must be used to fulfill the testing requirements—See special conditions. *Test Group 1 for C5*: 1. Acute Toxicity to Daphnia: ASTM E 729 *Test Group 2 for C5*: 1. Chronic Toxicity to Daphnia: ASTM E 1193	
	C6	Toxicity to Plants (Algae): ASTM E 1218	
	C7	For C7, Test Group 1 or Test Group 2 of this column must be used to fulfill the testing requirements—See special conditions. *Test Group 1 for C7*: 1. Acute Toxicity to Fish: ASTM E 729 *Test Group 2 for C7*: 1. Chronic Toxicity to Daphnia: ASTM E 1193	

TABLE 3—KEY TO THE TEST REQUIREMENTS DENOTED BY ALPHANUMERIC SYMBOLS IN TABLE 2 OF THIS PARAGRAPH—Continued

Testing category	Test symbol	Test requirements and references	Special conditions
Mammalian toxicity—Acute	D	See special conditions for this test requirement and select the method that must be used from those listed in this column. Method A: Acute Inhalation Toxicity (rat): 40 CFR 799.9130 Method B: EITHER: 1. Acute (Up/Down) Oral Toxicity (rat): ASTM E 1163 OR 2. Acute (Up/Down) Oral Toxicity (rat): 40 CFR 799.9110(d)(1)(i)(A)	Which testing method is required is determined by the test substance's physical state at room temperature (25 °C). For those test substances that are gases at room temperature, Method A is required; otherwise, use either of the two methods listed under Method B. In Method B, 40 CFR 799.9110(d)(1)(i)(A) refers to the OECD 425 Up/Down Procedure[4]. Estimating starting dose for Method B: Data from the neutral red uptake basal cytotoxicity assay[5] using normal human keratinocytes or mouse BALB/c 3T3 cells may be used to estimate the starting dose.
Mammalian toxicity—Genotoxicity	E1	Bacterial Reverse Mutation Test (*in vitro*): 40 CFR 799.9510	None
	E2	Conduct any one of the following three tests for chromosomal damage: *In vitro* Mammalian Chromosome Aberration Test: 40 CFR 799.9537 OR Mammalian Bone Marrow Chromosomal Aberration Test (*in vivo* in rodents: mouse (preferred species), rat, or Chinese hamster): 40 CFR 799.9538 OR Mammalian Erythrocyte Micronucleus Test [sampled in bone marrow] (*in vivo* in rodents: Mouse (preferred species), rat, or Chinese hamster): 40 CFR 799.9539	Persons required to conduct testing for chromosomal damage are encouraged to use the *in vitro* Mammalian Chromosome Aberration Test (40 CFR 799.9537) to generate the needed data unless known chemical properties (e.g., physical/chemical properties, chemical class characteristics) preclude its use. A subject person who uses one of the *in vivo* methods instead of the *in vitro* method to address a chromosomal damage test requirement must submit to EPA a rationale for conducting that alternate test in the final study report.
Mammalian toxicity—Repeated dose/reproduction/developmental	F1	Combined Repeated Dose Toxicity Study with the Reproduction/Developmental Toxicity Screening Test: 40 CFR 799.9365 OR Reproduction/Developmental Toxicity Screening Test: 40 CFR 799.9355 AND Repeated Dose 28–Day Oral Toxicity Study in rodents: 40 CFR 799.9305	Where F1 is required, EPA recommends use of the Combined Repeated Dose Toxicity Study with the Reproduction/Developmental Toxicity Screening Test (40 CFR 799.9365). However, there may be valid reasons to test a particular chemical using both 40 CFR 799.9355 and 40 CFR 799.9305 to fill Mammalian Toxicity—Repeated Dose/Reproduction/Developmental data needs. A subject person who uses the combination of 40 CFR 799.9355 and 40 CFR 799.9305 in place of 40 CFR 799.9365 must submit to EPA a rationale for conducting these alternate tests in the final study reports. Where F2 or F3 is required, no rationale for conducting the required test need be provided in the final study report.
	F2	Reproduction/Developmental Toxicity Screening Test: 40 CFR 799.9355	
	F3	Repeated Dose 28–Day Oral Toxicity Study in rodents: 40 CFR 799.9305	

[1] EPA recommends, but does not require, that log K_{ow} be quantitatively estimated prior to initiating this study. One method, among many similar methods, for estimating log K_{ow} is described in the article entitled *Atom/Fragment Contribution Method for Estimating Octanol-Water Partition Coefficients*) by W.M. Meylan and P.H. Howard in the *Journal of Pharmaceutical Sciences*. 84(1):83–92. January 1992. This reference is available under docket ID number EPA–HQ–OPPT–2005–0033 at the EPA Docket Center, Rm. B102, 1301 Constitution Ave., NW., Washington, DC, from 8:30 a.m. to 4:30 p.m., Monday through Friday, excluding legal holidays.

[2] EPA recommends, but does not require, that water solubility be quantitatively estimated prior to initiating this study. One method, among many similar methods, for estimating water solubility is described in the article entitled *Improved Method for Estimating Water Solubility From Octanol/Water Partition Coefficient* by W.M. Meylan, P.H. Howard, and R.S. Boethling in *Environmental Toxicology and Chemistry*. 15(2):100–106. 1996. This reference is available under docket ID number EPA–HQ–OPPT–2005–0033 at the EPA Docket Center, Rm. B102, 1301 Constitution Ave., NW., Washington, DC, from 8:30 a.m. to 4:30 p.m., Monday through Friday, excluding legal holidays.

[3] Chemical substances that are dispersible in water may have log K_{ow} values greater than 4.2 and may still be acutely toxic to aquatic organisms. EPA recommends, but does not require, that test sponsors who wish to conduct Test Group 1 studies on such chemicals to submit to EPA for approval a written request to conduct Test Group 1 studies 90 days prior to conducting such studies. The written request should include the rationale for conducting Test Group 1 studies.

[4] The OECD 425 Up/Down Procedure, revised by OECD in December 2001, is available under docket ID number EPA–HQ–OPPT–2005–0033 at the EPA Docket Center, Rm. B102, 1301 Constitution Ave., NW., Washington, DC, from 8:30 a.m. to 4:30 p.m., Monday through Friday, excluding legal holidays.

[5] The neutral red uptake basal cytotoxicity assay, which may be used to estimate the starting dose for the mammalian toxicity-acute endpoint, is available under docket ID number EPA–HQ–OPPT–2005–0033 at the EPA Docket Center, Rm. B102, 1301 Constitution Ave., NW., Washington, DC, from 8:30 a.m. to 4:30 p.m., Monday through Friday, excluding legal holidays.

(k) *Effective date.* This section is effective on April 17, 2006.

[71 FR 13730, Mar. 16, 2006, as amended at 71 FR 71062, Dec. 8, 2006]

§ 799.5115 Chemical testing requirements for certain chemicals of interest to the Occupational Safety and Health Administration.

(a) *What substances will be tested under this section?* Table 2 in paragraph (j) of this section identifies the chemical substances that must be tested under this section. For the chemical substances identified as ''Class 1'' substances in Table 2 in paragraph (j) of this section, the purity of each chemical substance must be 99% or greater, unless otherwise specified in this section. For the chemical substances identified as ''Class 2'' substances in Table 2 in paragraph (j) of this section, a representative form of each chemical substance must be tested.

(b) *Am I subject to this section?* (1) If you manufacture (including import) or intend to manufacture, or process or intend to process, any chemical substance listed in Table 2 in paragraph (j) of this section at any time from May 26, 2004, to the end of the test data reimbursement period as defined in 40 CFR 791.3(h), you are subject to this section with respect to that chemical substance.

(2) If you do not know or cannot reasonably ascertain that you manufacture or process a chemical substance listed in Table 2 in paragraph (j) of this section during the time period described in paragraph (b)(1) of this section (based on all information in your possession or control, as well as all information that a reasonable person similarly situated might be expected to possess, control, or know, or could obtain without an unreasonable burden), you are not subject to this section with respect to that chemical substance.

(c) *If I am subject to this section, when must I comply with it?* (1)(i) Persons subject to this section are divided into two groups, as set forth in Table 1 of this paragraph: Tier 1 (persons initially required to comply) and Tier 2 (persons not initially required to comply). If you are subject to this section, you must determine if you fall within Tier 1 or Tier 2, based on Table 1 of this paragraph.

TABLE 1—PERSONS SUBJECT TO THE RULE: PERSONS IN TIER 1 AND TIER 2

Persons initially required to comply with this section (Tier 1)	Persons not initially required to comply with this section (Tier 2)
Persons not otherwise specified in column 2 of this table that manufacture (as defined at TSCA section 3(7)) or intend to manufacture a chemical substance included in this section.	A. Persons who manufacture (as defined at TSCA section 3(7)) or intend to manufacture a chemical substance included in this section solely as one or more of the following: —As a byproduct (as defined at 40 CFR 791.3(c)); —As an impurity (as defined at 40 CFR 790.3); —As a naturally occurring substance (as defined at 40 CFR 710.4(b)); —As a non-isolated intermediate (as defined at 40 CFR 704.3); —As a component of a Class 2 substance (as described at 40 CFR 720.45(a)(1)(i)); —In amounts of less than 500 kilograms (kg) (1,100 lbs) annually (as described at 40 CFR 790.42(a)(4)); or —For research and development (as described at 40 CFR 790.42(a)(5)). B. Persons who process (as defined at TSCA section 3(10)) or intend to process a chemical substance included in this section (see 40 CFR 790.42(a)(2)).

(ii) Table 1 in paragraph (c)(1)(i) of this section expands the list of persons specified in § 790.42(a)(2), (a)(4), and (a)(5) of this chapter, who, while legally subject to this section, must comply with the requirements of this section only if directed to do so by EPA under the circumstances set forth in paragraphs (c)(4) through (c)(7) and (c)(10) of this section.

(2) If you are in Tier 1 with respect to a chemical substance listed in Table 2 in paragraph (j) of this section, you must, for each test required under this section for that chemical substance, either submit to EPA a letter of intent

to test or apply to EPA for an exemption from testing. The letter of intent to test or the exemption application must be received by EPA no later than June 25, 2004.

(3) If you are in Tier 2 with respect to a chemical substance listed in Table 2 in paragraph (j) of this section, you are considered to have an automatic conditional exemption and you will be required to comply with this section with regard to that chemical substance only if directed to do so by EPA under paragraphs (c)(5), (c)(7), or (c)(10) of this section.

(4) If no person in Tier 1 has notified EPA of its intent to conduct one or more of the tests required by this section on any chemical substance listed in Table 2 in paragraph (j) of this section by June 25, 2004, EPA will publish a FEDERAL REGISTER document that would specify the test(s) and the chemical substance(s) for which no letter of intent has been submitted, and notify manufacturers in Tier 2A of their obligation to submit a letter of intent to test or to apply for an exemption from testing.

(5) If you are in Tier 2A with respect to a chemical substance listed in Table 2 in paragraph (j) of this section, and if you manufacture this chemical substance as of May 26, 2004, or within 30 days after publication of the FEDERAL REGISTER document described in paragraph (c)(4) of this section, you must, for each test specified for that chemical substance in the document described in paragraph (c)(4) of this section, either submit to EPA a letter of intent to test or apply to EPA for an exemption from testing. The letter of intent to test or the exemption application must be received by EPA no later than 30 days after publication of the document described in paragraph (c)(4) of this section.

(6) If no manufacturer in Tier 1 or Tier 2A has notified EPA of its intent to conduct one or more of the tests required by this section on any chemical substance listed in Table 2 in paragraph (j) of this section within 30 days after the publication of the FEDERAL REGISTER document described in paragraph (c)(4) of this section, EPA will publish another FEDERAL REGISTER document that would specify the test(s) and the chemical substance(s) for which no letter of intent has been submitted, and notify processors in Tier 2B of their obligation to submit a letter of intent to test or to apply for an exemption from testing.

(7) If you are in Tier 2B with respect to a chemical substance listed in Table 2 in paragraph (j) of this section, and if you process this chemical substance as of May 26, 2004, or within 30 days after publication of the FEDERAL REGISTER document described in paragraph (c)(6) of this section, you must, for each test specified for that chemical substance in the document described in paragraph (c)(6) of this section, either submit to EPA a letter of intent to test or apply to EPA for an exemption from testing. The letter of intent to test or the exemption application must be received by EPA no later than 30 days after publication of the document described in paragraph (c)(6) of this section.

(8) If no manufacturer or processor has notified EPA of its intent to conduct one or more of the tests required by this section for any of the chemical substances listed in Table 2 in paragraph (j) of this section within 30 days after the publication of the FEDERAL REGISTER document described in paragraph (c)(6) of this section, EPA will notify all manufacturers and processors of those chemical substances of this fact by certified letter or by publishing a FEDERAL REGISTER document specifying the test(s) for which no letter of intent has been submitted. This letter or FEDERAL REGISTER document will additionally notify all manufacturers and processors that all exemption applications concerning the test(s) have been denied, and will give the manufacturers and processors of the chemical substance(s) an opportunity to take corrective action.

(9) If no manufacturer or processor has notified EPA of its intent to conduct one or more of the tests required by this section for any of the chemical substances listed in Table 2 in paragraph (j) of this section within 30 days after receipt of the certified letter or publication of the FEDERAL REGISTER document described in paragraph (c)(8) of this section, all manufacturers and processors subject to this section with respect to that chemical substance who

are not already in violation of this section will be in violation of this section.

(10) If a problem occurs with the initiation, conduct, or completion of the required testing or the submission of the required data with respect to a chemical substance listed in Table 2 in paragraph (j) of this section, under the procedures in §§790.93 and 790.97 of this chapter, EPA may initiate termination proceedings for all testing exemptions with respect to that chemical substance and may notify persons in Tier 1 and Tier 2 that they are required to submit letters of intent to test or exemption applications within a specified period of time.

(11) If you are required to comply with this section, but your manufacturing or processing of a chemical substance listed in Table 2 in paragraph (j) of this section begins after the applicable compliance date referred to in paragraphs (c)(2), (c)(5), (c)(7), or (c)(10) of this section, you must either submit a letter of intent to test or apply to EPA for an exemption. The letter of intent to test or the exemption application must be received by EPA no later than the day you begin manufacturing or processing.

(d) *What must I do to comply with this section?* (1) To comply with this section you must either submit to EPA a letter of intent to test, or apply to and obtain from EPA an exemption from testing.

(2) For each test with respect to which you submit to EPA a letter of intent to test, you must conduct the testing specified in paragraph (h) of this section and submit the test data to EPA.

(3) You must also comply with the procedures governing test rule requirements in part 790 of this chapter, as modified by this section, including the submission of letters of intent to test or exemption applications, the conduct of testing, and the submission of data; Part 792—Good Laboratory Practice Standards of this chapter; and this section. The following provisions of 40 CFR part 790 do not apply to this section: Paragraphs (a), (d), (e), and (f) of §790.45; paragraph (a)(2) and paragraph (b) of §790.80; and §790.48.

(e) *If I do not comply with this section, when will I be considered in violation of it?* You will be considered in violation of this section as of 1 day after the date by which you are required to comply with this section.

(f) *How are EPA's data reimbursement procedures affected for purposes of this section?* If persons subject to this section are unable to agree on the amount or method of reimbursement for test data development for one or more chemical substances included in this section, any person may request a hearing as described in 40 CFR part 791. In the determination of fair reimbursement shares under this section, if the hearing officer chooses to use a formula based on production volume, the total production volume amount will include amounts of a chemical substance produced as an impurity.

(g) *Who must comply with the export notification requirements?* Any person who exports, or intends to export, a chemical substance listed in Table 2 in paragraph (j) of this section is subject to part 707, subpart D, of this chapter.

(h) *How must I conduct my testing?* The chemical substances identified by Chemical Abstract Service Registry Number (CAS No.) and chemical name in Table 2 in paragraph (j) of this section must be tested as follows:

(1) *Applicability.* This *in vitro* dermal absorption rate test standard must be used for all testing conducted under this section. In certain instances, modifications to the test standard may be considered. The procedures for applying for a modification to the test standard are specified in 40 CFR 790.55.

(2) *Source.* The test standard is based on the Protocol for *In Vitro* Percutaneous Absorption Rate Studies, referenced in paragraph (h)(8)(v) of this section.

(3) *Purpose.* In the assessment and evaluation of the characteristics of a chemical substance or mixture for which testing is required under this section (test substance), it is important to determine the rate of absorption of the test substance in cases where dermal exposure to the test substance in the workplace may result in systemic toxicity. This test standard is designed to develop data that describe the rate at which test substances are absorbed through the skin so that the

body burden of a test substance resulting from dermal exposure in the workplace can be better evaluated.

(4) *Principles of the test standard.* This test standard describes procedures for measuring a permeability constant (Kp) and two short-term dermal absorption rates for test substances in liquid form. The test standard utilizes *in vitro* diffusion cell techniques which allow absorption studies to be conducted with human cadaver skin. *In vitro* diffusion studies are necessary for measuring a Kp. This test standard specifies the use of static or flow-through diffusion cells and non-viable human cadaver skin. It also requires the use of radiolabeled test substances unless it can be demonstrated that procedures utilizing a non-radiolabeled test substance are able to measure the test substance with a sensitivity equivalent to the radiolabeled method.

(5) *Test procedure*—(i) *Choice of membrane*—(A) *Skin selection.* Human cadaver skin must be used in all testing conducted under this test standard. This test standard does not require use of live skin, or the maintenance of skin viability during the course of the experiment. However, the time elapsed between death and harvest of tissue must be reported.

(B) *Number of skin samples.* Data for the determination of a Kp must be obtained from a minimum of six skin samples and the skin samples must come from at least three different human subjects (two skin samples from each subject) in order to allow for biological variation between subjects. Data for the determination of each short-term (i.e., 10 minute and 60 minute) absorption rate must be obtained from a minimum of six skin samples and the skin samples must come from at least three different human subjects (two skin samples from each subject).

(C) *Anatomical region.* In order to minimize the variability in skin absorption measurements for these tests, samples of human cadaver skin must be obtained from the abdominal region of human subjects of known source and disease state.

(D) *Validation of human cadaver skin barrier.* Prior to conducting an experiment with the test substance, barrier properties of human cadaver skin must be pretested either by:

(*1*) Measuring the absorption of a standard compound such as tritiated water as discussed, for example, in the reference in paragraph (h)(8)(i) of this section;

(*2*) Determining an electrical resistance to an alternating current, at up to two volts; or

(*3*) Measuring trans-epidermal water loss from the stratum corneum.

(ii) *Preparation of membrane.* Full thickness skin must not be used. A suitable membrane must be prepared from skin either with a dermatome at a thickness of 200 to 500 micrometers (μm), or with heat separation by treating the skin at 60 °C for 45 seconds to 2 minutes after which the epidermis can be peeled from the dermis. These epidermal membranes can be stored frozen (-20 °C) for up to 3 months, if necessary, if they are frozen quickly and the barrier properties of the samples are confirmed immediately prior to commencement of the experiment.

(iii) *Diffusion cell design.* Either static or flow-through diffusion cells must be used in these studies. To ensure that an increase in concentration of the test substance in the receptor fluid does not alter penetration rate, the testing laboratory must verify that the concentration of the test substance in the receptor fluid is less than 10% of the initial concentration in the donor chamber. Concentration of the neat (i.e., undiluted) liquid must be taken as the density of the test substance.

(iv) *Temperature.* Skin must be maintained at a physiological temperature of 32 °C during the test.

(v) *Testing hydrophobic chemicals.* When testing hydrophobic chemicals, polyethoxyoleate (polyethylene glycol (PEG) 20 oleyl ether) must be added to the receptor fluid at a concentration of 6%.

(vi) *Vehicle.* If the test substance is a liquid at room temperature and does not damage the skin during the determination of Kp, it must be applied neat. If the test substance cannot be applied neat because it is a solid at room temperature or because it damages the skin when applied neat, it

must be dissolved in water. If the concentration of a hydrophobic test substance in water is not high enough so that a steady-state absorption can be obtained, the test substance must be dissolved in isopropyl myristate. A sufficient volume of liquid must be used to completely cover the skin and provide the amount of test substance as described in paragraph (h)(5)(vii) of this section.

(vii) *Dose*—(A) *Kp*. A Kp must be determined for each test chemical, except for methyl isoamyl ketone (MIAK; CAS No.: 110–12–3, Chemical Abstracts (CA) Index Name: 2-Hexanone, 5-methoxy-) and dipropylene glycol methyl ether (DPGME; CAS No.: 34590–94–8, CA Index Name: Propanol, 1(or 2)-(2-methoxymethylethoxy)-). An ''infinite dose'' of the test substance must be applied to the skin to achieve the steady-state rate of absorption necessary for calculation of a Kp. Infinite dose is defined as the concentration of a test substance required to give an undepletable reservoir on the surface of the skin. The actual concentration required to give an undepletable reservoir on the surface of the skin depends on the rate of penetration of the test substance. Preliminary studies may be necessary to determine this concentration. Percutaneous absorption must be determined under occluded (i.e., covered) conditions unless it is demonstrated that such conditions cause leakage of material or damage to the skin membrane as a result of unrealistically high pressures or excessive hydration. Skin barrier integrity must be verified at the end of the experiment by the methods discussed in paragraph (h)(5)(i)(D) of this section.

(B) *Short-term absorption rates.* Short-term absorption rates must be determined for all test chemicals. The dose of test chemical applied to the skin must be sufficient to completely cover the exposed skin surface. A minimum of four diffusion cells must be set up using skin from a single subject. Two diffusion cells must be terminated at 10 minutes. The remaining two diffusion cells must be terminated at 60 minutes. Skin absorption at each sampling time is the sum of the receptor fluid levels and the absorbed test substance that remains in the skin, as discussed, for example, in the reference in paragraph (h)(8)(iii) of this section. Unabsorbed chemical must be removed from the skin surface by washing gently with soap and water. This experiment must be repeated with skin from two additional subjects. In order to ensure reliable short-term absorption rates, percutaneous absorption must be determined under occluded conditions unless it is demonstrated that such conditions cause leakage of material or damage to the skin membrane as a result of unrealistically high pressures or excessive hydration.

(viii) *Study duration*—(A) *Kp*. The *in vitro* dermal absorption rate test must be performed until at least four absorption measurements per diffusion cell experiment are obtained during the steady-state absorption portion of the experiment. A preliminary study may be useful to establish time points for sampling. The required absorption measurements can be accomplished in an hour or two with fast-penetrating chemicals but may require 24 hours or longer for slow-penetrating chemicals. Unabsorbed test substance need not be removed from the surface of the skin after each experiment.

(B) *Short-term absorption rates.* The test substance must be applied to skin for durations of 10 and 60 minutes. At the end of the study, the unabsorbed test substance must be removed from the surface of the skin with soap and water and the amount absorbed into the skin and receptor fluid must be determined, as discussed, for example, in the reference in paragraph (h)(8)(iii) of this section.

(6) *Results*—(i) *Kp*. The Kp must be calculated by dividing the steady-state rate of absorption (measured in micrograms (μg) $\times$ hr^{-1} $\times$ centimeters $(cm)^{-2}$) by the concentration of the test substance (measured in $\mu g \times cm^{-3}$) applied to the skin. (For example, if the steady-state rate is 1 microgram $\times$ $hr^{-1} \times cm^{-2}$ and the concentration applied to the skin is 1,000 micrograms $\times$ cm^{-3}, then the Kp value is calculated to be 0.001 cm $\times$ hr^{-1}.) The mean and standard deviation of the calculated Kp values for all diffusion cell experiments must be determined.

(ii) *Short-term absorption rate.* The absorption rates ($\mu g \times hr^{-1} \times cm^{-2}$) must

be determined from the total amount of test substance found in the receptor fluid and skin after the 10-minute and 60-minute exposures for each diffusion cell experiment. The mean and standard deviation of 10-minute short-term absorption rates from all experiments must be calculated. The mean and standard deviation of 60-minute short-term absorption rates from all experiments must also be calculated.

(7) *Test report.* In addition to compliance with the TSCA Good Laboratory Practice Standards (GLPS) at 40 CFR part 792, the following specific information must be collected and reported by the date in paragraph (i) of this section:

(i) *Test systems and test methods.* (A) A description of the date, time, and location of the test, the name(s) of the person(s) conducting the test, the location of records pertaining to the test, as well as a GLPS statement. These statements must be certified by the signatures of the individuals performing the work and their supervisors.

(B) A description of the source, identity, and purity of the test substance and the source, identity, and handling of the test skin. There must be a detailed description of the test procedure and all materials, devices used and doses tested, as well as a detailed description and illustration of static or flow-through cell design. There must also be a description of the skin preparation method, including measurements of the skin membrane thickness.

(C) A description of the analytical techniques to be used, including their accuracy, precision, and detection limits (in particular for non-radiolabeled tests), and, if a radiolabel is used, there must be a description of the radiolabel (e.g., type, location of, and radiochemical purity of the label).

(D) All data must be clearly identified as to dose and specimen. Derived values (means, permeability coefficient, graphs, charts, etc.) are not sufficient.

(ii) *Conduct of study.* Data must be collected and reported on the following:

(A) Monitoring of testing parameters.

(B) Temperature of chamber.

(C) Receptor fluid pH.

(D) Barrier property validation.

(E) Analysis of receptor fluid for radioactivity or test chemical

(iii) *Results.* The mean Kp and mean short-term absorption rates must be presented along with their standard deviations and the number of diffusion cell experiments. In addition, all raw data from each individual diffusion cell must be retained to support the calculations of permeability constants and short-term absorption rates. When a radiolabeled test substance is used, a full balance of the radioactivity must be presented, including cell rinsing and stability of the test substance in the donor compartment.

(8) *References.* For background information on this test standard, the following references may be consulted. These references are available under docket ID number OPPT–2003–0006 at the EPA Docket Center, Rm. B102–Reading Room, EPA West, 1301 Constitution Ave., NW., Washington, DC, from 8:30 a.m. to 4:30 p.m., Monday through Friday, excluding legal holidays.

(i) Bronaugh, R.L., Stewart, R.F., and Simon, M. Methods for *In Vitro* Percutaneous Absorption Studies VII: Use of Excised Human Skin. *Journal of Pharmaceutical Sciences.* 75:1094–1097. 1986.

(ii) Bronaugh, R.L. and Stewart, R.F. Methods for *In Vitro* Percutaneous Absorption Studies IV: The Flow-Through Diffusion Cell. *Journal of Pharmaceutical Sciences.* 74:64–67. 1985.

(iii) Bronaugh, R.L., Stewart, R.F., and Storm, J.E. Extent of Cutaneous Metabolism During Percutaneous Absorption of Xenobiotics. *Toxicology and Applied Pharmacology*. 99:534–543. 1989.

(iv) Walker, J.D., Whittaker, C. and McDougal, J.N. Role of the TSCA Interagency Testing Committee in Meeting the U.S. Government Data Needs: Designating Chemicals for Percutaneous Absorption Rate Testing. *Dermatotoxicology*. F. Marzulli and H. Maibach, Eds. Taylor & Francis, Washington, DC. pp. 371–381. 1996.

(v) Bronaugh, R.L., and Collier, S.W. Protocol for *In Vitro* Percutaneous Absorption Studies. *In Vitro Percutaneous Absorption: Principles, Fundamentals, and Applications.* R.L. Bronaugh and H.I. Maibach, Eds. CRC Press, Boca Raton, FL. pp. 237–241. 1991.

(i) *Reporting requirements.* The reports submitted under this section must include the information specified in paragraph (h)(7) of this section. A final report for each chemical substance must be received by EPA by June 27, 2005, unless an extension is granted in writing pursuant to 40 CFR 790.55.

(j) *Designation of specific chemical substances for testing.* The chemical substances identified by chemical name, CAS No., and class in Table 2 of this paragraph must be tested in accordance with the testing requirements in paragraph (h) of this section and the requirements described in 40 CFR part 792.

TABLE 2—CHEMICAL SUBSTANCES DESIGNATED FOR TESTING

CAS No.	Chemical name	Class
75–05–8	Acetonitrile	1
75–15–0	Carbon disulfide	1
75–35–4	Vinylidene chloride	1
77–73–6	Dicyclopentadiene	1
78–59–1	Isophorone	1
78–87–5	Propylene dichloride	1
79–20–9	Methyl acetate	1
79–46–9	2-Nitropropane	1
91–20–3	Naphthalene	1
92–52–4	Biphenyl	1
98–29–3	*tert*-Butylcatechol	1
100–00–5	*p*-Nitrochlorobenzene	1
100–01–6	*p*-Nitroaniline	1
100–44–7	Benzyl chloride	1
106–42–3	*p*-Xylene	1
106–46–7	*p*-Dichlorobenzene	1
107–06–2	Ethylene dichloride	1
107–31–3	Methyl formate	1
108–03–2	1-Nitropropane	1
108–90–7	Chlorobenzene	1
108–93–0	Cyclohexanol	1
109–66–0	Pentane	1
109–99–9	Tetrahydrofuran	1
110–12–3	Methyl isoamyl ketone	1
111–84–2	Nonane	1
120–80–9	Catechol	1
122–39–4	Diphenylamine	1
123–42–2	Diacetone alcohol	1
127–19–5	Dimethyl acetamide	1
142–82–5	*n*-Heptane	1
150–76–5	*p*-Methoxyphenol	1
25013–15–4	Vinyl toluene	2
34590–94–8	Dipropylene glycol methyl ether.	2

(k) *Effective date* This section is effective on May 26, 2004.

[69 FR 22436, Apr. 26, 2004, as amended at 71 FR 18654, Apr. 12, 2006]

Subpart E—Product Properties Test Guidelines

SOURCE: 65 FR 78751, Dec. 15, 2000, unless otherwise noted.

§ 799.6755 TSCA partition coefficient (*n*-octanol/water), shake flask method.

(a) *Scope*—(1) *Applicability.* This section is intended to meet the testing requirements of the Toxic Substances Control Act (TSCA) (15 U.S.C. 2601).

(2) *Source.* The source material used in developing this TSCA test guideline is the Office of Prevention, Pesticides and Toxics (OPPTS) harmonized test guideline 830.7550 (August 1996, final guideline). The source is available at the address in paragraph (f) of this section.

(b) *Introductory information*—(1) *Prerequisites.* Suitable analytical method, dissociation constant, water solubility, and hydrolysis (preliminary test).

(2) *Coefficient of variation.* The coefficient of variation on the mean values reported by the participants of the Organization for Economic Coopertion and Development (OECD) Laboratory Intercomparison Testing, Part I, 1979, appeared to be dependent on the chemicals tested; it ranges from 0.17 to 1.03.

(3) *Qualifying statements.* This method applies only to pure, water soluble substances which do not dissociate or associate, and which are not surface active. In order to use the partition coefficient (P) as a screening test for bioaccumulation, it should be ascertained that the impurities in the commercial product are of minor importance. Testing of P (*n*-octanol/water) cannot be used as a screening test in the case of organometallic compounds.

(4) *Alternative methods.* High-pressure liquid chromatography (HPLC) methods described in the references in paragraphs (f)(3), (f)(4), and (f)(5) of this section may be considered as an alternative test method.

(c) *Method*—(1) *Introduction, purpose, scope, relevance, application, and limits of test.* The P of a substance between water and a lipophilic solvent (*n*-octanol) is one model variable which may be used to describe the transfer of a

substance from the aquatic environment into an organism and the potential bioaccumulation of the substance. Studies show a highly significant relationship between the P of different substances in the system water/*n*-octanol and their bioaccumulation in fish described in paragraph (f)(1) of this section.

(2) *Definitions—Partition coefficient* (P) is defined as the ratio of the equilibrium concentrations (C_i) of a dissolved substance in a two-phase system consisting of two largely immiscible solvents. The P therefore is the quotient of two concentrations and is usually given in the form of its logarithm to base 10 (log P). In this case *n*-octanol and water:

Equation 1:

$$P_{ow} = C_{n\text{-octanol}}/C_{water}$$

(3) *Reference substances.* The reference substances need not be employed in all cases when investigating a new substance. They are provided primarily so that calibration of the method may be performed from time to time and to offer the chance to compare the results when another method is applied. The values presented in table 1 of this section are not necessarily representative of the results which can be obtained with this test method as they have been derived from an earlier version of the test guideline.

TABLE 1—DATA FOR REFERENCE SUBSTANCES

Tested substance [1]	P_{ow} [2]	
Di(2-ethylhexyl)phthalate (OECD)	1.3×10^5	$(4.6 \times 10^4 - 2.8 \times 10^5)$
Hexachlorobenzene (OECD)	3.6×10^5	$(1.1 \times 10^5 - 8.3 \times 10^5)$
o-Dichlorobenzene European Economic Community (EEC)	5.1×10^3	$(1.5 \times 10^3 - 2.3 \times 10^4)$
Dibutyl phthalate (EEC)	1.3×10^4	$(1.7 \times 10^3 - 2.8 \times 10^4)$
Trichloroethylene (OECD)	2.0×10^3	$(5.2\times10^2 - 3.7\times10^3)$
Urea (OECD)	6.2×10^{-2}	$(2.0\times10^{-2}—2.4\times10^{-1})$

[1] Substances not tested: Ethyl acetate, 4-methyl-2,4-pentanediol.
[2] Total, mean, and range of mean values (in parentheses) submitted by the participants of the OECD or EEC Laboratory Intercomparison Testing.

(4) *Principle of the test method.* In order to determine a P, equilibrium between all interacting components of the system must be achieved, and the concentrations of the substances dissolved in the two phases must be determined. A study of the literature on this subject indicates that there are many different techniques which can be used to solve this problem, i.e. the thorough mixing of the two phases followed by their separation in order to determine the equilibrium concentration for the substance being examined.

(5) *Quality criteria*—(i) *Repeatability.* In order to assure the precision of the P, duplicate determinations are to be made under three different test conditions, whereby the quantity of substance specified as well as the ratio of the solvent volumes may be varied. The determined values of the P expressed as their common logarithms should fall within a range of ±0.3 log units.

(ii) *Sensitivity.* The sensitivity of the method is determined by the sensitivity of the analytical procedure. This should be sufficient to permit the assessment of values of P_{ow} up to 105 when the concentration of the solute in either phase is not more than 0.01 mol/Liter (L). The substance being tested must not be water insoluble (mass concentration $\rho \leq 10^{-6}$ gram (g)/L.

(iii) *Specificity.* The Nernst Partition Law applies only at constant temperature, pressure, and pH for dilute solutions. It strictly applies to a pure substance dispersed between two pure solvents. If several different solutes occur in one or both phases at the same time, this may affect the results. Dissociation or association of the dissolved molecules result in deviations from the Nernst Partition Law. Such deviations are indicated by the fact that the P becomes dependent upon the concentration of the solution. Because of the multiple equilibria involved, this test guideline should not be applied to

ionizable compounds without corrections being made. The use of buffer solutions in place of water should be considered for such compounds.

(iv) *Possibility of standardization.* This method can be standardized.

(d) *Description of the test procedure*—(1) *Preparations: Preliminary estimate of the P.* The size of the P can be estimated either by means of calculation or by use of published solubilities of the test substance in the pure solvents. Alternatively, it may be roughly determined by performing a simplified preliminary test. For this:

Equation 2:

$$P_{estimate} = (\text{saturation } C_{n\text{-octanol}})/(\text{saturation } C_{water})$$

(2) *Preparation of the solvents*—(i) *n-Octanol.* The determination of the P should be carried out with analytical grade *n*-octanol. Inorganic contaminants can be removed from commercial *n*-octanol by washing with acid and base, drying, and distilling. More sophisticated methods will be required to separate the *n*-octanol from organic contaminants with similar vapor pressure if they are present.

(ii) *Water.* Distilled water or water twice-distilled from glass or quartz apparatus should be employed. Water taken directly from an ion exchanger should not be used.

(iii) *Presaturation of the solvents.* Before a P is determined, the phases of the solvent system are mutually saturated by shaking at the temperature of the experiment. For doing this, it is practical to shake two large stock bottles of purified *n*-octanol or distilled water each with a sufficient quantity of the other solvent for 24 hours on a mechanical shaker, and then to let them stand long enough to allow the phases to separate and to achieve a saturation state.

(3) *Preparation for the test.* The entire volume of the two-phase system should nearly fill the test vessel. This will help prevent loss of material due to volatilization. The volume ratio and quantities of substance to be used are fixed by the following:

(i) The preliminary assessment of the P as discussed in paragraph (d)(1) of this section).

(ii) The minimum quantity of test substance required for the analytical procedure.

(iii) The limitation of a maximum concentration in either phase of 0.01 mol/L.

(iv) Three tests are carried out. In the first, the calculated volume ratio is added; in the second, twice the volume of *n*-octanol is added; and in the third, half the volume of *n*-octanol is added.

(4) *Test substance.* The test substance should be the purest available. For a material balance during the test a stock solution is prepared in *n*-octanol with a mass concentration between 1 and 100 milligram/milliliter (mg/mL). The actual mass concentration of this stock solution should be precisely determined before it is employed in the determination of the P. This solution should be stored under stable conditions.

(5) *Test conditions.* The test temperature should be kept constant (±1 °C) and lie in the range of 20–25 °C.

(6) *Performance of the test*—(i) *Establishment of the partition equilibrium.* Duplicate test vessels containing the required, accurately measured amounts of the two solvents together with the necessary quantity of the stock solution should be prepared for each of the test conditions. The *n*-octanol parts should be measured by volume. The test vessels should either be placed in a suitable shaker or shaken by hand. A recommended method is to rotate the centrifuge tube quickly through 180° about its transverse axis so that any trapped air rises through the two phases. Experience has shown that 50 such rotations are usually sufficient for the establishment of the partition equilibrium. To be certain, 100 rotations in 5 minutes are recommended.

(ii) *Phase separation.* In order to separate the phases, centrifugation of the mixture should be carried out. This should be done in a laboratory centrifuge maintained at room temperature, or, if a non-temperature-controlled centrifuge is used, the centrifuge tubes should be reequilibrated at the test temperature for at least 1 hour before analysis.

(7) *Analysis.* (i) For the determination of the P, it is necessary to analyze the concentrations of the test substance in both phases. This may be done by taking an aliquot of each of the two phases from each tube for each test condition and analyzing them by the chosen procedure. The total quantity of substances present in both phases should be calculated and compared with the quantity of the substance originally introduced.

(ii) The aqueous phase should be sampled by the following procedure to minimize the risk of including traces of the *n*-octanol: A glass syringe with a removable needle should be used to sample the water phase. The syringe should initially be partially filled with air. Air should be gently expelled while inserting the needle through the *n*-octanol layer. An adequate volume of aqueous phase is withdrawn into the syringe. The syringe is quickly removed from the solution and the needle detached. The contents of the syringe may then be used as the aqueous sample.

(iii) The concentration in the two-separated phases should preferably be determined by a substance-specific method. Examples of physical-chemical determinations which may be appropriate are:

(A) Photometric methods.

(B) Gas chromatography.

(C) HPLC.

(D) Back-extraction of the aqueous phase and subsequent gas chromatography.

(e) *Data and reporting*—(1) *Treatment of results.* The reliability of the determined values of P can be tested by comparison of the means of the duplicate determinations with the overall mean.

(2) *Test report.* The following should be included in the report:

(i) Name of the substance, including its purity.

(ii) Temperature of the determination.

(iii) The preliminary estimate of the P and its manner of determination.

(iv) Data on the analytical procedures used in determining concentrations.

(v) The measured concentrations in both phases for each determination. This means that a total of 12 concentrations must be reported.

(vi) The weight of the test substance, the volume of each phase employed in each test vessel, and the total calculated amount of test substance present in each phase after equilibration.

(vii) The calculated values of the P and the mean should be reported for each set of test conditions as should the mean for all determinations. If there is a suggestion of concentration dependency of the P, this should be noted in the report.

(viii) The standard deviation of individual P values about their mean should be reported.

(ix) The mean P from all determinations should also be expressed as its logarithm (base 10).

(f) *References.* For additional background information on this test guideline, the following references should be consulted. These references are available from the TSCA Nonconfidential Information Center, Rm. NE-B607, Environmental Protection Agency, 401 M St., SW., Washington, DC, 12 noon to 4 p.m., Monday through Friday, excluding legal holidays.

(1) Neely, W.B. et al. Partition Coefficients to Measure Bioconcentration Potential of Organic Chemicals in Fish. *Environmental Science and Technology* 8:1113 (1974).

(2) Leo, A. et al. Partition Coefficients and Their Uses. *Chemical Reviews* 71:525 (1971).

(3) Miyake, K. and H. Terada, Direct measurements of partition coefficients in an octanol-water system. *Journal of Chromatography* 157:386 (1978).

(4) Veith G.D. and R.T. Morris, A Rapid Method for Estimating Log P for Organic Chemicals, EPA–600/3–78–049 (1978).

(5) Mirrless, M.S. et al., Direct measurement of octanol-water partition coefficient by high pressure liquid chromatography. *Journal of Medicinal Chemistry* 19:615 (1976).

(6) EPA Draft Guidance of September 8, 1978 (F–16).

(7) Konemann H. et al. Determination of log P_{oct} values of chlorosubstituted benzenes, toluenes, and anilines by high performance liquid chromatography on ODS silica, *Journal of Chromatography* 178:559 (1979).

(8) *Organization for Economic Cooperation and Development*, Guidelines for The Testing of Chemicals, OECD 107, Partition Coefficient (*n*-octanol/water) (Shake Flask Method, Adopted 27 July 1995), OECD, Paris, France.

§ 799.6756 TSCA partition coefficient (*n*-octanol/water), generator column method.

(a) *Scope*—(1) *Applicability*. This section is intended to meet the testing requirements of the Toxic Substances Control Act (TSCA) (15 U.S.C. 2601).

(2) *Source*. The source material used in developing this TSCA test guideline is the Office of Pollution Prevention, Pesticides and Toxic Substances (OPPTS) harmonized test guideline 830.7560 (August 1996, final guideline). This source is available at the address in paragraph (e) of this section.

(b)(1) *Purpose*. (i) The measurement and estimation of the *n*-octanol/water partition coefficient (K_{ow}), has become the cornerstone of a myriad of structure-activity relationships (SAR) property. The coefficient has been used extensively for correlating structural changes in drugs with changes observed in biological, biochemical, or toxic effects. These correlations are then used to predict the effect of a new drug for which a K_{ow} could be measured.

(ii) In the study of the environmental fate of organic chemicals, the K_{ow} has become a key parameter. K_{ow} is correlated to water solubility, soil/sediment sorption coefficient, and bioconcentration and is important to SAR.

(iii) Of the three properties that can be estimated from K_{ow}, water solubility is the most important because it affects both the fate and transport of chemicals. For example, highly soluble chemicals become quickly distributed by the hydrologic cycle, have low-sorption coefficients for soils and sediments, and tend to be more easily degraded by microorganisms. In addition, chemical transformation processes such as hydrolysis, direct photolysis, and indirect photolysis (oxidation) tend to occur more readily if a compound is soluble.

(iv) Direct correlations between K_{ow} and both the soil/sediment sorption coefficient and the bioconcentration factor are to be expected. In these cases, compounds that are more soluble in *n*-octanol (more hydrophobic and lipophilic) would be expected to partition out of the water and into the organic portion of soils/sediments and into lipophilic tissue. The relationship between K_{ow} and the bioconcentration factor, are the principal means of estimating bioconcentration factors. This relationship is discussed in the reference listed in paragraph (e)(14) of this section. These factors are then used to predict the potential for a chemical to accumulate in living tissue.

(v) This section describes a method for determining the K_{ow} based on the dynamic coupled column liquid chromatographic (DCCLC) technique, a technique commonly referred to as the generator column method. The method described herein can be used in place of the standard shake-flask method specified in § 799.6755 for compounds with a $\log_{10}K_{ow}$ greater than 1.0.

(2) *Definitions*. The following definitions apply to this section.

Extractor column is used to extract the solute from the aqueous solution produced by the generator column. After extraction onto a bonded chromatographic support, the solute is eluted with a solvent/water mixture and subsequently analyzed by high-performance liquid chromatography (HPLC), gas chromatography (GC), or any other analytical procedure. A detailed description of the preparation of the extractor column is given in paragraph (c)(1)(i) of this section.

Generator column is used to partition the test substance between the *n*-octanol and water phases. The column in figure 1 in paragraph (c)(1)(i)(A)(*2*) of

this section is packed with a solid support and is coated with the test substance at a fixed concentration in *n*-octanol. The test substance is eluted from the column with water and the aqueous solution leaving the column represents the equilibrium concentration of the test substance that has partitioned from the *n*-octanol phase into the water phase. Preparation of the generator column is described in paragraph (c)(1)(i) of this section.

n-Octanol/water partition coefficient (K_{ow}) is defined as the ratio of the molar concentrations of a chemical in *n*-octanol and water, in dilute solution. The coefficient K_{ow} is a constant for a given chemical at a given temperature. Since K_{ow} is the ratio of two molar concentrations, it is a dimensionless quantity. Sometimes K_{ow} is reported as the decadic logarithm ($\log_{10}K_{ow}$). In this equation, $C_{octanol}$ and C_{water} are the molar concentration of the solute in *n*-octanol and water, respectively, at a given temperature. This test procedure determines K_{ow} at 25 ±0.05 °C. The mathematical statement of K_{ow} is:

Equation 1:

$$K_{ow} = C_{octanol}/C_{water}$$

Response factor (RF) is the solute concentration required to give a one unit area chromatographic peak or one unit output from the HPLC recording integrator at a particular recorder and detector attenuation. The factor is required to convert from units of area to units of concentration. The determination of the RF is given in paragraph (c)(3)(iii)(C)(*2*) of this section.

Sample loop is a 1/16 inch (in) outside diameter (O.D.) (1.6 millimeter (mm)) stainless steel tube with an internal volume between 20 and 50 µL. The loop is attached to the sample injection valve of the HPLC and is used to inject standard solutions into the mobile phase of the HPLC when determining the RF for the recording integrator. The exact volume of the loop must be determined as described in paragraph (c)(3)(iii)(C)(*1*) of this section when the HPLC method is used.

(3) *Principle of the test method.* (i) This test method is based on the DCCLC technique for determining the aqueous solubility of organic compounds. The development of this test method is described in the references listed in paragraphs (e)(6), (e)(12), and (e)(19) of this section. The DCCLC technique utilizes a generator column, extractor column, and HPLC coupled or interconnected to provide a continuous closed-flow system. Aqueous solutions of the test compound are produced by pumping water through the generator column that is packed with a solid support coated with an approximately 1.0% weight/weight (w/w) solution of the compound in *n*-octanol. The aqueous solution leaving the column represents the equilibrium concentration of the test chemical which has partitioned from the *n*-octanol phase into the water phase. The compound is extracted from the aqueous solution onto an extractor column, then eluted from the extractor column with a solvent/water mixture and subsequently analyzed by HPLC using a variable wavelength ultraviolet (UV) absorption detector operating at a suitable wavelength. Chromatogram peaks are recorded and integrated using a recording integrator. The concentration of the compound in the effluent from the generator column is determined from the mass of the compound (solute) extracted from a measured volume of water (solvent). The K_{ow} is calculated from the ratio of the molar concentration of the solute in the 1.0% (w/w) *n*-octanol and molar concentration of the solute in water as determined using the generator column technique.

(ii) Since the HPLC method is only applicable to compounds that absorb in the UV, an alternate GC method, or any other reliable quantitative procedure must be used for those compounds that do not absorb in the UV. In the GC method the saturated solutions produced in the generator column are extracted using an appropriate organic solvent that is subsequently injected into the GC, or any other suitable analytical device, for analysis of the test compound.

(4) *Reference chemicals.* (i) Columns 2, 3, 4, and 5 of table 1 in paragraph (b)(4)(ii) of this section list the experimental values of the decadic logarithm of the *n*-octanol/water partition coefficient ($\log_{10}K_{ow}$) at 25 °C for a number of organic chemicals as obtained from the

scientific literature. These values were obtained by any one of the following experimental methods: Shake-flask; generator column; reverse-phase HPLC; or reverse-phase thin-layer chromatography, as indicated in the footnotes following each literature citation. The estimation method of Hawker and Connell as described in paragraph (e)(8) of this section, correlates $\log_{10}K_{ow}$ with the total surface area of the molecule and was used to estimate $\log_{10}K_{ow}$ for biphenyl and the chlorinated biphenyls. These estimated values are listed in column 7 of table 1 in paragraph (b)(4)(ii) of this section. Recommended values of $\log_{10}K_{ow}$ were obtained by critically analyzing the available experimental and estimated values and averaging the best data. These recommended values are listed in column 8 of table 1 in paragraph (b)(4)(ii) of this section.

(ii) The recommended values listed in table 1 of this section have been provided primarily so that the generator column method can be calibrated and to allow the chemical laboratory the opportunity to compare its results with these values. The testing laboratory has the option of choosing its reference chemicals, but references must be given to establish the validity of the measured values of $\log_{10}K_{ow}$.

TABLE 1—N-OCTANOL/WATER PARTITION COEFFICIENT AT 25 °C FOR SOME REFERENCE COMPOUNDS

Chemical	Experimental $\log_{10}K_{ow}$				Estimated $\log_{10}K_{ow}$		Recommended $\log_{10}K_{ow}$
	Hansch and Leo[1]	Generator Column Method	Banerjee[2]	Other values	Hansch and Leo[3]	Hawker and Connell[4]	
Ethyl acetate	0.73, 0.66	[5]0.68	—	—	0.671	—	[17]0.685
1-Butanol	0.88, 0.89, 0.32, 0.88	[5]0.785	—	—	0.823	—	[23]0.852
1-Pentanol	1.28, 1.40	[5]1,53	—	—	1.35	—	[17]1.39
Nitrobenzene	1.85, 1.88, 1.79	[5]1.85	1.83	[6]1.82	1.89	—	[17]1.84
Benzene	2.15, 2.13	—	2.12	—	2.14	—	[17]2.14
Trichloroethylene	2.29	[5]2.53	2.42	—	2.27	—	[17]2.38
Chlorobenzene	2.84, 2.46	[7]2.98	—	[8]2.84	2.86	—	[18]2.80
o-Dichlorobenzene	3.38	[7]3.38	3.40	[8]3.38	3.57	—	[17]3.42
n-Propylbenzene	3.66, 3.66, 3.68, 3.57	[5]3.69	—	—	3.85	—	[17]3.69
Biphenyl	3.95, 4.17, 4.09, 4.04	[7]3.67, [9]3.89, [10]3.79	4.04	[6]3.75	4.03	4.09	[17]3.96
2-Chlorobiphenyl	—	[7]4.50, [9]4.38	—	[10]3.90, [11]3.75, [12]4.59, [13]4.54	—	4.99	[19]4.49
1,2,3,5-Tetrachlorobenzene	—	[7]4.65	4.46	—	4.99	—	[17]4.70
2,2′-Dichlorobiphenyl	—	[9]4.90	—	[9]4.90, [10]3.63, [11]3.55, [14]4.51, [15]5.02	—	4.65	[20]4.80
Pentachlorobenzene	—	[7]5.03	4.94	—	5.71	—	[24]4.99
2,4,5-Trichlorobiphenyl	—	[7]5.51, [9]5.81	—	[10]5.67, [10]5.86, [15]5.77	—	5.60	[17]5.70
2,3,4,5-Tetrachlorobiphenyl	—	[4]6.18, [7]5.72	—	—	—	6.04	[17]5.98
2,2′,4,5,5′-Pentachlorobi-phenyl	6.11	[9]6.50, [7]5.92	—	[13]6.11, [12]6.85	—	6.38	[17]6.31
2,2′,3,3′,6,6′-Hexachloro-biphenyl	—	[4]5.76, [7]6.63, [9]6.81	—	—	—	6.22	[17]6.36
2,2′,3,3′,4,4′,6-Heptachlorobiphenyl	—	[7]6.68	—	—	—	7.11	[17]6.90
2,2′,3,3′,5,5′,6,6′-Octachlorobiphenyl	—	[7]7.11, [9]7.14	—	[12]8.42	—	7.24	[21]7.16
2,2′,3,3′,4, 4′,5,6,6′-Nona-chlorobiphenyl	—	[4]7.52	—	—	—	7.74	[17]7.63
2,2′,3,3′,4, 5,5′6,6′-Nona-chlorobiphenyl	—	[7]8.16	—	—	—	7.71	[17]7.94
Decachlorobiphenyl	—	[7]8.26, [9]8.20	—	[12]9.60	—	8.18	[22]8.21

[1] Hansch and Leo (1979). Shake-flask method in paragraph (e)(8) of this section.

[2] Banerjee, Yalkowski, and Valvani (1980). Shake-flask method in paragraph (e)(1) of this section.
[3] Hansch and Leo (1984). Estimates $\log_{10}K_{ow}$ using the CLogP3 computer program in paragraph (e)(9) of this section.
[4] Hawker and Connell (1988). Generator column method and an estimation method correlating $\log_{10}K_{ow}$ with the total surface area of the molecule in paragraph (e)(8) of this section.
[5] Tewari et al. (1982). Generator column method in paragraph (e)(14) of this section.
[6] Veith, Austin, and Morris (1979). Reverse-phase HPLC method in paragraph (e)(16) of this section.
[7] Miller et al. (1984). Generator column method in paragraph (e)(11) of this section.
[8] Chiou and Schmedding (1982). Shake-flask method in paragraph (e)(4) of this section.
[9] Woodburn, Doucette, and Andren (1984). Generator column method in paragraph (e)(19) of this section.
[10] Rapaport and Eisenreich (1984). Reverse-phase HPLC method in paragraph (e)(13) of this section.
[11] Woodburn (1982). Reverse-phase HPLC method in paragraph (e)(18) of this section.
[12] Bruggemann, Van der Steen, and Hutzinger (1978). Shake-flask method in paragraph (e)(2) of this section.
[13] Tulp and Hutzinger (1978). Shake-flask method in paragraph (e)(15) of this section.
[14] Chiou, Porter, and Schmedding (1983). Shake-flask method in paragraph (e)(5) of this section.
[15] Bruggemann, Van Der Steen , and Hutzinger (1982). Reverse-phase thin-layer chromatography in paragraph (e)(2) of this section.
[16] Chiou et al. (1977). Shake-flask method in paragraph (e)(3) of this section.
[17] Average value using all the data.
[18] Average value using all the data except the datum point 2.46.
[19] Average value using all the data except the data points 3.90 and 3.75.
[20] Average value using all the data except the data points 3.63 and 3.55.
[21] Average value using all the data except the datum point 8.42.
[22] Average value using all the data except the datum point 9.60.
[23] Average value using all the data except the datum point 0.32.
[24] Average value using all the data excluding the estimated datum point 5.71.

(5) *Applicability and specificity*. The test guideline is designed to determine the K_{ow} of solid or liquid organic chemicals in the range $\log_{10}K_{ow}$ 1.0 to ≤6.0 (10 to ≤10^6).

(c) *Test procedure*—(1) *Test conditions*—(i) *Special laboratory equipment*—(A)(*1*) *Generator column*. Either of two different methods for connecting to the generator column shall be used depending on whether the eluted aqueous phase is analyzed by HPLC (Procedure A, as described in paragraph (c)(3)(iii) of this section) or by solvent extraction followed by GC analysis, or any other reliable method of solvent extract (Procedure B, as described in paragraph (c)(3)(iv) of this section).

(*2*)(*i*) The design of the generator column is shown in the following figure 1:

Figure 1—Generator Column

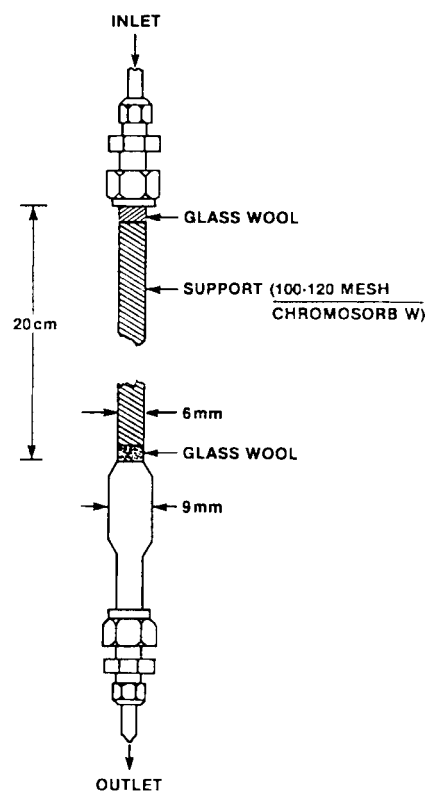

(*ii*) The column consists of a 6 mm (¼ in) O.D. pyrex tube joined to a short enlarged section of 9 mm pyrex tubing

which in turn is connected to another section of 6 mm (¼ in) O.D. pyrex tubing. Connections to the inlet teflon tubing (⅛ in O.D.) and to the outlet stainless steel tubing (1⁄16 in O.D.) are made by means of stainless steel fittings with teflon ferrules. The column is enclosed in a water jacket for temperature control as shown in the following figure 2:

FIGURE 2—SETUP SHOWING GENERATOR COLUMN ENCLOSED IN A WATER JACKET AND OVERALL ARRANGEMENT OF THE APPARATUS USED IN GC METHOD

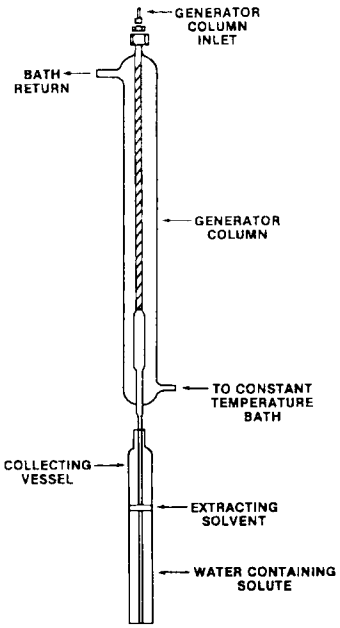

(B) Constant temperature bath with circulation pump-bath and capable of controlling temperature to 25 ±0.05 °C. (Procedures A and B, as described in paragraphs (c)(3)(iii) and (c)(3)(iv) of this section, respectively).

(C) HPLC equipped with a variable wavelength UV absorption detector operating at a suitable wavelength and a recording integrator (Procedure A, as described in paragraph (c)(3)(iii) of this section).

(D) Extractor column—6.6 × 0.6 centimeter (cm) stainless steel tube with end fittings containing 5 micron frits filled with a superficially porous phase packing (such as Bondapack C_{18} Corasil: Waters Associates) (Procedure A, as described in paragraph (c)(3)(iii) of this section).

(E) Two 6-port high-pressure rotary switching valves (Procedure A, as described in paragraph (c)(3)(iii) of this section).

(F) Collection vessel—8 × ¾ in section of pyrex tubing with a flat bottom connected to a short section of ⅜ in O.D. borosilicate glass tubing. The collecting vessel is sealed with a ⅜ in teflon cap fitting (Procedure B, as described in paragraph (c)(3)(iv) of this section).

(G) GC, or any other reliable analytic equipment, equipped with a detector sensitive to the solute of interest (Procedure B, as described in paragraph (c)(3)(iv) of this section).

(ii) *Purity of n-octanol and water.* Purified *n*-octanol, described in paragraph (c)(2)(i) of this section, and water meeting appropriate American Society for Testing and Materials Type II standards, or an equivalent grade, are recommended to minimize the effects of dissolved salts and other impurities. An ASTM Type II water standard is presented in the reference listed in paragraph (e)(20) of this section).

(iii) *Purity of solvents.* It is important that all solvents used in this method be reagent or HPLC grade and contain no impurities which could interfere with the determination of the test compound.

(iv) *Reference compounds.* In order to ensure that the HPLC system is working properly, at least two of the reference compounds listed in table 1 in paragraph (b)(4)(ii) of this section should be run. Reference compounds shall be reagent or HPLC grade to avoid interference by impurities.

(2) *Preparation of reagents and solutions*—(i) *n-Octanol and water.* Very pure *n*-octanol can be obtained as follows: Wash pure *n*-octanol (minimum 98% pure) sequentially with 0.1N H^2SO_4, with 0.1N NaOH, then with distilled water until neutral. Dry the *n*-octanol with magnesium sulfate and distill twice in a good distillation column under reduced pressure [b.p. about 80 °C at 0.27 kPa (2 torr)]. The *n*-octanol produced should be at least 99.9% pure. Alternatively, a grade equivalent to Fisher Scientific Co. No. A–402 ''Certified

Octanol–1'' can be used. Reagent-grade water shall be used throughout the test procedure, such as ASTM Type II water, or an equivalent grade, as described in paragraph (c)(1)(ii) of this section.

(ii) *Presaturated water.* Prepare presaturated water with *n*-octanol to minimize the depletion of *n*-octanol from the column when measuring the $K_{ow}$of a test chemical. This is very important when the test chemical is lipophilic and the $\log_{10}K_{ow} \leq 4$.

(3) *Performance of the test.* Initially, an approximately 1.0% (w/w) solution of the test substance in *n*-octanol is prepared. Precise measurement of the solute concentration in this solution is required for the K_{ow}calculation. Subsequently, the 1.0% (w/w) solution is coated on the generator column and using either Procedure A or Procedure B as described in paragraphs (c)(3)(iii) and (c)(3)(iv) of this section, the molar concentration of the test substance in reagent-grade water is determined.

(i) *Test solution.* The test solution consists of an approximately 1.0% (w/w) solution of the test substance in *n*-octanol. A sufficient quantity (about 10–20 milliliter (mL)) of the test solution should be prepared to coat the generator column. The solution is prepared by accurately weighing out, using a tared bottle, quantities of both the test substance and *n*-octanol required to make a 1.0% (w/w) solution. When the weights are measured precisely (to the nearest 0.1 milligram (mg)), knowing the density of *n*-octanol (0.827 gram (g)/mL at 25 °C), then the molar concentration of the test substance in the *n*-octanol is sufficiently accurate for the purposes of the test procedure. If desired, however, a separate analytical determination (e.g., by GC, or any other reliable analytical method) may be used to check the concentration in the test solution. If storage is required, the test solution should be kept stoppered to prevent volatilization of the test chemical.

(ii) *Test procedures.* Prior to the determination of the K_{ow} of the test chemical, two procedures shall be followed:

(A) The saturated aqueous solution leaving the generator column shall be tested for the presence of an emulsion, using a Tyndall procedure (i.e. light scattering). If colloids are present, they must be removed prior to injection into the extractor column by lowering the flow rate of water.

(B) The efficiency of removal of the solute (the test chemical) by solvent extraction from the extractor column shall be determined and used in the determination of the K_{ow} of the test chemical.

(iii) *Procedure A—HPLC method.* (A) Procedure A covers the determination of the aqueous solubility of compounds which absorb in the UV. Two reciprocating piston pumps deliver the mobile phase (water or solvent/water mixture) through two 6-port high-pressure rotary valves and a 30×0.6 cm C_{18} analytical column to a UV absorption detector operating at a suitable wavelength. Chromatogram peaks are recorded and integrated with a recording integrator. One of the 6-port valves is the sample injection valve used for injecting samples of standard solutions of the solute in an appropriate concentration for determining RFs or standard solutions of basic chromate for determining the sample-loop volume. The other 6-port valve in the system serves as a switching valve for the extractor column which is used to remove solute from the aqueous solutions. The HPLC analytical system is shown schematically in the following figure 3:

FIGURE 3—SCHEMATIC OF HPLC—GENERATOR COLUMN FLOW SYSTEM

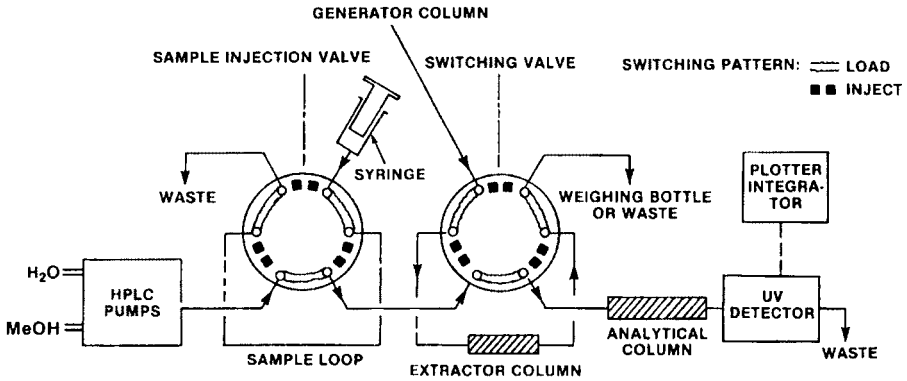

(B) The general procedure for analyzing the aqueous phase after equilibration is as follows; a detailed procedure is given in paragraph (c)(3)(iii)(C)(*4*) of this section:

(*1*) Direct the aqueous solution from the generator column to ''Waste'' in figure 3 in paragraph (c)(3)(iii)(A) of this section with the switching valve in the inject position in order to equilibrate internal surfaces with the solution, thus insuring that the analyzed sample would not be depleted by solute adsorption on surfaces upstream from the valve.

(*2*) At the same time, water is pumped from the HPLC pumps in order to displace the solvent from the extractor column.

(*3*) The switching valve is next changed to the load position to divert a sample of the solution from the generator column through the extractor column, and the liquid leaving the extractor column is collected in a tared weighing bottle. During this extraction step, the HPLC mobile phase is changed to a solvent/water mixture to condition the analytical column.

(*4*) After the desired volume of sample is extracted, the switching valve is returned to the inject position for elution from the extractor column and analysis. Assuming that all of the solute was adsorbed by the extractor column during the extraction step, the chromatographic peak represents all of the solute in the extracted sample, provided that the extraction efficiency is 100%. If the extraction efficiency is less than 100%, then the extraction efficiency shall be measured and used to determine the actual amount of the solute extracted.

(*5*) The solute concentration in the aqueous phase is calculated from the peak area, the weight of the extracted liquid collected in the weighing bottle, the extraction efficiency, and the RF.

(C)(*1*) *Determination of the sample-loop volume.* Accurate measurement of the sample loop may be accomplished by using a spectrophotometric method such as the one described in the reference listed in paragraph (e)(6) of this section. For this method, measure absorbance, A_{loop}, at 373 nanometers (nm) for at least three solutions, each of which is prepared by collecting from the sample valve an appropriate number, n, of loopfuls of an aqueous stock solution of K_2CrO_4 (1.3% by weight) and diluting to 50 mL with 0.2% KOH. (For a 20 µL loop, use n = 5; for a 50 µL loop, use n = 2.) Also measure the absorbance, A_{stock}, of the same stock solution after diluting 1:500 with 0.2% KOH. Calculate the loop volume to the nearest 0.1 µL using the relation:

Equation 2:

$$V_{loop} = \left(A_{loop}/A_{stock}\right)\left(10^{-4}/n\right)$$

(*2*) *Determination of the RF.* (*i*) For all determinations adjust the mobile phase solvent/water ratio and flow rate to obtain a reasonable retention time on the HPLC column. For example, typical concentrations of organic solvent in the mobile phase range from 50

to 100% while flow rates range from 1 to 3 mL/minutes (min); these conditions often give a 3 to 5 min retention time.

(*ii*) Prepare standard solutions of known concentrations of the solute in a suitable solvent. Concentrations must give a recorder response within the maximum response of the detector. Inject samples of each standard solution into the HPLC system using the calibrated sample loop. Obtain an average peak area from at least three injections of each standard sample at a set detector absorbance unit full scale (AUFS), i.e., at the same absorbance scale attenuation setting.

(*iii*) Calculate the RF from the following equation:

Equation 3:

$$\text{Response Factor (RF)} = \frac{\text{Concentration mol/L}}{(\text{Average Area})\,(\text{AUFS})}$$

(*3*) *Loading of the generator column.* (*i*) The design of the generator column was described in paragraph (c)(1)(i) of this section and is shown in figure 1 in paragraph (c)(1)(i)(A)(*2*)(*i*) of this section. To pack the column, a plug of silanized glass wool is inserted into one end of the 6 mm pyrex tubing. Silanized diatomaceous silica support (about 0.5g of 100–120 mesh Chromosorb W chromatographic support material) is poured into the tube with tapping and retained with a second plug of silanized glass wool.

(*ii*) The column is loaded by pulling the test solution through the dry support with gentle suction and then allowing the excess solution to drain out. After loading the column, draw water up through the column to remove any entrapped air.

(*4*) *Analysis of the solute.* Use the following procedure to collect and analyze the solute:

(*i*) With the switching valve in figure 3 in paragraph (c)(3)(iii)(A) of this section in the inject position (i.e., water to waste), pump water through the generator column at a flow rate of approximately 1 mL/min for approximately 15 min to bring the system into equilibrium. Pump water to the generator column by means of a minipump or pressurized water reservoir as shown in the following figure 4:

FIGURE 4—WATER RESERVOIR FOR GC METHOD

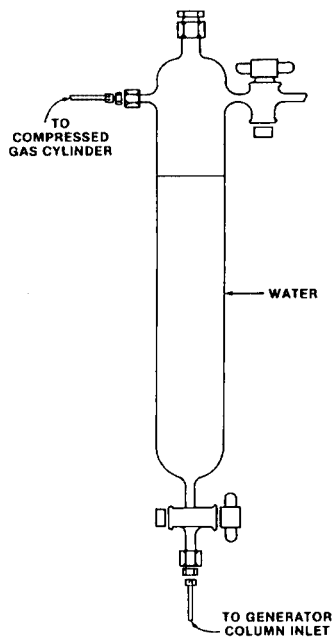

(*ii*) Flush out the organic solvent that remains in the system from previous runs by changing the mobile phase to 100% H_2O and allowing the water to reach the HPLC detector, as indicated by a negative reading. As soon as this occurs, place a 25 mL weighing bottle (weighed to the nearest mg) at the waste position and immediately turn the switching valve to the load position.

(*iii*) Collect an amount of water from the generator column (as determined

by trial and error) in the weighing bottle, corresponding to the amount of solute adsorbed by the extractor column that gives a reasonable detector response. During this extraction step, switch back to the original HPLC mobile phase composition, i.e., solvent/water mixture, to condition the HPLC analytical column.

(*iv*) After the desired volume of sample has been extracted, turn the switching valve back to the inject position in figure 3 in paragraph (c)(3)(iii)(A) of this section. As soon as the switching valve is turned to the inject position, remove the weighing bottle, cap it and replace it with the waste container; at the same time turn on the recording integrator. The solvent/water mobile phase will elute the solute from the extractor column and transfer the solute to the HPLC analytical column.

(*v*) Determine the weight of water collected to the nearest mg and record the corresponding peak area. Using the same AUFS setting repeat the analysis of the solute at least two more times and determine the average ratio of peak area to grams of water collected. In this equation, S = solubility (M), RF = response factor, V_{loop} = sample-loop volume (L), and R = ratio of area to grams of water. Calculate the solute solubility in water using the following equation:

Equation 4:

$$S = (997\ g/L)(RF)(V_{loop})(AUFS)(R)$$

(iv) *Procedure B—GC Method.* In the GC method, or any other reliable quantitative method, aqueous solutions from the generator column enter a collecting vessel in figure 2 in paragraph (c)(1)(i)(A)(*2*)(*ii*) of this section containing a known weight of extracting solvent which is immiscible in water. The outlet of the generator column is positioned such that the aqueous phase always enters below the extracting solvent. After the aqueous phase is collected, the collecting vessel is stoppered and the quantity of aqueous phase is determined by weighing. The solvent and the aqueous phase are equilibrated by slowly rotating the collecting vessel. A small amount of the extracting solvent is then removed and injected into a GC equipped with an appropriate detector. The solute concentration in the aqueous phase is determined from a calibration curve constructed using known concentrations of the solute. The extraction efficiency of the solvent shall be determined in a separate set of experiments.

(A) *Determination of calibration curve.* (*1*) Prepare solute standard solutions of concentrations covering the expected range of the solute solubility. Select a column and optimum GC operating conditions for resolution between the solute and solvent and the solute and extracting solvent. Inject a known volume of each standard solution into the injection port of the GC. For each standard solution determine the average of the ratio R of peak area to volume (in µL) for the chromatographic peak of interest from at least three separate injections.

(*2*) After running all the standard solutions, determine the coefficients, a and b, using linear regression analysis on the equation of concentration (C) vs. R in the form:

Equation 5:

$$C = aR + b$$

(B) *Loading of the generator column.* The generator column is packed and loaded with solute in the same manner as for the HPLC method in paragraph (c)(3)(iii) of this section. As shown in figure 2 in paragraph (c)(1)(i)(A)(*2*)(*ii*) of this section, attach approximately 20 cm of straight stainless steel tubing to the bottom of the generator column. Connect the top of the generator column to a water reservoir in figure 4 in paragraph (c)(3)(iii)(C)(*4*)(*i*) of this section using teflon tubing. Use air or nitrogen pressure (5 PSI) from an air or nitrogen cylinder to force water from the reservoir through the column. Collect water in an Erlenmeyer flask for approximately 15 min while the solute concentration in water equilibrates; longer time may be required for less soluble compounds.

(C) *Collection and extraction of the solute.* During the equilibration time, add a known weight of extracting solvent to a collection vessel which can be capped. The extracting solvent should

cover the bottom of the collection vessel to a depth sufficient to submerge the collecting tube but still maintain 100:1 water/solvent ratio. Record the weight (to the nearest mg) of a collection vessel with cap and extracting solvent. Place the collection vessel under the generator column so that water from the collecting tube enters below the level of the extracting solvent in figure 2 in paragraph (c)(1)(i)(A)(*2*)(*ii*) of this section. When the collection vessel is filled, remove it from under the generator column, replace cap, and weigh the filled vessel. Determine the weight of water collected. Before analyzing for the solute, gently rotate the collection vessel contents for approximately 30 min, controlling the rate of rotation so as not to form an emulsion; rotating the flask end over end five times per minute is sufficient. The extraction efficiency of the solvent shall be determined in a separate set of experiments.

(D) *Analysis of the solute.* (*1*) After rotating, allow the collection vessel to stand for approximately 30 min; then remove a known volume of the extracting solvent from the vessel using a microliter syringe and inject it into the GC. Record the ratio of peak area to volume injected and, from the regression equation of the calibration line, determine the concentration of solute in the extracting solvent. If the extraction efficiency is not 100%, the measured extraction efficiency shall be used to obtain the correct concentration of solute extracted. In this equation, C_{es} is the molar concentration of solute in extracting solvent, d_{H_2O} and d_{es} are the densities in grams per milliliter of water and extracting solvent, respectively, and g_{es} and g_{H_2O} are the grams of extracting solvent and water, respectively, contained in the collection vessels. The molar concentration of solute in water C(M) is determined from the following equation:

Equation 6:

$$C(M) = (C_{es})\left[d_{H_2O}/d_{es}\right]\left[g_{es}/g_{H_2O}\right]$$

(*2*) Make replicate injections from each collecting vessel to determine the average solute concentration in water for each vessel. To make sure the generator column has reached equilibrium, run at least two additional (for a total of three) collection vessels and analyze the extracted solute as described in paragraph (c)(3)(iv)(D)(*1*) of this section. Calculate C(M) from the average solute concentration in the three vessels.

(*3*) If another analytical method is used in place of the GC, then Procedure B, as described in paragraph (c)(3)(iv) of this section, shall be modified and the new analytical procedure shall be used to determine quantitatively the amount of solute extracted in the extraction solvent.

(v) *Analysis of reference compounds.* Prior to analyzing the test solution, make duplicate runs on at least two of the reference compounds listed in table 1 in paragraph (b)(4)(ii) of this section. When using the reference compounds, follow the same procedure previously described for preparing the test solution and running the test. If the average value obtained for each compound is within 0.1 log unit of the reference value, then the test procedure and HPLC system are functioning properly; if not a thorough checking over of the HPLC and careful adherence to the test procedures should be done to correct the discrepancy.

(vi) *Modification of procedures for potential problems—Decomposition of the test compound.* If the test compound decomposes in one or more of the aqueous solvents required during the period of the test at a rate such that an accurate value for water solubility cannot be obtained, then it will be necessary to carry out detailed transformation studies, such as hydrolysis studies. If decomposition is due to aqueous photolysis, then it will be necessary to carry out the studies in the dark, under red or yellow lights, or by any other suitable method to eliminate this transformation process.

(d) *Data and reporting*—(1) *Test report.* (i) For the test solution, report the weights to the nearest 0.1 mg of the test substance and *n*-octanol. Also report the weight percent and molar concentration of the test substance in the *n*-octanol; the density of *n*-octanol at 25 °C is 0.827 grams per milliliter (gm)/mL.

(ii) For each run provide the molar concentration of the test substance in

water for each of three determinations, the mean value, and the standard deviation.

(iii) For each of the three determinations calculate the K_{ow} as the ratio of the molar concentration of the test substance in *n*-octanol to the molar concentration in water. Also calculate and report the mean K_{ow} and its standard deviation. Values of K_{ow} shall be reported as their logarithms ($\log_{10}K_{ow}$).

(iv) Report the temperature (±0.05 °C) at which the generator column was controlled during the test.

(v) For each reference compound report the individual values of $\log_{10}K_{ow}$ and the average of the two runs.

(vi) For compounds that decompose at a rate such that a precise value for the solubility cannot be obtained, provide a statement to that effect.

(2) *Specific analytical, calibration, and recovery procedures.* (i) For the HPLC method describe and/or report:

(A) The method used to determine the sample-loop volume and the average and standard deviation of that volume.

(B) The average and standard deviation of the RF.

(C) The extraction solvent and the extraction efficiency used.

(D) Any changes made or problems encountered in the test procedures.

(ii) For the GC method report:

(A) The column and GC operating conditions of temperature and flow rate.

(B) The average and standard deviation of the average area per microliter obtained for each of the standard solutions.

(C) The form of the regression equation obtained in the calibration procedure.

(D) The extracting solvent and extraction efficiency used.

(E) The average and standard deviation of solute concentration in each collection vessel.

(F) Any changes made or problems encountered in the test procedure.

(iii) If another approved analytical method is used to determine the concentration of the test chemical in water, then all the important test conditions shall be reported.

(iv) If the concentration of the test substance in *n*-octanol is determined by an independent analytical method such as GC, provide a complete description of the method.

(e) *References.* For additional background information on this test guideline, the following references should be consulted. These references are available from the TSCA Nonconfidential Information Center, Rm. NE-B607, Environmental Protection Agency, 401 M St., SW., Washington, DC, 12 noon to 4 p.m., Monday through Friday, excluding legal holidays.

(1) Banerjee, S. et al., Water solubility and octanol/water partition coefficient of organics. Limitation of the solubility-partition coefficient correlation. *Environmental Science and Technology* 14:1227–1229 (1980).

(2) Bruggemann W.A. et al., Reversed-phase thin-layer chromatography of polynuclear aromatic hydrocarbons and chlorinated biphenyls. Relationship with hydrophobicity as measured by aqueous solubility and octanol/water partition coefficient. *Journal of Chromatography* 238: 335–346 (1982).

(3) Chiou, C.T. et al. Partition coefficient and bioaccumulation of selected organic chemicals. *Environmental Science and Technology* 11:475–478 (1977).

(4) Chiou, C.T. and Schmedding, D.W., Partitioning of organic compounds in octanol/water systems. *Environmental Science and Technology* 16:4–10 (1982).

(5) Chiou, C.T et al., Partition equilibria of nonionic organic compounds between soil, organic matter, and water. *Environmental Science and Technology* 17:227–231 (1983).

(6) DeVoe, H. et al. ''Generator Columns and High Pressure Liquid Chromatography for Determining Aqueous Solubilities and Octanol-Water Partition Coefficients of Hydrophobic Substances,'' *Journal of Research of the National Bureau of Standards,* 86:361–366 (1981).

(7) Fujita, T. et al. ''A New Substituent Constant, Derived from Partition Coefficients.'' *Journal of the American Chemical Society,* 86:5175 (1964).

(8) Hansch, C. and Leo, A. 1985 MEDCHEM Project, version 26. Pomona College, Claremont, CA. USA.

(9) Hansch, C. and Leo, A. Medchem Software Manual. CLOGP3 Users Guide. Release 3.32. December 1984. Medicinal Chemistry Project, Pomona College, Claremont, CA.

(10) Hawker, D.W. and Connell, D.W. Octanol-water partition coefficients of polychlorinated biphenyl congeners. *Environmental Science and Technology* 22:382–387 (1988).

(11) May, W.E. et al. ''Determination of the aqueous solubility of polynuclear aromatic hydrocarbons by a coupled column liquid chromatographic technique,'' *Analytical Chemistry,* 50:175–179 (1978).

(12) May, W.E. et al. ''Determination of the Solubility Behavior of Some Polycyclic Aromatic Hydrocarbons in Water,'' *Analytical Chemistry* 50:997–1000 (1978).

(13) Miller, M.M. et al. Aqueous solubilities, octanol/water partition coefficients and entropies of melting of chlorinated benzenes and biphenyls. *Journal of Chemical and Engineering Data* 29:184–190 (1984).

(14) Neely, W.B. et al. Partition Coefficient to Measure Bioconcentration Potential of Organic Chemicals in Fish, *Environmental Science Technology,* 8:113–115 (1974).

(15) Rappaport, R.A. and Eisenrich, S.J. Chromatographic determination of octanol-water partition coefficients (K_{ow}'s) for 58 polychlorinated biphenyl congeners. *Environmental Science and Technology* 18:163–170 (1984).

(16) Tewari, Y.B. et al. Aqueous solubility and octanol/water partition coefficients of organic compounds at 25 °C. *Journal of Chemical and Engineering Data* 27:451–454 (1982).

(17) Tulp, M.T.M. and Hutzinger, O. Some thoughts on aqueous solubilities and partition coefficients of PCB, and the mathematical correlation between bioaccumulation and physio-chemical properties. *Chemosphere* 10:849–860 (1978).

(18) Veith, G.D. et al. A rapid method for estimating $\log_{10}$ P for organic chemicals, *Water Research* 13:43–47 (1979).

(19) Wasik, S.P. et al. Octanol/water partition coefficient and aqueous solubilities of organic compounds, Report NBSIR 81–2406 (1981). National Bureau of Standards, U.S. Department of Commerce, Washington, DC.

(20) Woodburn, K.B. Measurement and application of the octanol/water partition coefficients for selected polychlorinated biphenyls. Master's Thesis (1982), University of Wisconsin at Madison, Madison, WI.

(21) Woodburn, K.B. et al. Generator column determination of octanol/water partition coefficients for selected polychlorinated biphenyl congeners. *Environmental Science and Technology* 18:457–459 (1984).

(22) ASTM D 1193–91 (Approved Sep 15, 1991), ''Standard Specification for Reagent Water.'' American Society for Testing and Materials (ASTM), 1916 Race St., Philadelphia, PA 19103.

§ 799.6784 TSCA water solubility: Column elution method; shake flask method.

(a) *Scope*—(1) *Applicability.* This section is intended to meet the testing requirements of the Toxic Substances Control Act (TSCA) (15 U.S.C. 2601).

(2) *Source.* The source material used in developing this TSCA test guideline is the Office of Pollution Prevention, Pesticides and Toxics (OPPTS) harmonized test guideline 830.7840 (March 1998, revised final guideline). This source is available at the address in paragraph (f) of this section.

(b) *Introductory information*—(1) *Prerequisites.* Suitable analytical method, structural formula, vapor pressure curve, dissociation constant, and hydrolysis independence of pH (preliminary test).

(2) *Coefficient of variation.* The coefficient of variation on the mean values reported by the participants of the Organization for Economic Cooperation and Development (OECD) Laboratory Intercomparison Testing, Part I, 1979, appeared to be dependent on the chemicals tested and the test temperatures; it ranges from 0.05 to 0.34 for the column elution method, and from 0.03 to 1.12 for the flask method.

(3) *Qualifying statements.* (i) The method is not applicable to volatile substances. Care should be taken that the substances examined are as pure as possible and stable in water. It must be ascertained that the identity of the

substance is not changed during the procedure.

(ii) The column elution method is not suitable for volatile substances. The carrier material used here may not yet be optimal. This method is intended for material with solubilities below approximately 10^{-2} gram/Liter (g/L).

(iii) The flask method is intended for materials with solubility above 10^{-2} g/L. It is not applicable to volatile substances; this method may pose difficulties in the case of surface-active materials.

(c) *Method*—(1) *Introduction, purpose, scope, relevance, application, and limits of test.* (i) A solution is a homogeneous mixture of different substances in a solvent. The particle sizes of the dispersed substances are of the same magnitude as molecules and ions; therefore, the smallest volumes which can be obtained from a solution are always of uniform composition.

(ii) Solubility in water is a significant parameter because:

(A) The spatial and temporal movement (mobility) of a substance is largely determined by its solubility in water.

(B) Water soluble substances gain ready access to humans and other living organisms.

(C) The knowledge of the solubility in water is a prerequisite for testing biological degradation and bioaccumulation in water and for other tests.

(iii) No single method is available to cover the whole range of solubilities in water, from relatively soluble to very low-soluble chemicals. A general test guideline for the determination of the solubility in water must include methods which cover the whole range of water soluble substances. Therefore, this section includes two methods:

(A) One which applies to substances with low solubilities ($<10^{-2}$ g/L), referred to as the ''column elution method.''

(B) The other which applies to substances with higher solubilities ($\leq 10^{-2}$ g/L), referred to as the ''flask method.''

(2) *Definition.* The solubility in water of a substance is specified by the saturation mass concentration of the substance in water and is a function of temperature. The solubility in water is specified in units of weight per volume of solution. The SI-unit is killogram/meter $(kg/m)^3$; g/L may also be used.

(3) *Reference substances.* The reference substances need not be employed in all cases when investigating a new substance. They are provided primarily so that calibration of the method may be performed from time to time and to offer the chance to compare the results when another method is applied. The values presented in table 1 of this section are not necessarily representative of the results which can be obtained with this test method as they have been derived from an earlier version of the test method.

TABLE 1—DATA FOR REFERENCE SUBSTANCES

Method	T, °C	Mean (milligram (mg)/L)	Range (mg/L)	No. of labs
Fluoranthene				
Elution method	15	0.275	0.104 to 0.920	6
	25	0.373	0.198 to 1.050	7
Hexachlorobenzene				
Elution method	15	9.21×10^{-3}	2.06×10^{-3} to 2.16×10^{-2}	6
	25	9.96×10^{-3}	1.19×10^{-3} to 2.31×10^{-2}	7
γ-Hexachlorocyclohexane				
Elution method	15	6.50	4.43 to 10.5	6
	25	9.20	6.64 to 14.5	7
2,4-Dichlorophenoxyacetic acid				
Flask method	15	0.633	0.380 to 0.764	5
	25	0.812	0.655 to 0.927	5
Mercury(II) chloride:				
Flask method	15	53.0	47.7 to 56.5	4
	25	66.4	58.3 to 70.4	4
4-Nitrophenol:				
Flask method	15	9.95	8.88 to 10.9	6
	25	14.8	13.8 to 15.9	6

(4) *Principle of the test methods.* The approximate amount of the sample and the time necessary to achieve the saturation mass concentration should be determined in a simple preliminary test.

(i) *Column elution method.* This method is based on the elution of a test substance with water from a microcolumn which is charged with an inert carrier material such as glass beads, silica gel, or sand, and an excess of test substance. The water solubility is determined when the mass concentration of the eluate is constant. This is shown by a concentration plateau as a function of time in the following figure 1:

FIGURE 1—CONCENTRATION VERSUS TIME OF SUBSTANCE IN THE ELUATE

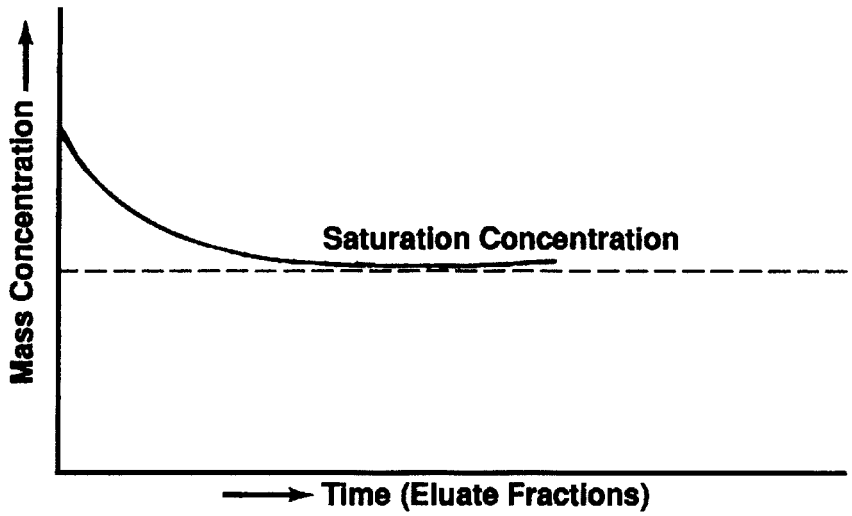

(ii) *Flask method.* In this method, the substance (solids must be pulverized) is dissolved in water at a temperature somewhat above the test temperature. When saturation is achieved, the mixture is cooled and kept at the test temperature, stirring as long as necessary to reach equilibrium. Such a procedure is described in the reference listed in paragraph (f)(2) of this section. Subsequently, the mass concentration of the substance in the aqueous solution, which must not contain any undissolved particles, is determined by a suitable analytical method.

(5) *Quality criteria*—(i) *Repeatability.* For the column elution method <30% is acceptable; for the flask method <15% should be observed.

(ii) *Sensitivity.* This depends upon the method of analysis, but mass concentration determinations down to at least 10^{-6} g/L can be determined.

(iii) *Specificity.* These methods should only be applied to:

(A) Pure substance.

(B) Substances that are stable in water.

(C) Slightly soluble substances, i.e. $<10^{-2}$ g/L for the column elution method.

(D) Organic substances for the column elution method.

(iv) *Possibility of standardization.* These methods can be standardized.

(d) *Description of the test procedures*—(1) *Preparations*—(i) *Apparatus*—(A) *Column elution method.* (*1*) The schematic arrangement of the system is presented in the following figure 2:

FIGURE 2—SCHEMATIC TEST ARRANGEMENT

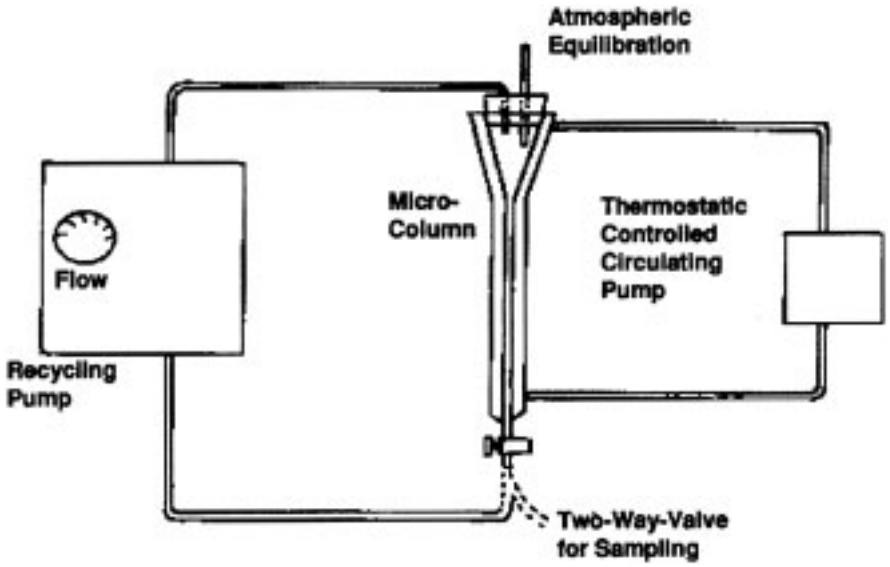

(*2*) Although any size is acceptable, provided it meets the criteria for reproducibility and sensitivity. The column should provide for a head space of at least five bed-volumes of water and a minimum of five samples. Alternatively, the size can be reduced if make-up solvent is employed to replace the initial five bed-volumes removed with impurities. A suitable micro-column is shown in the following figure 3:

FIGURE 3—MICROCOLUMN (ALL DIMENSIONS IN MILLIMETERS)

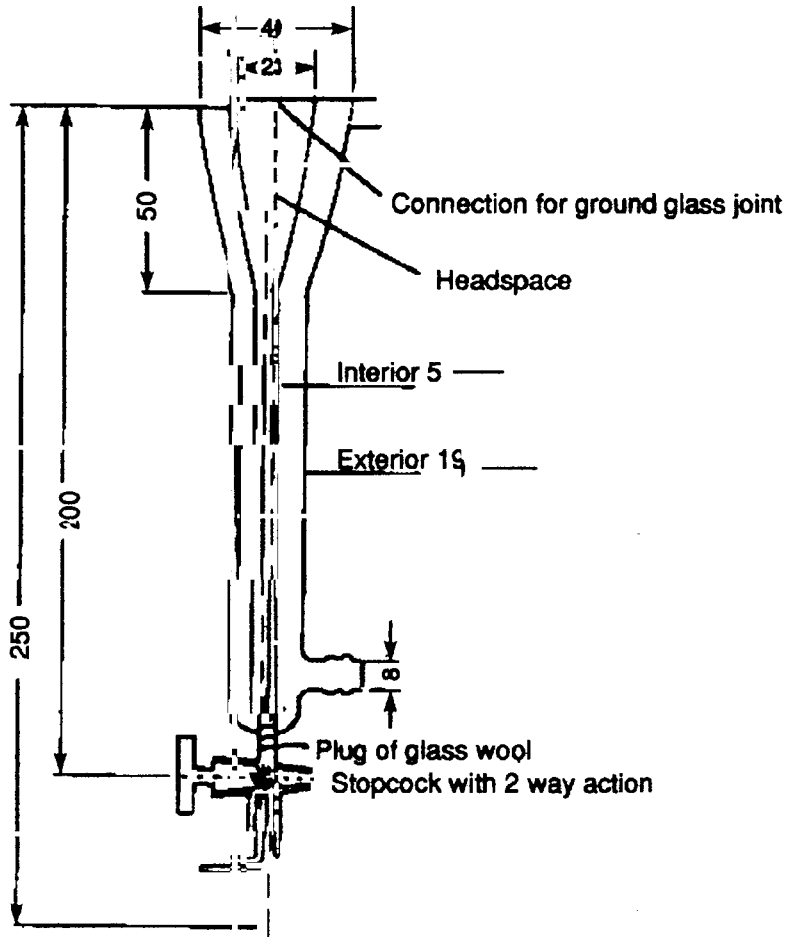

(*3*) The column should be connected to a recycling pump capable of controlling flows of approximately 25 mL/hours (h). The pump is connected with polytetrafluoroethylene and/or glass connections. The column and pump, when assembled, should have provision for sampling the effluent and equilibrating the head space at atmospheric pressure. The column material is supported with a small (5 millimeter (mm)) plug of glass wool, which must also serve to filter particles.

(B) *Flask method.* For the flask method, the following material is needed:

(*1*) Normal laboratory glassware and instrumentation.

(*2*) A device suitable for the agitation of solutions under controlled constant temperatures.

(*3*) A centrifuge (preferably thermostatted), if required with emulsions.

(*4*) Equipment for analytical determinations.

(2) *Reagents.* The substance to be tested should be as pure as possible, particularly in the flask method where purification is not provided. The carrier material for the column elution

method should be inert. Possible materials which can be employed are glass beads and silica. A suitable volatile solvent of analytical reaction quality should be used to apply the test substance to the carrier material. Double distilled water from glass or quartz apparatus should be employed as the eluent or solvent. Water directly from an ion exchanger must not be used.

(3) *Test conditions.* The test is preferably run at 20±0.5 °C (293 °K). If temperature dependence is suspected in the solubility (≤ 3%/ °C), two other temperatures should also be used—both differing from each other and the initially chosen temperature by 10 °C. In this case the temperature control should be ±0.1 °C. One of these additional temperatures should be below the initial temperature. The chosen temperature(s) should be kept constant in all parts of the equipment (including the leveling vessel).

(4) *Performance of the tests*—(i) *Preliminary test.* (A) To approximately 0.1 g of the sample (solid substances must be pulverized) in a glass-stoppered 10 milliliter (mL) graduated cylinder, increasing volumes of distilled water at room temperature are added according to the steps shown in Table 2 of this section:

TABLE 2—DETERMINATION OF SOLUBILITY

Solubility data	step 1	step 2	step 3	step 4	step 5	step 6	step 7
Total volume H_2O added (mL)	0.1	0.5	1	2	10	100	≤100
Approximate solubility (g/L)	≤1,000	200	100	50	10	1	<1

(B) After each addition of water to give the indicated total volume, the mixture is shaken vigorously for 10 min and is visually checked for any undissolved parts of the sample. If, after a total of 10 mL of water has been added (step 5), the sample or parts of it remain undissolved, the contents of the measuring cylinder is transferred to a 100 mL measuring cylinder which is then filled up with water to 100 mL (step 6) and shaken. At lower solubilities the time required to dissolve a substance can be considerably long (24 h should be allowed). The approximate solubility is given in the table under that volume of added water in which complete dissolution of the sample occurs. If the substance is still apparently insoluble, further dilution should be undertaken to ascertain whether the column elution or flask solubility method should be used.

(ii) *Column elution*—(A) *Apparatus.* (*1*) The equipment is arranged as shown in figures 2 and 3 in paragraphs (d)(1)(i)(A)(*1*) and (d)(1)(i)(A)(*2*) of this section. Approximately 600 milligrams (mg) of carrier material is weighed and transferred to a 50 mL round-bottom flask. A suitable, weighed amount of test substance is dissolved in the chosen solvent, and an appropriate amount of the test substance solution is added to the carrier material. The solvent must be completely evaporated, e.g. in a rotary evaporator; otherwise water saturation of the carrier is not achieved due to partition effects on the surface of the carrier.

(*2*) The loading of carrier material may cause problems (erroneous results) if the test substance is deposited as an oil or a different crystal phase. The problem should be examined experimentally.

(*3*) The loaded carrier material is allowed to soak for about 2 h in approximately 5 mL of water, and then the suspension is added to the microcolumn. Alternatively, dry loaded carrier material may be poured in the microcolumn, which has been filled with water and then equilibrated for approximately 2 h.

(B) *Test procedure.* The elution of the substance from the carrier material can be carried out in two different ways: Leveling vessel or circulating pump. The two principles should be used alternatively.

(*1*) Leveling vessel, see figure 3 in paragraph (d)(1)(i)(A)(*2*) and figure 4 in paragraph (d)(4)(iii) of this section.

(*i*) The connection to the leveling vessel is made by using a ground glass joint which is connected by teflon tubing. It is recommended that a flow rate

of approximately 25 mL/h be used. Successive eluate fractions should be collected and analyzed by the chosen method.

(*ii*) Fractions from the middle eluate range where the concentrations are constant (±30%) in at least five consecutive fractions are used to determine the solubility in water.

(*iii*) A second run is to be performed at half the flow rate of the first. If the results of the two runs are in agreement, the test is satisfactory; if there is a higher apparent solubility with the lower flow rate, then the halving of the flow rate must continue until two successive runs give the same solubility.

(*2*) Circulating pump, see figures 2 and 3 in paragraphs (d)(1)(i)(A)(*1*) and (d)(1)(i)(A)(*2*) of this section.

(*i*) With this apparatus, the microcolumn must be modified. A stopcock with 2–way action must be used, see figure 3 in paragraph (d)(1)(i)(A)(*2*) of this section). The circulating pump can be, e.g. a peristaltic pump (be careful that no contamination and/or adsorption occurs with the tube material) or a membrane pump.

(*ii*) The flow through the column is started. It is recommended that a flow rate of approximately 25 mL/h be used (approximately 10 bed volumes per h for the described column). The first five-bed volumes (minimum) are discarded to remove water soluble impurities.

(*iii*) Following this, the recycling pump is connected and the apparatus allowed to run until equilibration is established, as defined by five successive samples whose concentrations do not differ by more than 30% in a random fashion (see paragraph (f)(2) of this section). These samples should be separated from each other by time intervals corresponding to the passage of at least 10 bed-volumes of the eluent.

(*3*) In both cases (using a circulation pump or a leveling vessel) the fractions should be checked for the presence of colloidal matter by examination for the Tyndall effect (light scattering). Presence of such particles invalidates the results, and the test should be repeated with improvements in the filtering action of the column. The pH of each sample should be recorded. A second run should be performed at the same temperature.

(iii) *Flask method: Test procedure.* The quantity of material necessary to saturate the desired volume of water is estimated from the preliminary test. The volume of water required will depend on the analytical method and the solubility range. About five times the quantity of material determined in paragraph (d)(4)(i)(A) of this section is weighed into each of three glass vessels fitted with glass stoppers (e.g. centrifuge tubes, flasks). The chosen volume of water is added to each vessel, and the vessels are tightly stoppered. The closed vessels are then agitated at 30 °C. (A shaking or stirring device capable of operating at constant temperature should be used, *e.g.* magnetic stirring in a thermostatically controlled water bath.) After 1 day, one of the vessels is removed and re-equilibrated for 24 h at the test temperature with occasional shaking. The contents of the vessel are then centrifuged at the test temperature, and the concentration of compound in the clear aqueous phase is determined by a suitable analytical method. The other two flasks are treated similarly after initial equilibration at 30 °C for 2 and 3 days, respectively. If the concentration results from at least the last two vessels agree with the required reproducibility, the test is satisfactory. The whole test should be repeated, using longer equilibration times if the results from vessels one, two, and three show a tendency to increasing values. The arrangement of the apparatus is shown in the following figure 4:

FIGURE 4—TEST ARRANGEMENT FOR THE DETERMINATION OF SOLUBILITY IN WATER OF SLIGHTLY SOLUBLE, LOW VOLATILITY ORGANIC SUBSTANCES

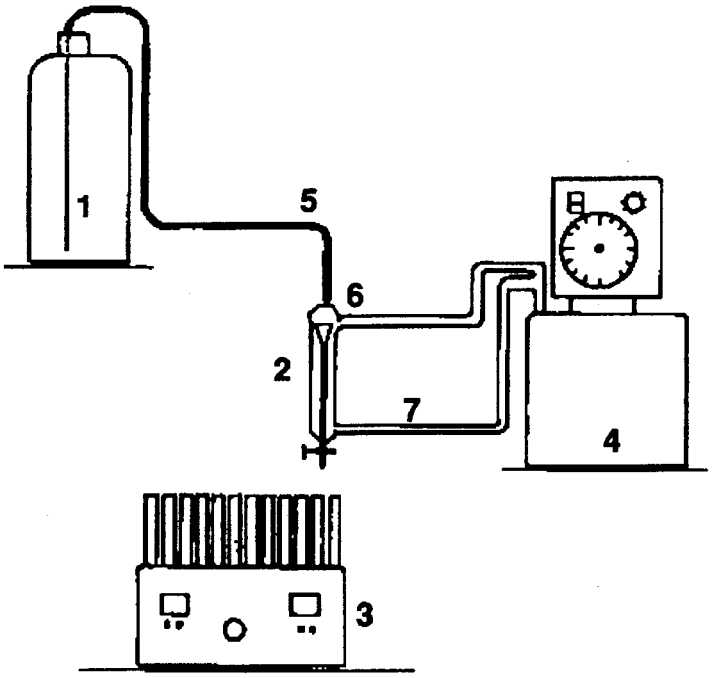

1 = Leveling vessel (e.g. 2.5 L chemical flask)

2 = Column (see figure 3 in paragraph (d)(1)(i)(A)(*2*) of this section)

3 = Fraction accumulator

4 = Thermostat

5 = Teflon tubing

6 = Glass stopper

7 = Water line (between thermostat and column, inner diameter: approximately 8 mm)

(iv) *Analysis.* A substance-specific analytical method is required for these determinations, since small amounts of soluble impurities can cause large errors in the measured solubility. Examples of such methods are gas or liquid chromatography, titration methods, photometric methods, and polarographic methods.

(e) *Data and reporting*—(1) *Column elution method*—(i) *Treatment of results.* The mean value from at least five consecutive samples taken from the saturation plateau (figure 1 in paragraph (c)(4)(i) of this section) should be determined for each run, as should the standard deviation. A comparison should be made between the two means to ensure that they agree with a repeatability of less than 30%.

(ii) *Test report.* The report should contain an indication of the results of the preliminary test plus the following information:

(A) The individual concentrations, flow rates and pHs of each samples.

(B) The means and standard deviations from at least five samples from the saturation plateau of each run.

(C) The average of the two successive, acceptable runs.

(D) The temperature of the runs.

(E) The method of analysis employed.

(F) The nature of the carrier material employed.

(G) Loading of carrier material.

(H) Solvent used.

(I) Statement that the identity of the substance in the saturated solution has been proved.

(2) *Flask method*—(i) *Treatment of results.* The individual results should be given for each of the three flasks and those results deemed to be constant (repeatability <15%) should be averaged and given in units of mass per volume of solution. This may require the conversion of mass units to volume units, using the density when the solubility is very high (100 g/L).

(ii) *Test report.* The report should include the following information:

(A) The individual analytical determinations and the average where more than one value was determined for each flask.

(B) The average of the value for the different flasks which were in agreement.

(C) The test temperature.

(D) The analytical method employed.

(f) *References.* For additional information on this test guideline, the following references should be consulted. These references are available from the TSCA Nonconfidential Information Center, Rm. NE-B607, Environmental Protection Agency, 401 M St., SW., Washington, DC, 12 noon to 4 p.m., Monday through Friday, excluding legal holidays.

(1) Veith, G.D. and V.M. Comstock. Apparatus for continuously saturating water with hydrophobic organic chemicals. *Journal of the Fishing Research Board of Canada* 32:1849–1851 (1975).

(2) *Organization for Economic Cooperation and Development,* Guidelines for The Testing of Chemicals, OECD 105, Water Solubility (Column Elution Method—Shake Flask Method), OECD, Paris, France (1981).

§ 799.6786 TSCA water solubility: Generator column method.

(a) *Scope*—(1) *Applicability.* This section is intended to meet the testing requirements of the Toxic Substances Control Act (TSCA) (15 U.S.C. 2601).

(2) *Source.* The source material used in developing this TSCA test guideline is the Office of Pollution Prevention, Pesticides and Toxics (OPPTS) harmonized test guideline 830.7860 (March 1998, revised final guideline). The source is available at the address in paragraph (e) of this section.

(b) *Introduction*—(1) *Purpose.* (i) The water solubility of a chemical is defined as the equilibrium concentration of the chemical in a saturated aqueous solution at a given temperature and pressure. The aqueous phase solubility is an important factor in governing the movement, distribution, and rate of degradation of chemicals in the environment. Substances that are relatively water soluble are more likely to be widely distributed by the hydrologic cycle than those which are relatively insoluble. Furthermore, substances with higher water solubility are more likely to undergo microbial or chemical degradation in the environment because dissolution makes them ''available'' to interact and, therefore, react with other chemicals and microorganisms. Both the extent and rate of degradation via hydrolysis, photolysis, oxidation, reduction, and biodegradation depend on a chemical being soluble in water (i.e., homogeneous kinetics).

(ii) Water provides the medium in which many organisms live, and water is a major component of the internal environment of all living organisms (except for dormant stages of certain life forms). Even organisms which are adapted to life in a gaseous environment require water for normal functioning. Water is thus the medium through which most other chemicals are transported to and into living cells. As a result, the extent to which chemicals dissolve in water will be a major determinant for movement through the environment and entry into living systems.

(iii) The water solubility of a chemical also has an effect on its sorption into and desorption from soils and sediments, and on volatilization from aqueous media. The more soluble a chemical substance is, the less likely it is to sorb to soils and sediments and the less likely it is to volatilize from water. Finally, the design of most chemical tests and many ecological and health tests requires precise knowledge of the water solubility of the chemical to be tested.

(2) *Definitions.* The following definitions apply to this section.

Concentration (C) of a solution is the amount of solute in a given amount of solvent or solution and can be expressed as a weight/weight or weight/volume relationship. The conversion from a weight relationship to one of volume incorporates density as a factor. For dilute aqueous solutions, the density of the solvent is approximately equal to the density of the solution; thus, concentrations expressed in milligrams per liter (mg/L) are approximately equal to 10^{-3} g/10^3 g or parts per million (ppm); those expressed in micrograms per liter (μg/L) are approximately equal to 10^{-6} g/10^3 g or parts per billion (ppb). In addition, concentration can be expressed in terms of molarity, normality, molality, and mole fraction. For example, to convert from weight/volume to molarity molecular mass is incorporated as a factor.

Density is the mass of a unit volume of a material. It is a function of temperature, hence the temperature at which it is measured should be specified. For a solid, it is the density of the impermeable portion rather than the bulk density. For solids and liquids, suitable units of measurement are grams per cubic centimeter (g/cm^3). The density of a solution is the mass of a unit volume of the solution and suitable units of measurement are g/cm^3.

Extractor column is used to extract the solute from the saturated solutions produced by the generator column. After extraction onto a chromatographic support, the solute is eluted with a solvent/water mixture and subsequently analyzed by high-pressure liquid chromatography (HPLC), gas chromatography (GC), or any other suitable analytical procedure. A detailed description of the preparation of the extractor column is given in paragraph (c)(1)(i)(D) of this section.

Generator column is used to produce or generate saturated solutions of a solute in a solvent. The column, see figure 1 in paragraph (c)(1)(i)(A) of this section, is packed with a solid support coated with the solute, i.e., the organic compound whose solubility is to be determined. When water (the solvent) is pumped through the column, saturated solutions of the solute are generated. Preparation of the generator column is described in paragraph (c)(1)(i)(A) of this section.

Response factor (RF) is the solute concentration required to give a 1 unit area chromatographic peak or 1 unit output from the HPLC recording integrator at a particular recorder attenuation. The factor is required to convert from units of area to units of concentration. The determination of the RF is given in paragraph (c)(3)(ii)(B)(*2*) of this section.

Sample loop is a 1/16 inch (in) outer diameter (O.D.) (1.6 millimeter (mm)) stainless steel tube with an internal volume between 20 and 50 μL. The loop is attached to the sample injection valve of the HPLC and is used to inject standard solutions into the mobile phase of the HPLC when determining the RF for the recording integrator. The exact volume of the loop must be determined as described in paragraph (c)(3)(ii)(B)(*1*) of this section when the HPLC method is used.

Saturated solution is a solution in which the dissolved solute is in equilibrium with an excess of undissolved solute; or a solution in equilibrium such that at a fixed temperature and pressure, the concentration of the solute in the solution is at its maximum value and will not change even in the presence of an excess of solute.

Solution is a homogeneous mixture of two or more substances constituting a single phase.

(3) *Principle of the test method.* (i) This test method is based on the dynamic coupled column liquid chromatographic (DCCLC) technique for determining the aqueous solubility of organic compounds that was initially developed by May et al. (as described in the references listed in paragraphs (e)(5) and (e)(6) of this section), modified by DeVoe et al. (as described in the reference listed in paragraph (e)(1) of this section), and finalized by Wasik et al. (as described in the reference listed in paragraph (e)(11) of this section). The DCCLC technique utilizes a generator column, extractor column and HPLC coupled or interconnected to provide a continuous closed flow system. Saturated aqueous solutions of the test compound are produced by pumping water through the generator column that is packed with a

solid support coated with the compound. The compound is extracted from the saturated solution onto an extractor column, then eluted from the extractor column with a solvent/water mixture and subsequently analyzed by HPLC using a variable wavelength ultraviolet (UV) detector operating at a suitable wavelength. Chromatogram peaks are recorded and integrated using a recording integrator. The concentration of the compound in the effluent from the generator column, i.e., the water solubility of the compound, is determined from the mass of the compound (solute) extracted from a measured volume of water (solvent).

(ii) Since the HPLC method is only applicable to compounds that absorb in the UV, an alternate GC method, or any other reliable procedure (which must be approved by OPPTS), can be used for those compounds that do not absorb in the UV. In the GC method the saturated solutions produced in the generator column are extracted using an appropriate organic solvent that is subsequently injected into the GC, or any other suitable analytical device, for analysis of the test compound.

(4) *Reference chemicals.* Table 1 of this section lists the water solubilities at 25 °C for a number of reference chemicals as obtained from the scientific literature. The data from Wasik et al. (as described in the reference listed in paragraph (e)(11) of this section), Miller et al. and Tewari et al. (as described in the references listed in paragraphs (e)(7) and (e)(10) of this section, respectively) were obtained from the generator column method. The water solubilities data were also obtained from Mackay et al. and Yalkowski et al. (as described in the references listed in paragraphs (e)(4) and (e)(12) of this section, respectively) and other scientists by the conventional shake flask method. These data have been provided primarily so that the generator column method can be calibrated from time to time and to allow the chemical testing laboratory an opportunity to compare its results with those listed in table 1 of this section. The water solubility values at 25 °C reported by Yalkowski et al. are their preferred values and, in general, represent the best available water solubility data at 25 °C. The testing laboratory has the option of choosing its own reference chemicals, but references must be given to establish the validity of the measured values of the water solubility.

TABLE 1—WATER SOLUBILITIES AT 25 °C OF SOME REFERENCE CHEMICALS

Reference chemical	Water solubility (ppm at 25 °C)		
	Wasik (generator column method)	Yalkowski[1 5]	Other literature references
2-Heptanone	[2]4080	4300	[5]4330
1-Chlorobutane	[2]873	872.9	[7]666
Ethylbenzene	[2]187	208	[7]162
1,2,3-Trimethylbenzene	[2]65.5	75.2	[7]48.2
Biphenyl	[3 10]6.71	7.48	[8]6.62
Phenanthrene	[4]1.002	1.212	—
2,4,6-Trichlorobiphenyl	[3 10]0.226	0.225	[8]0.119
2,3,4,5-Tetrachlorobiphenyl	[3 10]0.0209	0.01396	[8]0.0192
Hexachlorobenzene	—	0.004669	[9]0.00996
2,3,4,5,6-Pentachlorobiphenyl	[3 10]0.00548	0.004016	[8]0.0068

[1] Preferred water solubility at 25 °C by Yalkowski et al. (1990) in paragraph (e)(12) of this section based on a critical review of all the experimental water solubility data published.
[2] Tewari et al. (1982) in paragraph (e)(10) of this section.
[3] Leifer et al. (1983) in paragraph (e)(3) of this section.
[4] May, Wasik, and Freeman (1978, 1978a) in paragraphs (e)(5) and (6) of this section.
[5] Yalkowski et al. (1990) in paragraph (e)(12) of this section.
[6] Hansch et al. (1968) in paragraph (e)(2) of this section.
[7] Sutton and Calder (1975) in paragraph (e)(9) of this section.
[8] Mackay et al. (1980) in paragraph (e)(4) of this section.
[9] The elution chromatographic method from Organization for Economic Cooperation and Development (OECD) (1981) in paragraph (e)(8) of this section.
[10] Miller et al. (1984) in paragraph (e)(7) of this section.

(5) *Applicability and specificity*. (i) Procedures are described in this section to determine the water solubility for liquid or solid compounds. The water solubility can be determined in very pure water, buffer solution for compounds that reversibly ionize or protonate, or in artificial seawater as a function of temperature (i.e., in the range of temperatures of environmental concern). This section is not applicable to the water solubility of gases.

(ii) This section is designed to determine the water solubility of a solid or liquid test chemical in the range of 1 ppb to 5,000 ppm. For chemicals whose solubility is below 1 ppb, the water solubility should be characterized as ''less than 1 ppb'' with no further quantification. For solubilities greater than 5,000 ppm, the shake flask method should be used, see paragraph (e)(15) of this section.

(c) *Test procedure*—(1) *Test conditions*—(i) *Special laboratory equipment*—(A) *Generator column*. (*1*) Either of two different designs shall be used depending on whether the eluted aqueous phase is analyzed by HPLC in paragraph (c)(3)(ii) of this section or by solvent extraction followed by GC (or any other reliable quantitative) analysis of solvent extract in paragraph (c)(3)(iv) of this section. The design of the generator column is shown in the following figure 1:

FIGURE 1—GENERATOR COLUMN

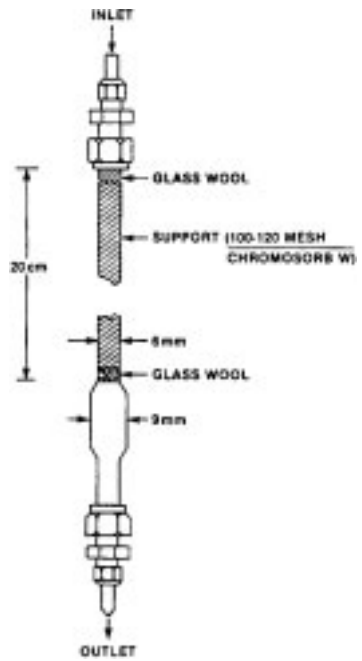

(*2*) The column consists of a 6 mm (¼ in) O.D. pyrex tube joined to a short enlarged section of 9 mm pyrex tubing which in turn is connected to another section of 6 mm (¼ in) O.D. pyrex tubing. Connections to the inlet teflon tubing (⅛ in O.D.) and to the outlet stainless steel tubing (1⁄16 in O.D.) shall be made by means of stainless steel fittings with teflon ferrules. The column

is enclosed in a water jacket for temperature control as shown in the following figure 2:

FIGURE 2—SETUP SHOWING GENERATOR COLUMN ENCLOSED IN A WATER JACKET AND OVERALL ARRANGEMENT OF THE APPARATUS USED IN THE GC METHOD

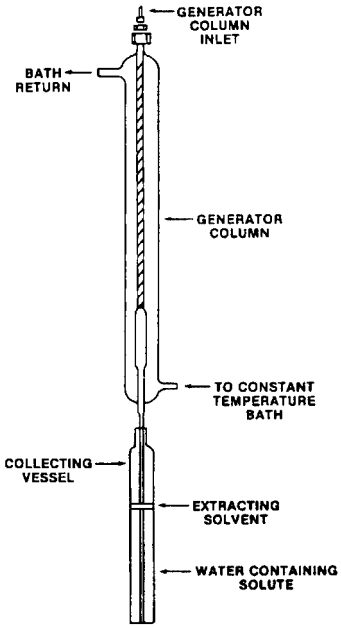

(B) Constant temperature bath with circulation pump-bath and capable of controlling temperature to ±0.05 °C, see paragraph (c)(3) of this section.

(C) HPLC equipped with a variable wavelenth UV absorption detector operating at a suitable wavelength and a recording integrator in paragraph (c)(3)(ii) of this section.

(D) Extractor column—6.6 × 0.6 cm stainless steel tube with end fittings containing 5 µm frits filled with a superficially porous phase packing (Bondapack C^{18}/Corasil: Waters Associates) in paragraph (c)(3)(ii) of this section.

(E) Two 6-port high-pressure rotary switching valves in paragraph (c)(3)(ii) of this section.

(F) Collection vessel—8 × ¾ in section of pyrex tubing with a flat bottom connected to a short section of ⅜ in O.D. borosilicate glass tubing in figure 2 in paragraph (c)(1)(i)(A)(*2*) of this section. The collecting vessel is sealed with a ⅜ in teflon cap fitting in paragraph (c)(3)(iii) of this section.

(G) GC, or any other reliable analytical equipment, which has a detector sensitive to the solute of interest in paragraph (c)(3)(iii) of this section.

(ii) *Purity of water.* Water meeting appropriate American Society for Testing and Materials (ASTM) Type II standards, or an equivalent grade, are recommended to minimize the effects of dissolved salts and other impurities on water solubility. ASTM Type II water is presented in the reference listed in paragraph (e)(13) of this section.

(iii) *Purity of solvents.* All solvents used in this method must be reagent or HPLC grade. Solvents must contain no impurities which could interfere with the determination of the test compound.

(iv) *Seawater.* When the water solubility in seawater is desired, the artificial seawater described in paragraph (c)(2)(ii) of this section must be used.

(v) *Effect of pH on solubility.* For chemicals that reversibly ionize or protonate with a pK_a or pK_b between 3 and 11, experiments must be performed at pH's 5.0, 7.0, and 9.0 using appropriate buffers.

(2) *Preparation of reagents and solutions*—(i) *Buffer solutions.* Prepare buffer solutions as follows:

(A) pH 3.0—to 250 mL of 0.10M potassium hydrogen phosphate add 111 mL of 0.10 M hydrochloric acid; adjust the final volume to 500 mL with reagent grade water.

(B) pH 5.0—to 250 mL of 0.1M potassium hydrogen phthalate add 113 mL of 0.1M sodium hydroxide; adjust the final volume to 500 mL with reagent grade water.

(C) pH 7.0—to 250 mL of 0.1M potassium dihydrogen phosphate add 145 mL of 0.1M sodium hydroxide; adjust the final volume to 500 mL with reagent grade water.

(D) pH 9.0—to 250 mL of 0.075M borax add 69 mL of 0.1M HCl; adjust the final volume to 500 mL with reagent grade water.

(E) pH 11.0—to 250 mL of 0.05 M sodium bicarbonate add 3 mL of 0.10 M

sodium hydroxide; adjust the final volume to 500 mL with reagent grade water.

(ii) Check the pH of each buffer solution with a pH meter at 25 °C and adjust to pH 5.0, 7.0, or 9.0, if necessary. If the pH of the solution has changed by ±0.2 pH units or more after the addition of the test compound, then a more concentrated buffer is required for that pH determination. The sponsor should then choose a more suitable buffer.

(iii) *Artificial seawater.* Add the reagent-grade chemicals listed in table 2 of this section in the specified amounts and order to 890 mL of reagent-grade water. Each chemical shall be dissolved before another one is added.

TABLE 2—CONSTITUENTS OF ARTIFICIAL SEAWATER[1]

Chemical	Amount
NaF	3 mg
$SrCl_2.6H_2O$	20 mg
H_3BO_3	30 mg
KBr	100 mg
KCl	700 mg
$CaCl_2.2H_2O$	1.47 gram (g)
Na_2SO_4	4.00 g
$MgCl_2.6H_2O$	10.78 g
NaCl	23.50 g
$Na_2SiO_3.9H_2O$	20 mg
$NaHCO_3$	200 mg

[1] If the resulting solution is diluted to 1 L, the salinity should be 34 ±0.5 g/kilogram (kg) and the pH 8.0 ±0.2. The desired test salinity is attained by dilution at time of use.

(3) *Performance of the test.* Using either the procedures in paragraph (c)(3)(ii) or (c)(3)(iii) of this section, determine the water solubility of the test compound at 25 °C in reagent-grade water or buffer solution, as appropriate. Under certain circumstances, it may be necessary to determine the water solubility of a test compound at 25 °C in artificial seawater. The water solubility can also be determined at other temperatures of environmental concern by adjusting the temperature of the water bath to the appropriate temperature.

(i) Prior to the determination of the water solubility of the test chemical, two procedures shall be followed.

(A) The saturated aqueous solution leaving the generator column must be tested for the presence of an emulsion, using a Tyndall procedure. If colloids are present, they must be eliminated prior to the injection into the extractor column. This may be achieved by lowering the flow rate of the water.

(B) The efficiency of the removal of the solute (i.e. test chemical) by the solvent extraction from the extraction column must be determined and used in the determination of the water solubility of the test chemical.

(ii) *Procedure A—HPLC method*—(A) *Scope.* (*1*) Procedure A covers the determination of the aqueous solubility of compounds which absorb in the UV.

(*i*) The HPLC analytical system is shown schematically in the following figure 3:

FIGURE 3—SCHEMATIC OF HPLC—GENERATOR COLUMN FLOW SYSTEM

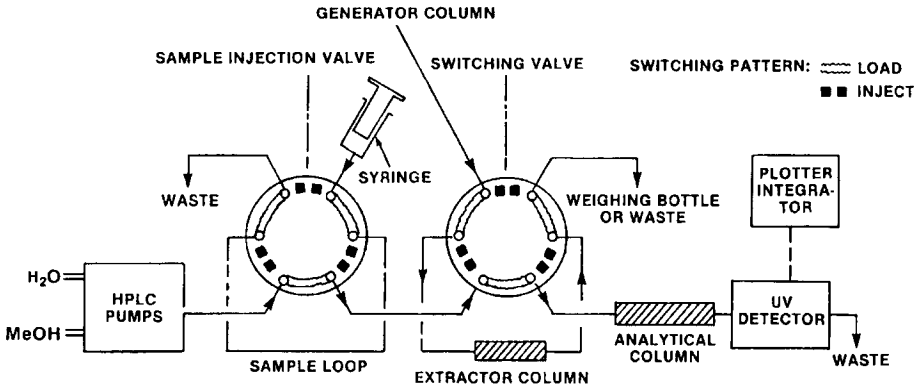

(*ii*) Two reciprocating piston pumps deliver the mobile phase (water or solvent/water mixture) through two 6-port high-pressure rotary valves and a 30 × 0.6 cm C^{18}/Corasil analytical column to a variable wavelength UV absorption detector operating at a suitable wavelength; chromatogram peaks are recorded and integrated with a recording integrator. One of the 6-port valves is the sample injection valve used for injecting samples of standard solutions of the solute in an appropriate concentration for determining RFs of standard solutions of basic chromate for determining the sample-loop volume. The other 6-port valve in the system serves as a switching valve for the extractor column which is used to remove solute from the aqueous solutions.

(*2*) The general procedure for analyzing the aqueous phase is as follows (a detailed procedure is given in paragraph (c)(3)(ii)(B)(*4*) of this section).

(*i*) Direct the aqueous solution to ''Waste,'' see figure 3 in paragraph (c)(3)(ii)(A)(*1*)(*i*) of this section, with the switching valve in the inject position in order to equilibrate internal surfaces with the solution, thus ensuring that the analyzed sample would not be depleted by solute adsorption on surfaces upstream from the valve.

(*ii*) At the same time, water is pumped from the HPLC pumps in order to displace the solvent from the extractor column.

(*iii*) The switching valve is next changed to the load position to divert a sample of the solution through the extractor column, and the liquid leaving this column is collected in a weighing bottle. During this extraction step, the mobile phase is changed to a solvent/water mixture to condition the analytical column.

(*iv*) After the desired volume of sample is extracted, the switching valve is returned to the inject position for elution and analysis. Assuming that there is no breakthrough of solute from the extractor column during the extraction step, the chromatographic peak represents all of the solute in the sample, provided that the extraction efficiency is 100%. If the extraction efficiency is less than 100%, then the extraction efficiency shall be used to determine the actual weight of the solute extracted.

(*v*) The solute concentration in the aqueous phase is calculated from the peak area and the weight of the extracted liquid collected in the weighing bottle.

(B) *Determinations*—(*1*) *Sample-loop volume.* Accurate measurement of the sample loop may be accomplished by using the spectrophotometric method of Devoe et al. under paragraph (e)(1) of this section. For this method measure absorbance, A_{loop}, at 373 nm of at least three solutions, each of which is prepared by collecting from the sample valve an appropriate number, n, of loopfuls of an aqueous stock solution of K_2CrO_4 (1.3% by weight) and diluting to 50 mL with 0.2% KOH. (For a 20 µL loop, use n = 5; for a 50 µL loop, use n = 2.) Also measure the absorbance, A_{stock}, of the same stock solution after diluting 1:500 with 0.2% KOH. Calculate the loop volume to the nearest 0.1 µL using the equation:

Equation 1:

$$V_{loop} = \left(A_{loop} / A_{stock}\right)\left(10^{-4}/n\right)$$

(*2*) *RF.* (*i*) For all determinations adjust the mobile phase solvent/water ratio and flow rate to obtain a reasonable retention time on the HPLC column. For example, typical concentrations of solvent in the mobile phase range from 50 to 100% while flow rates range from 1 to 3 mL/min; these conditions give a 3 to 5 min retention time.

(*ii*) Prepare standard solutions of known concentrations of the solute in a suitable solvent. Concentrations must give a recorder response within the maximum response of the detector. Inject samples of each standard solution into the HPLC system using the calibrated sample loop. Obtain an average peak area from at least three injections of each standard sample at a set absorbance unit full scale (AUFS), *i.e.*, at the same absorbance scale attenuation setting.

(*iii*) Calculate the RF from the following equation:

Equation 2:

$$\text{Response Factor (RF)} = \frac{\text{Concentration mol/L}}{(\text{Average Area})\,(\text{AUFS})}$$

(*3*) *Loading of the generator column.* (*i*) The design of the generator column was described in paragraph (c)(1)(i) of this section and is shown in figure 1 in paragraph (c)(1)(i)(A) of this section. To pack the column, a plug of silanized glass wool is inserted into one end of the 6 mm pyrex tubing. Silanized diatomaceous silica support (about 0.5g 100–120 mesh Chromosorb (W) chromatographic support material) is poured into the tube with tapping and retained with a second plug of silanized glass wool.

(*ii*) If the solute is a liquid, the column is loaded by pulling the liquid solute through the dry support with gentle suction. If the solute is a solid, a 1% solution of the solid in a volatile solvent is added to the dry packing. The solvent is then distilled off the column under reduced pressure. After loading the column draw water up through the column to remove entrapped air.

(*4*) *Analysis of the solute.* Use the following procedure to collect and analyze the solute.

(*i*) With the switching valve (figure 3 in paragraph (c)(3)(ii)(A)(*1*)(*i*) of this section) in the inject position (i.e., water to waste), pump water through the generator column at a flow rate of approximately 1 mL/min for approximately 5 minutes (min) to bring the system into equilibrium. Pump water to the generator column by means of a minipump or pressurized water reservoir as shown in the following figure 4:

FIGURE 4—WATER RESERVOIR FOR GC METHOD

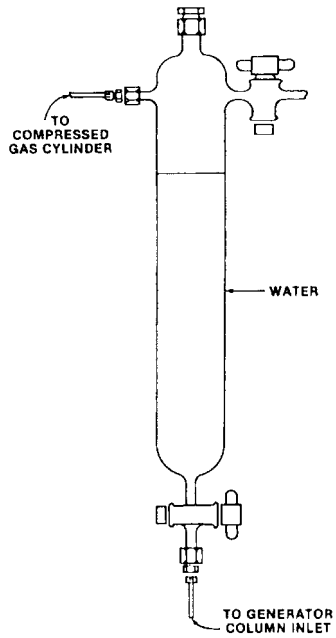

(*ii*) Flush out the solvent that remains in the system from previous runs by changing the mobile phase to 100% H_2O and allowing the water to reach the HPLC detector, as indicated by a negative reading. As soon as this occurs, place a 25 mL weighing bottle (weighed to the nearest mg) at the waste position and immediately turn the switching valve to the load position.

(*iii*) Collect an amount of water (as determined by trial and error) in the weighing bottle, corresponding to the amount of solute adsorbed by the extractor column that gives a large on-scale detector response. During this extraction step, switch back to the original HPLC mobile phase composition, i.e., solvent/water mixture, to condition the HPLC analytical column.

(*iv*) After the desired volume of sample has been extracted, turn the

switching valve back to the inject position (figure 3 in paragraph (c)(3)(ii)(A)(*1*)(*i*) of this section); at the same time turn on the recording integrator. The solvent/water mobile phase will elute the solute from the extractor column and transfer the solute to the HPLC analytical column.

(*v*) Remove the weighing bottle, cap it, and replace it with the waste container. Determine the weight of water collected to the nearest mg and record the corresponding peak area. Using the same AUFS setting repeat the analysis of the solute at least two more times and determine the average ratio of peak area to grams of water collected. In this equation, s = solubility (M), RF = response factor, V_{loop} = sample-loop volume (L), and R = ratio of area to grams of water. Calculate the solute solubility in water using the following equation:

Equation 3:

$$s = (997\ g/L)(RF)(V_{loop})(AUFS)(R)$$

(iii) *Procedure B—GC method*—(A) *Scope.* In the GC method, or any other analytical method, aqueous solutions from the generator column enter a collecting vessel (figure 2 in paragraph (c)(1)(i)(A)(*2*) of this section) containing a known weight of extracting solvent which is immiscible in water. The outlet of the generator column is positioned such that the aqueous phase always enters below the extracting solvent. After the aqueous phase is collected, the collecting vessel is stoppered and the quantity of aqueous phase is determined by weighing. The solvent and the aqueous phase are equilibrated by slowly rotating the collecting vessel. The extraction efficiency of the solvent must be determined at this time. A small amount of the extracting solvent is removed and injected into a gas chromograph equipped with an appropriate detector. The solute concentration in the aqueous phase is determined from a calibration curve constructed using known concentrations of the solute.

(B) *Alternative method.* If another (approved) analytical method is used instead of the GC, that method shall be used to determine quantitatively the amount of solute present in the extraction solvent.

(C) *Determinations*—(*1*) *Calibration curve.* (*i*) Prepare solute standard solutions of concentrations covering the range of the solute solubility. Select a column and optimum GC operating conditions for resolution between the solute and solvent and the solute and extracting solvent. Inject a known volume of each standard solution into the injection port of the GC. For each standard solution determine the average of the ratio R of peak area to volume (in microliters) for three chromatographic peaks from three injections.

(*ii*) After running all the standard solutions, determine the coefficients, a and b, using a linear regression equation of C vs. R in the following form:

Equation 4:

$$C = aR + b$$

(*iii*) If another analytical method is used, the procedures described in paragraph (c)(3)(iii)(C)(*1*) of this section shall be used to determine quantitatively the amount of solute in the extraction solvent.

(*2*) *Loading of the generator column.* The generator column is packed and loaded with solute in the same manner as for the HPLC method described under paragraph (c)(3)(ii)(B)(*3*) of this section. As shown in figure 2 in paragraph (c)(1)(i)(A)(*2*) of this section, attach approximately 20 cm of straight stainless steel tubing to the bottom of the generator column. Connect the top of the generator column to a water reservoir (figure 4 in paragraph (c)(3)(ii)(B)(*4*)(*i*) of this section) using teflon tubing. Use air or nitrogen pressure (5 PSI) from an air or nitrogen cylinder to force water from the reservoir through the column. Collect water in an Erlenmeyer flask for approximately 15 min while the solute concentration in water equilibrates; longer time may be required for less soluble compounds.

(*3*) *Collection and extraction of the solute.* During the equilibration time, add a known weight of extracting solvent to a collection vessel which can be capped. The extracting solvent should

cover the bottom of the collection vessel to a depth sufficient to submerge the collecting tube but still maintain 100:1 water/solvent ratio. Record the weight (to the nearest mg) of a collection vessel with cap and extracting solvent. Place the collection vessel under the generator column so that water from the collecting tube enters below the level of the extracting solvent (figure 2 in paragraph (c)(1)(i)(A)(*2*) of this section). When the collection vessel is filled, remove it from under the generator column, replace cap, and weigh the filled vessel. Determine the weight of water collected. Before analyzing for the solute, gently shake the collection vessel contents for approximately 30 min, controlling the rate of shaking so as not to form an emulsion; rotating the flask end over end five times per minute is sufficient.

(*4*) *Analysis of the solute.* (*i*) After shaking, allow the collection vessel to stand for approximately 30 min; then remove a known volume of the extracting solvent from the vessel using a microliter syringe and inject it into the GC. Record the ratio of peak area to volume injected and, from the regression equation of the calibration line, determine the concentration of solute in the extracting solvent. In this equation, C_{es} is the concentration of solute in extracting solvent (M), d_{H2O} and d_{es} are the densities of water and extracting solvent, respectively, and g_{es} and g_{H2O} are the grams of extracting solvent and water, respectively, contained in the collection vessel. The concentration of solute in water C(M) is determined from the following equation:

Equation 5:

$$C(M) = (C_{es})\left[\left(d_{H_2O}/d_{es}\right)\right]\left[\left(g_{es}/g_{H_2O}\right)\right]$$

(*ii*) Make replicate injections from each collecting vessel to determine the average solute concentration in water for each vessel. To make sure the generator column has reached equilibrium, run at least two additional (for a total of three) collection vessels and analyze the extracted solute as described above. Calculate the water solubility of the solute from the average solute concentration in the three vessels.

(iv) *Modification of procedures for potential problems.* If the test compound decomposes in one or more of the aqueous solvents required during the period of the test at a rate such that an accurate value for water solubility cannot be obtained, then it will be necessary to carry out detailed transformation studies; e.g., hydrolysis in paragraph (e)(16) of this section. If decomposition is due to aqueous photolysis, then it will be necessary to carry out water solubility studies in the dark, under red or yellow lights, or by any other suitable method to eliminate this transformation process.

(d) *Data and reporting*—(1) *Test report.* (i) For each set of conditions, (e.g., temperature, pure water, buffer solution, artificial seawater) required for the study, provide the water solubility value for each of three determinations, the mean value, and the standard deviation.

(ii) For compounds that decompose at a rate such that a precise value for the water solubility cannot be obtained, provide a statement to that effect.

(iii) For compounds with water solubility below 1 ppb, report the value as ''less than 1 ppb.''

(2) *Specific analytical, calibration, and recovery procedures.* (i) For the HPLC method describe and/or report:

(A) The method used to determine the sample-loop volume and the average and standard deviation of that volume.

(B) The average and standard deviation of the RF.

(C) Any changes made or problems encountered in the test procedure.

(ii) For the GC, or any other analytical, method report:

(A) The column and GC operating conditions of temperature and flow rate, or the operating conditions of any other analytical method used.

(B) The average and standard deviation of the average area per microliter obtained for each of the standard solutions.

(C) The form of the regression equation obtained in the calibration procedure.

(D) The extracting solvent used, and its extraction efficiency.

(E) The average and standard deviation of solute concentration in each collection vessel.

(F) Any changes made or problems encountered in the test procedure.

(G) If applicable, a complete description of the analytical method which was used instead of the GC method.

(e) *References.* For additional information on this test guideline, the following references should be consulted. These references are available from the TSCA Nonconfidential Information Center, Rm. NE-B607, Environmental Protection Agency, 401 M St., SW., Washington, DC, 12 noon to 4 p.m., Monday through Friday, excluding legal holidays.

(1) DeVoe, H. et al., Generator columns and high pressure liquid chromatography for determining aqueous solubilities and octanol-water partition coefficients of hydrophobic substances. *Journal of Research, National Bureau of Standards,* 86:361–366 (1981).

(2) Hansch, C. et al., The linear free-energy relationship between partition coefficients, and the aqueous solubility of organic liquids. *Journal of Organic Chemistry* 33:347-350 (1968).

(3) Leifer, A. et al., Environmental transport and transformation of polychlorinated biphenyls. Chapter 1. U.S. Environmental Protection Agency Report: EPA-560/5–83–005 (1983).

(4) Mackay, D. et al., Relationships between aqueous solubility and octanol-water partition coefficient. *Chemosphere* 9:701-711 (1980).

(5) May, W.E. et al., Determination of the aqueous solubility of polynuclear aromatic hydrocarbons by a coupled column liquid chromatographic technique. *Analytical Chemistry* 50:175–179 (1978).

(6) May, W.E. et al. Determination of the solubility behavior of some polycyclic aromatic hydrocarbons in the water. *Analytical Chemistry,* 50:997–1000 (1978a).

(7) Miller, N.M. et al., Aqueous solubilities, octanol/water partition coefficients, and entropy of melting of chlorinated benzenes and biphenyls. *Journal of Chemical and Engineering Data* 29:184-190 (1984).

(8) OECD/Organization for Economic Cooperation and Development. Test Guideline No. 105. Water solubility column elution-flask method (1981).

(9) Sutton, C. and Calder, J.A., Solubility of alkylbenzenes in distilled water and seawater at 25 °C. *Journal of Chemical and Engineering Data* 20:320–322 (1975).

(10) Tewari, Y.B. et al., Aqueous solubility and octanol/water partition coefficient of organic compounds at 25 °C. *Journal of Chemical and Engineering Data* 27:451-454 (1982).

(11) Wasik, S.P. et al., Octanol/Water Partition Coefficient and Aqueous Solubilities of Organic Compounds. NBS Report NBSIR 81–2406. Washington, DC: National Bureau of Standards, U.S. Department of Commerce (1981).

(12) Yalkowski, S.H. et al., ''Aquasol database of aqueous solubilities of organic compounds''; Fifth Edition. University of Arizona, College of Pharmacy, Tucson, AZ 85721 (1990) (available at *http://www.pharm.arizona.edu/aquasol/index.html*).

(13) ASTM D 1193–91, *Standard Specification for Reagent Water.* American Society for Testing and Materials (ASTM). 1916 Race St., Philadelphia, PA 19103.

Subparts F–G [Reserved]

Subpart H—Health Effects Test Guidelines

SOURCE: 62 FR 43824, Aug. 15, 1997, unless otherwise noted.

§ 799.9110 TSCA acute oral toxicity.

(a) *Scope.* This section is intended to meet the testing requirements under section 4 of the Toxic Substances Control Act (TSCA). In the assessment and evaluation of the toxic characteristics of a substance, determination of acute oral toxicity is usually an initial step. It provides information on health hazards likely to arise from short-term exposure by the oral route. Data from an acute study may serve as a basis for classification and labeling. It is traditionally a step in establishing a dosage regimen in subchronic and other studies and may provide initial information

on the mode of toxic action of a substance. An evaluation of acute toxicity data should include the relationship, if any, between the exposure of animals to the test substance and the incidence and severity of all abnormalities, including behavioral and clinical abnormalities, the reversibility of observed abnormalities, gross lesions, body weight changes, effects on mortality, and any other toxic effects.

(b) *Source.* The source material used in developing this TSCA test guideline is the Office of Prevention, Pesticides, and Toxic Substances (OPPTS) harmonized test guideline 870.1100 (August 1998, final guideline). This source is available at the address in paragraph (f) of this section.

(c) *Definitions.* The following definitions apply to this section.

Acute oral toxicity is the adverse effects occurring within a short period of time after oral administration of either a single dose of a substance or multiple doses given within a 24–hour period.

Dosage is a general term comprising the dose, its frequency, and the duration of dosing.

Dose is the amount of test substance administered. Dose is expressed as weight of test substance (milligrams, grams) per unit weight of test animal (e.g., milligrams per kilogram).

Dose-effect is the relationship between the dose and the magnitude of a defined biological effect either in an individual or in a population sample.

Dose-response is the relationship between the dose and the proportion of a population sample showing a defined effect.

LD_{50} (median lethal dose) is a statistically derived estimate of single dose of a substance that can be expected to cause death in 50% of animals when administered by the oral route. The LD_{50} value is expressed in terms of weight of test substance per unit weight of test animal (milligrams per kilogram).

(d) *Alternative approaches to the determination of acute toxicity.* (1) EPA will accept the following procedures to reduce the number of animals used to evaluate acute effects of chemical exposure while preserving its ability to make reasoned judgments about safety:

(i) *Estimation of acute oral toxicity.* When further study is warranted, EPA generally supports limiting such tests to those using the lowest number of animals feasible. EPA will accept three alternative Organization for Economic Cooperation and Development (OECD) test methods in place of the ''traditional'' acute oral toxicity test. The three OECD alternatives are the following:

(A) The up and down procedure as described in OECD Guideline 425 referenced in paragraph (f)(4) of this section.

(B) The acute toxic class method as described in OECD Guideline 423 and referenced in paragraph (f)(6) of this section.

(C) The fixed dose method as described in OECD Guideline 420 and referenced in paragraph (f)(5) of this section.

(ii) *Limit test.* When data on structurally related chemicals are inadequate, a limit test may be considered. If rodents are used, a limit dose of at least 2,000 mg per kilogram of body weight may be administered to a single group of five males and five females using the procedures described in paragraph (e) of this section. If no lethality is demonstrated, no further testing for acute oral toxicity is needed. (Under current policy and regulations for pesticide products, precautionary statements may still be required unless there are data to indicate the LD_{50} is greater than 5,000 mg/kg.) If compound-related mortality is produced in the limit test, further study may need to be considered.

(2) [Reserved]

(e) *Conventional acute toxicity test*—(1) *Principle of the test method.* The test substance is administered orally by gavage in graduated doses to several groups of experimental animals, one dose being used per group. The doses chosen may be based on the results of a range finding test. Subsequently, observations of effects and deaths are made. Animals that die during the test are necropsied, and at the conclusion of the test the surviving animals are sacrificed and necropsied. This section is directed primarily to studies in rodent species but may be adapted for studies in nonrodents. Animals showing severe

and enduring signs of distress and pain may need to be humanely sacrificed. Dosing test substances in a way known to cause marked pain and distress due to corrosive or irritating properties need not be carried out.

(2) *Substance to be tested.* Test, control, and reference substances are described in 40 CFR Part 792—Good Laboratory Practice Standards.

(3) *Test procedures*—(i) *Preparations.* Healthy young adult animals are acclimatized to the laboratory conditions for at least 5 days prior to the test before the test animals are randomized and assigned to the treatment groups.

(ii) *Animal selection*—(A) *Species and strain.* Although several mammalian test species may be used, the rat is the preferred species. Commonly used laboratory strains must be employed. If another species is used, the tester must provide justification and reasoning for its selection.

(B) *Age.* Young adult rats between 8- and 12-weeks-old at the beginning of dosing should be used. Rabbits should be at least 12 weeks of age at study initiation. The weight variation of animals used in a test must be within 20% of the mean weight for each sex.

(C) *Number and sex of animals.* (*1*) At least five experimentally naive rodents are used at each dose level. They should all be of the same sex. After completion of the study in one sex, at least one group of five animals of the other sex is dosed to establish that animals of this sex are not markedly more sensitive to the test substance. The use of fewer animals may be justified in individual circumstances. Where adequate information is available to demonstrate that animals of the sex tested are markedly more sensitive, testing in animals of the other sex may be dispensed with. An acceptable option would be to test at least one group of five animals per sex at one or more dose levels to definitively determine the more sensitive sex prior to conducting the main study.

(*2*) The females must be nulliparous and nonpregnant.

(*3*) In acute toxicity tests with animals of a higher order than rodents, the use of smaller numbers should be considered.

(D) *Assignment of animals.* Each animal must be assigned a unique identification number. A system to assign animals to test groups and control groups randomly is required.

(E) *Housing.* Animals may be group-caged by sex, but the number of animals per cage must not interfere with clear observation of each animal. The biological properties of the test substance or toxic effects (e.g., morbidity, excitability) may indicate a need for individual caging.

(*1*) The temperature of the experimental animal rooms should be at 22±3 °C for rodents.

(*2*) The relative humidity of the experimental animal rooms should be 30 to 70%.

(*3*) Where lighting is artificial, the sequence should be 12–hours light/12–hours dark.

(*4*) For feeding, conventional laboratory diets may be used with an unlimited supply of drinking water.

(iii) *Dose levels and dose selection.* (A) Three dose levels must be used, spaced appropriately to produce test groups with a range of toxic effects and mortality rates. The data collected must be sufficient to produce a dose-response curve and permit an acceptable estimation of the LD_{50}. Range finding studies using single animals may help to estimate the positioning of dose groups so that no more than three dose levels will be necessary.

(B) *Limit test.* This test has been defined and described in paragraph (d)(1)(ii) of this section.

(C) *Vehicle.* Where necessary, the test substance is dissolved or suspended in a suitable vehicle. If a vehicle or diluent is needed, it should not elicit toxic effects itself nor substantially alter the chemical or toxicological properties of the test substance. It is recommended that wherever possible the use of an aqueous solution be considered first, followed by consideration of a solution in oil (e.g., corn oil), and then by consideration of possible solution in other vehicles. Toxic characteristics of non-aqueous vehicles should be known, and, if not known, should be determined before the test.

(D) *Volume.* The maximum volume of liquid that can be administered at one time depends on the size of the test

animal. In rodents, the volume should not exceed 1 mL/100 g body weight, except when an aqueous solution is used in which case 2 mL/100 g may be administered. Either constant volume or constant concentration administration is acceptable when dosing, provided the following guidance is employed. When possible, the liquid test material should be dosed neat. Otherwise, it may be diluted, using the highest concentration possible, although volumes less than 0.5 mL per animal would not be required. Lower dose volumes are acceptable if they can be accurately administered. Solid materials should be suspended or dissolved in the minimum amount of vehicle and dosed at the highest concentration possible.

(iv) *Exposure and exposure duration.* (A) Animals must be fasted prior to test substance administration. For the rat, feed should be withheld overnight; for other rodents with higher metabolic rates a shorter period of fasting is appropriate.

(B) The test substance must be administered in a single dose by gavage, using a stomach tube or suitable intubation cannula.

(C) If a single dose is not possible, the dose may be given in smaller fractions over a period not exceeding 24 hours. Where a dose is administered in fractions, it may be necessary to provide the animals with food and water, depending on the length of the dosing period.

(D) After the substance has been administered, feed may be withheld for an additional 3–4 hours.

(v) *Observation period.* Although 14 days is recommended as a minimum observation period, the duration of observation should not be fixed rigidly. It should be determined by the toxic reactions, rate of onset, and length of recovery period, and may thus be extended when considered necessary. The time at which signs of toxicity appear, their duration, and the time to death are important, especially if there is a tendency for deaths to be delayed.

(vi) *Observation of animals.* (A) A careful clinical examination must be made at least once each day.

(B) Additional observations must be made daily, especially in the early days of the study. Appropriate actions should be taken to minimize loss of animals to the study (e.g., necropsy or refrigeration of those animals found dead and isolation of weak or moribund animals).

(C) Observations must be detailed and carefully recorded, preferably using explicitly defined scales. Observations should include, but not be limited to, evaluation of skin and fur, eyes and mucous membranes, respiratory and circulatory effects, autonomic effects such as salivation, central nervous system effects, including tremors and convulsions, changes in the level of activity, gait and posture, reactivity to handling or sensory stimuli, altered strength, and stereotypies or bizarre behavior (e.g., self-mutilation, walking backwards).

(D) Individual weights of animals must be determined shortly before the test substance is administered, weekly thereafter, and at death. Changes in weights should be calculated and recorded when survival exceeds 1 day.

(E) The time of death should be recorded as precisely as possible.

(vii) *Gross pathology.* (A) At the end of the test, surviving animals must be weighed and sacrificed.

(B) A gross necropsy must be performed on all animals under test. All gross pathology changes should be recorded.

(C) If necropsy cannot be performed immediately after a dead animal is discovered, the animal should be refrigerated (not frozen) at temperatures low enough to minimize autolysis. Necropsies should be performed as soon as practicable, normally within a day or two.

(viii) *Additional evaluation.* Microscopic examination of organs showing evidence of gross pathology in animals surviving 24 hours or more should also be considered because it may yield useful information.

(ix) *Data and reporting*—(A) *Treatment of results.* Data must be summarized in tabular form, showing for each test group the number of animals at the start of the test, body weights, time of death of individual animals at different dose levels, number of animals displaying other signs of toxicity, description of toxic effects, and necropsy findings. Any methods used for calculation

of the LD_{50} or any other parameters should be specified and referenced. Methods for parameter estimation are described in the references listed in paragraphs (f)(1), (f)(2), and (f)(3) of this section.

(B) *Evaluation of results.* An evaluation should include the relationship, if any, between exposure of the animals to the test substance and the incidence and severity of all abnormalities, including behavioral and clinical abnormalities, gross lesions, body weight changes, effects on mortality, and any other toxic effects. The LD_{50} value should always be considered in conjunction with the observed toxic effects and any necropsy findings. The LD_{50} value is a relatively coarse measurement, useful only as a reference value for classification and labeling purposes, and for an expression of the lethal potential of the test substance by the ingestion route. Reference should always be made to the experimental animal species in which the LD_{50} value was obtained.

(C) *Test report.* In addition to the reporting requirements specified under EPA Good Laboratory Practice Standards at 40 CFR part 792, subpart J, the following specific information must be reported. The test report shall include:

(*1*) Species, strain, sex, and source of test animals.

(*2*) Method of randomization in assigning animals to test and control groups.

(*3*) Rationale for selection of species, if other than that recommended.

(*4*) Tabulation of individual and test group data by sex and dose level (e.g., number of animals exposed, number of animals showing signs of toxicity and number of animals that died or were sacrificed during the test).

(*i*) Description of toxic effects, including their time of onset, duration, reversibility, and relationship to dose.

(*ii*) Body weights.

(*iii*) Time of dosing and time of death after dosing.

(*iv*) Dose-response curves for mortality and other toxic effects (when permitted by the method of determination).

(*v*) Gross pathology findings.

(*vi*) Histopathology findings and any additional clinical chemistry evaluations, if performed.

(*5*) Description of any pretest conditioning, including diet, quarantine and treatment for disease.

(*6*) Description of caging conditions including: Number (or change in number) of animals per cage, bedding material, ambient temperature and humidity, photoperiod, and identification of diet of test animals.

(*7*) Manufacturer, source, purity, and lot number of test substance.

(*8*) Relevant properties of substance tested including physical state and pH (if applicable).

(*9*) Identification and composition of any vehicles (e.g., diluents, suspending agents, and emulsifiers) or other materials used in administering the test substance.

(*10*) A list of references cited in the body of the report. References to any published literature used in developing the test protocol, performing the testing, making and interpreting observations, and compiling and evaluating the results.

(f) *References.* For additional background information on this test guideline, the following references should be consulted. These references are available for inspection at the TSCA Nonconfidential Information Center, Rm. NE-B607, Environmental Protection Agency, 401 M St., NW., Washington, DC, 12 noon to 4 p.m., Monday through Friday, except legal holidays.

(1) Chanter, D.O. and Heywood, R. The LD_{50} Test: Some Considerations of Precision. *Toxicology Letters* 10:303–307 (1982).

(2) Finney, D.J. Chapter 3—Estimation of the median effective dose and Chapter 4—Maximum likelihood estimation, *Probit Analysis,* 3rd ed. Cambridge, London (1971).

(3) Finney, D.J. The Median Lethal Dose and Its Estimation. *Archives of Toxicology* 56:215–218 (1985).

(4) Organization for Economic Cooperation and Development. OECD Guidelines for the Testing of Chemicals. OECD Guideline 425: Acute Oral Toxicity: Up-and-Down Procedure, Approved: June 1998.

(5) Organization for Economic Cooperation and Development. OECD

Guidelines for Testing of Chemicals. Guideline 420: Acute Oral Toxicity—Fixed Dose Method, Adopted: July 17, 1992.

(6) Organization for Economic Co-operation and Development. OECD Guidelines for Testing of Chemicals. Guideline 423: Acute Oral Toxicity—Acute Toxic Class Method, Adopted: March 22, 1996.

(7) Organization for Economic Co-operation and Development. OECD Guidelines for Testing of Chemicals. Guideline 401: Acute Oral Toxicity, Adopted: February 24, 1987.

[65 FR 78771, Dec. 15, 2000]

§ 799.9120 TSCA acute dermal toxicity.

(a) *Scope.* This section is intended to meet the testing requirements under section 4 of the Toxic Substances Control Act (TSCA). In the assessment and evaluation of the toxic characteristics of a substance, determination of acute dermal toxicity is useful where exposure by the dermal route is likely. It provides information on health hazards likely to arise from short-term exposure by the dermal route. Data from an acute study may serve as a basis for classification and labeling. It is an initial step in establishing a dosage regimen in subchronic and other studies and may provide information on dermal absorption and the mode of toxic action of a substance by this route. An evaluation of acute toxicity data should include the relationship, if any, between the exposure of animals to the test substance and the incidence and severity of all abnormalities, including behavioral and clinical abnormalities, the reversibility of observed abnormalities, gross lesions, body weight changes, effects on mortality, and any other toxic effects.

(b) *Source.* The source material used in developing this TSCA test guideline is the Office of Prevention, Pesticides, and Toxic Substances (OPPTS) harmonized test guideline 870.1200 (August 1998, final guideline). This source is available at the address in paragraph (f) of this section.

(c) *Definitions.* The following definitions apply to this section.

Acute dermal toxicity is the adverse effects occurring within a short time of dermal application of a single dose of a substance or multiple doses given within a 24–hour period.

Dosage is a general term comprising the dose, its frequency and the duration of dosing.

Dose is the amount of test substance applied. Dose is expressed as weight of test substance (grams, milligrams) per unit weight of test animal (e.g., milligrams per kilogram).

Dose-effect is the relationship between the dose and the magnitude of a defined biological effect either in an individual or in a population sample.

Dose-response is the relationship between the dose and the proportion of a population sample showing a defined effect.

LD_{50} (median lethal dose), dermal, is a statistically derived estimate of a single dose of a substance that can be expected to cause death in 50% of treated animals when applied to the skin. The LD_{50} value is expressed in terms of weight of test substance per unit weight of test animal (milligrams per kilogram).

(d) *Approaches to the determination of acute toxicity.* (1) EPA recommends the following means to reduce the number of animals used to evaluate acute effects of chemical exposure while preserving its ability to make reasonable judgments about safety:

(i) Using data from substantially similar mixtures. In order to minimize the need for animal testing, the Agency encourages the review of existing acute toxicity information on mixtures that are substantially similar to the mixture under investigation. In certain cases it may be possible to glean enough information to make preliminary hazard evaluations that may reduce the need for further animal testing.

(ii) *Limit test.* When data on structurally related chemicals are inadequate, a limit test may be considered. If rodents are used, a limit dose of at least 2,000 mg/kg bodyweight may be administered to a single group of five males and five females using the procedures described in paragraph (e) of this section. If no lethality is demonstrated, no further testing for acute dermal toxicity is needed. If compound-related mortality is produced,

further study may need to be considered.

(2) [Reserved]

(e) *Conventional acute toxicity test*—(1) *Principle of the test method.* The test substance is applied dermally in graduated doses to several groups of experimental animals, one dose being used per group. The doses chosen may be based on the results of a range finding test. Subsequently, observations of effects and deaths are made. Animals that die during the test are necropsied, and at the conclusion of the test the surviving animals are sacrificed and necropsied. This section is directed primarily to studies in either rats, rabbits, or guinea pigs but may be adapted for studies in other species. Animals showing severe and enduring signs of distress and pain may need to be humanely sacrificed. Dosing test substances in a way known to cause marked pain and distress due to corrosive or irritating properties need not be carried out.

(2) *Substance to be tested.* Test, control, and reference substances are discussed in 40 CFR Part 792—Good Laboratory Practice Standards.

(3) *Test procedures*—(i) *Preparations.* Healthy young adult animals are acclimatized to the laboratory conditions for at least 5 days prior to the test before the test animals are randomized and assigned to the treatment groups.

(ii) *Animal selection*—(A) *Species and strain.* The rat, rabbit, or guinea pig may be used. The albino rabbit is preferred because of its size, ease of handling, skin permeability, and extensive data base. Commonly used laboratory strains must be employed. If a species other than rats, rabbits, or guinea pigs is used, the tester must provide justification and reasoning for its selection.

(B) *Age.* Young adult animals, rats between 8- and 12-weeks-old, rabbits at least 12-weeks-old, and guinea pigs between 5- and 6-weeks-old at the beginning of dosing should be used. The weight variation of animals used in a test must be within 20% of the mean weight for each sex.

(C) *Number and sex of animals.* (*1*) At least five experimentally naive animals with healthy intact skin are used at each dose level. They should all be of the same sex. After completion of the study in one sex, at least one group of five animals of the other sex is dosed to establish that animals of this sex are not markedly more sensitive to the test substance. The use of fewer animals may be justified in individual circumstances. Where adequate information is available to demonstrate that animals of the sex tested are markedly more sensitive, testing in animals of the other sex may be dispensed with. An acceptable option would be to test at least one group of five animals per sex at one or more dose levels to definitively determine the more sensitive sex prior to conducting the main study.

(*2*) The females must be nulliparous and nonpregnant.

(*3*) In acute toxicity tests with animals of a higher order than those mentioned above, the use of smaller numbers should be considered.

(D) *Assignment of animals.* Each animal must be assigned a unique identification number. A system to randomly assign animals to test groups and control groups is required.

(E) *Housing.* Animals should be housed in individual cages.

(*1*) The temperature of the experimental animal rooms should be at 22±3 °C for rodents, 20±3 °C for rabbits.

(*2*) The relative humidity of the experimental animal rooms should be 30 to 70%.

(*3*) Where lighting is artificial, the sequence should be 12–hours light/12–hours dark.

(*4*) For feeding, conventional laboratory diets may be used with an unlimited supply of drinking water.

(iii) *Dose levels and dose selection.* (A) Three dose levels must be used and spaced appropriately to produce test groups with a range of toxic effects and mortality rates. The data must be sufficient to produce a dose-response curve and permit an acceptable estimation of the median lethal dose. Range finding studies using single animals may help to estimate the positioning of the dose groups so that no more than three dose levels will be necessary.

(B) *Limit test.* This test is described in paragraph (d)(2)(ii) of this section.

(C) *Vehicle.* Solids should be pulverized when possible. The test substance

should be moistened sufficiently with water or, where necessary, a suitable vehicle to ensure good contact with skin. If a vehicle or diluent is needed, it should not elicit toxic effects itself nor substantially alter the chemical or toxicological properties of the test substance. In addition, the influence of the vehicle on penetration of skin by the test substance should be taken into account. It is recommended that wherever possible the use of an aqueous solution be considered first, followed by consideration of a solution in oil (e.g., corn oil), and then by consideration of possible solution in other vehicles. For nonaqueous vehicles the toxic characteristics of the vehicle should be known, and if not known should be determined before the test. Acceptable alternative vehicles include gum arabic, ethanol and water, carboxymethyl cellulose, glycerol, propylene glycol, PEG vegetable oil, and mineral oil as long as the vehicle is not irritating and the inability to use water or saline is justified in the report.

(iv) *Exposure and exposure duration.* The test substance must be administered over a period of 24 hours.

(v) *Preparation of animal skin.* Fur must be clipped from the dorsal area of the trunk of the test animals. Shaving may be employed, but it should be carried out at least 24 hours before dosing. Care must be taken to avoid abrading the skin, which would alter its permeability.

(vi) *Application of test substance.* (A) The test substance must be applied uniformly over a shaved or clipped area which is approximately 10% of the body surface area. The area starting at the scapulae (shoulders) to the wing of the ileum (hip bone) and half way down the flank on each side of the animal should be shaved or clipped. Liquid test materials should be undiluted if possible. With highly toxic substances, the surface area covered may be less, but as much of the area as possible should be covered with as thin and uniform a film as practical. The test material is not removed until 24 hours after application. In the case where less than 10% of the surface area is covered an approximation of the exposed areas should be determined.

(B) The test substance must be held in contact with the skin with a porous gauze dressing (<8 ply) and nonirritating tape throughout a 24–hour exposure period. The test site must be further covered in a suitable manner to retain the gauze dressing and test substance and ensure that the animals cannot ingest the test substance. Restrainers may be used to prevent the ingestion of the test substance, but complete immobilization is not a recommended method. Although a semiocclusive dressing is preferred, an occlusive dressing will also be acceptable.

(C) At the end of the exposure period, residual test substance should be removed where practicable using water or an appropriate solvent.

(vii) *Observation period.* Although 14 days is recommended as a minimum observation period, the duration of observation should not be fixed rigidly. It should be determined by the toxic reactions, rate of onset, and length of recovery period, and may thus be extended when considered necessary. The time at which signs of toxicity appear, their duration, and the time to death are important, especially if there is a tendency for deaths to be delayed.

(viii) *Observation of animals.* (A) A careful clinical examination must be made at least once each day.

(B) Additional observations must be made daily, especially in the early days of the study. Appropriate actions should be taken to minimize loss of animals to the study (e.g., necropsy or refrigeration of those animals found dead and isolation of weak or moribund animals).

(C) Observations must be detailed and carefully recorded, preferably using explicitly defined scales. Observations should include, but not be limited to, evaluation of skin and fur, eyes and mucous membranes, respiratory and circulatory effects, autonomic effects such as salivation, central nervous system effects, including tremors and convulsions, changes in the level of activity, gait and posture, reactivity to handling or sensory stimuli, altered strength, and stereotypies or bizarre behavior (*e.g.*, self-mutilation, walking backwards).

(D) Individual weights of animals must be determined shortly before the test substance is administered, weekly thereafter, and at death. Changes in weights should be calculated and recorded when survival exceeds one day.

(E) The time of death should be recorded as precisely as possible.

(ix) *Gross pathology.* (A) At the end of the test, surviving animals must be weighed and sacrificed.

(B) A gross necropsy must be performed on all animals under test. All gross pathology changes should be recorded.

(C) If necropsy cannot be performed immediately after a dead animal is discovered, the animal should be refrigerated (not frozen) at temperatures low enough to minimize autolysis. Necropsies should be performed as soon as practicable, normally within a day or two.

(x) *Additional evaluations.* Microscopic examination of organs showing evidence of gross pathology in animals surviving 24 hours or more should also be considered because it may yield useful information.

(xi) *Data and reporting*—(A) *Treatment of results.* Data must be summarized in tabular form, showing for each test group the number of animals at the start of the test, body weights, time of death of individual animals at different dose levels, number of animals displaying other signs of toxicity, description of toxic effects and necropsy findings. Any methods used for calculation of the LD_{50} or any other parameters should be specified and referenced. Methods for parameter estimation are described in the references listed in paragraphs (f)(1), (f)(2), and (f)(3) of this section.

(B) *Evaluation of results.* An evaluation should include the relationship, if any, between exposure of the animals to the test substance and the incidence and severity of all abnormalities, including behavioral and clinical abnormalities, gross lesions, body weight changes, effects on mortality, and any other toxic effects. The LD_{50} value should always be considered in conjunction with the observed toxic effects and any necropsy findings. The LD_{50} value is a relatively coarse measurement, useful only as a reference value for classification and labeling purposes, and for an expression of the lethal potential of the test substance by the dermal route. Reference should always be made to the experimental animal species in which the LD_{50} value was obtained.

(C) *Test report.* In addition to the reporting requirements specified under EPA Good Laboratory Practice Standards at 40 CFR part 792, subpart J, the following specific information must be reported. The test report must include:

(*1*) Species, strain, sex, and source of test animals.

(*2*) Method of randomization in assigning animals to test and control groups.

(*3*) Rationale for selection of species, if other than that recommended.

(*4*) Tabulation of individual and test group data by sex and dose level (*e.g.*, number of animals exposed, number of animals showing signs of toxicity and number of animals that died or were sacrificed during the test).

(*i*) Description of toxic effects, including their time of onset, duration, reversibility, and relationship to dose.

(*ii*) Body weights.

(*iii*) Time of dosing and time of death after dosing.

(*iv*) Dose-response curves for mortality and other toxic effects (when permitted by the method of determination).

(*v*) Gross pathology findings.

(*vi*) Histopathology findings and any additional clinical chemistry evaluations, if performed.

(*5*) Description of any pre-test conditioning, including diet, quarantine and treatment for disease.

(*6*) Description of caging conditions including: Number (or change in number) of animals per cage, bedding material, ambient temperature and humidity, photoperiod, and identification of diet of test animals.

(*7*) Manufacturer, source, purity, and lot number of test substance.

(*8*) Relevant properties of substance tested including physical state and pH (if applicable).

(*9*) Identification and composition of any vehicles (e.g., diluents, suspending agents, and emulsifiers) or other materials used in administering the test substance.

(*10*) A list of references cited in the body of the report. References to any published literature used in developing the test protocol, performing the testing, making and interpreting observations, and compiling and evaluating the results.

(f) *References.* For additional background information on this test guideline, the following references should be consulted. These references are available for inspection at the TSCA Nonconfidential Information Center, Rm. NE-B607, Environmental Protection Agency, 401 M St., NW., Washington, DC, 12 noon to 4 p.m., Monday through Friday, except legal holidays.

(1) Chanter, D.O. and Heywood, R., The LD_{50} Test: Some Considerations of Precision, *Toxicology Letters* 10:303–307 (1982).

(2) Finney, D.J. Chapter 3—Estimation of the median effective dose and Chapter 4-Maximum likelihood estimation, *Probit Analysis,* 3rd ed. Cambridge, London (1971).

(3) Finney, D.J. The Median Lethal Dose and Its Estimation. *Archives of Toxicology* 56:215–218 (1985).

(4) Organization for Economic Cooperation and Development. OECD Guideline for the Testing of Chemicals. OECD Guideline 425: Acute Oral Toxicity: Up-and-Down Procedure. Adopted: September 21, 1998.

(5) Organization for Economic Cooperation and Development. OECD Guidelines for Testing of Chemicals. Guideline 420: Acute Oral Toxicity—Fixed Dose Method. Adopted: July 17, 1992.

(6) Organization for Economic Cooperation and Development. OECD Guidelines for Testing of Chemicals. Guideline 423: Acute Oral Toxicity—Acute Toxic Class Method. Adopted: March 22, 1996

(7) Organization for Economic Cooperation and Development. OECD Guidelines for Testing of Chemicals. Guideline 402: Acute Dermal Toxicity. Adopted: February 24, 1987.

[65 FR 78774, Dec. 15, 2000]

§ 799.9130 TSCA acute inhalation toxicity.

(a) *Scope.* This section is intended to meet testing requirements under section 4 of the Toxic Substances Control Act (TSCA). Determination of acute toxicity is usually an initial step in the assessment and evaluation of the toxic characteristics of a substance that may be inhaled such as a gas, volatile substance, or aerosol/particle. It provides information on health hazards likely to arise from short-term exposure by the inhalation route. Data from an acute study may serve as a basis for classification and labeling. It is traditionally a step in establishing a dosage regimen in subchronic and other studies and may provide initial information on the mode of toxic action of a substance. An evaluation of acute toxicity data should include the relationship, if any, between the animals' exposure to the test substance and the incidence and severity of all abnormalities, including behavioral and clinical abnormalities, the reversibility of observed abnormalities, gross lesions, body weight changes, effects on mortality, and any other toxic effects.

(b) *Source.* The source material used in developing this TSCA test guideline is the harmonized Office of Prevention, Pesticides, and Toxic Substances (OPPTS) test guideline 870.1300 (August 1998, final guideline). These sources are available at the address in paragraph (g) of this section.

(c) *Definitions.* The definitions in section 3 of TSCA and the definitions in 40 CFR Part 792—Good Laboratory Practice Standards apply to this section. The following definitions also apply to this section.

Acute inhalation toxicity is the adverse effect caused by a substance following a single uninterrupted exposure by inhalation over a short period of time (24 hours or less) to a substance capable of being inhaled.

Aerodynamic equivalent diameter is defined as the diameter of a unit-density sphere having the same terminal settling velocity as the particle in question, whatever its size, shape, and density. It is used to predict where in the respiratory tract such particles may be deposited.

Concentration is expressed as weight of the test substance per unit volume of air, e.g., milligrams per liter.

Geometric standard deviation (GSD) is a dimensionless number equal to the

ratio between the mass median aerodynamic diameter (MMAD) and either 84% or 16% of the diameter size distribution (*e.g.*, MMAD = 2 m; 84% = 4 m; GSD = 4/2 = 2.0.) The MMAD, together with the GSD, describe the particle size distribution of an aerosol. Use of the GSD may not be valid for nonlognormally distributed aerosols. (If the size distribution deviates from the lognormal, it shall be noted).

Inhalable diameter refers to that aerodynamic diameter of a particle which is considered to be inhalable for the organism under study. It is used to refer to particles which are capable of being inhaled and deposited anywhere within the respiratory tract .

LC_{50} (median lethal concentration) is a statistically derived estimate of a concentration of a substance that can be expected to cause death during exposure or within a fixed time after exposure in 50% of animals exposed for a specified time. The LC_{50} value is a relatively coarse measurement useful only for classification and labeling purposes and an expression of the lethal potential of the test substance following inhalation. The LC_{50} value is expressed as weight of test substance per unit volume of air (milligrams per liter) or parts per million. For clarity, the exposure duration and test animal species should also be specified, *e.g.*, 4 hours LC_{50} in F344.

Mass median aerodynamic diameter (MMAD) is the median aero-dynamic diameter and, along with the geometric standard deviation, is used to describe the particle size distribution of any aerosol statistically, based on the weight and size of the particles. Fifty percent of the particles by weight will be smaller than the median diameter and 50% of the particles will be larger.

(d) *Approaches to the determination of acute toxicity.* (1) EPA recommends the following means to reduce the number of animals used to evaluate acute effects of chemical exposure while preserving its ability to make reasonable judgments about safety:

(i) Using data from substantially similar mixtures. In order to minimize the need for animal testing, the Agency encourages the review of existing acute toxicity information on mixtures that are substantially similar to mixtures under investigation. In certain cases, it may be possible to get enough information to make preliminary hazard evaluations that may reduce the need for further animal testing.

(ii) Limit test. When data on structurally related chemicals are inadequate, a limit test may be considered. In the limit test, a single group of five males and five females is exposed to 2 mg/L for 4 hours, or where this is not possible due to physical or chemical properties of the test substance, the maximum attainable concentration where a particle size distribution having an MMAD between 1 and 4 µm cannot be maintained, using the procedures described under paragraph (e) of this section. For fibers, the bivariate distribution of length and diameter must ensure inhalability. For gases and vapors, the concentrations need not be greater than 50,000 ppm or 50% of the lower explosive limit, whichever is lower. If a test at an aerosol or particulate exposure of 2 mg/L (actual concentration of respirable substance) for 4 hours or, where this is not feasible, the maximum attainable concentration, using the procedures described for this study, produces no observable toxic effects, then a full study using three concentrations will not be necessary. Similarly, if a test at a gas or vapor exposure of 50,000 ppm or 50% of the lower explosive limit, whichever is lower, produces no observable toxic effects, then a full study using three concentrations will not be necessary.

(2) [Reserved]

(e) *Conventional acute toxicity test*—(1) *Principle of the test method.* Several groups of experimental animals are exposed to the test substance in graduated concentrations for a defined period, one concentration being used per group. When a vehicle other than water is used to help generate an appropriate concentration of the substance in the atmosphere, a vehicle control group should be used when historical data are not available or adequate to determine the acute inhalation toxicity of the vehicle. Subsequently, observations of effects and death are made. Animals that die during the test are necropsied and at the conclusion of the test surviving animals are sacrificed and necropsied. This guideline is directed primarily to

studies in rodent species but may be adapted for studies in non-rodents. Animals showing severe and enduring signs of distress and pain may need to be sacrificed. Dosing test substances in a way known to cause marked pain and distress due to corrosive or irritating properties need not be carried out.

(2) *Substance to be tested.* Test, control, and reference substances are discussed under EPA Good Laboratory Practice Standards at 40 CFR part 792, subpart f.

(3) *Test procedures*—(i) *Preparation.* Healthy young adult animals are acclimatized to the laboratory conditions for at least 5 days prior to the test. Before the test, animals are randomized and assigned to the required number of groups.

(ii) *Animal selection*—(A) *Species and strain.* (*1*) Although several mammalian test species may be used, the preferred species is the rat. Commonly used laboratory strains should be employed. If another mammalian species is used, the investigator should provide justification and reasoning for the selection.

(*2*) *Health Status.* Body weight and feed consumption are not sufficient indicators of the health status of animals prior to initiating an inhalation toxicity study. Prior to initiating the study, animals must be monitored for known viral and bacterial respiratory pathogens determined by conventional microbiological assays (e.g., serology). The animals must be free from pathogens at the start of exposure.

(B) *Age.* Young adult rats between 8–12 weeks old at the beginning of dosing, should be used. The weight variation in animals or between groups used in a test should not exceed ±20% of the mean weight of each sex.

(C) *Number of animals and sex.* (*1*) At least five experimentally naive animals are used at each concentration and they must be of one sex. After completion of the study in one sex, at least one group of five animals of the other sex is exposed to establish that animals of this sex are not markedly more sensitive to the test substance. The use of fewer animals may be justified in individual circumstances. Where adequate information is available to demonstrate that animals of the sex tested are markedly more sensitive, testing in animals of the other sex is not required. An acceptable option would be to test at least one group of five animals per sex at one or more dose levels to definitively determine the more sensitive sex prior to conducting the main study.

(*2*) Females must be nulliparous and nonpregnant.

(*3*) In acute toxicity tests with animals of a higher order than rodents, the use of fewer animals per concentration group should be considered.

(D) *Assignment of animals.* (*1*) Each animal must be assigned a unique identification number. A system to assign animals to test groups and control groups randomly is required.

(*2*) Control groups. A concurrent untreated control group is not necessary. Where a vehicle other than water is used to generate an appropriate concentration of the test substance in the atmosphere and historical data are not available or adequate to determine the acute toxicity of the vehicle, a vehicle control group must be used. The vehicle control group must be a sham-treated group. Except for treatment with the test substance, animals in the vehicle control group must be handled in a manner identical to the test-group animals.

(E) *Housing.* The animals may be group-caged by sex, but the number of animals per cage must not interfere with clear observation of each animal. The biological properties of the test substance or toxic effects (e.g., morbidity, excitability) may indicate a need for individual caging. Animals must be housed individually in inhalation chambers during exposure to aerosols.

(*1*) Before and after exposure, the temperature of the animal room should be 22 ±3 °C and the relative humidity 30–70%.

(*2*) Where lighting is artificial, the sequence should be 12 hours light/12 hours dark.

(*3*) For feeding, conventional laboratory diets may be used with an unlimited supply of drinking water.

(F) *Inhalation equipment.* (*1*) Animals can be exposed to the substance by either a nose-only procedure or in a

whole-body exposure chamber. Maintenance of slight negative pressure inside the chamber will prevent leakage of the test substance into the surrounding areas. The nose-only exposure procedure is recommended for studies of aerosols to minimize exposures confounding resultant from test substance ingestion due to test animal fur licking following exposures. Animals must be acclimated to the nose-only exposure chamber prior to study and heat stress minimized during testing.

(*2*) *Inhalation chambers.* The animals must be tested in inhalation equipment designed to sustain a dynamic airflow for nose-only exposures of at least 300 ml/minute/animal or an airflow for whole-body exposures of at least 12 to 15 air changes per hour and ensure an adequate oxygen content of at least 19% and an evenly distributed exposure atmosphere. Where a whole-body chamber is used, its design must minimize crowding by providing individual caging. As a general rule, to ensure stability of a chamber atmosphere, the total ''volume'' of the test animals should not exceed 5% of the volume of the test chamber.

(*3*) *Environmental conditions.* The temperature at which the test is performed must be maintained at 22 °C (±2 °C). Ideally, the relative humidity should be maintained between 40% and 60%, but in certain instances (e.g., tests using water as a vehicle), this may not be practical.

(G) *Physical measurements.* Measurements or monitoring must be made of the following:

(*1*) Chemical purity of the test material must be analyzed. If the test substance is present in a mixture, the mass and composition of the entire mixture, as well as the principal compound, must be measured. If there is some difficulty in measuring chamber analytical concentration due to precipitation, nonhomogeneous mixtures, volatile components, or other factors, additional analyses of components may be necessary.

(*2*) The rate of air flow should be monitored continuously, and must be recorded at least every 30 minutes during the exposure period.

(*3*) The actual concentrations of the test substance must be measured in the breathing zone. During the exposure period, the actual concentrations of the test substance must be held as constant as practicable, monitored continuously or intermittently depending on the method of analysis, and recorded at least three times (*i.e.*, at the beginning, at an intermediate time, and at the end) during the exposure period. Chamber concentration may be measured using gravimetric or analytical methods as appropriate. If trial run measurements are reasonably consistent (±10% for liquid aerosol, gas, or vapor; ±20% for dry aerosol), then a minimum of two measurements are sufficient. If measurements are not consistent, then a minimum of four measurements should be taken.

(*4*) During the development of the generating system, particle size analysis must be performed to establish the stability of aerosol concentrations. During exposure, analysis should be conducted as often as necessary to determine the consistency of particle size distribution. The MMAD particle size range should be between 1–4 µm. The particle size of hygroscopic materials must be small enough when dry to assure that the size of the swollen particle will still be within the 1–4 µm MMAD range. Characterization for fibers must include the bivariate distribution of length and diameter; this distribution must ensure inhalability. Measurements of aerodynamic particle size in the animal's breathing zone must be measured during a trial run. If MMAD values for each exposure level are within 10% of each other, then a minimum of two measurements during the exposures should be sufficient. If pretest measurements are not within 10% of each other, then a minimum of four measurements should be taken.

(*5*) Temperature and humidity must be monitored continuously, and must be recorded at least every 30 minutes.

(iii) *Exposure duration and concentration levels.* (A) Exposure duration. Shortly before exposure, the animals are weighed and then exposed to the test target concentration in the designated apparatus for 4 hour exposure period after equilibration of the chamber concentrations. The target concentration is defined by an average of 5% for gases and vapors and 15% for

particles and aerosols. The animals are weighed again at the conclusion of the exposure period to determine body weight change. Other durations may be needed to meet specific requirements. Food must be withheld during exposure. Water may also be withheld in certain circumstances.

(B) *Exposure concentration levels.* At least three concentration levels and a vehicle control group, if required (see paragraph (e)(3)(ii)(D)(*2*) of this section), must be used. The concentration levels should be spaced appropriately to produce a concentration-response curve and permit an estimation of the median lethal concentration (LC_{50}). The concentrations can either be linearly or logarithmically spaced depending on the anticipated steepness of the concentration-response curve. A rationale for concentration selection should be provided to indicate that the selected concentrations will maximally support detection of concentration-response relationship. The high concentration should be clearly toxic or a limit concentration, but should not result in an incidence of fatalities that would preclude a meaningful evaluation of the data. The lowest concentration should define a no-observed-effects level (NOEL). Range-finding studies using single animals may help to estimate the positioning of the test groups so that no more than three concentration levels will be necessary.

(C) When the physical and chemical properties of the test substance show a low flash point or the test substance is otherwise known or thought to be explosive, care must be taken to avoid exposure level concentrations that could result in an exposure chamber explosion during the test.

(iv) *Observation period.* The observation period must be at least 14 days. However, the duration of observation should not be fixed rigidly. It should be determined by the toxic reactions, rate of onset, and length of recovery period, and thus may be extended when considered necessary. The time at which signs of toxicity appear, the duration of the signs observed, and the time of death must be recorded and are important, especially if there is a tendency for delayed effects.

(v) *Observation of animals.* (A) A careful clinical examination must be made at least once each day.

(B) Additional observations should be made daily with appropriate actions taken to minimize loss of animals to the study, e.g., necropsy or refrigeration of those animals found dead and isolation of weak or moribund animals.

(C) Observations must be detailed and carefully recorded, preferably using explicitly defined scales. Observations should include, but not be limited to, evaluation of skin and fur, eyes and mucous membranes, respiratory and circulatory effects, autonomic effects such as salivation, central nervous system effects, including tremors and convulsions, changes in the level of activity, gait and posture, reactivity to handling or sensory stimuli, altered strength, and stereotypies or bizarre behavior (e.g., self mutilation, walking backwards).

(D) Individual weights of animals must be determined pre-exposure and post-exposure, weekly after exposure, and at death. Changes in weights should be calculated and recorded when survival exceeds 1 day.

(E) The time of death should be recorded as precisely as possible.

(vi) *Gross pathology.* (A) At the end of the test, surviving animals must be weighed, sacrificed and a gross necropsy must be performed on all animals under test, with particular reference to any changes in the respiratory tract. All gross pathology changes must be recorded.

(*1*) The gross necropsy must include examination of orifices and the cranial, thoracic, and abdominal cavities, and contents.

(*2*) At least the lungs, liver, kidneys, adrenals, brain, and gonads should be weighed wet, as soon as possible after dissection to avoid drying.

(*3*) Optionally, the following organs and tissues, or representative samples thereof, may be preserved in a suitable medium for possible future histopathological examination: All gross lesions; brain-including sections of medulla/pons; cerebellar cortex and cerebral cortex; pituitary; thyroid/parathyroid; thymus; heart; sternum with bone marrow; salivary glands;

liver; spleen; kidneys; adrenals; pancreas; gonads; accessory genital organs (epididymis, prostrate, and, if present, seminal vesicles); aorta; skin; gall bladder (if present); esophagus; stomach; duodenum; jejunum; ileum; cecum; colon; rectum; urinary bladder; representative lymph nodes; thigh musculature; peripheral nerve; spinal cord at three levels cervical, midthoracic, and lumbar; and eyes. Respiratory tract tissues should be perfusion preserved in a suitable medium.

(B) If necropsy cannot be performed immediately after a dead animal is discovered during the observation period, the animal should be refrigerated (not frozen) at temperatures low enough to minimize autolysis. Necropsies should be performed as soon as possible after death (normally within 24 to 48 hours).

(vii) *Additional evaluations.* In animals surviving 24 hours or more, microscopic examination of organs showing evidence of gross pathology should be considered since it may yield useful information on the nature of acute toxic effects.

(f) *Data and reporting*—(1) *Treatment of results.* Data must be summarized in tabular form showing for each test group the number of animals at the start of the test, body weights, time of death of individual animals at different exposure levels, number of animals displaying other signs of toxicity, description of toxic effects and necropsy findings. The method used for calculation of the LC_{50} or any other parameters must be specified and referenced. Some acceptable methods for parameter estimation are described in the references described in paragraphs (g)(1), (g)(2), and (g)(3) of this section.

(2) *Evaluation of results.* The LC_{50} value should be considered in conjunction with the observed toxic effects and the necropsy findings. The evaluation should include the relationship, if any, between exposure of animals to the test substance and the incidence and severity of all abnormalities including behavioral and clinical abnormalities, gross lesions, body weight changes, mortality, and other toxic effects.

(3) *Test report.* In addition to the reporting requirements specified under EPA Good Laboratory Practice Standards at 40 CFR part 792, subpart J, the following specific information must be reported. The test report shall include:

(i) Test conditions. (A) Description of exposure apparatus including design, type, dimensions.

(B) Source of air, system for generating the test article as particle, aerosol, gas, or vapor.

(C) Method for conditioning air, equipment for measuring temperature, humidity, particle size or particulate aerosol concentration size, and actual concentration.

(D) Treatment of exhaust air and the method of housing the animals in a test chamber when this is used.

(ii) Exposure data. The exposure data must be tabulated and presented with mean values and a measure of variability (e.g., standard deviation) and should include:

(A) Chemical purity of the test material.

(B) Airflow rates through the inhalation equipment.

(C) Temperature and humidity of the air.

(D) Nominal concentration (total amount of test substance fed into the inhalation equipment divided by volume of air).

(E) Actual (analytical or gravimetric) concentration in test breathing zone.

(F) Particle size distribution (calculated MMAD and GSD) and the bivariate distribution of fiber length and diameter, where appropriate.

(G) Explanation as to why the desired chamber concentration and/or particle size could not be achieved (if applicable), and the efforts taken to comply with these aspects of this section.

(iii) Species, strain, sex, and source of test animals.

(iv) Method of randomization in assigning animals to test and control groups.

(v) Rationale for selection of species, if other than that recommended.

(vi) Results. Tabulation of individual and test group data by sex and exposure concentration level (e.g., number of animals exposed, number of animals showing signs of toxicity and number of animals that died or were sacrificed during the test).

(A) Description of toxic effects including time of onset, duration, reversibility, and relationship to the exposure concentration levels.

(B) Pre-exposure and post-exposure body weight change in animals, and weight change during the observation period.

(C) Time of dosing and time of death during or following exposure.

(D) Concentration-response curves for mortality and other toxic effects (when permitted by the method of determination).

(E) Gross pathology necropsy findings in the test animals and vehicle control animals, if included. Data must be tabulated to show the counts and incidence of gross alterations observed for each group tested and the number of animals affected by each type of lesion along with the location and frequency of each type of lesion.

(F) Histopathology findings and any additional evaluations (e.g., clinical chemistry), if performed.

(vii) Description of any pretest conditioning, including diet, quarantine and treatment for disease.

(viii) Description of caging conditions, including: number (or change in number) of animals per cage, bedding material, ambient temperature and humidity, photoperiod, and identification of diet of test animals.

(ix) Manufacturer (source), lot number, and purity of test substance.

(x) Identification and composition of any vehicles (e.g., diluents, suspending agents, and emulsifiers) or other materials , if used in administering the test substance.

(xi) A list of references cited in the body of the report. References to any published literature used in developing the test protocol, performing the testing, making and interpreting observations, and compiling and evaluating the results.

(g) *References.* For additional background information on this test guideline, the following references should be consulted. These references are available for inspection at the TSCA Nonconfidential Information Center, Rm. NE-B607, Environmental Protection Agency, 401 M St., NW., Washington, DC, 12 noon to 4 p.m., Monday through Friday, except legal holidays.

(1) Chanter, D.O. and Heywood, R. The L_{D50} test: some considerations of precision. *Toxicology Letters* 10:303 307 (1982).

(2) Finney, D.G. Chapter 3 Estimation of the median effective dose, Chapter 4 Maximum likelihood estimation. *Probit Analysis.* 3rd Ed. (Cambridge, London. (1971).

(3) Finney, D.J. The Median Lethal Dose and Its Estimation, *Archives of Toxicology* 56:215 218 (1985).

(4) Organization for Economic Cooperation and Development. OECD Guidelines for the Testing of Chemicals. Final Draft OECD Guideline 425: Acute Oral Toxicity: Up-and-Down Procedure to be adopted in the Tenth Addendum to the OECD Guidelines for the Testing of Chemicals.

(5) Organization for Economic Cooperation and Development. OECD Guidelines for Testing of Chemicals. Guideline 403: Acute Inhalation Toxicity. Adopted: May 12, 1981.

(6) Organization for Economic Cooperation and Development. OECD Guidelines for Testing of Chemicals. Guideline 420: Acute Oral Toxicity Fixed Dose Method. Adopted: July 17, 1992.

(7) Organization for Economic Cooperation and Development. OECD Guidelines for Testing of Chemicals. Guideline 423: Acute Oral Toxicity Acute Toxic Class Method. Adopted: March 22, 1996.

(8) U. S. EPA. Interim Policy for Particle Size and Limit Concentration Issues in Inhalation Toxicity Studies. 2/1/94. Health Effects Division, Office of Pesticide Programs.

[65 FR 78776, Dec. 15, 2000]

§ 799.9135 TSCA acute inhalation toxicity with histopathology.

(a) *Scope.* This section is intended to meet the testing requirements under section 4 of the Toxic Substances Control Act (TSCA). In the assessment and evaluation of the potential human health effects of chemical substances, it is appropriate to test for acute inhalation toxic effects. The goals of this test are to characterize the exposure-response relationship for sensitive endpoints following acute exposure and to characterize toxicologic response following acute high exposures. The

latter is of particular concern in relation to spills and other accidental releases. This testing is designed to determine the gross pathology and histopathology resulting from acute inhalation exposure to a substance. Because toxic effects on the respiratory tract are of particular concern following inhalation exposure, several indicators of respiratory toxicity consisting of histopathology on fixed tissue and evaluation of cellular and biochemical parameters in bronchoalveolar lavage fluid should be employed. The respiratory histopathology consists of specialized techniques to preserve tissues of the respiratory tract in order to allow detailed microscopic examination to identify adverse effects of chemical substances on this organ system. The bronchoalveolar lavage is designed to be a rapid screening test to provide an early indicator of pulmonary toxicity by examining biochemical and cytologic endpoints of material from the lungs of animals exposed to potentially toxic chemical substances. These acute tests are designed to assess the relationship, if any, between the animals' exposure to the test substance and to demonstrate relationship between the animals' exposure and the incidence and severity of observed abnormalities, including gross or histopathologic lesions, body weight changes, effects on mortality, and any other toxic effects. These acute tests are not intended to provide a complete evaluation of the toxicologic effects of a substance, and additional functional and morphological evaluations may be necessary to assess completely the potential effects produced by a chemical substance. Additional tests may include longer-term exposures, or more in-depth evaluation of specific organ systems as indicated by signs of toxicity following acute exposure.

(b) *Source.* This a new section developed by the United States Environmental Protection Agency.

(c) *Definitions.* The following definitions apply to this section.

Aerodynamic diameter (d_{ae}) refers to the size of particles. It is the diameter of a sphere of unit density that behaves aerodynamically (has the same settling velocity in air) as the particle of the test substance. It is used to compare particles of different size, shape, and density, and to predict where in the respiratory tract such particles may be primarily deposited.

Exposure response is the relationship between the exposure concentration and the measured toxic response, whether expressed as a group mean ±standard deviation) in the case of a continuous variable or as incidence in the case of a quantal variable. This definiton should not preclude the exploration of other dose metrics in establishing this relationship.

Geometric standard deviation (GSD) is a dimensionless number equal to the ratio between the mass median aerodynamic diameter (MMAD) and either 84% or 16% of the diameter size distribution (e.g., MMAD = 2 μm; 84% = 4 μm; GSD = 4/2 = 2.0.) The MMAD, together with the GSD, describe the particle size distribution of an aerosol. Use of the GSD may not be valid for non-lognormally distributed aerosols. (If the size distribution deviates from the lognormal, it shall be noted).

Inhalability is the ratio of the number concentration of particles of a certain aerodynamic diameter, d_{ae}, that are inspired through the nose or mouth to the number concentration of the same d_{ae} present in the inspired volume of ambient air. In humans, inhalability can exceed 15 μm d_{ae}, whereas inhalability dramatically decreases for particles above 4 μm d_{ae} in small laboratory animals.

Lower respiratory tract consists of those structures of the respiratory tract below the larynx.

Mass geometric mean aerodynamic diameter or the mass median aerodynamic diameter (MMAD) is the calculated aerodynamic diameter that divides the particles of an aerosol (a gaseous suspension of fine liquid or solid particles) in half, based on the weight of the particles. By weight, 50% of the particles will be larger than the MMAD and 50% of the particles will be smaller than the MMAD.

Particle regional deposition is the fraction of inhaled particles that deposits in the specific region of the respiratory tract. The major mechanisms of particle deposition in the respiratory tract

include impaction, sedimentation, diffusion, interception, and electrostatic precipitation. The deposition mechanism that is dominant for a given region depends on the respiratory tract architecture and ventilation rate of the species and the aerosol particle size and distribution. The respiratory tract in both humans and various experimental mammals can be divided into three regions on the basis of structure, size, and function:

(1) The extrathoracic region or upper respiratory tract that includes the nose, mouth, nasopharynx, oropharynx, laryngopharynx, and larynx.

(2) The tracheobronchial region that includes the trachea, bronchi, and bronchioles (including the terminal bronchioles).

(3) The alveolar region that includes the respiratory bronchioles (if present in the species), alveolar ducts, alveolar sacs, and alveoli.

Respiratory effects are any adverse effects on the structure or functions of the respiratory system related to exposure to a chemical substance.

Target organ is any organ found to be a target of toxicity in the 4-hour (hr) high concentration group as a result of:

(1) The initial histopathologic examination (respiratory tract, liver, kidney, gross lesions); or

(2) The retrospective histopathologic examination of archived organs triggered by their identification as targets of toxicity in a 90-day study.

Toxic effects are any adverse changes (a change that is statistically and biologically significant) in the structure or function of an experimental animal as a result of exposure to a chemical substance.

Upper respiratory tract consists of those structures of the respiratory tract above and including the larynx.

(d) *Principle of the test method.* The test substance shall be administered to several groups of experimental animals; one concentration level and duration being used per group. Bronchoalveolar lavage shall be used to evaluate early effects on the respiratory system by examining changes in the content of the lavage fluid of the lung. At 24 hrs following exposure, the animals shall be sacrificed and necropsied, and tissue samples from the respiratory tract and other major organs will be prepared for microscopic examination. The exposure levels at which significant toxic effects on the respiratory organ system are produced are compared to those levels that produce other toxic effects. As triggered by the results of the 4-hr test, additional exposure periods of 1 hr and 8 hrs will be required to determine the effect of exposure time on the toxicity observed. A 1-hr exposure study can be elected as an option to provide data suitable for risk assessment for very short duration exposures as may occur from chemical releases. In the absence of adequate toxicological data for 1-hr exposure, the Agency will extrapolate to shorter-term exposures from the 4-hr data on the basis of concentration alone. This is a conservative method of extrapolation, consistent with general Agency methods for deriving criteria for short-term exposure from longer-term studies (a concentration x time extrapolation would result in higher concentration for a shorter duration).

(e) *Test procedures*—(1) *Animal selection*—(i) *Species.* In general, the laboratory rat and mouse should be used. Under some circumstances, other species, such as the hamster or guinea pig, may be more appropriate, and if these or other species are used, justification should be provided.

(ii) *Strain.* If rats and mice are used, the use of the F344 rat and the B6C3F1 mouse is preferred to facilitate comparison with existing data.

(iii) *Age.* Young adults shall be used. The weight variation of animals used in a test should not exceed ±20% of the mean weight for each species.

(iv) *Sex.* Equal numbers of animals of each sex shall be used for each concentration level. The females shall be nulliparous and nonpregnant.

(v) *Health status.* Body weight and feed consumption are not sufficient indicators of the health status of animals prior to initiating an inhalation toxicity study. Prior to initiating the study, animals shall be monitored for known viral and bacterial respiratory pathogens determined by conventional microbiological assays (e.g., serology). The animals shall be free from pathogens at the start of exposure.

(2) *Number of animals.* At least five males and five females shall be used in each concentration/duration and control group. Animals shall be randomly assigned to treatment and control groups.

(3) *Control groups.* The control group shall be a sham-treated group. Except for treatment with the test substance, animals in the control group shall be handled in a manner identical to the test-group animals. Where a vehicle is used to help generate an appropriate concentration of the substance in the atmosphere, a vehicle control group shall be used. If the 4- and 8-hr exposure studies are conducted concurrently, a concurrent 8-hr sham-exposed control group may serve as the control group for both the 4-hr and the 8-hr exposure studies, provided there is adequate historical control data showing no changes in histopathology or bronchoalveolar lavage of controls exposed for 4 and 8 hrs. Similarly, if the optional 1-hr exposure study is conducted concurrently with the 4- and/or 8-hr study, the concurrent control group for those studies may also be used for the 1-hr study, provided adequate historical control data show no changes in histopathology or bronchoalveolar lavage between controls exposed for these time periods.

(4) *Concentration level and concentration selection.* For the 4-hr study, at least three concentrations shall be used in addition to the control group. Ideally, the data generated from the test should be sufficient to produce an exposure-response curve. The concentrations can either be linearly or logarithmically spaced depending on the anticipated steepness of the concentration-response curve. A rationale for concentration selection should be provided to indicate that the selected concentrations will maximally support detection of concentration-response relationship. The high concentration should be clearly toxic or a limit concentration, but should not result in an incidence of fatalities that would preclude a meaningful evaluation of the data. The lowest concentration should define a no-observed-adverse-effects level (NOAEL).

(i) *Limit concentration.* For aerosols and particles, the high concentrations need not be greater than 2 mg/L, or concentrations that cannot maintain a particle size distribution having an MMAD between 1 and 4 μm (i.e., a particle size that permits inhalability and deposition throughout the respiratory tract). For fibers, the bivariate distribution of length and diameter must ensure inhalability. For gases and vapors, the concentrations need not be greater than 50,000 ppm or 50% of the lower explosive limit, whichever is lower. If a test at an aerosol or particulate exposure of 2 mg/L (actual concentration of respirable substance) for 4 hrs or, where this is not feasible, the maximum attainable concentration, using the procedures described for this study, produces no observable toxic effects, then a full study using three concentrations will not be necessary. Similarly, if a test at a gas or vapor exposure of 50,000 ppm or 50% of the lower explosive limit, whichever is lower, produces no observable toxic effects, then a full study using three concentrations will not be necessary.

(ii) *8-hr study and optional 1-hr study.* If the 8-hr study is triggered, three concentrations shall be tested. These concentrations should allow for the determination of an effect level and a NOAEL. If the option to perform a 1-hr study is elected, three concentrations shall be selected and tested in a similar manner.

(5) *Inhalation exposure.* Animals can be exposed to the substance by either a nose-only procedure or in a whole-body exposure chamber.

(i) *Inhalation chambers.* The animals shall be tested in inhalation equipment designed to sustain a dynamic airflow for nose-only exposures of at least 300 ml/minute/animal or an airflow for whole-body exposures of at least 12 to 15 air changes per hr and ensure an adequate oxygen content of at least 19% and an evenly distributed exposure atmosphere. Where a whole-body chamber is used, its design shall minimize crowding by providing individual caging. As a general rule, to ensure stability of a chamber atmosphere, the total ''volume'' of the test animals should not exceed 5% of the volume of the test chamber.

(ii) *Environmental conditions.* The temperature at which the test is performed shall be maintained at 22 °C (±2 °C). Ideally, the relative humidity should be maintained between 40% and 60%, but in certain instances (e.g., tests using water as a vehicle), this may not be practical.

(iii) *Exposure periodicity.* For acute testing, the exposure design shall enable 4 hrs of exposure to the target concentrations, as defined by an average of ±5% for gases and vapors and ±15% for particles and aerosols. If triggered by the results of the 4-hr exposure, additional testing shall be conducted in a comparable manner using an 8-hr exposure period.

(6) *Physical measurements.* Measurements or monitoring shall be made of the following:

(i) Chemical purity of the test material shall be analyzed.

(ii) The rate of airflow shall be monitored continuously, but shall be recorded at least every 30 minutes.

(iii) The actual concentrations of the test substance shall be measured in the breathing zone. During the exposure period, the actual concentrations of the test substance shall be held as constant as practical, monitored continuously or intermittently depending on the method of analysis, and recorded at least at the beginning, at an intermediate time, and at the end of the exposure period. Well-established and published monitoring methods should be used where available. If no standard methods are available, then accuracy and precision information must be supplied.

(iv) During the development of the generating system, appropriate particle size analysis shall be performed to establish the stability of the aerosol. During exposure, analysis should be conducted as often as necessary to determine the consistency of particle size distribution. The particle size distribution shall have an MMAD between 1 and 4 µm. The particle size of hygroscopic materials shall be small enough when dry to assure that the size of the particle at saturation will still have an MMAD between 1 and 4 µm. Characterization for fibers shall include the bivariate distribution of length and diameter; this distribution must ensure inhalability.

(v) If the test substance is present in a mixture, the mass and composition of the entire mixture, as well as the principal compound, shall be measured.

(vi) Temperature and humidity shall be monitored continuously, but shall be recorded at least every 30 minutes.

(7) *Food and water during exposure period.* Food shall be withheld during exposure. Water may also be withheld in certain cases.

(8) *Observation period.* The bronchoalveolar lavage and respiratory pathology shall be conducted 24 hrs following exposure to allow expression of signs of toxicity. There is concern that some latency time will be required to allow migration of cells and macromolecules into the lungs following exposure, and that some pathology may require macromolecular synthesis or degradation before cell damage develops.

(9) *Gross pathology.* (i) All animals shall be subjected to a full gross necropsy which includes examination of orifices and the cranial, thoracic, and abdominal cavities and their contents.

(ii) At least the lungs, liver, kidneys, adrenals, brain, and gonads shall be weighed wet, as soon as possible after dissection to avoid drying.

(iii) The following organs and tissues, or representative samples thereof, shall be preserved in a suitable medium for possible future histopathological examination: All gross lesions; brain-including sections of medulla/pons; cerebellar cortex and cerebral cortex; pituitary; thyroid/parathyroid; thymus; heart; sternum with bone marrow; salivary glands; liver; spleen; kidneys; adrenals; pancreas; gonads; accessory genital organs (epididymis, prostrate, and, if present, seminal vesicles); aorta; skin; gall bladder (if present); esophagus; stomach; duodenum; jejunum; ileum; cecum; colon; rectum; urinary bladder; representative lymph nodes; thigh musculature; peripheral nerve; spinal cord at three levels cervical, midthoracic, and lumbar; and eyes. Respiratory tract tissues shall also be preserved in a suitable medium.

(10) *Histopathology.* The following histopathology shall be performed:

(i) Full histopathology shall be performed on the respiratory tract, liver and kidney of all animals in the control and high concentration groups. The histopathology of the respiratory tract is described under paragraph (e)(11) of this section.

(ii) All gross lesions which differ from controls in frequency, distribution, type, or severity in all concentration groups.

(iii) Target organs in all animals, as indicated by the observations in the high concentration group in this study. Histopathologic examination of target organs in animals at all concentration levels (rather than only to the extent necessary to define the NOAEL) can support the application of exposure-response analyses such as the benchmark concentration approach.

(iv) Archived organs identified as targets of toxicity from results of the 90-day study (if a 90-day study is required for this substance) should be elevated in high concentration animals of the 4-hr acute study to determine if they are also targets of acute toxicity.

(11) *Respiratory tract histopathology.* (i) Representative sections of the respiratory tract shall be examined histologically. These shall include the trachea, major conducting airways, alveolar region, terminal and respiratory bronchioles (if present), alveolar ducts and sacs, and interstitial tissues.

(ii) Care shall be taken that the method used to kill the animal does not result in damage to the tissues of the upper or lower respiratory tract. The lungs shall be infused with a fixative while in an inflated state of fixed pressure.

(iii) The upper respiratory tract shall be examined for histopathologic lesions. This examination shall use a minimum of four sections located as specified under paragraphs (e)(11)(iii)(A) through (e)(11)(iii)(D) of this section. An evaluation of the nasal vestibule shall be conducted. The method described by the reference under paragraph (h)(11) of this section should be given consideration. The use of additional sections shall be left to the discretion of the study pathologist, but consideration should be given to additional sections as recommended in the reference under paragraph (h)(8) of this section to ensure adequate evaluation of the entire upper respiratory tract, particularly the nasopharyngeal meatus. The following transverse sections shall be examined:

(A) Immediately posterior to the upper incisor teeth.

(B) At the incisor papilla.

(C) At the second palatal ridge.

(D) At the level of the first upper molar teeth.

(iv) The laryngeal mucosa shall be examined for histopathologic changes. Sections of the larynx to be examined include the epithelium covering the base of the epiglottis, the ventral pouch, and the medial surfaces of the vocal processes of the arytenoid cartilages.

(12) *Bronchoalveolar lavage.* (i) Animals can be exposed to the substance by either a nose-only procedure or in a whole-body exposure chamber.

(ii) Care should be taken that the method used to kill the animal results in minimum changes in the fluid of the lungs of the test animals.

(iii) At the appropriate time, the test animals shall be killed and the heart-lung including trachea removed in bloc. Alternatively, lungs can be lavaged in situ. If the study will not be compromised, one lobe of the lungs may be used for lung lavage while the other is fixed for histologic evaluation. The lungs should be lavaged using physiological saline. The lavages shall consist of two washes, each of which consists of approximately 80% (e.g., 5 ml in rats and 1 ml in mice) of the total lung volume. Additional washes merely tend to reduce the concentrations of the material collected. The lung lavage fluid shall be stored on ice at 5 °C until assayed.

(iv) The following parameters shall be determined in the lavage fluid as indicators of cellular damage in the lungs: total protein, cell count, and percent leukocytes. In addition, a phagocytosis assay shall be performed to determine macrophage activity. Assay methods described in the references under paragraphs (h)(1) and (h)(3) of this section may be used.

(13) *Combined protocol.* The tests described may be combined with any other toxicity study, as long as none of

the requirements of either are violated by the combination.

(f) *Triggered testing.* If no adverse effects are seen in the 4-hr study as compared with controls, no further testing is necessary. If the 4-hr study shows positive effects in histopathology or the bronchoalveolar lavage, an 8-hr study shall be conducted. Only those tissues showing positive results in the 4-hr study must be pursued in the follow-up 8-hr study. Similarly, if the option to perform a 1-hr study is exercised, only those tissues showing positive results in the 4-hr study shall be pursued.

(g) *Data reporting and evaluation.* The final test report shall include the following information:

(1) *Description of equipment and test methods.* A description of the general design of the experiment and any equipment used shall be provided.

(i) Description of exposure apparatus, including design, type, dimensions, source of air, system for generating particles, aerosols, gasses, and vapors, method of conditioning air, treatment of exhaust air, and the method of housing animals in a test chamber.

(ii) Description of the equipment for measuring temperature, humidity, and particulate aerosol concentration and size.

(iii) Exposure data shall be tabulated and presented with mean values and measure of variability (e.g., standard deviation) and should include:

(A) Chemical purity of the test material.

(B) Airflow rates through the inhalation equipment.

(C) Temperature and humidity of air.

(D) Nominal concentration (total amount of test substance fed into the inhalation equipment divided by the volume of air).

(E) Actual concentration in test breathing zone.

(F) Particle size distribution (e.g., MMAD with GSD) and the bivariate distribution of fiber length and diameter, where appropriate.

(2) *Results*—(i) *General group animal data.* The following information shall be arranged by test group exposure level.

(A) Number of animals exposed.

(B) Number of animals dying.

(C) Number of animals showing overt signs of toxicity.

(D) Pre- and post-exposure body weight change in animals, and weight change during the observation period.

(ii) *Counts and incidence of gross alterations observed at necropsy in the test and control groups.* Data shall be tabulated to show:

(A) The number of animals used in each group and the number of animals in which any gross lesions were found.

(B) The number of animals affected by each different type of lesion, and the locations and frequency of each type of lesion.

(iii) *Counts and incidence of general histologic alterations in the test group.* Data shall be tabulated to show:

(A) The number of animals used in each group and the number of animals in which any histopathologic lesions were found.

(B) The number of animals affected by each different type of lesion, and the locations, frequency, and average grade of each type of lesion.

(iv) *Counts and incidence of respiratory histopathologic alterations by the test group.* Data shall be tabulated to show:

(A) The number of animals used in each group and the number of animals in which any histopathologic lesions were found.

(B) The number of animals affected by each different type of lesion, and the locations, frequency, and average grade of each type of lesion.

(v) *Results of the bronchoalveolar lavage study.* Data shall be tabulated to show:

(A) The amount of administered lavage fluid and recovered lavage fluid for each test animal.

(B) The magnitude of change of biochemical and cytologic indices in lavage fluids at each test concentration for each animal.

(C) Results shall be quantified as amount of constituent/mL of lavage fluid. This assumes that the amount of lavage fluid recovered is a representative sample of the total lavage fluid.

(3) *Evaluation of data.* The findings from this acute study should be evaluated in the context of preceding and/or concurrent toxicity studies and any correlated functional findings. The

evaluation shall include the relationship between the concentrations of the test substance and the presence or absence, incidence, and severity of any effects. The evaluation should include appropriate statistical analyses, for example, parametric tests for continuous data and non-parametric tests for the remainder. Choice of analyses should consider tests appropriate to the experimental design, including repeated measures. The report must include concentration-response curves for the bronchoalveolar lavage and tables reporting observations at each concentration level for necropsy findings and gross, general, and respiratory system histopathology.

(h) *Reference.* For additional background information on this test guideline, the following references should be consulted. These references are available for inspection at the TSCA Nonconfidential Information Center, Rm. NE-B607, Environmental Protection Agency, 401 M St., SW., Washington, DC, 12 noon to 4 p.m., Monday through Friday, except legal holidays.

(1) Burleson, G.R., Fuller, L.B., Ménache, M.G., and Graham, J.A. Poly (I): poly (C)-enhanced alveolar peritoneal macrophage phagocytosis: Quantification by a new method utilizing fluorescent beads. *Proceedings of the Society of Experimental Biology and Medicine.* 184:468–476 (1987).

(2) Gardner, D.E., Crapo, J.D., and McClellan, R.O. (Eds.) *Toxicology of the Lung.* (Raven Press, New York, 1993) pp. i–xii, 1–30.

(3) Gilmour, G.I., and Selgrade, M.K. A comparison of the pulmonary defenses against streptococcal infection in rats and mice following O3 exposure: Differences in disease susceptibility and neutrophil recruitment. *Toxicology and Applied Pharmacology.* 123:211–218 (1993).

(4) Henderson, R.F., Benson, J.M., Hahn, F.F., Hobbs, C.H., Jones, R.K., Mauderly, J.L., McClellan, R.O., and Pickrell, J.A. New approaches for the evaluation of pulmonary toxicity: Bronchoalveolar lavage fluid analysis. *Fundamental and Applied Toxicology.* 5:451–458 (1985).

(5) Henderson, R.F. Use of bronchoalveolar lavage to detect lung damage. *Environmental Health Perspectives.* 56:115–129 (1984).

(6) Henderson, R.F., Rebar, A.H., Pickrell, J.A., and Newton, G.J. Early damage indicators in the lung. III. Biochemical and cytological response of the lung to inhaled metal salts. *Toxicology and Applied Pharmacology.* 50:123–136 (1979).

(7) McClellan, R.O. and Henderson, R.F. (Eds.) Second edition. *Concepts in Inhalation Toxicology.* (Taylor and Francis, Washington, DC, 1995) pp.i–xxiv, 1–24, 441–470.

(8) Mery, S., Gross, E.A., Joyner, D.R., Godo, M., and Morgan, K.T. Nasal Diagrams: A Tool for Recording the Distribution of Nasal Lesions in Rats and Mice. *Toxicologic Pathology.* 22:353–372 (1994).

(9) Phalen, R.F. (Ed) *Methods in Inhalation Toxicology.* (CRC Press, Boca Raton, FL, 1997) pp. i–xii, 1–12.

(10) Renne, R.A., Gideon, K.M., Miller, R.A., Mellick, P.W., and Grumbein, S.L. Histologic methods and interspecies variations in the laryngeal histology of F344/N rats and B6C3F1 mice. *Toxicology and Pathology.* 20:44–51 (1992).

(11) Young, J.T. Histopathologic examination of the rat nasal cavity. *Fundamental and Applied Toxicology.* 1:309–312 (1981).

§ 799.9305 TSCA Repeated dose 28–day oral toxicity study in rodents.

(a) *Scope*—(1) *Applicability.* This section is intended to meet testing requirements of the Toxic Substances Control Act (TSCA) (15 U.S.C. 2601).

(2) *Source.* The source material used in developing this TSCA test guideline is the Office of Prevention, Pesticides and Toxic Substances (OPPTS) harmonized test guideline 870.3050 (July 2000, final guidelines). This source is available at the address in paragraph (h) of this section.

(b) *Purpose.* (1) In the assessment and evaluation of the toxic characteristics of a chemical, the determination of oral toxicity using repeated doses may be carried out after initial information on toxicity has been obtained by acute testing. This study provides information on the possible health hazards likely to arise from repeated exposure over a relatively limited period of time. The method comprises the basic

repeated dose toxicity study that may be used for chemicals on which a 90–day study is not warranted (*e.g.*, when the production volume does not exceed certain limits) or as a preliminary to a long term study. The duration of exposure should normally be 28 days although a 14–day study may be appropriate in certain circumstances; justification for use of a 14–day exposure period should be provided.

(2) This section places emphasis on neurological effects as a specific endpoint, and the need for careful clinical observations of the animals, so as to obtain as much information as possible, is stressed. The method should identify chemicals with neurotoxic potential, which may warrant further in-depth investigation of this aspect. In addition, the method may give an indication of immunological effects and reproductive organ toxicity.

(c) *Definitions.* The definitions in section 3 of TSCA and in 40 CFR Part 792—Good Laboratory Practice Standards apply to this section. The following definitions also apply to this section.

Dosage is a general term comprising of dose, its frequency and the duration of dosing.

Dose is the amount of test substance administered. Dose is expressed as weight (g, mg) or as weight of test substance per unit weight of test animal (e.g., mg/kg), or as constant dietary concentrations (parts per million (ppm)).

No-observed-effects level (NOEL) is the maximum dose used in a study which produces no adverse effects. The NOEL is usually expressed in terms of the weight of a test substance given daily per unit weight of test animals (milligrams per kilograms per day).

(d) *Principle of the test.* The test substance is orally administered daily in graduated doses to several groups of experimental animals, one dose level per group for a period of 28 days. During the period of administration the animals are observed closely, each day for signs of toxicity. Animals which die or are sacrificed during the test are necropsied and at the conclusion of the test surviving animals are sacrificed and necropsied.

(e) *Description of the method*—(1) *Selection of animal species.* The preferred rodent species is the rat, although other rodent species may be used. Commonly used laboratory strains of young healthy adult animals should be employed. The females should be nulliparous and non-pregnant. Dosing should begin as soon as possible after weaning and, in any case, before the animals are 9 weeks old. At the commencement of the study the weight variation of animals used should be minimal and not exceed ±20% of the mean weight of each sex. Where a repeated dose oral study is conducted as a preliminary to a long term study, preferably animals from the same strain and source should be used in both studies.

(2) *Housing and feeding conditions.* The temperature in the experimental animal room should be 22 °C (±3 °C). Although the relative humidity should be at least 30% and preferably not to exceed 70% other than during room cleaning, the aim should be 50–60%. Lighting should be artificial, the sequence being 12 hours light, 12 hours dark. For feeding, conventional laboratory diets may be used with an unlimited supply of drinking water. The choice of diet may be influenced by the need to ensure a suitable admixture of a test substance when administered by this method. Animals may be housed individually, or be caged in small groups of the same sex; for group caging, no more than five animals should be housed per cage.

(3) *Preparation of animals.* Healthy young adult animals must be randomly assigned to the control and treatment groups. Cages should be arranged in such a way that possible effects due to cage placement are minimized. The animals are identified uniquely and kept in their cages for at least 5 days prior to the start of the study to allow for acclimatization to the laboratory conditions.

(4) *Preparation of doses.* (i) The test compound must be administered by gavage or via the diet or drinking water. The method of oral administration is dependent on the purpose of the study, and the physical/chemical properties of the test material.

(ii) Where necessary, the test substance is dissolved or suspended in a suitable vehicle. It is recommended that, wherever possible, the use of an

aqueous solution/suspension be considered first, followed by consideration of a solution/emulsion in oil (e.g., corn oil) and then by possible solution in other vehicles. For vehicles other than water the toxic characteristics of the vehicle must be known. The stability of the test substance in the vehicle should be determined.

(f) *Procedure*—(1)*Number and sex of animals.* At least 10 animals (five female and five male) should be used at each dose level. If interim sacrifices are planned, the number should be increased by the number of animals scheduled to be sacrificed before the completion of the study. Consideration should be given to an additional satellite group of 10 animals (five per sex) in the control and in the top dose group for observation of reversibility, persistence, or delayed occurrence of toxic effects, for at least 14 days post treatment.

(2) *Dosage.* (i) Generally, at least three test groups and a control group should be used, but if from assessment of other data, no effects would be expected at a dose of 1000 mg/kg bodyweight/per day, a limit test may be performed. If there are no suitable data available, a range finding study may be performed to aid the determination of the doses to be used. Except for treatment with the test substance, animals in the control group should be handled in an identical manner to the test group subjects. If a vehicle is used in administering the test substance, the control group should receive the vehicle in the highest volume used.

(ii) Dose levels should be selected taking into account any existing toxicity and (toxico-) kinetic data available for the test compound or related materials. The highest dose level should be chosen with the aim of inducing toxic effects but not death or severe suffering. Thereafter, a descending sequence of dose levels should be selected with a view to demonstrating any dosage related response and NOEL at the lowest dose level. Two to four fold intervals are frequently optimal for setting the descending dose levels and addition of a fourth test group is often preferable to using very large intervals (e.g., more than a factor of 10) between dosages.

(3) *Limit test.* If a test at one dose level of at least 1000 mg/kg body weight/day or, for dietary or drinking water administration, an equivalent percentage in the diet, or drinking water (based upon body weight determinations), using the procedures described for this study, produces no observable toxic effects and if toxicity would not be expected based upon data from structurally related compounds, then a full study using three dose levels may not be considered necessary. The limit test applies except when human exposure indicates the need for a higher dose level to be used.

(4) *Administration of doses.* (i) The animals are dosed with the test substance daily 7 days each week for a period of 28 days; use of a 5–day per week dosing regime or a 14–day exposure period needs to be justified. When the test substance is administered by gavage, this should be done in a single dose to the animals using a stomach tube or a suitable intubation cannula. The maximum volume of liquid that can be administered at one time depends on the size of the test animal. The volume should not exceed 1ml/100g body weight, except in the case of aqueous solutions where 2ml/100g body weight may be used. Except for irritating or corrosive substances which will normally reveal exacerbated effects with higher concentrations, variability in test volume should be minimized by adjusting the concentration to ensure a constant volume at all dose levels.

(ii) For substances administered via the diet or drinking water it is important to ensure that the quantities of the test substance involved do not interfere with normal nutrition or water balance. When the test substance is administered in the diet either a constant dietary concentration (parts per million (ppm)) or a constant dose level in terms of the animals' body weight may be used; the alternative used must be specified. For a substance administered by gavage, the dose should be given at similar times each day, and adjusted as necessary to maintain a constant dose level in terms of animal body weight. Where a repeated dose study is used as a preliminary to a long term study, a similar diet should be used in both studies.

(5) *Observations.* (i) The observation period should be 28 days, unless the study duration is 14 days (see paragraph (b)(1) of this section). Animals in a satellite group scheduled for follow-up observations should be kept for at least a further 14 days without treatment to detect delayed occurrence, or persistence of, or recovery from toxic effects.

(ii) General clinical observations should be made at least once a day, preferably at the same time(s) each day and considering the peak period of anticipated effects after dosing. The health condition of the animals should be recorded. At least twice daily, all animals are observed for morbidity and mortality.

(iii) Once before the first exposure (to allow for within-subject comparisons), and at least once a week thereafter, detailed clinical observations should be made in all animals. These observations should be made outside the home cage in a standard arena and preferably at the same time, each time. They should be carefully recorded, preferably using scoring systems, explicitly defined by the testing laboratory. Effort should be made to ensure that variations in the test conditions are minimal and that observations are preferably conducted by observers unaware of the treatment. Signs noted should include, but not be limited to, changes in skin, fur, eyes, mucous membranes, occurrence of secretions and excretions and autonomic activity (e.g., lacrimation, piloerection, pupil size, unusual respiratory pattern). Changes in gait, posture and response to handling as well as the presence of clonic or tonic movements, stereotypies (e.g., excessive grooming, repetitive circling) or bizarre behaviour (e.g., self-mutilation, walking backwards) should also be recorded.

(iv) In the fourth exposure week sensory reactivity to stimuli of different types (see paragraph (h)(2) of this section) (e.g., auditory, visual and proprioceptive stimuli), assessment of grip strength and motor activity assessment should be conducted. Further details of the procedures that could be followed are given in the respective references. However, alternative procedures than those referenced could also be used. Examples of procedures for observation are described in the references in paragraphs (h)(1), (h)(2), (h)(3), (h)(4), and (h)(5) of this section.

(v) Functional observations conducted in the fourth exposure week may be omitted when the study is conducted as a preliminary study to a subsequent subchronic (90–day) study. In that case, the functional observations should be included in this follow-up study. On the other hand, the availability of data on functional observations from the repeated dose study may enhance the ability to select dose levels for a subsequent subchronic study.

(vi) Exceptionally, functional observations may also be omitted for groups that otherwise reveal signs of toxicity to an extent that would significantly interfere with the functional test performance.

(6) *Body weight and food/water consumption.* All animals should be weighed at least once a week. Measurements of food consumption should be made at least weekly. If the test substance is administered via the drinking water, water consumption should also be measured at least weekly.

(7) *Hematology.* (i) The following hematological examinations should be made at the end of the test period: hematocrit, hemoglobin concentration, erythrocyte count, total and differential leukocyte count, platelet count and a measure of blood clotting time/potential.

(ii) Blood samples should be taken from a named site just prior to or as part of the procedure for sacrificing the animals, and stored under appropriate conditions.

(8) *Clinical Biochemistry.* (i) Clinical biochemistry determinations to investigate major toxic effects in tissues and, specifically, effects on kidney and liver, should be performed on blood samples obtained of all animals just prior to or as part of the procedure for sacrificing the animals (apart from those found moribund and/or intercurrently sacrificed). Overnight fasting of the animals prior to blood sampling is

recommended.[1] Investigations of plasma or serum shall include sodium, potassium, glucose, total cholesterol, urea, creatinine, total protein and albumin, at least two enzymes indicative of hepatocellular effects (such as alanine aminotransferase, aspartate aminotransferase, alkaline phosphatase, gamma glutamyl transpeptidase, and sorbitol dehydrogenase). Measurements of additional enzymes (of hepatic or other origin) and bile acids may provide useful information under certain circumstances.

(ii) Optionally, the following urinalysis determinations could be performed during the last week of the study using timed urine volume collection; appearance, volume, osmolality or specific gravity, pH, protein, glucose and blood and blood cells.

(iii) In addition, studies to investigate serum markers of general tissue damage should be considered. Other determinations that should be carried out if the known properties of the test substance may, or are suspected to, affect related metabolic profiles include calcium, phosphate, fasting triglycerides, specific hormones, methemoglobin and cholinesterase. These must to be identified for chemicals in certain classes or on a case-by-case basis.

(iv) Overall, there is a need for a flexible approach, depending on the species and the observed and/or expected effect with a given compound.

(v) If historical baseline data are inadequate, consideration should be given to determination of hematological and clinical biochemistry variables before dosing commences.

[1] For a number of measurements in serum and plasma, most notably for glucose, overnight fasting would be preferable. The major reason for this preference is that the increased variability which would inevitably result from non-fasting, would tend to mask more subtle effects and make interpretation difficult. On the other hand, however, overnight fasting may interfere with the general metabolism of the animals and, particularly in feeding studies, may disturb the daily exposure to the test substance. If overnight fasting is adopted, clinical biochemical determinations should be performed after the conduct of functional observations in week 4 of the study.

(9) *Pathology*—(i)*Gross necropsy*. (A) All animals in the study must be subjected to a full, detailed gross necropsy which includes careful examination of the external surface of the body, all orifices, and the cranial, thoracic and abdominal cavities and their contents. The liver, kidneys, adrenals, testes, epididymides, thymus, spleen, brain and heart of all animals (apart from those found moribund and/or intercurrently sacrificed) should be trimmed of any adherent tissue, as appropriate, and their wet weight taken as soon as possible after dissection to avoid drying.

(B) The following tissues should be preserved in the most appropriate fixation medium for both the type of tissue and the intended subsequent histopathological examination: all gross lesions, brain (representative regions including cerebrum, cerebellum and pons), spinal cord, stomach, small and large intestines (including Peyer's patches), liver, kidneys, adrenals, spleen, heart, thymus, thyroid, trachea and lungs (preserved by inflation with fixative and then immersion), ovaries, uterus, testes, epididymides, accessory sex organs (e.g., prostate, seminal vesicles), urinary bladder, lymph nodes (preferably one lymph node covering the route of administration and another one distant from the route of administration to cover systemic effects), peripheral nerve (sciatic or tibial) preferably in close proximity to the muscle, and a section of bone marrow (or, alternatively, a fresh mounted bone marrow aspirate). The clinical and other findings may suggest the need to examine additional tissues. Also any organs considered likely to be target organs based on the known properties of the test substance should be preserved.

(ii) *Histopathology*. (A) Full histopathology should be carried out on the preserved organs and tissues of all animals in the control and high dose groups. These examinations should be extended to animals of all other dosage groups, if treatment-related changes are observed in the high dose group.

(B) All gross lesions must be examined.

(C) When a satellite group is used, histopathology should be performed on tissues and organs identified as showing effects in the treated groups.

(g) *Data and reporting*—(1) *Data.* (i) Individual data should be provided. Additionally, all data should be summarized in tabular form showing for each test group the number of animals at the start of the test, the number of animals found dead during the test or sacrificed for humane reasons and the time of any death or humane sacrifice, the number showing signs of toxicity, a description of the signs of toxicity observed, including time of onset, duration, and severity of any toxic effects, the number of animals showing lesions, the type of lesions and the percentage of animals displaying each type of lesion.

(ii) When possible, numerical results should be evaluated by an appropriate and generally acceptable statistical method. The statistical methods should be selected during the design of the study.

(2) *Test report.* The test report must include the following information:

(i) Test substance:

(A) Physical nature, purity and physicochemical properties.

(B) Identification data.

(ii) Vehicle (if appropriate): Justification for choice of vehicle, if other than water.

(iii) Test animals:

(A) Species/strain used.

(B) Number, age and sex of animals.

(C) Source, housing conditions, diet, etc.

(D) Individual weights of animals at the start of the test.

(iv) Test conditions:

(A) Rationale for dose level selection.

(B) Details of test substance formulation/diet preparation, achieved concentration, stability and homogeneity of the preparation.

(C) Details of the administration of the test substance.

(D) Conversion from diet/drinking water test substance concentration (parts per million (ppm)) to the actual dose (mg/kg body weight/day), if applicable.

(E) Details of food and water quality.

(v) Results:

(A) Body weight/body weight changes.

(B) Food consumption, and water consumption, if applicable.

(C) Toxic response data by sex and dose level, including signs of toxicity.

(D) Nature, severity and duration of clinical observations (whether reversible or not).

(E) Sensory activity, grip strength and motor activity assessments.

(F) Hematological tests with relevant base-line values.

(G) Clinical biochemistry tests with relevant base-line values.

(H) Body weight at sacrificing and organ weight data.

(I) Necropsy findings.

(J) A detailed description of all histopathological findings.

(K) Absorption data if available.

(L) Statistical treatment of results, where appropriate.

(vi) Discussion of results.

(vii) Conclusions.

(h) *References.* For additional background information on this test guideline, the following references should be consulted. These references are available for inspection at the TSCA Nonconfidential Information Center, Rm. NE-B607, Environmental Protection Agency, 401 M St., SW., Washington, DC, 12 noon to 4 p.m., Monday through Friday, except legal holidays.

(1) Tupper, D.E., Wallace, R.B. (1980). Utility of the Neurologic Examination in Rats. *Acta Neurobiological Exposure,* 40:999–1003.

(2) Gad, S.C. (1982). A Neuromuscular Screen for Use in Industrial Toxicology. *Journal of Toxicology and Environmental Health,* 9:691–704.

(3) Moser, V.C., McDaniel, K.M., Phillips, P.M. (1991). Rat Strain and Stock Comparisons Using a Functional Observational Battery: Baseline Values and Effects of Amitraz. *Toxicology and Applied Pharmacology,* 108:267–283.

(4) Meyer O.A., Tilson H.A., Byrd W.C., Riley M.T. (1979). A Method forthe Routine Assessment of Fore- and Hindlimb Grip Strength of Rats and Mice. *Neurobehavioral Toxicology,* 1:233–236.

(5) Crofton K.M., Howard J.L., Moser V.C., Gill M.W., Reiter L.W., Tilson

H.A., MacPhail R.C. (1991). Interlaboratory Comparison of Motor Activity Experiments: Implication for Neurotoxicological Assessments. *Neurotoxicology and Teratology*, 13:599–609.

[65 FR 78780, Dec. 15, 2000]

§ 799.9310 TSCA 90-day oral toxicity in rodents.

(a) *Scope.* This section is intended to meet the testing requirements under section 4 of the Toxic Substances Control Act (TSCA). In the assessment and evaluation of the toxic characteristics of a chemical, the determination of subchronic oral toxicity may be carried out after initial information on toxicity has been obtained by acute testing. The subchronic oral study has been designed to permit the determination of the no-observed-effects level (NOEL) and toxic effects associated with continuous or repeated exposure to a test substance for a period of 90 days. This study is not capable of determining those effects that have a long latency period for development (e.g., carcinogenicity and life shortening). Extrapolation from the results of this study to humans is valid only to a limited degree. However, it can useful in providing information on health hazards likely to arise from repeated exposure by the oral route over a limited period of time, such as target organs, the possibilities of accumulation, and can be of use in selecting dose levels for chronic studies and for establishing safety criteria for human exposure.

(b) *Source.* The source material used in developing this TSCA test guideline is the Office of Prevention, Pesticides, and Toxic Substances (OPPTS) harmonized test guideline 870.3100 (August 1998, final guideline). This source is available at the address in paragraph (h) of this section.

(c) *Definitions.* The following definitions apply to this section.

Cumulative toxicity is the adverse effects of repeated doses occurring as a result of prolonged action on, or increased concentration of, the administered test substance or its metabolites in susceptible tissue.

Dose in a subchronic oral study is the amount of test substance administered daily via the oral route (gavage, drinking water or diet) for a period of 90 days. Dose is expressed as weight of the test substance (grams, milligrams) per unit body weight of test animal (milligram per kilogram) or as weight of the test substance in parts per million in food or drinking water per day.

No-observed-effects level (NOEL) is the maximum dose used in a study which produces no adverse effects. The NOEL is usually expressed in terms of the weight of a test substance given daily per unit weight of test animal (milligrams per kilogram per day).

Subchronic oral toxicity is the adverse effects occurring as a result of the repeated daily exposure of experimental animals to a chemical by the oral route for a part (approximately 10%) of the test animal's life span.

Target organ is any organ of a test animal showing evidence of an effect induced by a test substance.

(d) *Limit test.* If a test at one dose level of at least 1,000 mg/kg body weight (expected human exposure may indicate the need for a higher dose level), using the procedures described for this study, produces no observable toxic effects or if toxic effects would not be expected based upon data of structurally related compounds, then a full study using three dose levels might not be necessary.

(e) *Test procedures*—(1) *Animal selection*—(i) *Species and strain.* A variety of rodent species may be used, although the rat is the preferred species. Commonly used laboratory strains must be employed.

(ii) *Age/weight.* (A) Testing should be started with young healthy animals as soon as possible after weaning and acclimatization.

(B) Dosing of rodents should generally begin no later than 8–9 weeks of age.

(C) At the commencement of the study the weight variation of animals used must be within 20% of the mean weight for each sex.

(iii) *Sex.* Equal numbers of animals of each sex must be used at each dose level, and the females shall be nulliparous and nonpregnant.

(iv) *Numbers.* (A) At least 20 rodents (10 males and 10 females) at each dose level.

(B) If interim sacrifices are planned, the number must be increased by the number of animals scheduled to be sacrificed before the completion of the study.

(C) To avoid bias, the use of adequate randomization procedures for the proper allocation of animals to test and control groups is required.

(D) Each animal must be assigned a unique identification number. Dead animals, their preserved organs and tissues, and microscopic slides must be identified by reference to the animal's unique number.

(v) *Husbandry.* (A) Animals may be group-caged by sex, but the number of animals per cage must not interfere with clear observation of each animal. The biological properties of the test substance or toxic effects (e.g., morbidity, excitability) may indicate a need for individual caging.

(B) The temperature of the experimental animal rooms should be at 22 ±3 °C.

(C) The relative humidity of the experimental animal rooms should be 50 ±20%.

(D) Where lighting is artificial, the sequence should be 12 hours light/12 hours dark.

(E) Control and test animals must be fed from the same batch and lot. The feed should be analyzed to assure adequacy of nutritional requirements of the species tested and for impurities that might influence the outcome of the test. For feeding, conventional laboratory diets may be used with an unlimited supply of drinking water.

(F) The study should not be initiated until animals have been allowed a period of acclimatization/quarantine to environmental conditions, nor should animals from outside sources be placed on test without an adequate period of quarantine. An acclimation period of at least five days is recommended.

(2) *Control and test substances.* (i) Where necessary, the test substance is dissolved or suspended in a suitable vehicle. If a vehicle or diluent is needed, the vehicle should not elicit toxic effects or substantially alter the chemical or toxicological properties of the test substance. It is recommended that wherever possible the usage of an aqueous solution be considered first, followed by consideration of a solution in oil and then solution in other vehicles.

(ii) If possible, one lot of the test substance tested should be used throughout the duration of the study and the research sample should be stored under conditions that maintain its purity and stability. Prior to the initiation of the study, there should be a characterization of the test substance, including the purity of the test compound and, if technically feasible, the names and quantities of contaminants and impurities.

(iii) If the test or control substance is to be incorporated into feed or another vehicle, the period during which the test substance is stable in such a mixture should be determined prior to the initiation of the study. Its homogeneity and concentration should be determined prior to the initiation of the study and periodically during the study. Statistically randomized samples of the mixture should be analyzed to ensure that proper mixing, formulation, and storage procedures are being followed, and that the appropriate concentration of the test or control substance is contained in the mixture.

(3) *Control groups.* A concurrent control group is required. This group must be an untreated or sham-treated control group or, if a vehicle is used in administering the test substance, a vehicle control group. If the toxic properties of the vehicle are not known or cannot be made available, both untreated and vehicle control groups are required.

(4) *Satellite group.* A satellite group of 20 animals (10 animals per sex) may be treated with the high dose level for 90 days and observed for reversibility, persistence, or delayed occurrence of toxic effects for a post-treatment period of appropriate length, normally not less than 28 days. In addition, a control group of 20 animals (10 animals of each sex) should be added to the satellite study.

(5) *Dose levels and dose selection.* (i) In subchronic toxicity tests, it is desirable to determine a dose-response relationship as well as a NOEL. Therefore, at least three dose levels plus a control and, where appropriate, a vehicle control (corresponding to the concentration of vehicle at the highest dose

level) must be used. Doses should be spaced appropriately to produce test groups with a range of toxic effects. The data should be sufficient to produce a dose-response curve.

(ii) The highest dose level should result in toxic effects but not produce an incidence of fatalities which would prevent a meaningful evaluation.

(iii) The intermediate dose levels should be spaced to produce a gradation of toxic effects.

(iv) The lowest dose level should produce no evidence of toxicity.

(6) *Administration of the test substance.* (i) If the test substance is administered by gavage, the animals are dosed with the test substance on a 7–day per week basis for a period of at least 90 days. However, based primarily on practical considerations, dosing by gavage on a 5–day per week basis is acceptable. If the test substance is administered in the drinking water, or mixed in the diet, then exposure should be on a 7–day per week basis.

(ii) All animals must be dosed by the same method during the entire experimental period.

(iii) For substances of low toxicity, it is important to ensure that when administered in the diet the quantities of the test substance involved do not interfere with normal nutrition. When the test substance is administered in the diet, either a constant dietary concentration (parts per million) or a constant dose level in terms of body weight should be used; the alternative used should be specified.

(iv) For a substance administered by gavage, the dose should be given at approximately the same time each day, and adjusted at intervals (weekly or biweekly) to maintain a constant dose level in terms of body weight.

(7) *Observation period.* (i) The animals must be observed for a period of 90 days.

(ii) Animals in the satellite group (if used) scheduled for follow-up observations should be kept for at least 28 days further without treatment to detect recovery from, or persistence of, toxic effects.

(8) *Observation of animals.* (i) Observations must be made at least twice each day for morbidity and mortality. Appropriate actions should be taken to minimize loss of animals to the study (e.g., necropsy or refrigeration of those animals found dead and isolation or sacrifice of weak or moribund animals). General clinical observations should be made at least once a day, preferably at the same time each day, taking into consideration the peak period of anticipated effects after dosing. The clinical condition of the animal should be recorded.

(ii) A careful clinical examination must be made at least once weekly. Observations should be detailed and carefully recorded, preferably using explicity defined scales. Observations should include, but not be limited to, evaluation of skin and fur, eyes and mucous membranes, respiratory and circulatory effects, autonomic effects such as salivation, central nervous system effects, including tremors and convulsions, changes in the level of activity, gait and posture, reactivity to handling or sensory stimuli, altered strength, and stereotypes or bizarre behavior (e.g., self-mutilation, walking backwards).

(iii) Signs of toxicity should be recorded as they are observed including the time of onset, degree and duration.

(iv) Measurements of food consumption and water consumption, if drinking water is the exposure route, must be made weekly.

(v) Individual weights of animals must be determined shortly before the test substance is administered, weekly thereafter, and at death.

(vi) Moribund animals should be removed and sacrificed when noticed and the time of death should be recorded as precisely as possible.

(vii) At termination, all survivors in the treatment and control groups must be sacrificed.

(9) *Clinical pathology.* Hematology and clinical chemistry examinations must be made on all animals, including controls, of each sex in each group. The hematology and clinical chemistry parameters should be examined at terminal sacrifice at the end of the study. Overnight fasting of the animals prior to blood sampling is recommended. Overall, there is a need for a flexible approach in the measures examined, depending on the observed or expected

effects from a chemical, and in the frequency of measures, depending on the duration of potential chemical exposures.

(i) *Hematology*. The recommended parameters are red blood cell count, hemoglobin concentration, hematocrit, mean corpuscular volume, mean corpuscular hemoglobin, and mean corpuscular hemoglobin concentration, white blood cell count, differential leukocyte count, platelet count, and a measure of clotting potential, such as prothrombin time or activated partial thromboplastin time.

(ii) *Clinical chemistry*. (A) Parameters which are considered appropriate to all studies are electrolyte balance, carbohydrate metabolism, and liver and kidney function. The selection of specific tests will be influenced by observations on the mode of action of the substance and signs of clinical toxicity.

(B) The recommended clinical chemistry determinations are potassium, sodium, glucose, total cholesterol, urea nitrogen, creatinine, total protein and albumin. More than 2 hepatic enzymes, (such as alanine aminotransferase, aspartate aminotransferase, alkaline phosphatase, sorbitol dehydrogenase, or gamma glutamyl transpeptidase) should also be measured. Measurements of addtional enzymes (of hepatic or other origin) and bile acids, may also be useful.

(C) If a test chemical has an effect on the hematopoietic system, reticulocyte counts and bone marrow cytology may be indicated.

(D) Other determinations that should be carried out if the test chemical is known or suspected of affecting related measures include calcium, phosphorus, fasting triglycerides, hormones, methemoglobin, and cholinesterases.

(iii) Optionally, the following urinalysis determinations could be performed during the last week of the study using timed urine volume collection: appearance, volume, osmolality or specific gravity, pH, protein, glucose and blood/blood cells.

(10) *Ophthalmological examination*. Ophthalmological examinations using an ophthalmoscope or an equivalent device must be made on all animals prior to the administration of the test substance and on all high dose and control groups at termination. If changes in the eyes are detected, all animals in the other dose groups must be examined.

(11) *Gross necropsy*. (i) All animals must be subjected to a full gross necropsy which includes examination of the external surface of the body, all orifices, and the cranial, thoracic and abdominal cavities and their contents.

(ii) The liver, kidneys, adrenals, testes, epididymides, ovaries, uterus, thymus, spleen, brain, and heart must be trimmed and weighed wet, as soon as possible after dissection.

(iii) The following organs and tissues, or representative samples thereof, should be preserved in a suitable medium for possible future histopathological examination:

(A) Digestive system—salivary glands, esophagus, stomach, duodenum, jejunum, ileum, cecum, colon, rectum, liver, pancreas, gallbladder (when present).

(B) Nervous system—brain (including sections of medulla/pons, cerebellum and cerebrum), pituitary, peripheral nerve (sciatic or tibial, preferably in close proximity to the muscle), spinal cord (three levels: cervical, mid-thoracic and lumbar), eyes (retina, optic nerve).

(C) Glandular system—adrenals, parathyroid, thyroid.

(D) Respiratory system—trachea, lungs, pharynx, larynx, nose.

(E) Cardiovascular/hemopoietic system—aorta, heart, bone marrow (and/or fresh aspirate), lymph nodes (preferably one lymph node covering the route of administration and another one distant from the route of administration to cover systemic effects), spleen, thymus.

(F) Urogenital system—kidneys, urinary bladder, prostate, testes, epididymides, seminal vesicle(s), uterus, ovaries, female mammary gland.

(G) Others—all gross lesions and masses, skin.

(12) *Histopathology*. (i) The following histopathology must be performed:

(A) Full histopathology on the organs and tissues, listed in paragraph (e)(11)(iii) of this section, of all rodents in the control and high dose groups, and all rodents that died or were sacrificed during the study.

(B) All gross lesions in all animals.

(C) Target tissues in all animals.

(D) When a satellite group is used, histopathology should be performed on tissues and organs identified as showing effects in the treated groups.

(ii) If excessive early deaths or other problems occur in the high dose group compromising the significance of the data, the next dose level should be examined for complete histopathology.

(iii) An attempt should be made to correlate gross observations with microscopic findings.

(iv) Tissues and organs designated for microscopic examination should be fixed in 10% buffered formalin or a recognized suitable fixative as soon as necropsy is performed and no less than 48 hours prior to trimming.

(f) *Data and reporting*—(1) *Treatment of results.* (i) Data must be summarized in tabular form, showing for each test group the number of animals at the start of the test, the number of animals showing lesions, the types of lesions and the percentage of animals displaying each type of lesion.

(ii) When applicable, all observed results, qualitative and quantitative, should be evaluated by an appropriate and generally accepted statistical method. Any generally accepted statistical methods may be used; the statistical methods, including significance criteria, should be selected during the design of the study.

(2) *Evaluation of study results.* The findings of a subchronic oral toxicity study should be evaluated in conjunction with the findings of preceding studies and considered in terms of the toxic effects and the necropsy and histopathological findings. The evaluation must include the relationship between the dose of the test substance and the presence or absence, the incidence and severity, of abnormalities, including behavioral and clinical abnormalities, gross lesions, identified target organs, body weight changes, effects on mortality and any other general or specific toxic effects. A properly conducted subchronic test should provide a satisfactory estimation of a NOEL. It also can indicate the need for an additional longer-term study and provide information on the selection of dose levels.

(3) *Test report.* In addition to reporting requirements specified under EPA Good Laboratory Practice Standards at 40 CFR part 792, subpart J, the following specific information must be reported:

(i) Test substance characterization should include:

(A) Chemical identification.

(B) Lot or batch number.

(C) Physical properties.

(D) Purity/impurities.

(ii) Identification and composition of any vehicle used.

(iii) Test system should contain data on:

(A) Species and strain of animals used and rationale for selection if other than that recommended.

(B) Age including body weight data and sex.

(C) Test environment including cage conditions, ambient temperature, humidity, and light/dark periods.

(D) Identification of animal diet.

(E) Acclimation period.

(iv) Test procedure should include the following data:

(A) Method of randomization used.

(B) Full description of experimental design and procedure.

(C) Dose regimen including levels, methods, and volume.

(v) Test results should include:

(A) Group animal data. Tabulation of toxic response data by species, strain, sex and exposure level for:

(*1*) Number of animals exposed.

(*2*) Number of animals showing signs of toxicity.

(*3*) Number of animals dying.

(B) Individual animal data. Data should be presented as summary (group mean) as well as for individual animals.

(*1*) Date of death during the study or whether animals survived to termination.

(*2*) Date of observation of each abnormal sign and its subsequent course.

(*3*) Body weight data.

(*4*) Feed and water (if collected) consumption data.

(5) Achieved dose (mg/kg/day) as a time-weighted average if the test substance is administered in the diet or drinking water.

(*6*) Results of ophthalmological examination.

(*7*) Results of hematological tests performed.

(*8*) Results of clinical chemistry tests performed.

(*9*) Results of urinalysis, if performed.

(*10*) Necropsy findings, including absolute and relative (to body weight) organ weight data.

(*11*) Detailed description of all histopathological findings.

(*12*) Statistical treatment of results, where appropriate.

(g) *Quality control.* A system must be developed and maintained to assure and document adequate performance of laboratory equipment. The study must be conducted in compliance with 40 CFR Part 792—Good Laboratory Practice Standards.

(h) *References.* For additional background information on this test guideline, the following references should be consulted. These references are available for inspection at the TSCA Nonconfidential Information Center, Rm. NE-B607, Environmental Protection Agency, 401 M St., NW., Washington, DC, 12 noon to 4 p.m., Monday through Friday, except legal holidays.

(1) Boyd, E.M. Chapter 14. Pilot Studies, 15. Uniposal Clinical Parameters, 16. Uniposal Autopsy Parameters. Predictive Toxicometrics. Williams and Wilkins, Baltimore (1972).

(2) Fitzhugh, O.G. *Subacute Toxicity, Appraisal of the Safety of Chemicals in Foods, Drugs and Cosmetics.* The Association of Food and Drug Officials of the United States (1959, 3rd Printing 1975) pp. 26–35.

(3) Organization for Economic Cooperation and Development. OECD uidelines for Testing of Chemicals. Guideline 408: Subchronic Oral Toxicity-Rodent: 90-day Study, Adopted: May 12, 1981.

(4) Weingand K., Brown G., Hall R. et al. Harmonization of Animal Clinical Pathology Testing in Toxicity and Safety Studies. *Fundam. & Appl. Toxicol.* 29:198-201. (1996)

[65 FR 78783, Dec. 15, 2000]

§ 799.9325 TSCA 90-day dermal toxicity.

(a) *Scope.* This section is intended to meet the testing requirements under section 4 of the Toxic Substances Control Act (TSCA). In the assessment and evaluation of the toxic characteristics of a chemical, the determination of subchronic dermal toxicity may be carried out after initial information on toxicity has been obtained by acute testing. The subchronic dermal study has been designed to permit the determination of the no-observed-effects level (NOEL) and toxic effects associated with continuous or repeated exposure to a test substance for a period of 90 days. This study is not capable of determining those effects that have a long latency period for development (e.g., carcinogenicity and life shortening). Extrapolation from the results of this study to humans is valid only to a limited degree. It can, however, provide useful information on the degree of percutaneous absorption, target organs, the possibilities of accumulation, and can be of use in selecting dose levels for chronic studies and for establishing safety criteria for human exposure.

(b) *Source.* The source material used in developing this TSCA test guideline is the Office of Prevention, Pesticides, and Toxic Substances (OPPTS) harmonized test guideline 870.3250 (August 1998, final guideline). This source is available at the address in paragraph (h) of this section.

(c) *Definitions.* The following definitions also apply to this section.

Cumulative toxicity is the adverse effect of repeated doses occurring as a result of prolonged action or increased concentration of the administered test substance or its metabolites in susceptible tissues.

Dose in a subchronic dermal study is the amount of test substance applied daily to the skin for 90 days. Dose is expressed as weight of the test substance (grams, milligrams), per unit body weight of test animal (milligrams per kilogram), or as weight of the test substance per unit of surface area (milligrams per square centimeter) per day.

No-observed-effects level (NOEL) is the maximum dose used in a study which produces no adverse effects. The NOEL is expressed in terms of the weight of a test substance given daily per unit weight of test animal (milligrams per kilogram per day).

Subchronic dermal toxicity is the adverse effects occurring as a result of the repeated daily exposure of experimental animals to a chemical by the dermal route for a part of the test animal's life span.

Target organ is any organ of a test animal showing evidence of an effect induced by a test substance.

(d) *Limit test.* If a test at one dose level of at least 1,000 mg/kg body weight (expected human exposure may indicate the need for a higher dose level), using the procedures described for this section, produces no observable toxic effects or if toxic effects would not be expected based upon data on structurally related compounds, a full study using three dose levels might not be necessary.

(e) *Test procedures*—(1) *Animal selection*—(i) *Species and strain.* A mammalian species must be used for testing. The rat, rabbit, or guinea pig may be used. Commonly used laboratory strains must be employed. If other mammalian species are used, the tester must provide justification/reasoning for their selection. When a subchronic dermal study is conducted as a preliminary to a chronic dermal study, the same species and strain must be used in both studies.

(ii) *Age/weight.* (A) Testing should be started with young healthy animals as soon as possible after weaning and acclimatization.

(B) Dosing should generally begin in guinea pigs between 5–6 weeks of age, in rats between 8–9 weeks of age, and in rabbits at least 12 weeks old.

(C) At the commencement of the study, the weight variation of animals used must be within 20% of the mean weight for each sex.

(iii) *Sex.* Equal numbers of animals of each sex with healthy skin must be used at each dose level. The females shall be nulliparous and nonpregnant except for specially designed studies.

(iv) *Numbers.* (A) At least 20 animals (10 animals per sex) must be used at each dose level.

(B) If interim sacrifices are planned, the number must be increased by the number of animals scheduled to be sacrificed before completion of the study.

(C) To avoid bias, the use of adequate randomization procedures for the proper allocation of animals to test and control groups is required.

(D) Each animal must be assigned a unique identification number. Dead animals, their preserved organs and tissues, and microscopic slides must be identified by reference to the animal's unique number.

(v) *Husbandry.* (A) Animals should be housed in individual cages.

(B) The temperature of the experimental animal rooms should be at 22 ±3 °C

(C) The relative humidity of the experimental animal rooms should be 50 ±20%.

(D) Where lighting is artificial, the sequence should be 12 hours light/12 hours dark.

(E) Control and test animals must be fed from the same batch and lot. The feed should be analyzed to assure adequacy of nutritional requirements of the species tested and for impurities that might influence the outcome of the test. For feeding, conventional laboratory diets may be used with an unlimited supply of drinking water.

(F) The study should not be initiated until animals have been allowed a period of acclimatization/quarantine to environmental conditions, nor should animals from outside sources be placed on test without an adequate period of quarantine. An acclimation period of at least five days is recommended.

(2) *Control and test substances.* (i) Where necessary, the test substance is dissolved or suspended in a suitable vehicle. If a vehicle or diluent is needed, the vehicle should not elicit toxic effects or substantially alter the chemical or toxicological properties of the test substance. It is recommended that, whenever possible, the usage of an aqueous solution be considered first, followed by consideration of a solution of oil and then solution of other vehicles.

(ii) One lot of the test substance should be used, if possible, throughout the duration of the study, and the research sample should be stored under conditions that maintain its purity and stability. Prior to the initiation of the study, there should be a characterization of the test substance, including the purity of the test compound and if technically feasible, the name and

quantities of unknown contaminants and impurities.

(iii) If the test substance is dissolved or suspended in a vehicle, the period during which the test substance is stable in such a mixture should be determined prior to the initiation of the study. Its homogeneity and concentration should be determined prior to the initiation of the study and periodically during the study. Statistically randomized samples of the mixture should be analyzed to ensure that proper mixing, formulation, and storage procedures are being followed, and that the appropriate concentration of the test or control substance is contained in the mixture.

(3) *Control groups.* A concurrent control group is required. This group must be an untreated or sham-treated control group or, if a vehicle is used in the application of the test substance, a vehicle control group. If the toxic properties of the vehicle are not known or not available, both untreated/sham-treated and vehicle control groups are required.

(4) *Satellite group.* A satellite group of 20 animals (10 animals per sex) may be treated with the high dose level for 90 days and observed for reversibility, persistence, or delayed occurrence of toxic effects for a post-treatment period of appropriate length, normally not less than 28 days. In addition a control group of 20 animals (10 animals per sex) should be added to the satellite study.

(5) *Dose levels and dose selection.* (i) In subchronic toxicity tests, it is desirable to determine a dose-response relationship as well as a NOEL. Therefore, at least three dose levels plus a control and, where appropriate, a vehicle control (corresponding to the concentration of vehicle at the highest dose level) group shall be used. Doses should be spaced appropriately to produce test groups with a range of toxic effects. The data should be sufficient to produce a dose-response curve.

(ii) The highest dose level should elicit signs of toxicity but not produce severe skin irritation or an incidence of fatality which would prevent a meaningful evaluation. If application of the test substance produces severe skin irritation, the concentration may be reduced, although this may result in a reduction in, or absence of, other toxic effects at the high dose level. If the skin has been badly damaged early in the study, it may be necessary to terminate the study and undertake a new one at lower concentrations.

(iii) The intermediate dose levels should be spaced to produce a gradation of toxic effects.

(iv) The lowest dose level should not produce any evidence of toxic effects.

(6) *Preparation of animal skin.* Shortly before testing, fur must be clipped from not less than 10% of the body surface area for application of the test substance. In order to dose approximately 10% of the body surface, the area starting at the scapulae (shoulders) to the wing of the ileum (hipbone) and half way down the flank on each side of the animal should be shaved. Shaving should be carried out approximately 24 hours before dosing. Repeated clipping or shaving is usually needed at approximately weekly intervals. When clipping or shaving the fur, care should be taken to avoid abrading the skin which could alter its permeability.

(7) *Preparation of test substance.* (i) Liquid test substances are generally used undiluted, except as indicated in paragraph (e)(5)(ii) of this section.

(ii) Solids should be pulverized when possible. The substance should be moistened sufficiently with water or, when necessary, a suitable vehicle to ensure good contact with the skin. When a vehicle is used, the influence of the vehicle on toxicity of, and penetration of the skin by, the test substance should be taken into account.

(iii) The volume of application should be kept constant, e.g., less than 300 μL for the rat; different concentrations of test solution shall be prepared for different dose levels.

(8) *Administration of test substance.* (i) The duration of exposure should be at least for 90 days.

(ii) Ideally, the animals should be treated with test substance for at least 6 hours per day on a 7-day per week basis. However, based on practical considerations, application on a 5-day per week basis is acceptable. Dosing should be conducted at approximately the same time each day.

(iii) The test substance must be applied uniformly over the treatment site.

(iv) The surface area covered may be less for highly toxic substances. As much of the area should be covered with as thin and uniform a film as possible.

(v) During the exposure period, the test substance must be held in contact with the skin with a porous gauze dressing (less than or equal to 8 ply). The test site must be further covered with nonirritating tape to retain the gauze dressing and the test substance and to ensure that the animals cannot ingest the test substance. Restrainers may be used to prevent the ingestion of the test substance, but complete immobilization is not recommended. The test substance may be wiped from the skin after the six-hour exposure period to prevent ingestion.

(9) *Observation of animals.* (i) Observations must be made at least twice each day for morbidity and mortality. Appropriate actions should be taken to minimize loss of animals to the study (e.g., necropsy or refrigeration of those animals found dead and isolation or sacrifice of weak or moribund animals). General clinical observations must be made at least once a day, preferably at the same time each day, taking into consideration the peak period of anticipated effects after dosing. The clinical condition of the animal should be recorded.

(ii) A careful clinical examination must be made at least once weekly. Observations should be detailed and carefully recorded, preferably using explicity defined scales. Observations should include, but not be limited to, evaluation of skin and fur, eyes and mucous membranes, respiratory and circulatory effects, autonomic effects such as salivation, central nervous system effects, including tremors and convulsions, changes in the level of activity, gait and posture, reactivity to handling or sensory stimuli, altered strength, and stereotypes or bizarre behavior (e.g., self-mutilation, walking backwards).

(iii) Signs of toxicity should be recorded as they are observed including the time of onset, degree and duration.

(iv) Individual weights of animals must be determined shortly before the test substance is administered, weekly thereafter, and at death.

(v) Food consumption must also be determined weekly if abnormal body weight changes are observed.

(vi) Moribund animals should be removed and sacrificed when noticed and the time of death should be recorded as precisely as possible.

(vii) At termination, all survivors in the control and treatment groups must be sacrificed.

(10) *Clinical pathology.* Hematology and clinical chemistry examinations must be made on all animals, including controls, of each sex in each group. The hematology and clinical chemistry parameters should be examined at terminal sacrifice at the end of the study. Overnight fasting of the animals prior to blood sampling is recommended. Overall, there is a need for a flexible approach in the measures examined, depending on the observed or expected effects from a chemical, and in the frequency of measures, depending on the duration of potential chemical exposures.

(i) *Hematology.* The recommended parameters are red blood cell count, hemoglobin concentration, hematocrit, mean corpuscular volume, mean corpuscular hemoglobin, and mean corpuscular hemoglobin concentration, white blood cell count, differential leukocyte count, platelet count, and a measure of clotting potential, such as prothrombin time or activated partial thromboplastin time.

(ii) *Clinical chemistry.* (A) Parameters which are considered appropriate to all studies are electrolyte balance, carbohydrate metabolism, and liver and kidney function. The selection of specific tests will be influenced by observations on the mode of action of the substance and signs of clinical toxicity.

(B) The recommended clinical chemistry determinations are potassium, sodium, glucose, total cholesterol, urea nitrogen, creatinine, total protein and albumin. More than 2 hepatic enzymes, (such as alanine aminotransferase, aspartate aminotransferase, alkaline phosphatase, sorbitol dehydrogenase, or gamma glutamyl transpeptidase)

should also be measured. Measurements of additional enzymes (of hepatic or other origin) and bile acids, may also be useful.

(C) If a test chemical has an effect on the hematopoietic system, reticulocyte counts and bone marrow cytology may be indicated.

(D) Other determinations that should be carried out if the test chemical is known or suspected of affecting related measures include calcium, phosphorus, fasting triglycerides, hormones, methemoglobin, and cholinesterases.

(iii) Optionally, the following urinalysis determinations could be performed during the last week of the study using timed urine volume collection: appearance, volume, osmolality or specific gravity, pH, protein, glucose and blood/blood cells.

(11) *Ophthalmological examination*. Using an ophthalmoscope or an equivalent device, ophthalmological examinations must be made on all animals prior to the administration of the test substance and on all high dose and control groups at termination. If changes in the eyes are detected, all animals in the other dose groups must be examined.

(12) *Gross necropsy*. (i) All animals must be subjected to a full gross necropsy which includes examination of the external surface of the body, all orifices, and the cranial, thoracic and abdominal cavities and their contents.

(ii) The liver, brain, kidneys, spleen, adrenals, testes, epididymides, uterus, ovaries, thymus and heart must be trimmed and weighed wet, as soon as possible after dissection.

(iii) The following organs and tissues, or representative samples thereof, must be preserved in a suitable medium for possible future histopathological examination:

(A) Digestive system—salivary glands, esophagus, stomach, duodenum, jejunum, ileum, cecum, colon, rectum, liver, pancreas, gallbladder (when present).

(B) Nervous system—brain (multiple sections, including cerebrum, cerebellum and medulla/pons), pituitary, peripheral nerve (sciatic or tibial, preferably in close proximity to the muscle), spinal cord (three levels, cervical, mid-thoracic and lumbar), eyes (retina, optic nerve).

(C) Glandular system—adrenals, parathyroid, thyroid.

(D) Respiratory system—trachea, lungs, pharynx, larynx, nose.

(E) Cardiovascular/Hematopoietic system—aorta, heart, bone marrow (and/or fresh aspirate), lymph nodes (preferably one lymph node covering the route of administration and another one distant from the route of administration to cover systemic effects), spleen, thymus.

(F) Urogenital system—kidneys, urinary bladder, prostate, testes, epididymides, seminal vesicle(s), uterus, ovaries, female mammary gland.

(G) Other—all gross lesions and masses, skin (both treated and adjacent untreated areas).

(13) *Histopathology*. (i) The following histopathology must be performed:

(A) Full histopathology on the organs and tissues, listed in paragraph (e)(12)(iii) of this section, of all animals in the control and high dose groups and all animals that died or were sacrificed during the study.

(B) All gross lesions in all animals.

(C) Target organs in all animals.

(D) When a satellite group is used, histopathology must be performed on tissues and organs identified as showing toxic effects in the treated groups.

(ii) If excessive early deaths or other problems occur in the high dose group compromising the significance of the data, the next dose level must be examined for complete histopathology.

(iii) An attempt should be made to correlate gross observations with microscopic findings.

(iv) Tissues and organs designated for microscopic examination should be fixed in 10% buffered formalin or a recognized suitable fixative as soon as necropsy is performed and no less than 48 hours prior to trimming.

(f) *Data and reporting*—(1) *Treatment of results*. (i) Data must be summarized in tabular form, showing for each test group, number of animals at the start of the test, the number of animals showing lesions, the types of lesions and the percentage of animals displaying each type of lesion.

(ii) When applicable, all observed results, qualitative and quantitative,

should be evaluated by an appropriate and generally acceptable statistical method. Any generally accepted statistical method should be used; the statistical methods including significance criteria should be selected during the design of the study.

(2) *Evaluation of study results.* The findings of a subchronic dermal toxicity study should be evaluated in conjunction with the findings of preceding studies and considered in terms of toxic effects and the necropsy and histopathological findings. The evaluation should include the relationship between the dose of the test substance, the incidence and severity of abnormalities including behavioral and clinical abnormalities, gross lesions, identified target organs, body weight changes, effect on mortality, and any other general or specific toxic effects. A properly conducted 90-day subchronic dermal study should provide information on the effects of repeated application of a substance and a satisfactory estimation of a NOEL. It also can indicate the need for an additional longer-term study and provide information on the selection of dose levels.

(3) *Test report.* In addition to reporting requirements specified under EPA Good Laboratory Practice Standards at 40 CFR part 792, subpart J, the following specific information must be reported:

(i) Test substance characterization should include:

(A) Chemical identification.

(B) Lot or batch numbers.

(C) Physical properties.

(D) Purity/impurities.

(ii) Identification and composition of any vehicle if used.

(iii) Test system should contain data on:

(A) Species and strain of animals used and rationale for selection if other than that recommended.

(B) Age including body weight data and sex.

(C) Test environment including cage conditions, ambient temperature, humidity, and light/dark periods.

(D) Identification of animal diet.

(E) Acclimation period.

(iv) Test procedure should include the following data:

(A) Method of randomization used.

(B) Full description of experimental design and procedure.

(C) Dose regime including levels, method, and volume.

(v) Test results should include:

(A) Group animal data. Tabulation of toxic response data by species, strain, sex and exposure level for:

(*1*) Number of animals exposed.

(*2*) Number of animals showing signs of toxicity.

(*3*) Number of animals dying.

(B) Individual animal data. Data should be presented as summary (group mean) as well as for individual animals.

(*1*) Date of death during the study or whether animals survived to termination.

(*2*) Date of observation of each abnormal sign and its subsequent course.

(*3*) Body weight data.

(*4*) Feed consumption data, when collected.

(*5*) Results of ophthalmological examination.

(*6*) Results of hematological tests performed.

(*7*) Results of clinical chemistry tests performed.

(*8*) Results of urinalysis, when performed.

(*9*) Results of observations made.

(*10*) Necropsy findings, including absolute and relative (to body weight) organ weight data.

(*11*) Detailed description of all histopathological findings.

(*12*) Statistical treatment of results, where appropriate.

(g) *Quality control.* A system must be developed and maintained to assure and document adequate performance of laboratory equipment. The study must be conducted in compliance with the Good Laboratory Practice (GLP) regulations.

(h) *References.* For additional background information on this test guideline, the following references should be consulted. These references are available for inspection at the TSCA Nonconfidential Information Center, Rm. NE-B607, Environmental Protection Agency, 401 M St., NW., Washington, DC, 12 noon to 4 p.m., Monday through Friday, except legal holidays.

(1) Organization for Economic Cooperation and Development. Guidelines

for Testing of Chemicals, Section 4-Health Effects, Part 411 Subchronic Toxicity Studies, Paris, 1981.

(2) Weingand K, Brown G, Hall R et al. (1996). Harmonization of Animal Clinical Pathology Testing in Toxicity and Safety Studies. *Fundam. & Appl. Toxicol.* 29:198-201.

[65 FR 78786, Dec. 15, 2000]

§ 799.9346 TSCA 90-day inhalation toxicity.

(a) *Scope.* This section is intended to meet the testing requirements under section 4 of TSCA. In the assessment and evaluation of the toxic characteristics of a gas, volatile substance, or aerosol/particulate, determination of subchronic inhalation toxicity may be carried out after initial information on toxicity has been obtained by acute testing. The subchronic inhalation study has been designed to permit the determination of the no-observed-effect-level (NOEL) and toxic effects associated with continuous or repeated exposure to a test substance for a period of 90 days. This study is not capable of determining those effects that have a long latency period for development (e.g., carcinogenicity and life shortening). Extrapolation from the results of this study to humans is valid only to a limited degree. It can, however, provide useful information on health hazards likely to arise from repeated exposures by the inhalation route over a limited period of time. It will provide information on target organs and the possibilities of accumulation, and can be of use in selecting concentration levels for chronic studies and establishing safety criteria for human exposure. Hazards of inhaled substances are influenced by the inherent toxicity and by physical factors such as volatility and particle size.

(b) *Source.* The source material used in developing this TSCA test guideline is the OPPTS harmonized test guideline 870.3465 (June 1996 Public Draft). This source is available at the address in paragraph (h) of this section.

(c) *Definitions.* The following definitions apply to this section.

Aerodynamic equivalent diameter is defined as the diameter of a unit density sphere having the same terminal settling velocity as the particle in question, whatever its size, shape, and density. It is used to predict where in the respiratory tract such particles may be deposited.

Concentration in a subchronic inhalation study is the amount of test substance administered via inhalation for a period of 90-days. Concentration is expressed as weight of the test substance per unit volume of air (milligrams per liter or parts per million).

Cumulative toxicity is the adverse effects of repeated exposures occurring as a result of prolonged action on, or increased concentration of the administered test substance or its metabolites in susceptible tissues.

Inhalable diameter refers to that aerodynamic diameter of a particle which is considered to be inhalable for the organism. It is used to refer to particles which are capable of being inhaled and may be deposited anywhere within the respiratory tract

Mass median aerodynamic diameter (MMAD) is the median aerodynamic diameter and along with the geometric standard deviation (GSD) is used to describe the particle size distribution of any aerosol statistically based on the weight and size of the particles. Fifty percent of the particles by weight will be smaller than the median diameter and 50% of the particles will be larger.

No-observed-effect-level (NOEL) is the maximum concentration used in a study which produces no adverse effects.

Subchronic inhalation toxicity is the adverse effects occurring as a result of the repeated daily exposure of experimental animals to a chemical by inhalation for part (approximately 10%) of a life span.

(d) *Limit test.* If exposure at a concentration of 1 mg/L (expected human exposure may indicate the need for a higher concentration), or where this is not possible due to physical or chemical properties of the test substance, the maximum attainable concentration produces no observable toxic effects, then a full study using three concentrations might not be necessary.

(e) *Test procedures*—(1) *Animal selection*—(i) *Species and strain.* A mammalian species shall be used for testing. A variety of rodent species may be used,

although the rat is the preferred species. Commonly used laboratory strains should be employed. If another mammalian species is used, the tester shall provide justification/reasoning for its selection.

(ii) *Age/weight.* Testing should be started with young healthy animals as soon as possible after weaning and acclimatization.

(B) Dosing of rodents should generally begin no later than 8 weeks of age.

(C) At the commencement of the study the weight variation of animals used shall not exceed ±20% of the mean weight for each sex.

(iii) *Sex.* (A) Equal numbers of animals of each sex shall be used at each concentration.

(B) Females shall be nulliparous and nonpregnant.

(iv) *Numbers.* (A) At least 20 animals (10 females and 10 males) should be used for each test group.

(B) If interim sacrifices are planned, the number of animals shall be increased by the number of animals scheduled to be sacrificed before the completion of the study.

(C) To avoid bias, the use of adequate randomization procedures for the proper allocation of animals to test and control groups is required.

(D) Each animal shall be assigned a unique identification number. Dead animals, their preserved organs and tissues, and microscopic slides shall be identified by reference to the animal's unique number.

(v) *Husbandry.* (A) Animals may be group-caged by sex, but the number of animals per cage must not interfere with clear observation of each animal. The biological properties of the test substance or toxic effects (e.g., morbidity, excitability) may indicate a need for individual caging. Animals must be housed individually in inhalation chambers during exposure to aerosols.

(B) The temperature of the experimental animal rooms should be at 22 ±3 °C.

(C) The relative humidity of the experimental animal rooms should be 30–70%.

(D) Where lighting is artificial, the sequence should be 12 h light/12 h dark.

(E) Control and test animals should be fed from the same batch and lot. The feed should be analyzed to assure adequacy of nutritional requirements of the species tested and for impurities that might influence the outcome of the rest. For feeding, conventional laboratory diets may be used with an unlimited supply of drinking water.

(F) The study should not be initiated until animals have been allowed a period of acclimatization/quarantine to environmental conditions, nor should animals from outside sources be placed on test without an adequate period of quarantine. An acclimatization period of at least 5 days is recommended.

(2) *Control and test substances.* (i) Whenever it is necessary to formulate the test substance with a vehicle for aerosol generation, the vehicle ideally should not elicit toxic effects or substantially alter the chemical or toxicological properties of the test substance.

(ii) One lot of the test substance should be used, if possible throughout the duration of the study, and the research sample should be stored under conditions that maintain its purity and stability. Prior to the initiation of the study, there should be a characterization of the test substance, including the purity of the test substance and, if technically feasible, the name and quantities of unknown contaminants and impurities.

(3) *Control groups.* A concurrent control group is required. This group shall be an untreated or sham-treated control group. Except for treatment with the test substance, animals in the control group shall be handled in a manner identical to the test group animals. Where a vehicle other than water is used to generate a substance, a vehicle control group should be used. If the toxic properties of the vehicle are not known or cannot be made available, both untreated and vehicle control groups are required.

(4) *Satellite group.* A satellite group of 20 animals (10 animals per sex) may be treated with the high concentration level for 90 days and observed for reversibility, persistence, or delayed occurrence of toxic effects for a post-treatment period of appropriate length,

normally not less than 28 days. In addition, a control group of 20 animals (10 animals of each sex) should be added to the satellite study.

(5) *Concentration levels and concentration selection.* (i) In subchronic toxicity tests, it is desirable to have a concentration-response relationship as well as a NOEL. Therefore, at least three concentration levels plus a control and, where appropriate, a vehicle control (corresponding to the concentration of vehicle at the highest exposure level) shall be used. Concentrations should be spaced appropriately to produce test groups with a range of toxic effects. The data should be sufficient to produce a concentration-response curve.

(ii) The highest concentration should result in toxic effects but not produce an incidence of fatalities which would prevent a meaningful evaluation.

(iii) The intermediate concentrations should be spaced to produce a gradation of toxic effects.

(iv) The lowest concentration should produce no evidence of toxicity.

(v) In the case of potentially explosive test substances, care should be taken to avoid generating explosive concentrations.

(6) *Administration of the test substance.* Animals should be exposed to the test substance for 6 h per day on a 7-day per week basis for a period of at least 90 days. Based primarily on practical considerations, exposure for 6 h per day on a 5–day per week basis is acceptable.

(7) *Observation period.* The animals should be observed for a period of 90 days. Animals in the satellite group (if used) scheduled for follow-up observations should be kept for at least 28 days further without treatment to assess reversibility.

(8) *Exposure specifications.* (i) The animals shall be tested in dynamic inhalation equipment designed to sustain a minimum airflow of 10 air changes per hr, an adequate oxygen content of at least 19%, and uniform conditions throughout the exposure chamber. Maintenance of slight negative pressure inside the chamber will prevent leakage of the test substance into the surrounding areas. It is not normally necessary to measure chamber oxygen concentration if airflow is adequate.

(ii) The selection of a dynamic inhalation chamber should be appropriate for the test substance and test system. Where a whole body chamber is used to expose animals to an aerosol, individual housing must be used to minimize crowding of the test animals and maximize their exposure to the test substance. To ensure stability of a chamber atmosphere, the total volume occupied by the test animals shall not exceed 5% of the volume of the test chamber. It is recommended, but not required, that nose-only or head-only exposure be used for aerosol studies in order to minimize oral exposures due to animals licking compound off their fur. Heat stress should be minimized.

(iii) The temperature at which the test is performed should be maintained at 22±2 °C. The relative humidity should be maintained between 40 and 60%, but in certain instances (e.g., use of water vehicle) this may not be practicable.

(9) *Physical measurements.* Measurements or monitoring shall be made of the following:

(i) The rate of airflow shall be monitored continuously but recorded at least three times during the exposure.

(ii) The actual concentrations of the test substance shall be measured in the animal's breathing zone. During the exposure period, the actual concentrations of the test substance shall be held as constant as practicable and monitored continuously or intermittently depending on the method of analysis. Chamber concentration may be measured using gravimetric or analytical methods as appropriate. If trial run measurements are reasonably consistent ±10% for liquid, aerosol, gas, or vapor; ±20% for dry aerosol), then two measurements should be sufficient. If measurements are not consistent, three to four measurements should be taken. Whenever the test substance is a formulation, or it is necessary to formulate the test substance with a vehicle for aerosol generation, the analytical concentration must be reported for the total formulation, and not just for the active ingredient (AI). If, for example, a formulation contains 10% AI and 90% inerts, a chamber analytical limit concentration of 2 mg/L would consist

of 0.2 mg/L of the AI. It is not necessary to analyze inert ingredients provided the mixture at the animal's breathing zone is analogous to the formulation; the grounds for this conclusion must be provided in the study report. If there is some difficulty in measuring chamber analytical concentration due to precipitation, nonhomogeneous mixtures, volatile components, or other factors, additional analyses of inert components may be necessary.

(iii) During the development of the generating system, particle size analysis shall be performed to establish the stability of aerosol concentrations with respect to particle size. The MMAD particle size range should be between 1–3 µm. The particle size of hygroscopic materials should be small enough when dry to assure that the size of the swollen particle will still be within the 1–3 µm range. Measurements of aerodynamic particle size in the animal's breathing zone should be measured during a trial run. If MMAD valves for each exposure level are within 10% of each other, then two measurements during the exposures should be sufficient. If pretest measurements are not within 10% of each other, three to four measurements should be taken.

(iv) Temperature and humidity shall be monitored continuously and recorded at least three times during an exposure.

(10) *Feed and water during exposure period.* Feed shall be withheld during exposure. Water may also be withheld during exposure.

(11) *Observation of animals.* (i) During and following exposure, observations are made and recorded systematically; individual records should be maintained for each animal. It is not always possible to observe animals during exposure in a whole-body chamber.

(ii) Observations shall be made at least once each day for morbidity and mortality. Appropriate actions should be taken to minimize loss of animals to the study (e.g., Necropsy or refrigeration of those animals found dead and isolation or sacrifice of weak or moribund animals).

(iii) A careful clinical examination shall be made at least once weekly. Observations should be detailed and carefully recorded, preferably using explicitly defined scales. Observations should include, but not be limited to, evaluation of skin and fur, eyes and mucous membranes, respiratory and circulatory effects, autonomic effects such as salivation, central nervous system effects, including tremors and convulsions, changes in the level of activity, gait and posture, reactivity to handling or sensory stimuli, altered strength, and stereotypes or bizarre behavior (e.g., self-mutilation, walking backwards).

(iv) Signs of toxicity should be recorded as they are observed including the time of onset, degree and duration.

(v) Individual weights of animals shall be determined shortly before the test substance is administered, and weekly thereafter.

(vi) Food consumption shall also be determined weekly if abnormal body weight changes are observed.

(vii) Moribund animals should be removed and sacrificed when noticed and the time of death should be recorded as precisely as possible.

(viii) At termination, all survivors in the treatment groups shall be sacrificed.

(12) *Clinical pathology.* Hematology and clinical chemistry examinations shall be made on all animals, including controls, of each sex in each group. The hematology and clinical chemistry parameters should be examined at terminal sacrifice at the end of the study. Overnight fasting of the animals prior to blood sampling is recommended. Overall, there is a need for a flexible approach in the measures examined, depending on the observed or expected effects from a chemical, and in the frequency of measures, depending on the duration of potential chemical exposures.

(i) Hematology. The recommended parameters are red blood cell count, hemoglobin concentration, hematocrit, mean corpuscular volume, mean corpuscular hemoglobin, and mean corpuscular hemoglobin concentration, white blood cell count, differential leukocyte count, platelet count, and a measure of clotting potential, such as prothrombin time or activated partial thromboplastin time.

(ii) Clinical chemistry. (A) Parameters which are considered appropriate to all studies are electrolyte balance, carbohydrate metabolism, and liver and kidney function. The selection of specific tests will be influenced by observations on the mode of action of the substance and signs of clinical toxicity.

(B) The recommended clinical chemistry determinations are potassium, sodium, glucose, total cholesterol, urea nitrogen, creatinine, total protein and albumin. More than 2 hepatic enzymes, (such as alanine aminotransferase, aspartate aminotransferase, alkaline phosphatase, sorbitol dehydrogenase, or gamma glutamyl transpeptidase) should also be measured. Measurements of addtional enzymes (of hepatic or other origin) and bile acids, may also be useful.

(C) If a test chemical has an effect on the hematopoietic system, reticulocyte counts and bone marrow cytology may be indicated.

(D) Other determinations that should be carried out if the test chemical is known or suspected of affecting related measures include calcium, phosphorus, fasting triglycerides, hormones, methemoglobin, and cholinesterases.

(iii) Optionally, the following urinalysis determinations could be performed during the last week of the study using timed urine volume collection: appearance, volume, osmolality or specific gravity, pH, protein, glucose, and blood/blood cells.

(13) *Ophthalmological examination*. Ophthalmological examinations shall be made on all animals prior to the administration of the test substance and on all high concentration and control groups at termination. If changes in the eyes are detected, all animals in the other concentration groups shall be examined.

(14) *Gross pathology*. (i) All animals shall be subjected to a full gross necropsy which includes examination of the external surface of the body, all orifices and the cranial, thoracic, and abdominal cavities and their contents.

(ii) At least the liver, kidneys, brain, and gonads shall be trimmed and weighed wet, as soon as possible after dissection to avoid drying.

(iii) The following organs and tissues, or representative samples thereof, shall be preserved in a suitable medium for possible future histopathological examination:

(A) Digestive system.
(*1*) Salivary glands.
(*2*) Esophagus.
(*3*) Stomach.
(*4*) Duodenum.
(*5*) Jejunum.
(*6*) Ileum.
(*7*) Cecum.
(*8*) Colon.
(*9*) Rectum.
(*10*) Liver.
(*11*) Pancreas.
(*12*) Gallbladder (dogs).
(B) Nervous system.
(*1*) Brain (multiple sections).
(*2*) Pituitary.
(*3*) Peripheral nerve(s).
(*4*) Spinal cord (three levels).
(*5*) Eyes (retina, optic nerve).
(C) Glandular system.
(*1*) Adrenals.
(*2*) Parathyroids.
(*3*) Thyroids.
(D) Respiratory system.
(*1*) Trachea.
(*2*) Lung.
(*3*) Pharynx.
(*4*) Larynx.
(*5*) Nose.
(E) Cardiovascular/hematopoietic system.
(*1*) Aorta (thoracic).
(*2*) Heart.
(*3*) Bone marrow.
(*4*) Lymph nodes.
(*5*) Spleen.
(*6*) Thymus.
(F) Urogenital system.
(*1*) Kidneys.
(*2*) Urinary bladder.
(*3*) Prostate.
(*4*) Testes.
(*5*) Epididymides.
(*6*) Seminal vesicle(s).
(*7*) Uterus.
(*8*) Ovaries.
(G) Other.
(*1*) Lacrimal gland.
(*2*) Mammary gland.
(*3*) Skin.
(*4*) Skeletal muscle.
(*5*) All gross lesions and masses.
(*6*) Sternum and/or femur.

(15) *Histopathology*. (i) The following histopathology shall be performed:

(A) Full histopathology on the respiratory tract and other organs and tissues, listed under paragraph (e)(15)(iii) of this section, of all animals in the control and high exposure groups and all animals that died or were killed during the study.

(B) All gross lesions in all animals.

(C) Target organs in all animals.

(D) Lungs of all animals. Special attention to examination of the respiratory tract should be made for evidence of infection as this provides a convenient assessment of the state of health of the animals.

(E) When a satellite group is used, histopathology shall be performed on tissues and organs identified as showing effects in the treated groups.

(ii) If excessive early deaths or other problems occur in the high exposure group compromising the significance of the data, the next concentration should be examined for complete histopathology.

(iii) An attempt should be made to correlate gross observations with microscopic findings.

(iv) Tissues and organs designated for microscopic examination should be fixed in 10% buffered formalin or a recognized suitable fixative as soon as necropsy is performed and no less than 48 hrs prior to trimming. Tissues should be trimmed to a maximum thickness of 0.4 cm for processing.

(f) *Data and reporting*—(1) *Treatment of results.* (i) Data shall be summarized in tabular form, showing for each test group the number of animals at the start of the test, the number of animals showing lesions, the types of lesions, and the percentage of animals displaying each type of lesion.

(ii) All observed results (quantitative and qualitative) should be evaluated by an appropriate statistical method. Any generally accepted statistical method may be used; the statistical methods including significance criteria should be selected during the design of the study.

(2) *Evaluation of study results.* The findings of the subchronic inhalation toxicity study should be evaluated in conjunction with the findings of preceding studies and considered in terms of the observed toxic effects and the necropsy and histopathological findings. The evaluation will include the relationship between the concentration of the test substance and duration of exposure, and the presence or absence, the incidence and severity, of abnormalities, including behavioral and clinical abnormalities, gross lesions, identified target organs, body weight changes, effects on mortality and any other general or specific toxic effects. A properly conducted subchronic test should provide a satisfactory estimation of a no-effect level. It also can indicate the need for an additional longer-term study and provide information on the selection of concentrations.

(3) *Test report.* In addition to reporting requirements specified under 40 CFR part 792, subpart J, the following specific information shall be reported. Both individual and summary data should be presented.

(i) Test substance characterization shall include:

(A) Chemical identification.

(B) Lot or batch number.

(C) Physical properties.

(D) Purity/impurities.

(E) Identification and composition of any vehicle used.

(ii) Test system information shall include:

(A) Species and strain of animals used and rationale for selection if other than that recommended.

(B) Age, sex, and body weight.

(C) Test environment including cage conditions, ambient temperature, humidity, and light/dark periods.

(D) Identification of animal diet.

(E) Acclimation period.

(iii) Test procedure information shall include:

(A) Method of randomization used.

(B) Full description of experimental design and procedure.

(C) Exposure regimen including concentration levels, methods, and volume.

(D) Description of test conditions; the following exposure conditions shall be reported:

(*1*) Description of exposure apparatus including design, type, volume, source of air, system for generating aerosols, method of conditioning air, treatment of exhaust air and the method of housing the animals in a test chamber.

(*2*) The equipment for measuring temperature, humidity, and particulate aerosol concentrations and size should be described.

(E) Exposure data shall be tabulated and presented with mean values and a measure of variability (e.g., standard deviation) and include:

(*1*) Airflow rates through the inhalation equipment.

(*2*) Temperature and humidity of air.

(*3*) Actual (analytical or gravimetric) concentration in the breathing zone.

(*4*) Nominal concentration (total amount of test substance fed into the inhalation equipment divided by volume of air).

(*5*) Particle size distribution, calculated mass median aerodynamic diameter (MMAD) and geometric standard deviation (GSD).

(*6*) Explanation as to why the desired chamber concentration and/or particle size could not be achieved (if applicable) and the efforts taken to comply with this aspect of the section.

(iv) Test results information shall include:

(A) *Group animal data.* Tabulation of toxic response data by species, strain, sex and exposure level for:

(*1*) Number of animals exposed.

(*2*) Number of animals showing signs of toxicity.

(*3*) Number of animals dying.

(B) *Individual animal data.* Data should be presented as summary (group mean) as well as for individual animals.

(*1*) Time of death during the study or whether animals survived to termination.

(*2*) Time of observation of each abnormal sign and its subsequent course.

(*3*) Body weight data.

(*4*) Feed consumption data, when collected.

(*5*) Results of ophthalmological examination, when performed.

(*6*) Results of hematological tests performed. .

(*7*) Results of clinical chemistry tests performed.

(*8*) Results of urinalysis tests performed.

(*9*) Necropsy findings, including absolute and relative organ weight data.

(*10*) Detailed description of all histopathological findings.

(*11*) Statistical treatment of results, where appropriate.

(g) *Quality control.* A system shall be developed and maintained to assure and document adequate performance of laboratory staff and equipment. The study shall be conducted in compliance with 40 CFR part 792—Good Laboratory Practice Standards.

(h) *References.* For additional background information on this test guideline, the following references should be consulted. These references are available for inspection at the TSCA Nonconfidential Information Center, Rm. NE-B607, Environmental Protection Agency, 401 M St., SW., Washington, DC, 12 noon to 4 p.m., Monday through Friday, except legal holidays.

(1) Cage, J.C. Ed. Paget, G.E. *Experimental Inhalation Toxicology, Methods in Toxicology*. (F.A. Davis Co., Philadelphia, PA, 1970) pp. 258–277.

(2) Casarett, L.J. and Doull. Chapter 9. *Toxicology: The Basic Science of Poisons* (New York: Macmillan Publishing Co., Inc., 1975).

(3) U.S. Environmental Protection Agency, Office of Pesticide Programs, Health Effects Division. Interim policy for particle size and limit concentration issues in inhalation toxicity studies (February 1, 1994).

(4) MacFarland, H.N. Ed. Hayes, W.J. Vol. 7. *Respiratory Toxicology, Essays in Toxicology*. (Academic Press, New York, NY, 1976) pp. 121–154.

(5) Organisation for Economic Co-operation and Development. Guidelines for testing of chemicals, section 4-health effects, part 413. *Subchronic Inhalation Toxicity Studies* (Paris, 1981).

[62 FR 43824, Aug. 15, 1997, as amended at 64 FR 35077, June 30, 1999]

§ 799.9355 TSCA reproduction/developmental toxicity screening test.

(a) *Scope*—(1) *Applicability.* This section is intended to meet testing requirements of the Toxic Substances Control Act (TSCA) (15 U.S.C. 2601).

(2) *Source.* The source material used in developing this TSCA test guideline is the Office of Prevention, Pesticides, and Toxic Substances (OPPTS) harmonized test guideline 870.3550 (July 2000, final guidelines). This source is available at the address in paragraph (h) of this section.

(b) *Purpose.* (1) This guideline is designed to generate limited information concerning the effects of a test substance on male and female reproductive performance such as gonadal function, mating behavior, conception, development of the conceptus, and parturition. It is not an alternative to, nor does it replace, the existing comprehensive test standards in §§ 799.9370 and 799.9380.

(2) This screening test guideline can be used to provide initial information on possible effects on reproduction and/or development, either at an early stage of assessing the toxicological properties of chemicals, or on chemicals of high concern. It can also be used as part of a set of initial screening tests for existing chemicals for which little or no toxicological information is available, as a dose range finding study for more extensive reproduction/developmental studies, or when otherwise considered relevant.

(3) This test does not provide complete information on all aspects of reproduction and development. In particular, it offers only limited means of detecting postnatal manifestations of prenatal exposure, or effects that may be induced during postnatal exposure. Due (amongst other reasons) to the relatively small numbers of animals in the dose groups, the selectivity of the end points, and the short duration of the study, this method will not provide evidence for definite claims of no effects.

(c) *Definitions.* The definitions in section 3 of TSCA and in 40 CFR Part 792—Good Laboratory Practice Standards apply to this section. The following definitions also apply to this section.

Dosage is a general term comprising of dose, its frequency and the duration of dosing.

Dose is the amount of test substance administered. Dose is expressed as weight (g, mg) as weight of test substance per unit weight of test animal (e.g., mg/kg), or as constant dietary concentration parts per million (ppm).

No-observed-effects level (NOEL) is the maximum dose used in a study which produces no adverse effects. The NOEL is expressed in terms of the weight of a test substance given daily per unit weight of test animal (milligrams per kilograms per day).

(d) *Principle of the test.* (1) The test substance is administered in graduated doses to several groups of males and females. Males should be dosed for a minimum of four weeks and up to and including the day before scheduled sacrifice (this includes a minimum of two weeks prior to mating, during the mating period and, approximately, two weeks post-mating). In view of the limited pre-mating dosing period in males, fertility may not be a particular sensitive indicator of testicular toxicity. Therefore, a detailed histological examination of the testes is essential. The combination of a pre-mating dosing period of two weeks and subsequent mating/fertility observations with an overall dosing period of at least four weeks, followed by detailed histopathology of the male gonads, is considered sufficient to enable detection of the majority of effects on male fertility and spermatogenesis.

(2) Females should be dosed throughout the study. This includes two weeks prior to mating (with the objective of covering at least two complete oestrous cycles), the variable time to conception, the duration of pregnancy and at least four days after delivery, up to and including the day before scheduled sacrifice.

(3) Duration of study, following acclimatization, is dependent on the female performance and is approximately 54 days, (at least 14 days premating, (up to) 14 days mating, 22 days gestation, 4 days lactation).

(4) During the period of administration, the animals are observed closely each day for signs of toxicity. Animals which die or are sacrificed during the test period are necropsied and, at the conclusion of the test, surviving animals are sacrificed and necropsied.

(e) *Description of the method*—(1) *Selection of animal species.* This test standard is designed for use with the rat. If other species are used, appropriate modifications will be necessary. Strains with low fecundity or well-known high incidence of developmental defects should not be used. Healthy virgin animals, not subjected to previous experimental procedures, should be

used. The test animals should be characterized as to species, strain, sex, weight and/or age. At the commencement of the study the weight variation of animals used should be minimal and not exceed 20% of the mean weight of each sex.

(2) *Housing and feeding conditions.* (i) The temperature in the experimental animal room should be 22 °C (±3°). Although the relative humidity should be at least 30% and preferably not exceed 70% other than during room cleaning, the aim should be 50–60%. Lighting should be artificial, the sequence being 12 hours light, 12 hours dark. For feeding, conventional laboratory diets may be used with an unlimited supply of drinking water. The choice of diet may be influenced by the need to ensure a suitable admixture of a test substance when administered by this method.

(ii) Animals may be housed individually or be caged in small groups of the same sex; for group caging, no more than five animals should be housed per cage. Mating procedures should be carried out in cages suitable for the purpose. Pregnant females should be caged individually and provided with nesting materials.

(3) *Preparation of the animals.* Healthy young adult animals must be randomly assigned to the control and treatment groups. Cages should be arranged in such a way that possible effects due to cage placement are minimized. The animals must be uniquely identified and kept in their cages for at least five days prior to the start of the study to allow for acclimatization to the laboratory conditions.

(4) *Preparation of doses.* (i) It is recommended that the test substance be administered orally unless other routes of administration are considered more appropriate. When the oral route is selected, the test compound is usually administered by gavage; however, alternatively, test compounds may be administered via the diet or drinking water.

(ii) Where necessary, the test substance is dissolved or suspended in a suitable vehicle. It is recommended that, wherever possible, the use of an aqueous solution/suspension be considered first, followed by consideration of a solution/emulsion in oil (e.g., corn oil) and then by possible solution in other vehicles. For vehicles other than water the toxic characteristics of the vehicle must be known. The stability of the test substance in the vehicle should be determined.

(f) *Procedure*—(1) *Number and sex of animals.* It is recommended that each group be started with at least 10 animals of each sex. Except in the case of marked toxic effects, it is expected that this will provide at least 8 pregnant females per group which normally is the minimum acceptable number of pregnant females per group. The objective is to produce enough pregnancies and offspring to assure a meaningful evaluation of the potential of the substance to affect fertility, pregnancy, maternal and suckling behaviour, and growth and development of the F_1 offspring from conception to day 4 postpartum.

(2) *Dosage.* (i) Generally, at least three test groups and a control group should be used. Dose levels may be based on information from acute toxicity tests or on results from repeated dose studies. Except for treatment with the test substance, animals in the control group should be handled in an identical manner to the test group subjects. If a vehicle is used in administering the test substance, the control group should receive the vehicle in the highest volume used.

(ii) Dose levels should be selected taking into account any existing toxicity and (toxico-) kinetic data available for the test compound or related materials. The highest dose level should be chosen with the aim of inducing toxic effects but not death or severe suffering. Thereafter, a descending sequence of dose levels should be selected in order to demonstrate any dose response relationships and no adverse effects at the lowest dose level. Two to four fold intervals are frequently optimal for setting the descending dose levels and addition of a fourth test group is often preferable to using very large intervals (e.g., more than a factor of 10) between dosages.

(3) *Limit test.* If an oral study at one dose level of at least 1000 mg/kg body weight/day or, for dietary or drinking water administration, an equivalent percentage in the diet, or drinking

water using the procedures described for this study, produces no observable toxic effects and if toxicity would not be expected based upon data from structurally related compounds, then a full study using several dose levels may not be considered necessary. The limit test applies except when human exposure indicates the need for a higher oral dose level to be used. For other types of administration, such as inhalation or dermal application, the physical chemical properties of the test substance often may dictate the maximum attainable concentration.

(4) *Administration of doses.* (i) The animals must be dosed with the test substance daily for seven days a week. When the test substance is administered by gavage, this should be done in a single dose to the animals using a stomach tube or a suitable intubation cannula. The maximum volume of liquid that can be administered at one time depends on the size of the test animal. The volume should not exceed 1 ml/100 g body weight, except in the case of aqueous solutions where 2 ml/100 g body weight may be used. Except for irritating substances which will normally reveal exacerbated effects with higher concentrations, variability in test volume should be minimized by adjusting the concentration to ensure a constant volume at all dose levels.

(ii) For substances administered via the diet or drinking water, it is important to ensure that the quantities of the test substance involved do not interfere with normal nutrition or water balance. When the test substance is administered in the diet either a constant dietary concentration (parts per million (ppm)) or a constant dose level in terms of the animals' body weight may be used; the alternative used must be specified. For a substance administered by gavage, the dose should be given at similar times each day, and adjusted at least weekly to maintain a constant dose level in terms of animal body weight.

(5) *Experimental schedule.* (i) Dosing of both sexes should begin at least 2 weeks prior to mating, after they have been acclimatized for at least five days. The study should be scheduled in such a way that mating begins soon after the animals have attained full sexual maturity. This may vary slightly for different strains of rats in different laboratories, e.g., Sprague Dawley rats 10 weeks of age, Wistar rats about 12 weeks of age. Dams with offspring should be sacrificed on day 4 post-partum, or shortly thereafter. The day of birth (viz. when parturition is complete) is defined as day 0 post-partum. Females showing no-evidence of copulation are sacrificed 24–26 days after the last day of the mating period. Dosing is continued in both sexes during the mating period. Males should further be dosed after the mating period at least until the minimum total dosing period of 28 days has been completed. They are then sacrificed, or, alternatively, are retained and continued to be dosed for the possible conduction of a second mating if considered appropriate.

(ii) Daily dosing of the parental females should continue throughout pregnancy and at least up to, and including, day 3 post-partum or the day before sacrifice. For studies where the test substance is administered by inhalation or by the dermal route, dosing should be continued at least up to, and including, day 19 of gestation.

(iii) The experimental schedule is given in the following figure 1.

FIGURE 1

DIAGRAM OF THE EXPERIMENTAL SCHEDULE INDICATING THE MAXIMUM STUDY DURATION, BASED ON A FULL 14-DAY MATING PERIOD

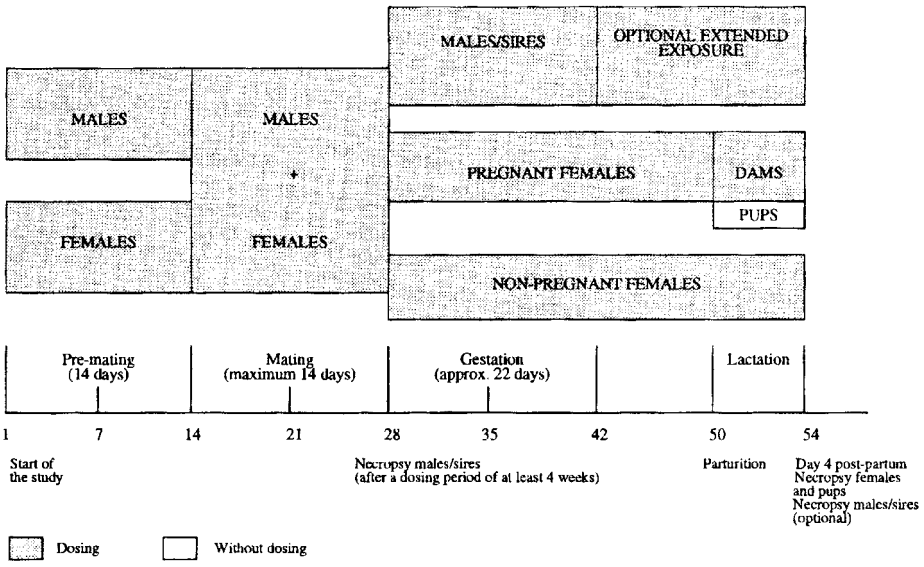

(6) *Mating procedure.* Normally, 1:1 (one male to one female) matings should be used in this study. Exceptions can arise in the case of occasional deaths of males. The female should be placed with the same male until pregnancy occurs or two weeks have elapsed. Each morning the females should be examined for the presence of sperm or a vaginal plug. Day 0 of pregnancy is defined as the day a vaginal plug or sperm is found.

(7) *Observations.* (i) Throughout the test period, general clinical observations should be made at least once a day, and more frequently when signs of toxicity are observed. They should be made preferably at the same time(s) each day, considering the peak period of anticipated effects after dosing. Pertinent behavioural changes, signs of difficult or prolonged parturition and all signs of toxicity, including mortality, should be recorded. These records should include time of onset, degree and duration of toxicity signs.

(ii) The duration of gestation should be recorded and is calculated from day 0 of pregnancy. Each litter should be examined as soon as possible after delivery to establish the number and sex of pups, stillbirths, live births, runts (pups that are significantly smaller than corresponding control pups) and the presence of gross abnormalities.

(iii) Live pups should be counted and sexed and litters weighed within 24 hours of parturition (day 1) and on day 4 post-partum. In addition to the observations on parent animals, described by paragraph (f)(7) of this section, any abnormal behaviour of the offspring should be recorded.

(8) *Body weight and food/water consumption.* (i) Males and females should be individually weighed on the first day of dosing, at least weekly thereafter, and at termination. During pregnancy, females should be weighed on days 0, 7, 14 and 20 and within 24 hours of parturition (day 1) and day 4 post-partum.

(ii) During pre-mating, pregnancy and lactation, food consumption should be measured at least weekly. The measurement of food consumption during mating is optional. Water consumption during these periods should also be

measured when the test substance is administered via drinking water.

(9) *Pathology*—(i) *Gross necropsy*. (A) At the time of sacrifice or death during the study, the adult animals should be examined macroscopically for any abnormalities or pathological changes. Special attention should be paid to the organs of the reproductive system. The number of implantation sites should be recorded. Corpora lutea should be counted.

(B) The testes and epididymides of all male adult animals should be weighed.

(C) Dead pups and pups sacrificed at day 4 post-partum, or shortly thereafter, should, at least, be carefully examined externally for gross abnormalities.

(D) The ovaries, testes, epididymides, accessory sex organs and all organs showing macroscopic lesions of all adult animals should be preserved. Formalin fixation is not recommended for routine examination of testes and epididymides. An acceptable method is the use of Bouin's fixative for these tissues.

(ii) *Histopathology*. (A) Detailed histological examination should be performed on the ovaries, testes and epididymides of the animals of the highest dose group and the control group. The other preserved organs may be examined when necessary. Examinations should be extended to the animals of other dosage groups when changes are seen in the highest dose group.

(B) Detailed testicular histopathological examination (e.g., using Bouin's fixative, paraffin embedding and transverse sections of 4-5 ±m thickness) should be conducted with special emphasis on stages of spermatogenesis and histopathology interstitial testicular cell structure. The evaluation should identify treatment-related effects such as retained spermatids, missing germ cell layers or types, multinucleated giant cells or sloughing of spermatogenic cells into the lumen (the specifications for the evaluation are discussed in paragraph (g)(2) of this section). Examination of the intact epididymis should include the caput, corpus, and cauda, which can be accomplished by evaluation of a longitudinal section. The epididymis should be evaluated for leukocyte infiltration, change in prevalence of cell types, aberrant cell types, and phagocytosis of sperm. PAS and hematoxylin staining may be used for examination of the male reproductive organs. Histopathological examination of the ovary should detect qualitative depletion of the primordial follicle population.

(g) *Data and reporting*—(1) *Data*. Individual animal data should be provided. Additionally, all data should be summarised in tabular form, showing for each test group the number of animals at the start of the test, the number of animals found dead during the test or sacrificed for humane reasons, the time of any death or humane sacrifice, the number of fertile animals, the number of pregnant females, the number of animals showing signs of toxicity, a description of the signs of toxicity observed, including time of onset, duration, and severity of any toxic effects, the types of histopathological changes, and all relevant litter data.

(2) *Evaluation of results.* (i) The findings of this toxicity study should be evaluated in terms of the observed effects, necropsy and microscopic findings. This evaluation must include the relationship between the dose of the test substance and the presence or absence, incidence and severity of abnormalities, including gross lesions, identified target organs, infertility, clinical abnormalities, affected reproductive and litter performance, body weight changes, effects on mortality and any other toxic effects.

(ii) Because of the short period of treatment of the male, the histopathology of the testis and epididymus must be considered along with the fertility data, when assessing male reproductive effects.

(iii) Due to the limited dimensions of the study, statistical analysis in the form of tests for ''significance'' are of limited value for many endpoints, especially reproductive endpoints. If statistical analyses are used then the method chosen should be appropriate for the distribution of the variable examined, and be selected prior to the start of the study. Because of the small group size, the use of historic control data (e.g.,

for litter size), where available, may also be useful as an aid to the interpretation of the study.

(3) *Test report.* The test report must include the following information:

(i) Test substance:

(A) Physical nature and, where relevant, physicochemical properties.

(B) Identification data.

(ii) Vehicle (if appropriate): Justification for choice of vehicle if other than water.

(iii) Test animals:

(A) Species/strain used.

(B) Number, age and sex of animals.

(C) Source, housing conditions, diet, etc.

(D) Individual weights of animals at the start of the test.

(iv) Test conditions:

(A) Rationale for dose level selection.

(B) Details of test substance formulation/diet preparation, achieved concentrations, stability and homogeneity of the preparation.

(C) Details of the administration of the test substance.

(D) Conversion from diet/drinking water test substance concentration (parts per million (ppm)) to the actual dose (mg/kg body weight/day), if applicable.

(E) Details of food and water quality.

(v) Results (toxic response data by sex and dose):

(A) Time of death during the study or whether animals survived to termination.

(B) Nature, severity and duration of clinical observations (whether reversible or not).

(C) Body weight/body weight change data.

(D) Food consumption and water consumption, if applicable.

(E) Effects on reproduction, including information on mating/precoital interval, fertility, fecundity and gestation duration.

(F) Effects on offspring, including number of pups born (live and dead), sex ratio, postnatal growth (pup weights) and survival (litter size), gross abnormalities and clinical observations during lactation.

(G) Body weight at termination and organ weight data for the parental animals.

(H) Necropsy data, including number of implantations and number of corpora lutea.

(I) Calculations of pre- and postimplantation loss.

(J) Detailed description of histopathological findings.

(K) Statistical treatment of results, where appropriate.

(vi) Discussion of results.

(vii) Conclusions.

(4) *Interpretation of results.* The study will provide evaluations of reproduction/developmental toxicity associated with administration of repeated doses. It could provide an indication of the need to conduct further investigations and provides guidance in the design of subsequent studies.

(h) *References.* For additional background information on this test guideline, the following references should be consulted. These references are available for inspection at the TSCA Nonconfidential Information Center, Rm. NE-B607, Environmental Protection Agency, 401 M St., SW., Washington, DC, 12 noon to 4 p.m., Monday through Friday, except legal holidays.

(1) OECD (1995). Reproduction/Developmental Toxicity Screening Test, OECD 421, OECD Guidelines for Testing of Chemicals.

(2) [Reserved]

[65 FR 78789, Dec. 15, 2000]

§ 799.9365 TSCA combined repeated dose toxicity study with the reproduction/developmental toxicity screening test.

(a) *Scope*—(1) *Applicability.* This section is intended to meet testing requirements of the Toxic Substances Control Act (TSCA) (15 U.S.C. 2601).

(2) *Source.* The source material used in developing this TSCA test guideline is the Office of Prevention, Pesticides and Toxic Substances (OPPTS) harmonized test guideline 870.3650 (July 2000, final guidelines). This source is available at the address in paragraph (h) of this section.

(b) *Purpose.* (1) This screening test provides limited information on systemic toxicity, neurotoxicity, and/or immunotoxicity following repeated exposure over a limited time period. In addition, it can be used to provide initial information on possible effects on

male and female reproductive performance such as gonadal function, mating behavior, conception, development of the conceptus, and parturition. It is not an alternative to, nor does it replace, the existing test guidelines in §§ 799.9370, 799.9380, 799.9620, and 799.9780 of this part.

(2) This test does not provide complete information on all aspects of reproduction and development. In particular, it offers only limited means of detecting postnatal manifestations of prenatal exposure, or effects that may be induced during postnatal exposure. Due (amongst other reasons) to the selectivity of the end points, and the short duration of the study, this method will not provide evidence for definite claims of no reproduction/developmental effects.

(3) This test can be used to provide initial information either at an early stage of assessing the toxicological properties of chemicals, or chemicals of high concern. It can also be used as part of a set of initial screening tests for existing chemicals for which little or no toxicological information is available or when otherwise considered relevant. It also can serve as an alternative to conducting two separate screening tests for repeated dose toxicity as described in § 799.9305 of this part and reproductive/developmental toxicity as described in § 799.9355 of this part.

(c) *Definitions.* The definitions in section 3 of TSCA and in 40 CFR Part 792—Good Laboratory Practice Standards apply to this section. The following definitions also apply to this section.

Dosage is a general term comprising dose, its frequency and the duration of dosing.

Dose is the amount of test substance administered. Dose is expressed as weight (g, gm) or as weight of test substance per unit weight of test animal (e.g., mg/kg), or as constant dietary concentration (parts per million (ppm)).

No-observed-effects level (NOEL) is the maximum dose used in a study which produces no adverse effects. The NOEL is expressed in terms of the weight of a test substance given daily per unit weight of test animal (milligrams per kilogram per day).

(d) *Principle of the test.* (1) The test substance must be administered in graduated doses to several groups of males and females. Males should be dosed for a minimum of 4 weeks, up to and including the day before scheduled sacrifice (this includes a minimum of 2 weeks prior to mating, during the mating period and, approximately, 2 weeks post mating). In view of the limited pre-mating dosing period in males, fertility may not be a particularly sensitive indicator of testicular toxicity. Therefore, a detailed histological examination of the testes is essential. The combination of a pre-mating dosing period of 2 weeks and subsequent mating/fertility observations with an overall dosing period of at least 4 weeks, followed by detailed histopathology of the male gonads, is considered sufficient to enable detection of the majority of effects on male fertility and spermatogenesis.

(2) Females should be dosed throughout the study. This includes 2 weeks prior to mating (with the objective of covering at least two complete oestrous cycles), the variable time to conception, the duration of pregnancy and at least 4 days after delivery, up to and including the day before scheduled sacrifice.

(3) Duration of study, following acclimatization, is dependent on the female performance and is approximately 54 days, (at least 14 days pre-mating, (up to) 14 days mating, 22 days gestation, 4 days lactation).

(4) During the period of administration, the animals are observed closely each day for signs of toxicity. Animals which die or are sacrificed during the test are necropsied and, at the conclusion of the test, surviving animals are sacrificed and necropsied.

(e) *Description of the method*—(1) *Selection of animal species.* This test guideline is designed for use with the rat. If other species are used, appropriate modifications will be necessary. Strains with low fecundity or well-known high incidence of developmental defects should not be used. Healthy virgin animals, not subjected to previous experimental procedures, should be used. The test animals should be characterised as to species, strain, sex,

weight and/or age. At the commencement of the study the weight variation of animals used should be minimal and not exceed ±20% of the mean weight of each sex. Where the study is conducted as a preliminary study to a long-term or a full-generation study, preferably animals from the same strain and source should be used in both studies.

(2) *Housing and feeding conditions.* (i) The temperature in the experimental animal room should be 22 °C (±3°). The relative humidity should be at least 30% and preferably not exceed 70% other than during room cleaning. Lighting should be artificial, the sequence being 12 hours light, 12 hours dark. For feeding, conventional laboratory diets may be used with an unlimited supply of drinking water. The choice of diet may be influenced by the need to ensure a suitable admixture of a test substance when administered by this method.

(ii) Animals may be housed individually or be caged in small groups of the same sex; for group caging, no more than five animals should be housed per cage. Mating procedures should be carried out in cages suitable for the purpose. Pregnant females should be caged individually and provided with nesting materials.

(3) *Preparation of the animals.* Healthy young adult animals must be randomised and assigned to the treatment groups and cages. Cages should be arranged in such a way that possible effects due to cage placements are minimized. The animals must be uniquely identified and kept in their cages for at least 5 days prior to the start of the study to allow for acclimatisation to the laboratory conditions.

(4) *Preparation of doses.* (i) It is recommended that the test substance be administered orally unless other routes of administration are considered more appropriate. When the oral route is selected, the test compound is usually administered by gavage; however, alternatively, test compounds may also be administered via the diet or drinking water.

(ii) Where necessary, the test substance is dissolved or suspended in a suitable vehicle. It is recommended that, wherever possible, the use of an aqueous solution/suspension be considered first, followed by consideration of a solution/emulsion in oil (e.g., corn oil) and then by possible solution in other vehicles. For non-aqueous vehicles the toxic characteristics of the vehicle must be known. The stability of the test substance in the vehicle should be determined.

(f) *Procedure*—(1) *Number and sex of animals.* It is recommended that each group be started with at least 10 animals of each sex. Except in the case of marked toxic effects, it is expected that this will provide at least eight pregnant females per group which normally is the minimum acceptable number of pregnant females per group. The objective is to produce enough pregnancies and offspring to assure a meaningful evaluation of the potential of the substance to affect fertility, pregnancy, maternal and suckling behaviour, and growth and development of the F_1 offspring from conception to day 4 post-partum. If interim sacrifices are planned, the number should be increased by the number of animals scheduled to be sacrificed before the completion of the study. Consideration should be given to an additional satellite group of five animals per sex in the control and the top dose group for observation of reversibility, persistence or delayed occurrence of systemic toxic effects, for at least 14 days post treatment. Animals of the satellite groups must not be mated and, consequently, must not used for the assessment of reproduction/developmental toxicity.

(2) *Dosage.* (i) Generally, at least three test groups and a control group should be used. If there are no suitable general toxicity data available, a range finding study may be performed to aid the determination of the doses to be used. Except for treatment with the test substance, animals in the control group should be handled in an identical manner to the test group subjects. If a vehicle is used in administering the test substance, the control group should receive the vehicle in the highest volume used.

(ii) Dose levels should be selected taking into account any existing toxicity and (toxico-) kinetic data available for the test compound or related

materials. It should also be taken into account that there may be differences in sensitivity between pregnant and non-pregnant animals. The highest dose level should be chosen with the aim of inducing toxic effects but not death nor obvious suffering. Thereafter, a descending sequence of dose levels should be selected with a view to demonstrating any dosage related response and no adverse effects at the lowest dose level. Two- to four-fold intervals are frequently optimum and addition of a fourth test group is often preferable to using very large intervals (e.g., more than a factor of 10) between dosages.

(3) *Limit test.* If an oral study at 1-dose level of at least 1000 mg/kg body weight/day or, for dietary administration, an equivalent percentage in the diet, or drinking water (based upon body weight determinations), using the procedures described for this study, produces no observable toxic effects and if toxicity would not be expected based upon data from structurally related compounds, then a full study using several dose levels may not be considered necessary. The limit test applies except when human exposure indicates the need for a higher dose level to be used. For other types of administration, such as inhalation or dermal application, the physical chemical properties of the test substance often may dictate the maximum attainable exposure.

(4) *Administration of doses.* (i) The animals are dosed with the test substance daily for 7 days a week. When the test substance is administered by gavage, this should be done in a single dose to the animals using a stomach tube or a suitable intubation cannula. The maximum volume of liquid that can be administered at one time depends on the size of the test animal. The volume should not exceed 1 ml/100 g body weight, except in the case of aqueous solutions where 2 ml/100 g body weight may be used. Except for irritating or corrosive substances which will normally reveal exacerbated effects with higher concentrations, variability in test volume should be minimized by adjusting the concentration to ensure a constant volume at all dose levels.

(ii) For substances administered via the diet or drinking water, it is important to ensure that the quantities of the test substance involved do not interfere with normal nutrition or water balance. When the test substance is administered in the diet either a constant dietary concentration (parts per million (ppm)) or a constant dose level in terms of the animals' body weight may be used; the alternative used must be specified. For a substance administered by gavage, the dose should be given at similar times each day, and adjusted at least weekly to maintain a constant dose level in terms of animal body weight.

(5) *Experimental schedule.* (i) Dosing of both sexes should begin 2 weeks prior to mating, after they have been acclimatized for at least 5 days. The study should be scheduled in such a way that mating begins soon after the animals have attained full sexual maturity. This may vary slightly for different strains of rats in different laboratories, e.g., Sprague Dawley rats 10 weeks of age, Wistar rats about 12 weeks of age. Dams with offspring should be sacrificed on day 4 post-partum, or shortly thereafter. In order to allow for overnight fasting of dams prior to blood collection (if this option is preferred), dams and their offspring need not necessarily be sacrificed on the same day. The day of birth (viz. when parturition is complete) is defined as day 0 post-partum. Females showing no-evidence of copulation are sacrificed 24–26 days after the last day of the mating period. Dosing is continued in both sexes during the mating period. Males should further be dosed after the mating period at least until the minimum total dosing period of 28 days has been completed. They are then sacrificed, or, alternatively, are retained and continued to be dosed for the possible conduction of a second mating if considered appropriate.

(ii) Daily dosing of the parental females should continue throughout pregnancy and at least up to, and including, day 3 post-partum or the day before sacrifice. For studies where the test substance is administered by inhalation or by the dermal route, dosing should be continued at least up to, and including, day 19 of gestation.

(iii) Animals in a satellite group scheduled for follow-up observations, if included, must not mated. They should be kept at least for a further 14 days after the first scheduled sacrifice of dams, without treatment to detect delayed occurrence, or persistence of, or recovery from toxic effects.

(iv) The experimental schedule is given in the following figure 1.

Figure 1

DIAGRAM OF THE EXPERIMENTAL SCHEDULE, INDICATING THE MAXIMUM STUDY DURATION, BASED ON A FULL 14-DAY MATING PERIOD

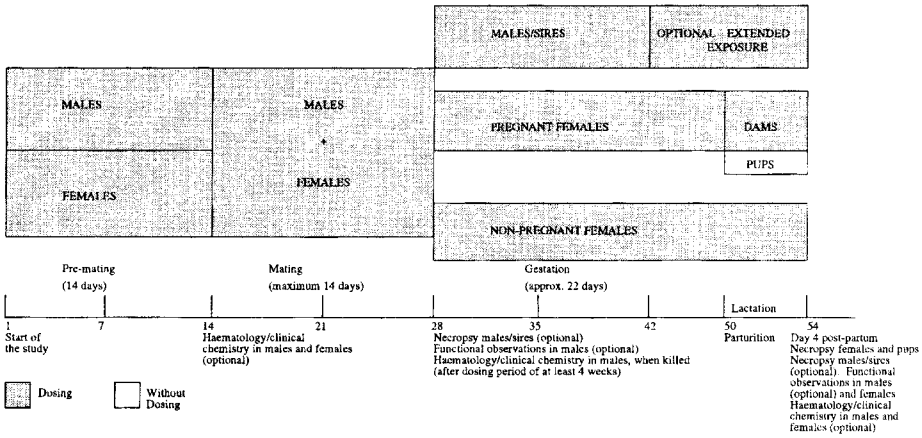

(6) *Mating procedure.* Normally, 1:1 (one male to one female) matings should be used in this study. Exceptions can arise in the case of occasional deaths of males. The female should be placed with the same male until pregnancy occurs or 2 weeks have elapsed. Each morning the females should be examined for the presence of sperm or a vaginal plug. Day 0 of pregnancy is defined as the day a vaginal plug or sperm is found. In case pairing was unsuccessful, re-mating of females with proven males of the same group could be considered.

(7) *Observations.* (i) General clinical observations should be made at least once a day, preferably at the same time(s) each day and considering the peak period of anticipated effects after dosing. The health condition of the animals should be recorded. At least twice daily all animals must be observed for morbidity and mortality.

(ii) Once before the first exposure (to allow for within-subject comparisons), and at least once a week thereafter, detailed clinical observations should be made in all animals. These observations should be made outside the home cage in a standard arena and preferably at the same time, each day. They should be carefully recorded; preferably using scoring systems, explicitly defined by the testing laboratory. Effort should be made to ensure that variations in the test conditions are minimal and that observations are preferably conducted by observers unaware of the treatment. Signs noted should include, but not be limited to, changes in skin, fur, eyes, mucous membranes, occurrence of secretions and excretions and autonomic activity (e.g., lacrimation, piloerection, pupil size, unusual respiratory pattern). Changes in gait, posture and response to handling as well as the presence of clonic or tonic movements, stereotypies (e.g., excessive grooming, repetitive circling), difficult or prolonged parturition or bizarre behaviour (e.g., self-mutilation, walking backwards) should also be recorded.

(iii) At one time during the study, sensory reactivity to stimuli of different modalities (e.g., auditory, visual and proprioceptive stimuli) assessment of grip strength and motor activity assessment should be conducted in five males and five females, randomly selected from each group. Further details of the procedures that could be followed are given in the respective references. However, alternative procedures than those referenced could also be used. In males, these functional observations should be made towards the end of their dosing period, shortly before scheduled sacrifice but before blood sampling for hematology or clinical chemistry. Females should be in a physiologically similar state during these functional tests and should preferably be tested during lactation, shortly before scheduled sacrifice. In order to avoid hypothermia of pups, dams should be removed from the pups for not more than 30 to 40 minutes. Examples of procedures for observation are described in the references in paragraphs (h)(3), (h)(4), (h)(5), (h)(6), and (h)(7) of this section.

(iv) Functional observations made once towards the end of the study may be omitted when the study is conducted as a preliminary study to a subsequent subchronic (90-day) or long-term study. In that case, the functional observations should be included in this follow-up study. On the other hand, the availability of data on functional observations from this repeated dose study may enhance the ability to select dose levels for a subsequent subchronic or long-term study.

(v) Functional observations may also be omitted for groups that otherwise reveal signs of toxicity to an extent that would significantly interfere with the functional test performance.

(vi) The duration of gestation should be recorded and is calculated from day 0 of pregnancy. Each litter should be examined as soon as possible after delivery to establish the number and sex of pups, stillbirths, live births, runts (pups that are significantly smaller than corresponding control pups), and the presence of gross abnormalities.

(vii) Live pups should be counted and sexed and litters weighed within 24 hours of parturition (day 0 or 1 post-partum) and on day 4 post-partum. In addition to the observations on parental animals, described by paragraphs (f)(7)(ii) and (f)(7)(iii) of this section, any abnormal behaviour of the offspring should be recorded.

(8) *Body weight and food/water consumption*. (i) Males and females should be weighed on the first day of dosing, at least weekly thereafter, and at termination. During pregnancy, females should be weighed on days 0, 7, 14 and 20 and within 24 hours of parturition (day 0 or 1 post-partum), and day 4 post-partum. These observations should be reported individually for each adult animal.

(ii) During pre-mating, pregnancy and lactation, food consumption should be measured at least weekly. The measurement of food consumption during mating is optional. Water consumption during these periods should also be measured, when the test substance is administered by that medium.

(9) *Hematology*. (i) Once during the study, the following hematological examinations should be made in five males and five females randomly selected from each group: hematocrit, hemoglobin concentration, erythrocyte count, total and differential leucocyte count, platelet count and a measure of blood clotting time/potential.

(ii) Blood samples should be taken from a named site. Females should be in a physiologically similar state during sampling. In order to avoid practical difficulties related to the variability in the onset of gestation, blood collection in females may be done at the end of the pre-mating period as an alternative to sampling just prior to, or as part of, the procedure for sacrificing the animals. Blood samples of males should preferably be taken just prior to, or as part of, the procedure for sacrificing the animals. Alternatively, blood collection in males may also be done at the end of the pre-mating period when this time point was preferred for females.

(iii) Blood samples should be stored under appropriate conditions.

(10) *Clinical biochemistry*. (i) Clinical biochemistry determinations to investigate major toxic effects in tissues and, specifically, effects on kidney and liver, should be performed on blood

samples obtained from the selected five males and five females of each group. Overnight fasting of the animals prior to blood sampling is recommended[1]. Investigations of plasma or serum must include sodium, potassium, glucose, total cholesterol, urea, creatinine, total protein and albumin, at least two enzymes indicative of hepatocellular effects (such as alanine aminotransferase, aspartate aminotransferase and sorbitol dehydrogenase) and bile acids. Measurements of additional enzymes (of hepatic or other origin) may provide useful information under certain circumstances.

(ii) Optionally, the following urinalysis determinations could be performed in five randomly selected males of each group during the last week of the study using timed urine volume collection; appearance, volume, osmolality or specific gravity, pH, protein, glucose and blood or blood cells.

(iii) In addition, studies to investigate serum markers of general tissue damage should be considered. Other determinations that should be carried out if the known properties of the test substance may, or are suspected to, affect related metabolic profiles include calcium, phosphate, fasting triglycerides and fasting glucose, specific hormones, methemoglobin and cholinesterase. These need to be identified on a case-by-case basis.

(iv) Overall, there is a need for a flexible approach, depending on the observed and/or expected effect with a given compound.

(v) If historical baseline data are inadequate, consideration should be given to determination of hematological and clinical biochemistry variables before dosing commences.

(11) *Pathology*—(i) *Gross necropsy*. (A) All adult animals in the study must be subjected to a full, detailed gross necropsy which includes careful examination of the external surface of the body, all orifices, and the cranial, thoracic and abdominal cavities and their contents. Special attention should be paid to the organs of the reproductive system. The number of implantation sites should be recorded. Corpora lutea should be counted.

(B) The testes and epididymides of all adult males should be weighed and the ovaries, testes, epididymides, accessory sex organs, and all organs showing macroscopic lesions of all adult animals, should be preserved.

(C) In addition, for five adult males and females, randomly selected from each group, the liver, kidneys, adrenals, thymus, spleen, brain and heart should be trimmed of any adherent tissue, as appropriate and their wet weight taken as soon as possible after dissection to avoid drying. Of the selected males and females, the following tissues should also be preserved in the most appropriate fixation medium for both the type of tissue and the intended subsequent histopathological examination: all gross lesions, brain (representative regions including cerebrum, cerebellum and pons), spinal cord, stomach, small and large intestines (including Peyer's patches), liver, kidneys, adrenals, spleen, heart, thymus, thyroid, trachea and lungs (preserved by inflation with fixative and then immersion), uterus, urinary bladder, lymph nodes (preferably 1 lymph node covering the route of administration and another one distant from the route of administration to cover systemic effects), peripheral nerve (sciatic or tibial) preferably in close proximity to the muscle, and a section of bone marrow (or, alternatively, a fresh mounted marrow aspirate).

(D) Formalin fixation is not recommended for routine examination of testes and epididymides. An acceptable method is the use of Bouin's fixative for these tissues. The clinical and other findings may suggest the need to examine additional tissues. Also, any organs

[1] For a number of measurements in serum and plasma, most notably for glucose, overnight fasting would be preferable. The major reason for this preference is that the increased variability which would inevitably result from non-fasting, would tend to mask more subtle effects and make interpretation difficult. On the other hand, however, overnight fasting may interfere with the general metabolism of the (pregnant) animals, disturbs lactation and nursing behaviour, and, particularly in feeding studies, may disturb the daily exposure to the test substance. If overnight fasting is adopted, clinical biochemical determinations should be performed after the conduct of functional observations in week 4 of the study.

considered likely to be target organs based on the known properties of the test substance should be preserved.

(E) Dead pups and pups sacrificed at day 4 post-partum, or shortly thereafter, should, at least, be carefully examined externally for gross abnormalities.

(ii) *Histopathology*. (A) Full histopathology should be conducted on the preserved organs and tissues of the selected animals in the control and high dose groups and all gross lesions. These examinations should be extended to animals of other dosage groups if treatment-related changes are observed in the high dose group.

(B) Detailed testicular histopathological examination (e.g., using Bouin's fixative, paraffin embedding and transverse sections of 4–5 ±m thickness) should be conducted with special emphasis on stages of spermatogenesis and histopathology interstitial testicular cell structure. The evaluation should identify treatment-related effects such as retained spermatids, missing germ cell layers or types, multinucleated giant cells or sloughing of spermatogenic cells into the lumen (the specifications for the evaluation are discussed in paragraph (g)(2) of this section). Examination of the intact epididymis should include the caput, corpus, and cauda, which can be accomplished by evaluation of a longitudinal section. The epididymis should be evaluated for leukocyte infiltration, change in prevalence of cell types, aberrant cell types, and phagocytosis of sperm. Periodic acid-Schiff (PAS) and hematoxylin staining may be used for examination of the male reproductive organs. Histopathological examination of the ovary should detect qualitative depletion of the primordial follicle population.

(C) When a satellite group is used, histopathology should be performed on tissues and organs identified as showing effects in the treated groups.

(g) *Data and reporting*—(1) *Data*. Individual animal data should be provided. Additionally, all data should be summarised in tabular form, showing for each test group the number of animals at the start of the test, the number of animals found dead during the test or sacrificed for humane reasons, the time of any death or humane sacrifice, the number of fertile animals, the number of pregnant females, the number of animals showing signs of toxicity, a description of the signs of toxicity observed, including time of onset, duration, and severity of any toxic effects, the types of histopathological changes, and all relevant litter data.

(2) *Evaluation of results*. (i) The findings of this toxicity study should be evaluated in terms of the observed effects, necropsy and microscopic findings. The evaluation will include the relationship between the dose of the test substance and the presence or absence, incidence and severity of abnormalities, including gross lesions, identified target organs, infertility, clinical abnormalities, affected reproductive and litter performance, body weight changes, effects on mortality and any other toxic effects.

(ii) Because of the short period of treatment of the male, the histopathology of the testes and epididymides must be considered along with the fertility data, when assessing male reproduction effects. The use of historic control data on reproduction/development (e.g. for litter size) where available may also be useful as an aid to the interpretation of the study.

(iii) When possible, numerical results should be evaluated by an appropriate and general acceptable statistical method. The statistical methods should be selected during the design of the study. Due to the limited dimensions of the study, statistical analysis in the form of tests for ''significance'' are of limited value for many endpoints, especially reproductive endpoints. Some of the most widely used methods, especially parametric tests for measures of central tendency, are inappropriate. If statistical analyses are used then the method chosen should be appropriate for the distribution of the variable examined and be selected prior to the start of the study.

(3) *Test report*. The test report must include the following information:

(i) Test substance:

(A) Physical nature and, where relevant, physicochemical properties.

(B) Identification data.

(ii) Vehicle (if appropriate): Justification for choice of vehicle, if other than water.

(iii) Test animals:

(A) Species/strain used.

(B) Number, age and sex of animals.

(C) Source, housing conditions, diet, etc.

(D) Individual weights of animals at the start of the test.

(iv) Test conditions:

(A) Rationale for dose level selection.

(B) Details of test substance formulation/diet preparation, achieved concentration, stability and homogeneity of the preparation.

(C) Details of the administration of the test substance.

(D) Conversion from diet/drinking water test substance concentration (parts per mission (ppm)) to the actual dose (mg/kg body weight/day), if applicable.

(E) Details of food and water quality.

(v) Results (toxic response data by sex and dose):

(A) Time of death during the study or whether animals survived to termination.

(B) Nature, severity and duration of clinical observations (whether reversible or not).

(C) Body weight/body weight change data.

(D) Food consumption and water consumption, if applicable.

(E) Sensory activity, grip strength and motor activity assessments.

(F) Hematological tests with relevant baseline values,

(G) Clinical biochemistry tests with relevant baseline values.

(H) Effects on reproduction, including information on mating/precoital interval, fertility, fecundity and gestation duration.

(I) Effects on offspring, including number of pups born (live and dead), sex ratio, postnatal growth (pup weights) and survival (litter size), gross abnormalities and clinical observations during lactation.

(J) Body weight at termination and organ weight data for the parental animals.

(K) Necropsy data, including number of implantations and number of corpora lutea.

(L) Calculations of pre- and postimplantation loss.

(M) Detailed description of histopathological findings.

(N) Statistical treatment of results, where appropriate.

(vi) Discussion of results.

(vii) Conclusions.

(h) *References.* For additional background information on this test guideline, the following references should be consulted. These references are available for inspection at the TSCA Nonconfidential Information Center, Rm. NE-B607, Environmental Protection Agency, 401 M St., NW., Washington, DC, 12 noon to 4 p.m., Monday through Friday, except legal holidays.

(1) Mitsumori, K., Kodama, Y., Uchida, O., Takada, K., Saito, M. Naito, K., Tanaka, S., Kurokawa, Y., Usami, M., Kawashima, K., Yasuhara, K., Toyoda, K., Onodera, H., Furukawa, F., Takahashi, M. and Hayashi, Y., (1994). Confirmation Study, Using Nitro-Benzene, of the Combined Repeat Dose and Reproductive/ Developmental Toxicity Test Protocol Proposed by the Organization for Economic Cooperation and Development (OECD). *Journal of Toxicology and Science,* 19:141–149.

(2) Tanaka, S., Kawashima, K., Naito, K., Usami, M., Nakadate, M., Imaida, K., Takahashi, M., Hayashi, Y., Kurokawa, Y. and Tobe, M. (1992). Combined Repeat Dose and Reproductive/ Developmental Toxicity Screening Test (OECD): Familiarization Using Cyclophosphamide. *Fundamental and Applied Toxicology,* 18:89–95.

(3) Tupper D.E., Wallace R.B. (1980). Utility of the Neurologic Examination in Rats. *Acta Neurobiological Exposure,* 40:999–1003.

(4) Gad S.C. (1982). A Neuromuscular Screen for Use in Industrial Toxicology. *Journal of Toxicology and Environmental Health,* 9:691–704.

(5) Moser V.C., McDaniel K.M., Phillips P.M. (1991). Rat Strain and Stock Comparisons Using a Functional Observational Battery: Baseline Values and Effects of Amitraz. *Toxicology and Applied Pharmacology,* 108:267–283.

(6) Meyer O.A., Tilson H.A., Byrd W.C., Riley M.T. (1979). A Method for the Routine Assessment of Fore- and Hindlimb Grip Strength of Rats and

Mice. *Neurobehavorial Toxicology*, 1:233–236.

(7) Crofton K.M., Howard J.L., Moser V.C., Gill M.W., Reiter L.W., Tilson H.A., MacPhail R.C. (1991). Interlaboratory Comparison of Motor Activity Experiments: Implication for Neurotoxicological Assessments. *Neurotoxicology and Teratology* 13:599–609.

[65 FR 78793, Dec. 15, 2000]

§ 799.9370 TSCA prenatal developmental toxicity.

(a) *Scope* This section is intended to meet the testing requirements under section 4 of TSCA. This guideline for developmental toxicity testing is designed to provide general information concerning the effects of exposure on the pregnant test animal and on the developing organism; this may include death, structural abnormalities, or altered growth and an assessment of maternal effects. For information on testing for functional deficiencies and other postnatal effects, the guidelines for the two-generation reproductive toxicity study and the developmental neurotoxicity study should be consulted.

(b) *Source.* The source material used in developing this TSCA test guideline is the OPPTS harmonized test guideline 870.3700 (February 1996 Public Draft). This source is available at the address in paragraph (h) of this section.

(c) *Good laboratory practice standards.* The study shall be conducted in compliance with 40 CFR Part 792—Good Laboratory Practice Standards.

(d) *Principle of the test method.* The test substance is administered to pregnant animals at least from implantation to one day prior to the expected day of parturition. Shortly before the expected date of delivery, the pregnant females are terminated, the uterine contents are examined, and the fetuses are processed for visceral and skeletal evaluation.

(e) *Test procedures*—(1) *Animal selection*—(i) *Species and strain.* It is recommended that testing be performed in the most relevant species, and that laboratory species and strains which are commonly used in prenatal developmental toxicity testing be employed. The preferred rodent species is the rat and the preferred non-rodent species is the rabbit.

(ii) *Age.* Young adult animals shall be used.

(iii) *Sex.* Nulliparous female animals shall be used at each dose level. Animals should be mated with males of the same species and strain, avoiding the mating of siblings, if parentage is known. Day 0 in the test is the day on which a vaginal plug and/or sperm are observed in the rodent or that insemination is performed or observed in the rabbit.

(iv) *Number of animals.* Each test and control group shall contain a sufficient number of animals to yield approximately 20 animals with implantation sites at necropsy.

(2) *Administration of test and control substances*—(i) *Dose levels and dose selection.* (A) At least three-dose levels and a concurrent control shall be used. Healthy animals shall be randomly assigned to the control and treatment groups, in a manner which results in comparable mean body weight values among all groups. The dose levels should be spaced to produce a gradation of toxic effects. Unless limited by the physical/chemical nature or biological properties of the test substance, the highest dose shall be chosen with the aim to induce some developmental and/or maternal toxicity but not death or severe suffering. In the case of maternal mortality, this should not be more than approximately 10%. The intermediate dose levels should produce minimal observable toxic effects. The lowest dose level should not produce any evidence of either maternal or developmental toxicity (i.e., the no-observed-adverse-effect level, NOAEL) or should be at or near the limit of detection for the most sensitive endpoint. Two- or four-fold intervals are frequently optimal for spacing the dose levels, and the addition of a fourth test group is often preferable to using very large intervals (e.g., more than a factor of 10) between dosages.

(B) It is desirable that additional information on metabolism and pharmacokinetics of the test substance be available to demonstrate the adequacy of the dosing regimen. This information should be available prior to testing.

(C) The highest dose tested need not exceed 1,000 mg/kg/day by oral or dermal administration, or 2 mg/L (or the maximum attainable concentration) by inhalation, unless potential human exposure data indicate the need for higher doses. If a test performed at the limit dose level, using the procedures described for this study, produces no observable toxicity and if an effect would not be expected based upon data from structurally related compounds, then a full study using three-dose levels may not be considered necessary.

(ii) *Control group.* (A) A concurrent control group shall be used. This group shall be a sham-treated control group or a vehicle-control group if a vehicle is used in administering the test substance.

(B) The vehicle control group should receive the vehicle in the highest volume used.

(C) If a vehicle or other additive is used to facilitate dosing, consideration should be given to the following characteristics: Effects on the absorption, distribution, metabolism, or retention of the test substance; effects on the chemical properties of the test substance which may alter its toxic characteristics; and effects on the food or water consumption or the nutritional status of the animals.

(iii) *Route of administration.* (A) The test substance or vehicle is usually administered orally by intubation.

(B) If another route of administration is used, for example, when the route of administration is based upon the principal route of potential human exposure, the tester shall provide justification and reasoning for its selection, and appropriate modifications may be necessary. Care should be taken to minimize stress on the maternal animals. For materials administered by inhalation, whole-body exposure is preferable to nose-only exposure due to the stress of restraint required for nose-only exposure.

(C) The test substance shall be administered at approximately the same time each day.

(D) When administered by gavage or dermal application, the dose to each animal shall be based on the most recent individual body weight determination.

(iv) *Dosing schedule.* At minimum, the test substance shall be administered daily from implantation to the day before cesarean section on the day prior to the expected day of parturition. Alternatively, if preliminary studies do not indicate a high potential for preimplantation loss, treatment may be extended to include the entire period of gestation, from fertilization to approximately 1 day prior to the expected day of termination.

(f) *Observation of animals*—(1) *Maternal.* (i) Each animal shall be observed at least once daily, considering the peak period of anticipated effects after dosing. Mortality, moribundity, pertinent behavioral changes, and all signs of overt toxicity shall be recorded at this cageside observation. In addition, thorough physical examinations shall be conducted at the same time maternal body weights are recorded.

(ii) Animals shall be weighed on day 0, at termination, and at least at 3-day intervals during the dosing period.

(iii) Food consumption shall be recorded on at least 3-day intervals, preferably on days when body weights are recorded.

(iv) (A) Females shall be terminated immediately prior to the expected day of delivery.

(B) Females showing signs of abortion or premature delivery prior to scheduled termination shall be killed and subjected to a thorough macroscopic examination.

(v) At the time of termination or death during the study, the dam shall be examined macroscopically for any structural abnormalities or pathological changes which may have influenced the pregnancy. Evaluation of the dams during cesarean section and subsequent fetal analyses should be conducted without knowledge of treatment group in order to minimize bias.

(vi) (A) Immediately after termination or as soon as possible after death, the uteri shall be removed and the pregnancy status of the animals ascertained. Uteri that appear nongravid shall be further examined (e.g. by ammonium sulfide staining) to confirm the nonpregnant status.

(B) Each gravid uterus (with cervix) shall be weighed. Gravid uterine weights should not be obtained from

dead animals if autolysis or decomposition has occurred.

(C) The number of corpora lutea shall be determined for pregnant animals.

(D) The uterine contents shall be examined for embryonic or fetal deaths and the number of viable fetuses. The degree of resorption shall be described in order to help estimate the relative time of death of the conceptus.

(2) *Fetal.* (i) The sex and body weight of each fetus shall be determined.

(ii) Each fetus shall be examined for external anomalies.

(iii) Fetuses shall be examined for skeletal and soft tissue anomalies (e.g. variations and malformations or other categories of anomalies as defined by the performing laboratory).

(A) For rodents, approximately one-half of each litter shall be prepared by standard techniques and examined for skeletal alterations, preferably bone and cartilage. The remainder shall be prepared and examined for soft tissue anomalies, using appropriate serial sectioning or gross dissection techniques. It is also acceptable to examine all fetuses by careful dissection for soft tissue anomalies followed by an examination for skeletal anomalies.

(B) For rabbits, all fetuses shall be examined for both soft tissue and skeletal alterations. The bodies of these fetuses should be evaluated by careful dissection for soft-tissue anomalies, followed by preparation and examination for skeletal anomalies. An adequate evaluation of the internal structures of the head, including the eyes, brain, nasal passages, and tongue, should be conducted for at least half of the fetuses.

(g) *Data and reporting*—(1) *Treatment of results.* Data shall be reported individually and summarized in tabular form, showing for each test group the types of change and the number of dams, fetuses, and litters displaying each type of change.

(2) *Evaluation of study results.* The following shall be provided:

(i) Maternal and fetal test results, including an evaluation of the relationship, or lack thereof, between the exposure of the animals to the test substance and the incidence and severity of all findings.

(ii) Criteria used for categorizing fetal external, soft tissue, and skeletal anomalies.

(iii) When appropriate, historical control data to enhance interpretation of study results. Historical data (on litter incidence and fetal incidence within litter), when used, should be compiled, presented, and analyzed in an appropriate and relevant manner. In order to justify its use as an analytical tool, information such as the dates of study conduct, the strain and source of the animals, and the vehicle and route of administration should be included.

(iv) Statistical analysis of the study findings should include sufficient information on the method of analysis, so that an independent reviewer/statistician can reevaluate and reconstruct the analysis. In the evaluation of study data, the litter should be considered the basic unit of analysis.

(v) In any study which demonstrates an absence of toxic effects, further investigation to establish absorption and bioavailability of the test substance should be considered.

(3) *Test report.* In addition to the reporting requirements as specified under 40 CFR part 792, subpart J, the following specific information shall be reported. Both individual and summary data should be presented.

(i) Species and strain.

(ii) Maternal toxic response data by dose, including but not limited to:

(A) The number of animals at the start of the test, the number of animals surviving, the number pregnant, and the number aborting.

(B) Day of death during the study or whether animals survived to termination.

(C) Day of observation of each abnormal clinical sign and its subsequent course.

(D) Body weight and body weight change data, including body weight change adjusted for gravid uterine weight.

(E) Food consumption and, if applicable, water consumption data.

(F) Necropsy findings, including gravid uterine weight.

(iii) Developmental endpoints by dose for litters with implants, including:

(A) Corpora lutea counts.

(B) Implantation data, number and percent of live and dead fetuses, and resorptions (early and late).

(C) Pre- and postimplantation loss calculations.

(iv) Developmental endpoints by dose for litters with live fetuses, including:

(A) Number and percent of live offspring.

(B) Sex ratio.

(C) Fetal body weight data, preferably by sex and with sexes combined.

(D) External, soft tissue, and skeletal malformation and variation data. The total number and percent of fetuses and litters with any external, soft tissue, or skeletal alteration, as well as the types and incidences of individual anomalies, should be reported.

(v) The numbers used in calculating all percentages or indices.

(vi) Adequate statistical treatment of results.

(vii) A copy of the study protocol and any amendments should be included.

(h) *References.* For additional background information on this test guideline, the following references should be consulted. These references are available for inspection at the TSCA Nonconfidential Information Center, Rm. NE-B607, Environmental Protection Agency, 401 M St., SW., Washington, DC, 12 noon to 4 p.m., Monday through Friday, except legal holidays.

(1) Aliverti, V.L. *et al.* The extent of fetal ossification as an index of delayed development in teratogenicity studies in the rat. *Teratology*. 20:237–242 (1979).

(2) Barrow, M.V. and W.J. Taylor. A rapid method for detecting malformations in rat fetuses. *Journal of Morphology* 127:291–306 (1969).

(3) Burdi, A.R. Toluidine blue-alizarin red S staining of cartilage and bone in whole-mount skeltons *in vitro*. *Stain Technolology*. 40:45–48 (1965).

(4) Edwards, J.A. Ed. Woolam,D.H.M. The external development of the rabbit and rat embryo. Vol. 3. *Advances in Teratology* (Academic, NY, 1968).

(5) Fritz, H. Prenatal ossification in rabbits as indicative of fetal maturity. *Teratology*. 11:313–320 (1974).

(6) Fritz, H. and Hess, R. Ossification of the rat and mouse skeleton in the perinatal period. *Teratology*. 3:331–338 (1970).

(7) Gibson, J.P. *et al.* Use of the rabbit in teratogenicity studies. *Toxicology and Applied Pharmacology*. 9:398–408 (1966).

(8) Inouye, M. Differential staining of cartilage and bone in fetal mouse skeleton by alcian blue and alizarin red S. *Congenital Anomalies*. 16(3):171–173 (1976).

(9) Igarashi, E. *et al.* Frequence of spontaneous axial skeletal variations detected by the double staining technique for ossified and cartilaginous skeleton in rat fetuses. *Congenital Anomalies*. 32:381–391 (1992).

(10) Kimmel, C.A. *et al.* Skeletal development following heat exposure in the rat. *Teratology*. 47:229–242 (1993).

(11) Kimmel, C.A. and Francis, E.Z. Proceedings of the workshop on the acceptability and interpretation of dermal developmental toxicity studies. *Fundamental and Applied Toxicology*. 14:386–398 (1990).

(12) Kimmel, C.A. and C. Trammell. A rapid procedure for routine double staining of cartilage and bone in fetal and adult animals. *Stain Technology*. 56:271–273 (1981).

(13) Kimmel, C.A. and Wilson, J.G. Skeletal deviation in rats: malformations or variations? *Teratology*. 8:309–316 (1973).

(14) Marr, M.C. *et al.* Comparison of single and double staining for evaluation of skeletal development: the effects of ethylene glycol (EG) in CD rats. *Teratology*. 37:476 (1988).

(15) Marr, M.C. *et al.* Developmental stages of the CD (Sprague-Dawley) rat skeleton after maternal exposure to ethylene glycol. *Teratology*. 46:169–181 (1992).

(16) McLeod, M.J. Differential staining of cartilage and bone in whole mouse fetuses by Alcian blue and alizarin red S. *Teratology*. 22:299–301 (1980).

(17) Monie, I.W. *et al.* Dissection procedures for rat fetuses permitting alizarin red staining of skeleton and histological study of viscera. *Supplement to Teratology Workshop Manual*. pp. 163–173 (1965).

(18) Organisation for Economic Cooperation and Development, No. 414: Teratogenicity, Guideline for Testing of Chemicals. [C(83)44 (Final)] (1983).

(19) Salewski (Koeln), V.E. Faerbermethode zum makroskopischen

nachweis von implantations stellen am uterus der ratte. *Naunyn-Schmeidebergs Archiv für Pharmakologie und Experimentelle Pathologie.* 247:367 (1964).

(20) Spark, C. and Dawson,A.B. The order and time of appearance of centers of ossification in the fore and hind limbs of the albino rat, with special reference to the possible influence of the sex factor. *American Journal of Anatomy*. 41:411–445 (1928).

(21) Staples, R.E. Detection of visceral alterations in mammalian fetuses. *Teratology*. 9(3):A37–A38 (1974).

(22) Staples, R.E. and Schnell, V.L. Refinements in rapid clearing technique in the KOH—alizarin red S method for fetal bone. *Stain Technology*. 39:61–63 (1964).

(23) Strong, R.M. The order time and rate of ossification of the albino rat (*mus norvegicus albinus*) skeleton. *American Journal of Anatomy*. 36: 313–355 (1928).

(24) Stuckhardt, J.L. and Poppe, S.M. Fresh visceral examination of rat and rabbit fetuses used in teratogenicity testing. *Teratogenesis, Carcinogenesis, and Mutagenesis.* 4:181–188 (1984).

(25) Van Julsingha, E.B. and Bennett,C.G. Eds. Neubert, D., Merker, H.J., and Kwasigroch, T.E. A dissecting procedure for the detection of anomalies in the rabbit foetal head. *Methods in Prenatal Toxicology* (University of Chicago, Chicago, IL, 1977) pp. 126–144.

(26) Whitaker, J. and Dix, D.M. Double-staining for rat foetus skeletons in teratological studies. *Laboratory Animals*. 13:309–310 (1979).

(27) Wilson, J.G. Eds. Wilson, J.G. and Warkany, J. Embryological considerations in teratology. *Teratology: Principles and Techniques* (University of Chicago, Chicago, IL, 1965) pp. 251–277.

§ 799.9380 TSCA reproduction and fertility effects.

(a) *Scope.* This section is intended to meet the testing requirements under section 4 of the TSCA. This section is for two-generation reproduction testing and is designed to provide general information concerning the effects of a test substance on the integrity and performance of the male and female reproductive systems, including gonadal function, the estrous cycle, mating behavior, conception, gestation, parturition, lactation, and weaning, and on the growth and development of the offspring. The study may also provide information about the effects of the test substance on neonatal morbidity, mortality, target organs in the offspring, and preliminary data on prenatal and postnatal developmental toxicity and serve as a guide for subsequent tests. Additionally, since the study design includes *in utero* as well as postnatal exposure, this study provides the opportunity to examine the susceptibility of the immature/neonatal animal.

(b) *Source.* The source material used in developing this TSCA test guideline is the OPPTS harmonized test guideline 870.3800 (February 1996 Public Draft). This source is available at the address in paragraph (g) of this section.

(c) *Good laboratory practice standards.* The study shall be conducted in compliance with 40 CFR part 792—Good Laboratory Practice Standards.

(d) *Principle of the test method.* The test substance is administered to parental (P) animals prior to and during their mating, during the resultant pregnancies, and through the weaning of their F1 offspring. The substance is then administered to selected F1 offspring during their growth into adulthood, mating, and production of an F2 generation, until the F2 generation is weaned.

(e) *Test procedures*—(1) *Animal selection*—(i) *Species and strain.* The rat is the most commonly used species for testing. If another mammalian species is used, the tester shall provide justification/reasoning for its selection, and appropriate modifications will be necessary. Healthy parental animals, which have been acclimated to laboratory conditions for at least 5 days and have not been subjected to previous experimental procedures, should be used. Strains of low fecundity shall not be used.

(ii) *Age.* Parental (P) animals shall be 5 to 9 weeks old at the start of dosing. The animals of all test groups should be of uniform weight, age, and parity as nearly as practicable, and should be representative of the species and strain under study.

(iii) *Sex.* (A) For an adequate assessment of fertility, both males and females shall be studied.

(B) The females shall be nulliparous and nonpregnant.

(iv) *Number of animals.* Each control group shall contain a sufficient number of mating pairs to yield approximately 20 pregnant females. Each test group shall contain a similar number of mating pairs.

(v) *Identification of animals.* Each animal shall be assigned a unique identification number. For the P generation, this should be done before dosing starts. For the F1 generation, this should be done for animals selected for mating; in addition, records indicating the litter of origin shall be maintained for all selected F1 animals.

(2) *Administration of test and control substances*—(i) *Dose levels and dose selection.* (A) At least three-dose levels and a concurrent control shall be used. Healthy animals should be randomly assigned to the control and treatment groups, in a manner which results in comparable mean body weight values among all groups. The dose levels should be spaced to produce a gradation of toxic effects. Unless limited by the physical/chemical nature or biological properties of the test substance, the highest dose should be chosen with the aim to induce some reproductive and/or systemic toxicity but not death or severe suffering. In the case of parental mortality, this should not be more than approximately 10%. The intermediate dose levels should produce minimal observable toxic effects. The lowest dose level should not produce any evidence of either systemic or reproductive toxicity (i.e., the no-observed-adverse-effect level, NOAEL) or should be at or near the limit of detection for the most sensitive endpoint. Two- or four-fold intervals are frequently optimal for spacing the dose levels, and the addition of a fourth test group is often preferable to using very large intervals (e.g., more than a factor of 10) between dosages.

(B) It is desirable that additional information on metabolism and pharmacokinetics of the test substance be available to demonstrate the adequacy of the dosing regimen. This information should be available prior to testing.

(C) The highest dose tested should not exceed 1,000 mg/kg/day (or 20,000 ppm in the diet), unless potential human exposure data indicate the need for higher doses. If a test performed at the limit dose level, using the procedures described for this study, produces no observable toxicity and if an effect would not be expected based upon data from structurally related compounds, then a full study using three dose levels may not be considered necessary.

(ii) *Control group.* (A) A concurrent control group shall be used. This group shall be an untreated or sham treated group or a vehicle-control group if a vehicle is used in administering the test substance.

(B) If a vehicle is used in administering the test substance, the control group shall receive the vehicle in the highest volume used.

(C) If a vehicle or other additive is used to facilitate dosing, consideration should be given to the following characteristics: Effects on the absorption, distribution, metabolism, or retention of the test substance; effects on the chemical properties of the test substance which may alter its toxic characteristics; and effects on the food or water consumption or the nutritional status of the animals.

(D) If a test substance is administered in the diet and causes reduced dietary intake or utilization, the use of a pair-fed control group may be considered necessary.

(iii) *Route of administration.* (A) The test substance is usually administered by the oral route (diet, drinking water, or gavage).

(B) If administered by gavage or dermal application, the dosage administered to each animal prior to mating and during gestation and lactation shall be based on the individual animal body weight and adjusted weekly at a minimum.

(C) If another route of administration is used, for example, when the route of administration is based upon the principal route of potential human exposure, the tester should provide justification and reasoning for its selection, and appropriate modifications may be necessary. Care should be taken to minimize stress on the maternal animals and their litters during gestation and lactation.

(D) All animals should be dosed by the same method during the appropriate experimental period.

(iv) *Dosing schedule.* (A) The animals should be dosed with the test substance on a 7-days-a-week basis.

(B) Daily dosing of the parental (P) males and females shall begin when they are 5 to 9 weeks old. Daily dosing of the F1 males and females shall begin at weaning. For both sexes (P and F1), dosing shall be continued for at least 10 weeks before the mating period.

(C) Daily dosing of the P and F1 males and females shall continue until termination.

(3) *Mating procedure*—(i) *Parental.* (A) For each mating, each female shall be placed with a single randomly selected male from the same dose level (1:1 mating) until evidence of copulation is observed or either 3 estrous periods or 2 weeks has elapsed. Animals should be separated as soon as possible after evidence of copulation is observed. If mating has not occurred after 2 weeks or 3 estrous periods, the animals should be separated without further opportunity for mating. Mating pairs should be clearly identified in the data.

(B) Vaginal smears shall be collected daily and examined for all females during mating, until evidence of copulation is observed.

(C) Each day, the females shall be examined for presence of sperm or vaginal plugs. Day 0 of pregnancy is defined as the day a vaginal plug or sperm are found.

(ii) *F1 mating.* For mating the F1 offspring, at least one male and one female should be randomly selected from each litter for mating with another pup of the same dose level but different litter, to produce the F2 generation.

(iii) *Second mating.* In certain instances, such as poor reproductive performance in the controls, or in the event of treatment-related alterations in litter size, the adults may be remated to produce an F1b or F2b litter. If production of a second litter is deemed necessary in either generation, the dams should be remated approximately 1–2 weeks following weaning of the last F1a or F2a litter.

(iv) *Special housing.* After evidence of copulation, animals that are presumed to be pregnant shall be caged separately in delivery or maternity cages. Pregnant animals shall be provided with nesting materials when parturition is near.

(v) *Standardization of litter sizes.* (A) Animals should be allowed to litter normally and rear their offspring to weaning. Standardization of litter sizes is optional.

(B) If standardization is performed, the following procedure should be used. On day 4 after birth, the size of each litter may be adjusted by eliminating extra pups by random selection to yield, as nearly as possible, four males and four females per litter or five males and five females per litter. Selective elimination of pups, i.e. based upon body weight, is not appropriate. Whenever the number of male or female pups prevents having four (or five) of each sex per litter, partial adjustment (for example, five males and three females, or four males and six females) is acceptable. Adjustments are not appropriate for litters of eight pups or less.

(4) *Observation of animals*—(i) *Parental.* (A) Throughout the test period, each animal shall be observed at least once daily, considering the peak period of anticipated effects after dosing. Mortality, moribundity, pertinent behavioral changes, signs of difficult or prolonged parturition, and all signs of overt toxicity shall be recorded at this cageside examination. In addition, thorough physical examinations should be conducted weekly on each animal.

(B) Parental animals (P and F1) shall be weighed on the first day of dosing and weekly thereafter. Parental females (P and F1) should be weighed at a minimum on approximately gestation days 0, 7, 14, and 21, and during lactation on the same days as the weighing of litters.

(C) During the premating and gestation periods, food consumption shall be measured weekly at a minimum. Water consumption should be measured weekly at a minimum if the test substance is administered in the water.

(D) Estrous cycle length and pattern should be evaluated by vaginal smears for all P and F1 females during a minimum of 3 weeks prior to mating and throughout cohabitation; care should

be taken to prevent the induction of pseudopregnancy.

(E) For all P and F1 males at termination, sperm from one testis and one epididymis shall be collected for enumeration of homogenization-resistant spermatids and cauda epididymal sperm reserves, respectively. In addition, sperm from the cauda epididymis (or vas deferens) should be collected for evaluation of sperm motility and sperm morphology.

(*1*) The total number of homogenization-resistant testicular sperm and cauda epididymal sperm should be enumerated. The method described in the reference under paragraph (g)(8) of this section may be used. Cauda sperm reserves can be derived from the concentration and volume of sperm in the suspension used to complete the qualitative evaluations, and the number of sperm recovered by subsequent mincing and/or homogenizing of the remaining cauda tissue. Enumeration in only control and high-dose P and F1 males may be performed unless treatment-related effects are observed; in that case, the lower dose groups should also be evaluated.

(*2*) An evaluation of epididymal (or vas deferens) sperm motility should be performed. Sperm should be recovered while minimizing damage (the evaluation techniques as described in the reference under paragraph (g)(8) of this section may be used), and the percentage of progressively motile sperm should be determined either subjectively or objectively. For objective evaluations, an acceptable counting chamber of sufficient depth can be used to effectively combine the assessment of motility with sperm count and sperm morphology. When computer-assisted motion analysis is performed, the derivation of progressive motility relies on user-defined thresholds for average path velocity and straightness or linear index. If samples are videotaped, or images otherwise recorded, at the time of necropsy, subsequent analysis of only control and high-dose P and F1 males may be performed unless treatment-related effects are observed; in that case, the lower dose groups should also be evaluated. In the absence of a video or digital image, all samples in all treatment groups should be analyzed at necropsy.

(*3*) A morphological evaluation of an epididymal (or vas deferens) sperm sample shall be performed. Sperm (at least 200 per sample) should be examined as fixed, wet preparations (the techniques for such examinations is described in the references under paragraphs (g)(4) and (g)(8) of this section may be used) and classified as either normal (both head and midpiece/tail appear normal) or abnormal. Examples of morphologic sperm abnormalities would include fusion, isolated heads, and misshapen heads and/or tails. Evaluation of only control and high-dose P and F1 males may be performed unless treatment-related effects are observed; in that case, the lower dose groups should also be evaluated.

(ii) *Offspring.* (A) Each litter should be examined as soon as possible after delivery (lactation day 0) to establish the number and sex of pups, stillbirths, live births, and the presence of gross anomalies. Pups found dead on day 0 should be examined for possible defects and cause of death.

(B) Live pups should be counted, sexed, and weighed individually at birth, or soon thereafter, at least on days 4, 7, 14, and 21 of lactation, at the time of vaginal patency or balanopreputial separation, and at termination.

(C) The age of vaginal opening and preputial separation should be determined for F1 weanlings selected for mating. If there is a treatment-related effect in F1 sex ratio or sexual maturation, anogenital distance should be measured on day 0 for all F2 pups.

(5) *Termination schedule.* (i) All P and F1 adult males and females should be terminated when they are no longer needed for assessment of reproductive effects.

(ii) F1 offspring not selected for mating and all F2 offspring should be terminated at comparable ages after weaning.

(6) *Gross necropsy*. (i) At the time of termination or death during the study, all parental animals (P and F1) and when litter size permits at least three pups per sex per litter from the unselected F1 weanlings and the F2 weanlings shall be examined

macroscopically for any structural abnormalities or pathological changes. Special attention shall be paid to the organs of the reproductive system.

(ii) Dead pups or pups that are terminated in a moribund condition should be examined for possible defects and/or cause of death.

(iii) At the time of necropsy, a vaginal smear should be examined to determine the stage of the estrous cycle. The uteri of all cohabited females should be examined, in a manner which does not compromise histopathological evaluation, for the presence and number of implantation sites.

(7) *Organ weights.* (i) At the time of termination, the following organs of all P and F1 parental animals shall be weighed:

(A) Uterus (with oviducts and cervix), ovaries.

(B) Testes, epididymides (total weights for both and cauda weight for either one or both), seminal vesicles (with coagulating glands and their fluids), and prostate.

(C) Brain, pituitary, liver, kidneys, adrenal glands, spleen, and known target organs.

(ii) For F1 and F2 weanlings that are examined macroscopically, the following organs shall be weighed for one randomly selected pup per sex per litter.

(A) Brain.

(B) Spleen and thymus.

(8) *Tissue preservation.* The following organs and tissues, or representative samples thereof, shall be fixed and stored in a suitable medium for histopathological examination.

(i) For the parental (P and F1) animals:

(A) Vagina, uterus with oviducts, cervix, and ovaries.

(B) One testis (preserved in Bouins fixative or comparable preservative), one epididymis, seminal vesicles, prostate, and coagulating gland.

(C) Pituitary and adrenal glands.

(D) Target organs, when previously identified, from all P and F1 animals selected for mating.

(E) Grossly abnormal tissue.

(ii) For F1 and F2 weanlings selected for macroscopic examination: Grossly abnormal tissue and target organs, when known.

(9) *Histopathology*—(i) *Parental animals.* Full histopathology of the organs listed in paragraph (e)(8)(i) of this section shall be performed for ten randomly chosen high dose and control P and F1 animals per sex, for those animals that were selected for mating. Organs demonstrating treatment-related changes shall also be examined for the remainder of the high-dose and control animals and for all parental animals in the low- and mid-dose groups. Additionally, reproductive organs of the low- and mid-dose animals suspected of reduced fertility, e.g., those that failed to mate, conceive, sire, or deliver healthy offspring, or for which estrous cyclicity or sperm number, motility, or morphology were affected, shall be subjected to histopathological evaluation. Besides gross lesions such as atrophy or tumors, testicular histopathological examination should be conducted in order to identify treatment-related effects such as retained spermatids, missing germ cell layers or types, multinucleated giant cells, or sloughing of spermatogenic cells into the lumen. Examination of the intact epididymis should include the caput, corpus, and cauda, which can be accomplished by evaluation of a longitudinal section, and should be conducted in order to identify such lesions as sperm granulomas, leukocytic infiltration (inflammation), aberrant cell types within the lumen, or the absence of clear cells in the cauda epididymal epithelium. The postlactational ovary should contain primordial and growing follicles as well as the large corpora lutea of lactation. Histopathological examination should detect qualitative depletion of the primordial follicle population. A quantitative evaluation of primordial follicles should be conducted for all F1 females; the number of animals, ovarian section selection, and section sample size should be statistically appropriate for the evaluation procedure used. Examination should include enumeration of the number of primordial follicles, which can be combined with small growing follicles (see paragraphs (g)(1) and (g)(2) of this section), for comparison of treated and control ovaries.

(ii) *Weanling.* For F1 and F2 weanlings, histopathological examination of treatment-related abnormalities noted in macroscopic examination should be considered, if such evaluation were deemed appropriate and would contribute to the interpretation of the study data.

(f) *Data and reporting*—(1) *Treatment of results.* Data shall be reported individually and summarized in tabular form, showing for each test group the types of change and the number of animals displaying each type of change.

(2) *Evaluation of study results.* (i) An evaluation of test results, including the statistical analysis, shall be provided. This should include an evaluation of the relationship, or lack thereof, between the exposure of the animals to the test substance and the incidence and severity of all abnormalities.

(ii) When appropriate, historical control data should be used to enhance interpretation of study results. Historical data, when used, should be compiled, presented, and analyzed in an appropriate and relevant manner. In order to justify its use as an analytical tool, information such as the dates of study conduct, the strain and source of the animals, and the vehicle and route of administration should be included.

(iii) Statistical analysis of the study findings should include sufficient information on the method of analysis, so that an independent reviewer/statistician can reevaluate and reconstruct the analysis.

(iv) In any study which demonstrates an absence of toxic effects, further investigation to establish absorption and bioavailability of the test substance should be considered.

(3) *Test report.* In addition to the reporting requirements as specified under 40 CFR part 792, subpart J, the following specific information shall be reported. Both individual and summary data should be presented.

(i) Species and strain.

(ii) Toxic response data by sex and dose, including indices of mating, fertility, gestation, birth, viability, and lactation; offspring sex ratio; precoital interval, including the number of days until mating and the number of estrous periods until mating; and duration of gestation calculated from day 0 of pregnancy. The report should provide the numbers used in calculating all indices.

(iii) Day (week) of death during the study or whether animals survived to termination; date (age) of litter termination.

(iv) Toxic or other effects on reproduction, offspring, or postnatal growth.

(v) Developmental milestone data (mean age of vaginal opening and preputial separation, and mean anogenital distance, when measured).

(vi) Number of P and F1 females cycling pattern and mean estrous cycle length.

(vii) Day (week) of observation of each abnormal sign and its subsequent course.

(viii) Body weight and body weight change data by sex for P, F1, and F2 animals.

(ix) Food (and water, if applicable) consumption, food efficiency (body weight gain per gram of food consumed), and test material consumption for P and F1 animals, except for the period of cohabitation.

(x) Total cauda epididymal sperm number, homogenization-resistant testis spermatid number, number and percent of progressively motile sperm, number and percent of morphologically normal sperm, and number and percent of sperm with each identified anomaly.

(xi) Stage of the estrous cycle at the time of termination for P and F1 parental females.

(xii) Necropsy findings.

(xiii) Implantation data and postimplantation loss calculations for P and F1 parental females.

(xiv) Absolute and adjusted organ weight data.

(xv) Detailed description of all histopathological findings.

(xvi) Adequate statistical treatment of results.

(xvii) A copy of the study protocol and any amendments should be included.

(g) *References.* For additional backgound information on this test guideline, the following references should be consulted. These references are available for inspection at the TSCA Nonconfidential Information Center, Rm. NE-B607, Environmental Protection Agency, 401 M St., SW.,

Washington, DC, 12 noon to 4 p.m., Monday through Friday, except legal holidays.

(1) Gray, L.E. *et al.* A dose-response analysis of methoxychlor-induced alterations of reproductive development and function in the rat. *Fundamental and Applied Toxicology*. 12:92–108 (1989).

(2) Heindel, J.J. *et al.* Ed. Hirshfield, A.N. Histological assessment of ovarian follicle number in mice as a screen of ovarian toxicity. *Growth Factors and the Ovary* (Plenum, NY, 1989) pp. 421–426.

(3) Korenbrot, C.C. *et al.* Preputial separation as an external sign of pubertal development in the male rat. *Biology of Reproduction*. 17:298–303 (1977).

(4) Linder, R.E. *et al.* Endpoints of spermatoxicity in the rat after short duration exposures to fourteen reproductive toxicants. *Reproductive Toxicology*. 6:491–505 (1992).

(5) Manson, J.M. and Kang, Y.J. Ed. Hayes, A.W. Test methods for assessing female reproductive and developmental toxicology. *Principles and Methods of Toxicology* (Raven, NY, 1989).

(6) Organisation for Economic Co-operation and Development, No. 416: Two Generation Reproduction Toxicity Study, Guidelines for Testing of Chemicals. [C(83)44 (Final)] (1983).

(7) Pederson, T. and Peters, H. Proposal for classification of oocytes and follicles in the mouse ovary. *Journal of Reproduction and Fertility*. 17:555–557 (1988).

(8) Seed, J., Chapin, R.E. E.D. Clegg, L.A. Dostal, R.H. Foote, M.E. Hurtt, G.R. Klinefelter, S.L. Makris, S.D. Perreault, S. Schrader, D. Seyler, R. Sprando, K.A. Treinen, D.N.R. Veeramachaneni, and Wise, L.D. Methods for assessing sperm motility, morphology, and counts in the rat, rabbit, and dog: a consensus report. *Reproductive Toxicology*. 10(3):237–244 (1996).

(9) Smith, B.J. *et al.* Comparison of random and serial sections in assessment of ovarian toxicity. *Reproductive Toxicology*. 5:379–383 (1991).

(10) Thomas, J.A. Eds. M.O. Amdur, J. Doull, and C.D. Klaassen. Toxic responses of the reproductive system. *Casarett and Doull's Toxicology* (Pergamon, NY, 1991).

(11) Working, P.K. and Hurtt, M. Computerized videomicrographic analysis of rat sperm motility. *Journal of Andrology*. 8:330–337 (1987).

(12) Zenick, H. *et al.* Ed. Hayes, A.W. Assessment of male reproductive toxicity: a risk assessment approach. *Principles and Methods of Toxicology* (Raven, NY, 1994).

[62 FR 43824, Aug. 15, 1997, as amended at 64 FR 35078, June 30, 1999]

§ 799.9410 TSCA chronic toxicity.

(a) *Scope*—(1) *Applicability*. This section is intended to meet the testing requirement of the Toxic Substances Control Act (TSCA) (15 U.S.C. 2601).

(2) *Source.* The source material used in developing this TSCA test guideline is the Office of Prevention, Pesticides and Toxic Substances (OPPTS) harmonized test guideline 870.4100 (August 1998, final guidelines). This source is available at the address in paragraph (h) of this section

(b) *Purpose.* The objective of a chronic toxicity study is to determine the effects of a substance in a mammalian species following prolonged and repeated exposure. A chronic toxicity study should generate data from which to identify the majority of chronic effects and to define long-term dose-response relationships. The design and conduct of chronic toxicity tests should allow for the detection of general toxic effects, including neurological, physiological, biochemical, and hematological effects and exposure-related morphological (pathological) effects.

(c) *Definitions.* The definitions in section 3 of TSCA and in 40 CFR Part 792—Good Laboratory Practice Standards apply to this section. The following definitions also apply to this section.

Chronic toxicity is the adverse effects occurring as a result of the repeated daily exposure of experimental animals to a chemical by the oral, dermal, or inhalation routes of exposure.

Cumulative toxicity is the adverse effects of repeated doses occurring as a result of prolonged action on, or increased concentration of, the administered test substance or its metabolites in susceptible tissue.

Dose in a chronic toxicity study is the amount of test substance administered daily via the oral, dermal or inhalation routes for a period of at least 12

months. Dose is expressed as weight of the test substance (grams, milligrams) per unit body weight of test animal (milligram per kilogram), or as weight of the test substance in parts per million (ppm) in food or drinking water per day. For inhalation exposure, dose is expressed as weight of the test substance per unit volume of air (milligrams per liter) or as parts per million per day. For dermal exposure, dose is expressed as weight of the test substance (grams, milligrams) per unit body weight of the test animal (milligrams per kilogram) or as weight of the substance per unit of surface area (milligrams per square centimeter) per day.

No-observed-effects level (NOEL) is the maximum dose used in a study which produces no adverse effects. The NOEL is usually expressed in terms of the weight of a test substance given daily per unit weight of test animal (milligrams per kilogram per day).

Target organ is any organ of a test animal showing evidence of an effect induced by a test substance.

(d) *Limit test.* If a test at one dose level of at least 1,000 mg/kg body weight (expected human exposure may indicate the need for a higher dose level), using the procedures described for this study, produces no observable toxic effects and if toxicity would not be expected based upon data of structurally related compounds, a full study using three dose levels might not be necessary.

(e) *Test procedures*—(1) *Animal selection*—(i) *Species and strain.* Testing should be performed with two mammalian species, one a rodent and the other a nonrodent. The rat is the preferred rodent species. Commonly used laboratory strains must be employed.

(ii) *Age/weight.* (A) Testing must be started with young healthy animals as soon as possible after weaning and acclimatization.

(B) Dosing of rodents should generally begin no later than 8 weeks of age.

(C) Dosing of non-rodents should begin between 4 and 6 months of age and in no case later than 9 months of age.

(D) At commencement of the study, the weight variation of animals used should be within 20% of the mean weight for each sex.

(E) Studies using prenatal or neonatal animals may be recommended under special conditions.

(iii) *Sex.* (A) Equal numbers of animals of each sex should be used at each dose level.

(B) Females should be nulliparous and nonpregnant.

(iv) *Numbers.* (A) For rodents, at least 40 animals (20 males and 20 females) and for nonrodents at least 8 animals (4 females and 4 males) should be used at each dose level and concurrent control group.

(B) If interim sacrifices are planned, the number should be increased by the number of animals scheduled to be sacrificed during the course of the study.

(C) The number of animals at the termination of the study must be adequate for a meaningful and valid statistical evaluation of chronic effects. The Agency must be notified if excessive early deaths or other problems are encountered that might compromise the integrity of the study.

(D) To avoid bias, the use of adequate randomization procedures for the proper allocation of animals to test and control groups is required.

(E) Each animal should be assigned a unique identification number. Dead animals, their preserved organs and tissues, and microscopic slides should be identified by reference to the unique numbers assigned.

(v) *Husbandry.* (A) Rodents may be group-caged by sex, but the number of animals per cage must not interfere with clear observation of each animal. The biological properties of the test substance or toxic effects (e.g., morbidity, excitability) may indicate a need for individual caging. Rodents should be housed individually in dermal studies and during exposure in inhalation studies. Caging should be appropriate to the nonrodent species.

(B) The temperature of the experimental animal rooms should be at 22 ±3 °C.

(C) The relative humidity of the experimental animal rooms should be 50 ±20%.

(D) Where lighting is artificial, the sequence should be 12 hours light/12 hours dark.

(E) Control and test animals should be fed from the same batch and lot. The feed should be analyzed to assure adequacy of nutritional requirements of the species tested and for impurities that might influence the outcome of the test. Animals should be fed and watered ad libitum with food replaced at least weekly.

(F) The study should not be initiated until animals have been allowed a period of acclimatization/quarantine to environmental conditions, nor should animals from outside sources be placed on test without an adequate period of quarantine. An acclimation period of at least 5 days is recommended.

(2) *Control and test substances.* (i) Where necessary, the test substance is dissolved or suspended in a suitable vehicle. If a vehicle or diluent is needed it should not elicit toxic effects itself nor substantially alter the chemical or toxicological properties of the test substance. It is recommended that wherever possible the use of an aqueous solution be the first choice, followed by consideration of solution in oil, and finally, solution in other vehicles.

(ii) One lot of the test substance should be used, if possible, throughout the duration of the study, and the research sample should be stored under conditions that maintain its purity and stability. Prior to the initiation of the study, there should be a characterization of the test substance, including the purity of the test compound, and, if technically feasible, the names and quantities of contaminants and impurities.

(iii) If the test or control substance is to be incorporated into feed or another vehicle, the period during which the test substance is stable in such a mixture should be determined prior to the initiation of the study. Its homogeneity and concentration should be determined prior to the initiation of the study and periodically during the study. Statistically randomized samples of the mixture should be analyzed to ensure that proper mixing, formulation, and storage procedures are being followed, and that the appropriate concentration of the test or control substance is contained in the mixture.

(3) *Control groups.* A concurrent control group is required. This group should be an untreated or sham-treated control group or, if a vehicle is used in administering the test substance, a vehicle control group. If the toxic properties of the vehicle are not known or cannot be made available, both untreated and vehicle control groups are required.

(4) *Satellite group.* A satellite group of 40 animals (20 animals per sex) for rodents and 8 animals (4 animals per sex) for nonrodents may be treated with the high-dose level for 12 months and observed for reversibility, persistence, or delayed occurrence of toxic effects for a post-treatment of appropriate length, normally not less than 28 days. In addition, a control group of 40 animals (20 animals per sex) for rodents and 8 animals (4 animals per sex) for nonrodents should be added to the satellite study.

(5) *Dose levels and dose selections.* (i) In chronic toxicity tests, it is desirable to determine a dose-response relationship as well as a NOEL. Therefore, at least three dose levels with a control group and, where appropriate, a vehicle control (corresponding to the concentration of the vehicle at the highest exposure level) should be used. Dose levels should be spaced to produce a gradation of effects. A rationale must be provided for the doses selected.

(ii) The highest-dose level should elicit signs of toxicity without substantially altering the normal life span of the animal. The highest dose should be determined based on the findings from a 90-day study to ensure that the dose used is adequate to assess the chronic toxicity of the test substance. Thus, the selection of the highest dose to be tested is dependent upon changes observed in several toxicological parameters in subchronic studies. The highest dose tested need not exceed 1,000 mg/kg/day. If dermal application of the test substance produces severe skin irritation, then it may be necessary either to terminate the study and choose a lower high-dose level or to reduce the dose level. Gross criteria for defining severe irritation would include ulcers, fissures, exudate/crust(eschar), dead tissue, or anything leading to destruction of the functional integrity of the epidermis (e.g. caking,

open sores, fissuring, eschar). Histological criteria for defining severe irritation would include follicular and interfollicular crust, microulcer, mild/moderate degeneration/necrosis, moderate/marked epidermal edema, marked dermal edema, and marked inflammation.

(iii) The intermediate dose levels should be spaced to produce a gradation of toxic effects.

(iv) The lowest-dose level should produce no evidence of toxicity.

(6) *Administration of the test substance.* The three main routes of administration are oral, dermal, and inhalation. The choice of the route of administration depends upon the physical and chemical characteristics of the test substance and the form typifying exposure in humans.

(i) *Oral studies.* Ideally, the animals should be dosed by gavage or with capsules on a 7-day per week basis for a period of at least 12 months. However, based primarily on practical considerations, dosing by gavage or capsules on a 5-day per week schedule is acceptable. If the test substance is administered via in the drinking water or mixed in the diet, exposure should be on a 7-day per week basis.

(ii) *Dermal studies.* (A) Preparation of animal skin. Shortly before testing, fur should be clipped from not less than 10% of the body surface area for application of the test substance. In order to dose approximately 10% of the body surface, the area starting at the scapulae (shoulders) to the wing of the ileum (hipbone) and half way down the flank on each side of the animal should be shaved. Shaving should be carried out approximately 24 hours before dosing. Repeated clipping or shaving is usually needed at approximately weekly intervals. When clipping or shaving the fur, care should be taken to avoid abrading the skin which could alter its permeability.

(B) Preparation of test substance. Liquid test substances are generally used undiluted, except as indicated in paragraph (e)(5)(ii) of this section. Solids should be pulverized when possible. The substance should be moistened sufficiently with water or, when necessary, with a suitable vehicle to ensure good contact with the skin. When a vehicle is used, the influence of the vehicle on toxicity of, and penetration of the skin by, the test substance should be taken into account. The volume of application should be kept constant, e.g., less than 100 µL for the mouse and less than 300 µL for the rat. Different concentrations of test solution should be prepared for different dose levels.

(C) Administration of test substance. The duration of exposure should be at least for 12 months. Ideally, the animals should be treated with test substance for at least 6 hours per day on a 7-day per week basis. However, based on practical considerations, application on a 5-day per week basis is acceptable. Dosing should be conducted at approximately the same time each day. The test substance should be applied uniformly over the treatment site. The surface area covered may be less for highly toxic substances. As much of the area should be covered with as thin and uniform a film as possible. For rats, the test substance may be held in contact with the skin with a porous gauze dressing and nonirritating tape if necessary. The test site should be further covered in a suitable manner to retain the gauze dressing plus test substance and to ensure that the animals cannot ingest the test substance. The application site should not be covered when the mouse is the species of choice. The test substance may be wiped from the skin after the six-hour exposure period to prevent ingestion.

(iii) *Inhalation studies.* (A) The animals should be exposed to the test substance for 6 hours per day on a 7-day per week basis, for a period of at least 12 months. However, based primarily on practical considerations, exposure for 6 hours per day on a 5-day per week basis is acceptable.

(B) The animals should be tested in dynamic inhalation equipment designed to sustain a minimum air flow of 10 air changes per hour, an adequate oxygen content of at least 19%, and uniform conditions throughout the exposure chamber. Maintenance of slight negative pressure inside the chamber will prevent leakage of the test substance into surrounding areas. It is not

normally necessary to measure chamber oxygen concentration if airflow is adequate.

(C) The selection of a dynamic inhalation chamber should be appropriate for the test substance and test system. When a whole body chamber is used, individual housing must be used to minimize crowding of the test animals and maximize their exposure to the test substance. To ensure stability of a chamber atmosphere, the total volume occupied by the test animals should not exceed 5% of the volume of the test chamber. It is recommended, but not required, that nose-only or head-only exposure be used for aerosol studies in order to minimize oral exposures due to animals licking compound off their fur. The animals should be acclimated and heat stress minimized.

(D) The temperature at which the test is performed should be maintained at 22 ±2 °C. The relative humidity should be maintained between 40–60%, but in certain instances (e.g., use of water vehicle) this may not be practicable.

(E) The rate of air flow should be monitored continuously but recorded at least three times during the exposure.

(F) Temperature and humidity should be monitored continuously but should be recorded at least every 30 min.

(G) The actual concentrations of the test substance should be measured in the breathing zone. During the exposure period, the actual concentrations of the test substance should be held as constant as practicable, monitored continuously or intermittently depending on the method of analysis. Chamber concentration may be measured using gravimetric or analytical methods, as appropriate. If trial run measurements are reasonably consistent (±10% for liquid aerosol, gas, or vapor; ±20% for dry aerosol), then two measurements should be sufficient. If measurements are not consistent, three to four measurements should be taken. If there is some difficulty measuring chamber analytical concentration due to precipitation, nonhomogeneous mixtures, volatile components, or other factors, additional analysis of inert components may be necessary.

(H) During the development of the generating system, particle size analysis should be performed to establish the stability of aerosol concentrations with respect to particle size. The mass median aerodynamic diameter (MMAD) particle size range should be between 1–3 µm. The particle size of hygroscopic materials should be small enough when dry to assure that the size of the swollen particle will still be within the 1–3 µm range. Measurements of aerodynamic particle size in the animal's breathing zone should be measured during a trial run. If MMAD values for each exposure level are within 10% of each other, then two measurements during the exposures should be sufficient. If pretest measurements are not within 10% of each other, three to four measurements should be taken.

(I) Feed should be withheld during exposure. Water may also be withheld during exposure.

(7) *Observation period.* (i) Animals should be observed for a period of at least 12 months.

(ii) Animals in a satellite group (if used) scheduled for follow-up observations should be kept for at least 28 days further without treatment to detect recovery from, or persistence of, toxic effects.

(8) *Observation of animals.* (i) Observations should be made at least twice each day for morbidity and mortality. Appropriate actions should be taken to minimize loss of animals to the study (e.g., necropsy or refrigeration of those animals found dead and isolation or sacrifice of weak or moribund animals). General clinical observations should be made at least once a day, preferably at the same time each day, taking into consideration the peak period of anticipated effects after dosing. The clinical condition of the animal should be recorded.

(ii) A careful clinical examination should be made at least once prior to the initiation of treatment (to allow for within subject comparisons) and once weekly during treatment in all animals. These observations should be made outside the home cage, preferably in a standard arena, and at similar times on each occasion. Effort should be made to ensure that variations in the observation conditions

are minimal. Observations should be detailed and carefully recorded, preferably using scoring systems, explicitly defined by the testing laboratory. Signs noted should include, but not be limited to, changes in skin, fur, eyes, mucous membranes, occurrence of secretions and excretions and autonomic activity (e.g., lacrimation, piloerection, pupil size, unusual respiratory pattern). Changes in gait, posture and response to handling as well as the presence of clonic or tonic movements, stereotypies (e.g., excessive grooming, repetitive circling) or bizarre behavior (e.g., self-mutilation, walking backwards) should be recorded.

(iii) Once, near the end of the first year of the exposure period and in any case not earlier than in month 11, assessment of motor activity, grip strength, and sensory reactivity to stimuli of different types (e.g., visual, auditory, and proprioceptive stimuli) should be conducted in rodents. Further details of the procedures that could be followed are described in the references listed under paragraphs (h)(2), (h)(7), (h)(8), and (h)(11) of this section.

(iv) Functional observations conducted towards the end of the study may be omitted when data on functional observations are available from other studies and the daily clinical observations did not reveal any functional deficits.

(v) Exceptionally, functional observations may be omitted for groups that otherwise reveal signs of toxicity to an extent that would significantly interfere with functional test performance.

(vi) Body weights should be recorded individually for all animals once prior to the administration of the test substance, once a week during the first 13 weeks of study and at least once every 4 weeks thereafter, unless signs of clinical toxicity suggest more frequent weighing to facilitate monitoring of health status.

(vii) Measurements of feed consumption should be determined weekly during the first 13 weeks of the study and at approximately monthly intervals thereafter unless health status or body weight changes dictate otherwise. Measurements of water consumption should be determined at the same intervals if the test substance is administered in the drinking water.

(viii) Moribund animals should be removed and sacrificed when noticed and the time of death should be recorded as precisely as possible. All survivors should be sacrificed at the end of the study period.

(9) *Clinical pathology*. Hematology, clinical chemistry, and urinalysis should be performed on 10 rats per sex per group, and on all nonrodents. In rodents, the parameters should be examined at approximately 6 month intervals during the conduct of the study and at termination. If possible, these collections should be from the same animals at each interval. In nonrodents, the parameters should be examined once or twice prior to initiation of treatment, at 6-month intervals during the conduct of the study, and at termination. If hematological and biochemical effects were seen in the subchronic study, testing should also be performed at 3 months. Overnight fasting of animals prior to blood sampling is recommended.

(i) *Hematology*. The recommended parameters are red blood cell count, hemoglobin concentration, hematocrit, mean corpuscular volume, mean corpuscular hemoglobin, and mean corpuscular hemoglobin concentration, white blood cell count, differential leukocyte count, platelet count, and a measure of clotting potential, such as prothrombin time or activated partial thromboplastin time.

(ii) *Clinical chemistry*. (A) Parameters which are considered appropriate to all studies are electrolyte balance, carbohydrate metabolism, and liver and kidney function. The selection of specific tests will be influenced by observations on the mode of action of the substance and signs of clinical toxicity.

(B) The recommended clinical chemistry determinations are potassium, sodium, calcium (nonrodent), phosphorus (nonrodent), chloride (nonrodent), glucose, total cholesterol, urea nitrogen, creatinine, total protein, total bilirubin (nonrodent), and albumin. More than two hepatic enzymes, (such as alanine aminotransferase, aspartate aminotransferase, alkaline phosphatase, sorbitol dehydrogenase, or

gamma glutamyl transpeptidase) should also be measured. Measurements of additional enzymes (of hepatic or other origin) and bile acids, may also be useful.

(C) If a test chemical has an effect on the hematopoietic system, reticulocyte counts and bone marrow cytology may be indicated.

(D) Other determinations that should be carried out if the test chemical is known or suspected of affecting related measures include calcium, phosphorus, fasting triglycerides, hormones, methemoglobin, and cholinesterases.

(iii) *Urinalysis.* Urinalysis for rodents should be performed at the end of the study using timed urine collection. Urinalysis for nonrodents should be performed prior to treatment, midway through treatment and at the end of the study using timed urine collection. Urinalysis determinations include: appearance, volume, osmolality or specific gravity, pH, protein, glucose, and blood/blood cells.

(10) *Ophthalmological examination.* Examinations should be made of all animals using an ophthalmoscope or equivalent device prior to the administration of the test substance and at termination of the study on 10 rats of each sex in the high-dose and control groups and preferably in all nonrodents, but at least the control and high-dose groups should be examined. If changes in eyes are detected, all animals should be examined.

(11) *Gross necropsy.* (i) All animals should be subjected to a full gross necropsy which includes examination of the external surface of the body, all orifices, and the cranial, thoracic and abdominal cavities and their contents.

(ii) At least the liver, kidneys, adrenals, testes, epididymides, ovaries, uterus, nonrodent thyroid (with parathyroid), spleen, brain, and heart should be weighed wet as soon as possible after dissection to avoid drying. The lungs should be weighed if the test substance is administered by the inhalation route.

(iii) The following organs and tissues, or representative samples thereof, should be preserved in a suitable medium for possible future histopathological examination:

(A) Digestive system—salivary glands, esophagus, stomach, duodenum, jejunum, ileum, cecum, colon, rectum, liver, pancreas, gallbladder (when present).

(B) Nervous system—brain (multiple sections, including cerebrum, cerebellum and medulla/pons), pituitary, peripheral nerve (sciatic or tibial, preferably in close proximity to the muscle), spinal cord (three levels, cervical, mid-thoracic and lumbar), eyes (retina, optic nerve).

(C) Glandular system—adrenals, parathyroid, thyroid.

(D) Respiratory system—trachea, lungs, pharynx, larynx, nose.

(E) Cardiovascular/hematopoietic system—aorta, heart, bone marrow (and/or fresh aspirate), lymph nodes (preferably one lymph node covering the route of administration and another one distant from the route of administration to cover systemic effects), spleen.

(F) Urogenital system—kidneys, urinary bladder, prostate, testes, epididymides, seminal vesicle(s), uterus, ovaries, female mammary gland.

(G) Other—all gross lesions and masses, skin.

(iv) In inhalation studies, the entire respiratory tract, including nose, pharynx, larynx, and paranasal sinuses should be examined and preserved. In dermal studies, skin from treated and adjacent control skin sites should be examined and preserved.

(v) Inflation of lungs and urinary bladder with a fixative is the optimal method for preservation of these tissues. The proper inflation and fixation of the lungs in inhalation studies is considered essential for appropriate and valid histopathological examination.

(vi) Information from clinical pathology and other in-life data should be considered before microscopic examination, since they may provide significant guidance to the pathologist.

(12) *Histopathology.* (i) The following histopathology should be performed:

(A) Full histopathology on the organs and tissues (listed under paragraph (e)(11)(iii) of this section) of all rodents and nonrodents in the control and high-dose groups, and all rodents

and nonrodents that died or were sacrificed during the study. The examination should be extended to all animals in all dosage groups if treatment-related changes are observed in the high-dose group.

(B) All gross lesions in all animals.

(C) Target tissues in all animals.

(ii) If the results show substantial alteration of the animal's normal life span, or other effects that might compromise the significance of the data, the next lower levels should be examined fully as described in paragraph (e)(12)(i) of this section.

(iii) An attempt should be made to correlate gross observations with microscopic findings.

(iv) Tissues and organs designated for microscopic examination should be fixed in 10% buffered formalin or a recognized suitable fixative as soon as necropsy is performed and no less than 48 hours prior to trimming.

(f) *Data and reporting*—(1) *Treatment of results.* (i) Data should be summarized in tabular form, showing for each test group the number of animals at the start of the test, the number of animals showing lesions, the types of lesions and the percentage of animals displaying each type of lesion.

(ii) When applicable, all observed results (quantitative and qualitative) should be evaluated by an appropriate statistical method. Any generally accepted statistical methods may be used; the statistical methods including significance criteria should be selected during the design of the study.

(2) *Evaluation of study results.* The findings of a chronic toxicity study should be evaluated in conjunction with the findings of preceding studies and considered in terms of the toxic effects as well as the necropsy and histopathological findings. The evaluation will include the relationship between the dose of the test substance and the presence, incidence, and severity of abnormalities (including behavioral and clinical abnormalities), gross lesions, identified target organs, body weight changes, effects on mortality and any other general or specific toxic effects.

(3) *Test report.* In addition to the reporting requirements specified under EPA Good Laboratory Practice Standards at 40 CFR part 792, subpart J, the following specific information must be reported:

(i) Test substance characterization should include:

(A) Chemical identification.

(B) Lot or batch number.

(C) Physical properties.

(D) Purity/impurities.

(ii) Identification and composition of any vehicle used.

(iii) Test system should contain data on:

(A) Species and strain of animals used and rationale for selection if other than that recommended.

(B) Age including body weight data and sex.

(C) Test environment including cage conditions, ambient temperature, humidity, and light/dark periods.

(D) Identification of animal diet.

(E) Acclimation period.

(iv) Test procedure should include the following data:

(A) Method of randomization used.

(B) Full description of experimental design and procedure.

(C) Dose regimen including levels, methods, and volume.

(v) Test results.

(A) Group animal data. Tabulation of toxic response data by species, strain, sex and exposure level for:

(*1*) Number of animals exposed.

(*2*) Number of animals showing signs of toxicity.

(*3*) Number of animals dying.

(B) Individual animal data. Data should be presented as summary (group mean) as well as for individual animals.

(*1*) Time of death during the study or whether animals survived to termination.

(*2*) Time of observation of each abnormal sign and its subsequent course.

(*3*) Body weight data.

(*4*) Feed and water (if collected) consumption data.

(*5*) Achieved dose (mg/kg/day) as a time-weighted average if the test substance is administered in the diet or drinking water.

(*6*) Results of ophthalmological examinations.

(*7*) Results of hematological tests performed.

(*8*) Results of clinical chemistry tests performed.

(*9*) Urinalysis tests performed and results.

(*10*) Results of observations made.

(*11*) Necropsy findings, including absolute and relative (to body weight) organ weight data.

(*12*) Detailed description of all histopathological findings.

(*13*) Statistical treatment of results, where appropriate.

(vi) In addition, for inhalation studies the following should be reported:

(A) Test conditions. The following exposure conditions must be reported:

(*1*) Description of exposure apparatus including design, type, dimensions, source of air, system for generating particulate and aerosols, method of conditioning air, treatment of exhaust air and the method of housing the animals in a test chamber.

(*2*) The equipment for measuring temperature, humidity, and particulate aerosol concentrations and size should be described.

(B) Exposure data. These data should be tabulated and presented with mean values and a measure of variability (e.g., standard deviation) and should include:

(*1*) Airflow rates through the inhalation equipment.

(*2*) Temperature and humidity of air.

(*3*) Actual (analytical or gravimetric) concentration in the breathing zone.

(*4*) Nominal concentration (total amount of test substance fed into the inhalation equipment divided by volume of air).

(*5*) Particle size distribution, calculated MMAD, and geometric standard deviation.

(*6*) Explanation as to why the desired chamber concentration and/or particle size could not be achieved (if applicable) and the efforts taken to comply with this aspect of the guidelines.

(g) *Quality control.* A system should be developed and maintained to assure and document adequate performance of laboratory staff and equipment. The study must be conducted in compliance with 40 CFR Part 792—Good Laboratory Practice Standards.

(h) *References.* For additional background information on this test guideline, the following references should be consulted. These references are available for inspection at the TSCA Nonconfidential Information Center, Rm. NE-B607, Environmental Protection Agency, 401 M St., SW., Washington, DC, 12 noon to 4 p.m., Monday through Friday, except legal holidays.

(1) Benitz, K.F. Measurement of Chronic Toxicity. *Methods of Toxicology*. Ed. G.E. Paget. Blackwell, Oxford. pp. 82–131 (1970).

(2) Crofton K.M., Howard J.L., Moser V.C., Gill M.W., Leiter L.W., Tilson H.A., MacPhail, R.C. Interlaboratory Comparison of Motor Activity Experiments: Implication for Neurotoxicological Assessments. *Neurotoxicol. Teratol.* 13, 599–609. (1991)

(3) D'Aguanno, W. Drug Safety Evaluation–Pre-Clinical Considerations. *Industrial Pharmacology: Neuroleptic.* Vol. I, Ed. S. Fielding and H. Lal. Futura, Mt. Kisco, NY. pp. 317–332 (1974).

(4) Fitzhugh, O.G. Chronic Oral Toxicity, Appraisal of the Safety of Chemicals in Foods, Drugs and Cosmetics. The Association of Food and Drug Officials of the United States. pp. 36–45 (1959, 3rd Printing 1975).

(5) Gad S.C. A Neuromuscular Screen for Use in Industrial Toxicology. *Journal of Toxicology and Environmental Health*. 9, 691–704. (1982)

(6) Goldenthal, E.I. and D'Aguanno, W. Evaluation of Drugs, Appraisal of the Safety of Chemicals in Foods, Drugs, and Cosmetics. The Association of Food and Drug Officials of the United States. pp. 60–67 (1959, 3rd Printing 1975).

(7) Meyer O.A., Tilson H.A., Byrd W.C., Riley M.T. A Method for the Routine Assessment of Fore- and Hind-Limb Grip Strength of Rats and Mice. *Neurobehav. Toxicol.* 1, 233–236. (1979)

(8) Moser V.C., McDaniel K.M., Phillips P.M. Rat Strain and Stock Comparisons using a Functional Observational Battery: Baseline Values and Effects of Amitraz. *Toxicol. Appl. Pharmacol.* 108, 267–283 (1991)

(9) Organization for Economic Cooperation and Development. Guidelines for Testing of Chemicals, Section 4-Health Effects, Part 452 Chronic Toxicity Studies, Paris (1981).

(10) Page, N.P. Chronic Toxicity and Carcinogenicity Guidelines. *Journal of*

Environmental Pathology and Toxicology. 11:161–182 (1977).

(11) Tupper, D.E., Wallace R.B. Utility of the Neurologic Examination in Rats. *Acta. Neurobiol. Exp.* 40, 999–1003 (1980).

(12) Weingand K., Brown G., Hall R. et al. (1996). Harmonization of Animal Clinical Pathology Testing in Toxicity and Safety Studies. *Fundam. and Appl. Toxicol.* 29:198–201.

[65 FR 78797, Dec. 15, 2000]

§ 799.9420 TSCA carcinogenicity.

(a) *Scope.* This section is intended to meet the testing requirements under section 4 of TSCA. The objective of a long-term carcinogenicity study is to observe test animals for a major portion of their life span for development of neoplastic lesions during or after exposure to various doses of a test substance by an appropriate route of administration.

(b) *Source.* The source material used in developing this TSCA test guideline is the OPPTS harmonized test guideline 870.4200 (June 1996 Public Draft). This source is available at the address in paragraph (g) of this section.

(c) *Definitions.* The following definitions apply to this section.

Carcinogenicity is the development of neoplastic lesions as a result of the repeated daily exposure of experimental animals to a chemical by the oral, dermal, or inhalation routes of exposure.

Cumulative toxicity is the adverse effects of repeated dose occurring as a result of prolonged action on, or increased concentration of, the administered test substance or its metabolites in susceptible tissues.

Dose in a carcinogenicity study is the amount of test substance administered via the oral, dermal or inhalation routes for a period of up to 24 months. Dose is expressed as weight of the test substance (grams, milligrams) per unit body weight of test animal (milligram per kilogram), or as weight of the test substance in parts per million (ppm) in food or drinking water. When exposed via inhalation, dose is expressed as weight of the test substance per unit volume of air (milligrams per liter) or as parts per million.

Target organ is any organ of a test animal showing evidence of an effect induced by a test substance.

(d) *Test procedures*—(1) *Animal selection*—(i) *Species and strain.* Testing shall be performed on two mammalian species. Rats and mice are the species of choice because of their relatively short life spans, limited cost of maintenance, widespread use in pharmacological and toxicological studies, susceptibility to tumor induction, and the availability of inbred or sufficiently characterized strains. Commonly used laboratory strains shall be used. If other mammalian species are used, the tester shall provide justification/reasoning for their selection.

(ii) *Age/weight.* (A) Testing shall be started with young healthy animals as soon as possible after weaning and acclimatization.

(B) Dosing should generally begin no later than 8 weeks of age.

(C) At commencement of the study, the weight variation of animals used shall not exceed ±20% of the mean weight for each sex.

(D) Studies using prenatal or neonatal animals may be recommended under special conditions.

(iii) *Sex.* (A) Equal numbers of animals of each sex shall be used at each dose level.

(B) Females shall be nulliparous and nonpregnant.

(iv) *Numbers.* (A) At least 100 rodents (50 males and 50 females) shall be used at each dose level and concurrent control group.

(B) If interim sacrifices are planned, the number shall be increased by the number of animals scheduled to be sacrificed during the course of the study.

(C) For a meaningful and valid statistical evaluation of long term exposure and for a valid interpretation of negative results, the number of animals in any group should not fall below 50% at 15 months in mice and 18 months in rats. Survival in any group should not fall below 25% at 18 months in mice and 24 months in rats.

(D) The use of adequate randomization procedures for the proper allocation of animals to test and control groups is required to avoid bias.

(E) Each animal shall be assigned a unique identification number. Dead

animals, their preserved organs and tissues, and microscopic slides shall be identified by reference to the unique numbers assigned.

(v) *Husbandry.* (A) Animals may be group-caged by sex, but the number of animals per cage must not interfere with clear observation of each animal. The biological properties of the test substance or toxic effects (e.g., morbidity, excitability) may indicate a need for individual caging. Animals should be housed individually in dermal studies and during exposure in inhalation studies.

(B) The temperature of the experimental animal rooms should be at 22±3 °C.

(C) The relative humidity of the experimental animal rooms should be 30 to 70%.

(D) Where lighting is artificial, the sequence should be 12 h light/12 h dark.

(E) Control and test animals should be fed from the same batch and lot. The feed should be analyzed to assure uniform distribution and adequacy of nutritional requirements of the species tested and for impurities that might influence the outcome of the test. Animals should be fed and watered ad libitum with food replaced at least weekly.

(F) The study should not be initiated until animals have been allowed a period of acclimatization/quarantine to environmental conditions, nor should animals from outside sources be placed on test without an adequate period of quarantine.

(2) *Control and test substances.* (i) Where necessary, the test substance is dissolved or suspended in a suitable vehicle. If a vehicle or diluent is needed, it should not elicit toxic effects itself. It is recommended that wherever possible the use of an aqueous solution be considered first, followed by consideration of solution in oil, and finally solution in other vehicles.

(ii) One lot of the test substance should be used, if possible, throughout the duration of the study, and the research sample should be stored under conditions that maintain its purity and stability. Prior to the initiation of the study, there should be a characterization of the test substance, including the purity of the test compound, and, if possible, the name and quantities of contaminants and impurities.

(iii) If the test or control substance is to be incorporated into feed or another vehicle, the period during which the test substance is stable in such a mixture should be determined prior to the initiation of the study. Its homogeneity and concentration should be determined prior to the initiation of the study and periodically during the study. Statistically randomized samples of the mixture should be analyzed to ensure that proper mixing, formulation, and storage procedures are being followed, and that the appropriate concentration of the test or control substance is contained in the mixture.

(3) *Control groups.* A concurrent control group (50 males and 50 females) is required. This group shall be untreated or if a vehicle is used in administering the test substance, a vehicle control group. If the toxic properties of the vehicle are not known, both untreated and vehicle control groups are required.

(4) *Dose levels and dose selection.* (i) For risk assessment purposes, at least three dose levels shall be used, in addition to the concurrent control group. Dose levels should be spaced to produce a gradation of effects. A rationale for the doses selected must be provided.

(ii) The highest dose level should elicit signs of toxicity without substantially altering the normal life span due to effects other than tumors. The highest dose should be determined based on the findings from a 90–day study to ensure that the dose used is adequate to asses the carcinogenic potential of the test substance. Thus, the selection of the highest dose to be tested is dependent upon changes observed in several toxicological parameters in subchronic studies. The highest dose tested need not exceed 1,000 mg/kg/day.

(iii) The intermediate-dose level should be spaced to produce a gradation of toxic effects.

(iv) The lowest dose level should produce no evidence of toxicity.

(v) For skin carcinogenicity studies, when toxicity to the skin is a determining factor, the highest dose selected should not destroy the functional integrity of the skin, the intermediate dose should be a minimally irritating dose, and the low dose should be the highest nonirritating dose.

(vi) The criteria for selecting the dose levels for skin carcinogenicity studies, based on gross and histopathologic dermal lesions, are as follows:

(A) Gross criteria for reaching the high dose:

(*1*) Erythema (moderate).

(*2*) Scaling.

(*3*) Edema (mild).

(*4*) Alopecia.

(*5*) Thickening.

(B) Histologic criteria for reaching the high dose:

(*1*) Epidermal hyperplasia.

(*2*) Epidermal hyperkeratosis.

(*3*) Epidermal parakeratosis.

(*4*) Adnexal atrophy/hyperplasia.

(*5*) Fibrosis.

(*6*) Spongiosis (minimal-mild).

(*7*) Epidermal edema (minimal-mild).

(*8*) Dermal edema (minimal-moderate).

(*9*) Inflammation (moderate).

(C) Gross criteria for exceeding the high dose:

(*1*) Ulcers, fissures.

(*2*) Exudate/crust (eschar).

(*3*) nonviable (dead) tissues.

(*4*) Anything leading to destruction of the functional integrity of the epidermis (e.g., caking, fissuring, open sores, eschar).

(D) Histologic criteria for exceeding the high dose:

(*1*) Crust (interfollicular and follicular).

(*2*) Microulcer.

(*3*) Degeneration/necrosis (mild to moderate).

(*4*) Epidermal edema (moderate to marked).

(*5*) Dermal edema (marked).

(*6*) Inflammation (marked).

(5) *Administration of the test substance.* The three main routes of administration are oral, dermal, and inhalation. The choice of the route of administration depends upon the physical and chemical characteristics of the test substance and the form typifying exposure in humans.

(i) *Oral studies.* If the test substance is administered by gavage, the animals are dosed with the test substance on a 7–day per week basis for a period of at least 18 months for mice and hamsters and 24 months for rats. However, based primarily on practical considerations, dosing by gavage or via a capsule on a 5–day per week basis is acceptable. If the test substance is administered in the drinking water or mixed in the diet, then exposure should be on a 7–day per week basis.

(ii) *Dermal studies.* (A) The animals should be treated with the test substance for at least 6 h/day on a 7–day per week basis for a period of at least 18 months for mice and hamsters and 24 months for rats. However, based primarily on practical considerations, application on a 5–day per week basis is acceptable. Dosing should be conducted at approximately the same time each day.

(B) Fur should be clipped weekly from the dorsal area of the trunk of the test animals. Care should be taken to avoid abrading the skin which could alter its permeability. A minimum of 24 hrs should be allowed for the skin to recover before the next dosing of the animal.

(C) Preparation of test substance. Liquid test substances are generally used undiluted, except as indicated in paragraph (e)(4)(vi) of this section. Solids should be pulverized when possible. The substance should be moistened sufficiently with water or, when necessary, with a suitable vehicle to ensure good contact with the skin. When a vehicle is used, the influence of the vehicle on toxicity of, and penetration of the skin by, the test substance should be taken into account. The volume of application should be kept constant, e.g. less than 100 uL for the mouse and less than 300 uL for the rat. Different concentrations of test solution should be prepared for different dose levels.

(D) The test substance shall be applied uniformly over a shaved area which is approximately 10 percent of the total body surface area. In order to dose approximately 10 percent of the body surface, the area starting at the

scapulae (shoulders) to the wing of the ileum (hipbone) and half way down the flank on each side of the animal should be shaved. With highly toxic substances, the surface area covered may be less, but as much of the area as possible should be covered with as thin and uniform a film as practical.

(iii) *Inhalation studies.* (A) The animals should be exposed to the test substance for 6 h/day on a 7–day per week basis, for a period of at least 18 months in mice and 24 months in rats. However, based primarily on practical considerations, exposure for 6 h/day on a 5–day per week basis is acceptable.

(B) The animals shall be tested in dynamic inhalation equipment designed to sustain a minimum air flow of 10 air changes per hr, an adequate oxygen content of at least 19%, and uniform conditions throughout the exposure chamber. Maintenance of slight negative pressure inside the chamber will prevent leakage of the test substance into surrounding areas.

(C) The selection of a dynamic inhalation chamber should be appropriate for the test substance and test system. Where a whole body chamber is used to expose animals to an aerosol, individual housing must be used to minimize crowding of the test animals and maximize their exposure to the test substance. To ensure stability of a chamber atmosphere, the total volume occupied by the test animals shall not exceed 5% of the volume of the test chamber. It is recommended, but not required, that nose-only or head-only exposure be used for aerosol studies in order to minimize oral exposures due to animals licking compound off their fur. Heat stress to the animals should be minimized.

(D) The temperature at which the test is performed should be maintained at 22±2 °C. The relative humidity should be maintained between 40 to 60%, but in certain instances (e.g., tests of aerosols, use of water vehicle) this may not be practicable.

(E) The rate of air flow shall be monitored continuously but recorded at least three times during exposure.

(F) Temperature and humidity shall be monitored continuously but should be recorded at least every 30 minutes.

(G) The actual concentration of the test substance shall be measured in the breathing zone. During the exposure period, the actual concentrations of the test substance should be held as constant as practicable, monitored continuously or intermittently depending on the method of analysis. Chamber concentrations may be measured using gravimetric or analytical methods as appropriate. If trial run measurements are reasonably consistent (plus or minus 10 percent for liquid aerosol, gas, or vapor; plus or minus 20 percent for dry aerosol), the two measurements should be sufficient. If measurements are not consistent, then three to four measurements should be taken.

(H) During the development of the generating system, particle size analysis shall be performed to establish the stability of aerosol concentrations with respect to particle size. Measurement of aerodynamic particle size in the animals's breathing zone should be measured during a trial run. If median aerodynamic diameter (MMAD) values for each exposure level are within 10% of each other, then two measurements during the exposures should be sufficient. If pretest measurements are not within 10% of each other, three to four measurements should be taken. The MMAD particle size range should be between 1–3 µm. The particle size of hygroscopic materials should be small enough to allow pulmonary deposition once the particles swell in the moist environment of the respiratory tract.

(I) Feed shall be withheld during exposure. Water may also be withheld during exposure.

(6) *Observation period.* It is necessary that the duration of the carcinogenicity study comprise the majority of the normal life span of the strain of animals used. This time period shall not be less than 24 months for rats and 18 months for mice, and ordinarily not longer than 30 months for rats and 24 months for mice. For longer time periods, and where any other species are used, consultation with the Agency in regard to the duration of the study is advised.

(7) *Observation of animals.* (i) Observations shall be made at least once each

day for morbidity and mortality. Appropriate actions should be taken to minimize loss of animals from the study (e.g., necropsy or refrigeration of those animals found dead and isolation or sacrifice of weak or moribund animals).

(ii) A careful clinical examination shall be made at least once weekly. Observations should be detailed and carefully recorded, preferably using explicitly defined scales. Observations should include, but not be limited to, evaluation of skin and fur, eyes and mucous membranes, respiratory and circulatory effects, autonomic effects such as salivation, central nervous system effects, including tremors and convulsions, changes in the level of activity, gait and posture, reactivity to handling or sensory stimuli, altered strength and stereotypes or bizarre behavior (e.g., self-mutilation, walking backwards).

(iii) Body weights shall be recorded individually for all animals; once a week during the first 13 weeks of the study and at least once every 4 weeks, thereafter, unless signs of clinical toxicity suggest more frequent weighing to facilitate monitoring of health status.

(iv) Measurements of feed consumption should be determined weekly during the first 13 weeks of the study and at approximately monthly intervals thereafter unless health status or body weight changes dictate otherwise. Measurement of water consumption should be determined at the same intervals if the test substance is administered in the drinking water.

(v) Moribund animals shall be removed and sacrificed when noticed and the time of death should be recorded as precisely as possible. At the end of the study period, all survivors shall be sacrificed.

(8) *Clinical pathology*. At 12 months, 18 months, and at terminal sacrifice, a blood smear shall be obtained from all animals. A differential blood count should be performed on blood smears from those animals in the highest dosage group and the controls from the terminal sacrifice. If these data, or data from the pathological examination indicate a need, then the 12– and 18–month blood smears should also be examined. Differential blood counts should be performed for the next lower groups if there is a major discrepancy between the highest group and the controls. If clinical observations suggest a deterioration in health of the animals during the study, a differential blood count of the affected animals shall be performed.

(9) *Gross necropsy*. (i) A complete gross examination shall be performed on all animals, including those that died during the experiment or were killed in a moribund condition.

(ii) At least the liver, kidneys, adrenals, testes, epididymides, ovaries, uterus, spleen, brain, and heart should be weighed wet as soon as possible after dissection to avoid drying. The lungs should be weighed if the test substance is administered by the inhalation route. The organs should be weighed from interim sacrifice animals as well as from at least 10 animals per sex per group at terminal sacrifice.

(iii) The following organs and tissues, or representative samples thereof, shall be preserved in a suitable medium for possible future histopathological examination.

(A) Digestive system.
(*1*) Salivary glands.
(*2*) Esophagus.
(*3*) Stomach.
(*4*) Duodenum.
(*5*) Jejunum.
(*6*) Ileum.
(*7*) Cecum.
(*8*) Colon.
(*9*) Rectum.
(*10*) Liver.
(*11*) Pancreas.
(*12*) Gallbladder (mice).
(B) Nervous system.
(*1*) Brain (multiple sections).
(*2*) Pituitary.
(*3*) Peripheral nerves.
(*4*) Spinal cord (three levels).
(*5*) Eyes (retina, optic nerve).
(C) Glandular system.
(*1*) Adrenals.
(*2*) Parathyroids.
(*3*) Thyroids.
(D) Respiratory system.
(*1*) Trachea.
(*2*) Lung.
(*3*) Pharynx.
(*4*) Larynx.
(*5*) Nose.

(E) Cardiovascular/hematopoietic system.

(*1*) Aorta (thoracic).

(*2*) Heart.

(*3*) Bone marrow.

(*4*) Lymph nodes.

(*5*) Spleen.

(F) Urogenital system.

(*1*) Kidneys.

(*2*) Urinary bladder.

(*3*) Prostate.

(*4*) Testes/epididymides.

(*5*) Seminal vesicles.

(*6*) Uterus.

(*7*) Ovaries.

(*8*) Female mammary gland.

(G) Other.

(*1*) Skin.

(*2*) All gross lesions and masses.

(iv) In inhalation studies, the entire respiratory tract, including nose, pharynx, larynx, and paranasal sinuses should be examined and preserved. In dermal studies, skin from treated and adjacent control skin sites should be examined and preserved.

(v) Inflation of lungs and urinary bladder with a fixative is the optimal method for preservation of these tissues. The proper inflation and fixation of the lungs in inhalation studies is essential for appropriate and valid histopathological examination.

(vi) Information from clinical pathology, and other in-life data should be considered before microscopic examination, since they may provide significant guidance to the pathologist.

(10) *Histopathology.* (i) The following histopathology shall be performed:

(A) Full histopathology on the organs and tissues under paragraph (d)(9)(iii) of this section of all animals in the control and high dose groups and all animals that died or were killed during the study.

(B) All gross lesions in all animals.

(C) Target organs in all animals.

(ii) If the results show substantial alteration of the animal's normal life span, the induction of effects that might affect a neoplastic response, or other effects that might compromise the significance of the data, the next lower dose levels shall be examined as described in paragraph (d)(10)(i) of this section.

(iii) An attempt should be made to correlate gross observations with microscopic findings.

(iv) Tissues and organs designated for microscopic examination should be fixed in 10 percent buffered formalin or a recognized suitable fixative as soon as necropsy is performed and no less than 48 hours prior to trimming.

(e) *Data and reporting*—(1) *Treatment of results.* (i) Data shall be summarized in tabular form, showing for each test group the number of animals at the start of the test, the number of animals showing lesions, the types of lesions, and the percentage of animals displaying each type of lesion.

(ii) All observed results (quantitative and qualitative) shall be evaluated by an appropriate statistical method. Any generally accepted statistical methods may be used; the statistical methods including significance criteria shall be selected during the design of the study.

(2) *Evaluation of study results.* (i) The findings of a carcinogenicity study should be evaluated in conjunction with the findings of previous studies and considered in terms of the toxic effects, the necropsy and histopathological findings. The evaluation shall include the relationship between the dose of the test substance and the presence, incidence, and severity of abnormalities (including behavioral and clinical abnormalities), gross lesions, identified target organs, body weight changes, effects on mortality, and any other general or specific toxic effects.

(ii) In any study which demonstrates an absence of toxic effects, further investigation to establish absorption and bioavailablity of the test substance should be considered.

(iii) In order for a negative test to be acceptable, it must meet the following criteria: No more than 10% of any group is lost due to autolysis, cannibalism, or management problems; and survival in each group is no less than 50% at 15 months for mice and 18 months for rats. Survival should not fall below 25% at 18 months for mice and 24 months for rats.

(iv) The use of historical control data from an appropriate time period from the same testing laboratory (i.e., the incidence of tumors and other suspect

lesions normally occurring under the same laboratory conditions and in the same strain of animals employed in the test) is helpful for assessing the significance of changes observed in the current study.

(3) *Test report.* (i) In addition to the reporting requirements as specified under 40 CFR part 792, subpart J, the following specific information shall be reported. Both individual and summary data should be presented.

(A) Test substance characterization should include:

(*1*) Chemical identification.

(*2*) Lot or batch number.

(*3*) Physical properties.

(*4*) Purity/impurities.

(*5*) Identification and composition of any vehicle used.

(B) Test system should contain data on:

(*1*) Species and strain of animals used and rationale for selection if other than that recommended.

(*2*) Age including body weight data and sex.

(*3*) Test environment including cage conditions, ambient temperature, humidity, and light/dark periods.

(*4*) Identification of animal diet.

(*5*) Acclimation period.

(C) Test procedure should include the following data:

(*1*) Method of randomization used.

(*2*) Full description of experimental design and procedure.

(*3*) Dose regimen including levels, methods, and volume.

(4) *Test results*—(i) *Group animal data.* Tabulation of toxic response data by species, strain, sex, and exposure level for:

(A) Number of animals exposed.

(B) Number of animals showing signs of toxicity.

(C) Number of animals dying.

(ii) *Individual animal data.* Data should be presented as summary (group mean) as well as for individual animals.

(A) Time of death during the study or whether animals survived to termination.

(B) Time of observation of each abnormal sign and its subsequent course.

(C) Body weight data.

(D) Feed and water consumption data, when collected.

(E) Results of clinical pathology and immunotoxicity screen when performed.

(F) Necropsy findings including absolute/relative organ weight data.

(G) Detailed description of all histopathological findings.

(H) Statistical treatment of results where appropriate.

(I) Historical control data.

(J) Achieved dose (mg/kg/day) as a time-weighted average if the test substance is administered in the diet or drinking water.

(iii) *Inhalation studies.* In addition, for inhalation studies the following shall be reported:

(A) *Test conditions.* The following exposure conditions shall be reported.

(*1*) Description of exposure apparatus including design, type, dimensions, source of air, system for generating particulate and aerosols, method of conditioning air, treatment of exhaust air and the method of housing the animals in a test chamber.

(*2*) The equipment for measuring temperature, humidity, and particulate aerosol concentrations and size should be described.

(B) *Exposure data.* These shall be tabulated and presented with mean values and a measure of variability (e.g. standard deviation) and should include:

(*1*) Airflow rates through the inhalation equipment.

(*2*) Temperature and humidity of air.

(*3*) Actual (analytical or gravimetric) concentration in the breathing zone.

(*4*) Nominal concentration (total amount of test substance fed into the inhalation equipment divided by volume of air).

(*5*) Particle size distribution, calculated MMAD and geometric standard deviation (GSD).

(*6*) Explanation as to why the desired chamber concentration and/or particle size could not be achieved (if applicable) and the efforts taken to comply with this aspect of the sections.

(f) *Quality assurance.* A system shall be developed and maintained to assure and document adequate performance of laboratory staff and equipment. The study shall be conducted in compliance with 40 CFR part 792—Good Laboratory Practice Standards.

(g) *References.* For additional background information on this test guideline, the following references should be consulted. These references are available for inspection at the TSCA Nonconfidential Information Center, Rm. NE-B607, Environmental Protection Agency, 401 M St., SW., Washington, DC, 12 noon to 4 p.m., Monday through Friday, except legal holidays.

(1) Benitz, K.F. Ed. Paget, G.E. Measurement of Chronic Toxicity. *Methods of Toxicology* (Blackwell, Oxford, 1970) pp. 82–131.

(2) Fitzhugh, O.G. Chronic Oral Toxicity, Appraisal of the Safety of Chemicals in Foods, Drugs and Cosmetics. The Association of Food and Drug Officials of the United States. pp. 36–45 (1959, 3rd Printing 1975).

(3) Goldenthal, E.I. and D'Aguanno, W. Evaluation of Drugs, Appraisal of the Safety of Chemicals in Foods, Drugs, and Cosmetics. The Association of Food and Drug Officials of the United States. pp. 60–67 (1959, 3rd Printing 1975).

(4) Organisation for Economic Co-operation and Development. Guidelines for Testing of Chemicals, Section 4–Health Effects, Part 451 Carcinogenicity Studies (Paris, 1981).

(5) Page, N.P. Chronic Toxicity and Carcinogenicity Guidelines. *Journal of Environmental Pathology and Toxicology*. 11:161–182 (1977).

(6) Page, N.P. Eds. Kraybill and Mehlman. Concepts of a Bioassay Program in Environmental Carcinogenesis. Vol.3. *Advances in Modern Toxicology* (Hemisphere, Washington, DC., 1977) pp. 87–171.

(7) Sontag, J.M. *et al.* Guidelines for Carcinogen Bioassay in Small Rodents. NCI-CS-TR-1 United States Cancer Institute, Division of Cancer Control and Prevention, Carcinogenesis Bioassay Program (Bethesda, MD).

[62 FR 43824, Aug. 15, 1997, as amended at 64 FR 35078, June 30, 1999]

§ 799.9430 TSCA combined chronic toxicity/carcinogenicity.

(a) *Scope.* This section is intended to meet the testing requirements under section 4 of the Toxic Substances Control Act (TSCA). The objective of a combined chronic toxicity/carcinogenicity study is to determine the effects of a substance in a mammalian species following prolonged and repeated exposure. The application of this section should generate data which identify the majority of chronic and carcinogenicity effects and determine dose-response relationships. The design and conduct should allow for the detection of neoplastic effects and a determination of the carcinogenic potential as well as general toxicity, including neurological, physiological, biochemical, and hematological effects and exposure-related morphological (pathology) effects.

(b) *Source.* The source material used in developing this TSCA test guideline is the Office of Prevention, Pesticides, and Toxic Substances (OPPTS) harmonized test guideline 870.4300 (August 1998, final guideline). This source is available at the address in paragraph (h) of this section.

(c) *Definitions.* The following definitions apply to this section.

Carcinogenicity is the development of neoplastic lesions as a result of the repeated daily exposure of experimental animals to a chemical by the oral, dermal, or inhalation routes of exposure.

Chronic toxicity is the adverse effects occurring as a result of the repeated daily exposure of experimental animals to a chemical by the oral, dermal, or inhalation routes of exposure.

Cumulative toxicity is the adverse effects of repeated dose occurring as a result of prolonged action on, or increased concentration of, the administered test substance or its metabolites in susceptible tissues.

Dose in a combined chronic toxicity/carcinogenicity study is the amount of test substance administered via the oral, dermal, or inhalation routes for a period of up to 24 months. Dose is expressed as weight of the test substance per unit body weight of test animal (milligrams per kilogram), or as weight of the test substance in parts per million (ppm) in food or drinking water. When exposed via inhalation, dose is expressed as weight of the test substance per unit volume of air (milligrams per liter) or as parts per million per day. For dermal application, dose is expressed as weight of the test substance (grams, milligrams) per unit

body weight of the test animal (milligrams per kilogram) or as weight of the substance per unit surface area (milligrams per square centimeter) per day.

No-observed-effects level (NOEL) is the maximum dose used in a study which produces no observed adverse effects. The NOEL is usually expressed in terms of the weight of a test substance given daily per unit weight of test animal (milligrams per kilogram per day).

Target organ is any organ of a test animal showing evidence of an effect induced by a test substance.

(d) *Limit test.* If a test at one dose level of at least 1,000 mg/kg body weight (expected human exposure may indicate the need for a higher dose level), using the procedures described for this study, produces no observable toxic effects or if toxic effects would not be expected based upon data of structurally related compounds, then a full study using three dose levels might not be necessary.

(e) *Test procedures*—(1) *Animal selection*—(i) *Species and strain.* Preliminary studies providing data on acute, subchronic, and metabolic responses should have been carried out to permit an appropriate choice of animals (species and strain). As discussed in other guidelines, the mouse and rat have been most widely used for assessment of carcinogenic potential, while the rat and dog have been most often studied for chronic toxicity. For the combined chronic toxicity/carcinogenicity study via the oral and inhalation routes, the rat is the species of choice and for the dermal route, the mouse is species of choice. If other species are used, the tester must provide justification/reasoning for their selection. The strain selected should be susceptible to the carcinogenic or toxic effect of the class of substances being tested, if known, and provided it does not have a spontaneous background incidence too high for meaningful assessment. Commonly used laboratory strains must be employed.

(ii) *Age/weight.* (A) Testing must be started with young healthy animals as soon as possible after weaning and acclimatization.

(B) Dosing should generally begin no later than 8 weeks of age.

(C) At commencement of the study, the weight variation of animals used must be within 20% of the mean weight for each sex.

(D) Studies using prenatal or neonatal animals may be recommended under special conditions.

(iii) *Sex.* (A) Equal numbers of animals of each sex must be used at each dose level.

(B) Females must be nulliparous and nonpregnant.

(iv) *Numbers.* (A) At least 100 rodents (50 males and 50 females) must be used at each dose level and concurrent control group. At least 20 additional rodents (10 males and 10 females) should be used for satellite dose groups and the satellite control group. The purpose of the satellite group is to allow for the evaluation of chronic toxicity after 12 months of exposure to the test substance.

(B) For a meaningful and valid statistical evaluation of long term exposure and for a valid interpretation of negative results, the number of animals in any group should not fall below 50% at 15 months in mice and 18 months in rats. Survival in any group should not fall below 25% at 18 months in mice and 24 months in rats.

(C) To avoid bias, the use of adequate randomization procedures for the proper allocation of animals to test and control groups is required.

(D) Each animal must be assigned a unique identification number. Dead animals (and their preserved organs) and tissues, and microscopic slides shall be identified by reference to the unique numbers assigned.

(v) *Husbandry.* (A) Animals may be group-caged by sex, but the number of animals per cage must not interfere with clear observation of each animal. The biological properties of the test substance or toxic effects (e.g., morbidity, excitability) may indicate a need for individual caging. Rodents should be housed individually in dermal studies and during exposure in inhalation studies.

(B) The temperature of the experimental animal rooms should be at 22 ±3 °C.

(C) The relative humidity of the experimental animal rooms should be 50 ±20%.

(D) Where lighting is artificial, the sequence should be 12 hours light/12 hours dark.

(E) Control and test animals should be fed from the same batch and lot. The feed should be analyzed to assure uniform distribution and adequacy of nutritional requirements of the species tested and for impurities that might influence the outcome of the test. Animals should be fed and watered ad libitum with food replaced at least weekly.

(F) The study should not be initiated until animals have been allowed a period of acclimatization/quarantine to environmental conditions, nor should animals from outside sources be placed on test without an adequate period of quarantine. An acclimation period of at least five days is recommended.

(2) *Control and test substances.* (i) Where necessary, the test substance is dissolved or suspended in a suitable vehicle. If a vehicle or diluent is needed, it should not elicit toxic effects itself nor substantially alter the chemical or toxicological properties of the test substance. It is recommended that wherever possible the usage of an aqueous solution be considered first, followed by consideration of a solution in oil, and finally solution in other vehicles.

(ii) One lot of the test substance should be used throughout the duration of the study if possible, and the research sample should be stored under conditions that maintain its purity and stability. Prior to the initiation of the study, there should be a characterization of the test substance, including the purity of the test compound, and, if possible, the name and quantities of contaminants and impurities.

(iii) If the test or control substance is to be incorporated into feed or another vehicle, the period during which the test substance is stable in such a mixture should be determined prior to the initiation of the study. Its homogeneity and concentration should be determined prior to the initiation of the study and periodically during the study. Statistically randomized samples of the mixture should be analyzed to ensure that proper mixing, formulation, and storage procedures are being followed, and that the appropriate concentration of the test or control substance is contained in the mixture.

(3) *Control groups.* A concurrent control group is required. This group should be an untreated or sham-treated control group or, if a vehicle is used in administering the test substance, a vehicle control group. If the toxic properties of the vehicle are not known or cannot be made available, both untreated and vehicle control groups are required.

(4) *Dose levels and dose selection.* (i) For risk assessment purposes, at least three dose levels must be used, in addition to the concurrent control group. Dose levels should be spaced to produce a gradation of effects. A rationale for the doses selected must be provided.

(ii) The highest dose level in rodents should elicit signs of toxicity without substantially altering the normal life span due to effects other than tumors. The highest dose should be determined based on the findings from a 90–day study to ensure that the dose used is adequate to assess the chronic toxicity and the carcinogenic potential of the test substance. Thus, the selection of the highest dose to be tested is dependent upon changes observed in several toxicological parameters in subchronic studies. The highest dose tested need not exceed 1,000 mg/kg/day.

(iii) The intermediate-dose levels should be spaced to produce a gradation of toxic effects.

(iv) The lowest-dose level should produce no evidence of toxicity.

(v) For skin carcinogenicity studies, when toxicity to the skin is a determining factor, the highest dose selected should not destroy the functional integrity of the skin, the intermediate doses should be a minimally irritating dose and the low dose should be the highest nonirritating dose.

(vi) The criteria for selecting the dose levels for skin carcinogenicity studies, based on gross and histopathologic dermal lesions, are as follows:

(A) Gross criteria for reaching the high dose:

(*1*) Erythema (moderate).

(*2*) Scaling.

(*3*) Edema (mild).

(*4*) Alopecia.

(*5*) Thickening.

(B) Histologic criteria for reaching the high dose:

(*1*) Epidermal hyperplasia.

(*2*) Epidermal hyperkeratosis.

(*3*) Epidermal parakeratosis.

(*4*) Adnexal atrophy/hyperplasia.

(*5*) Fibrosis.

(*6*) Spongiosis (minimal-mild).

(*7*) Epidermal edema (minimal-mild).

(*8*) Dermal edema (minimal-moderate).

(*9*) Inflammation (moderate).

(C) Gross criteria for exceeding the high dose:

(*1*) Ulcers-fissures, exudate/crust (eschar), nonviable (dead) tissues.

(*2*) Anything leading to destruction of the functional integrity of the epidermis (e.g., caking, fissuring, open sores, eschar).

(D) Histologic criteria for exceeding the high-dose:

(*1*) Crust (interfollicular and follicular).

(*2*) Microulcer.

(*3*) Degeneration/necrosis (mild to moderate).

(*4*) Epidermal edema (moderate to marked).

(*5*) Dermal edema (marked).

(*6*) Inflammation (marked).

(5) *Administration of the test substance.* The three main routes of administration are oral, dermal, and inhalation. The choice of the route of administration depends upon the physical and chemical characteristics of the test substance and the form typifying exposure in humans.

(i) *Oral studies.* If the test substance is administered by gavage, the animals are dosed with the test substance on a 7–day per week basis for a period of at least 18 months for mice and hamsters and 24 months for rats. However, based primarily on practical considerations, dosing by gavage on a 5–day per week basis is acceptable. If the test substance is administered in the drinking water or mixed in the diet, then exposure should be on a 7–day per week basis.

(ii) *Dermal studies.* (A) Preparation of animal skin. Shortly before testing, fur should be clipped from not less than 10% of the body surface area for application of the test substance. In order to dose approximately 10% of the body surface, the area starting at the scapulae (shoulders) to the wing of the ileum (hipbone) and half way down the flank on each side of the animal should be shaved. Shaving should be carried out approximately 24 hours before dosing. Repeated clipping or shaving is usually needed at approximately weekly intervals. When clipping or shaving the fur, care should be taken to avoid abrading the skin which could alter its permeability.

(B) Preparation of test substance. Liquid test substances are generally used undiluted, except as indicated in paragraph (e)(4)(vi) of this section. Solids should be pulverized when possible. The substance should be moistened sufficiently with water or, when necessary, with a suitable vehicle to ensure good contact with the skin. When a vehicle is used, the influence of the vehicle on toxicity of, and penetration of the skin by, the test substance should be taken into account. The volume of application should be kept constant, e.g., less than 100 µL for the mouse and less than 300 µL for the rat. Different concentrations of test solution should be prepared for different dose levels.

(C) Administration of test substance. The duration of exposure should be at least 18 months for mice and hamsters and 24 months for rats. Ideally, the animals should be treated with test substance for at least 6 hours per day on a 7-day per week basis. However, based on practical considerations, application on a 5-day per week basis is acceptable. Dosing should be conducted at approximately the same time each day. The test substance must be applied uniformly over the treatment site. The surface area covered may be less for highly toxic substances. As much of the area should be covered with as thin and uniform a film as possible. For rats, the test substance may be held in contact with the skin with a porous gauze dressing and nonirritating tape if necessary. The test site should be further covered in a suitable manner to retain the gauze dressing plus test substance and to ensure that the animals cannot ingest the test substance. The application site should not be covered when the mouse is the species of choice. The test substance may

be wiped from the skin after the 6-hour exposure period to prevent ingestion.

(iii) *Inhalation studies.* (A) The animals should be exposed to the test substance, for 6 hours per day on a 7–day per week basis, for a period of at least 18 months in mice and 24 months in rats. However, based primarily on practical considerations, exposure for 6 hours per day on a 5–day per week basis is acceptable.

(B) The animals must be tested in dynamic inhalation equipment designed to sustain a minimum air flow of 10 air changes per hour, an adequate oxygen content of at least 19%, and uniform conditions throughout the exposure chamber. Maintenance of slight negative pressure inside the chamber will prevent leakage of the test substance into surrounding areas. It is not normally necessary to measure chamber oxygen concentration if airflow is adequate.

(C) The selection of a dynamic inhalation chamber should be appropriate for the test substance and test system. Where a whole body chamber is used, individual housing must be used to minimize crowding of the test animals and maximize their exposure to the test substance. To ensure stability of a chamber atmosphere, the total volume occupied by the test animals shall not exceed 5% of the volume of the test chamber. It is recommended, but not required, that nose-only or head-only exposure be used for aerosol studies in order to minimize oral exposures due to animals licking compound off their fur. The animals should be acclimated and heat stress minimized.

(D) The temperature at which the test is performed should be maintained at 22 ±2 °C. The relative humidity should be maintained between 40 to 60%, but in certain instances (e.g., tests of aerosols, use of water vehicle) this may not be practicable.

(E) The rate of air flow must be monitored continuously but recorded at least three times during the exposure.

(F) Temperature and humidity must be monitored continuously but should be recorded at least every 30 minutes.

(G) The actual concentrations of the test substance must be measured in the animal's breathing zone. During the exposure period, the actual concentrations of the test substance must be held as constant as practicable and monitored continuously or intermittently depending on the method of analysis. Chamber concentration may be measured using gravimetric or analytical methods as appropriate. If trial run measurements are reasonably consistent (±10% for liquid aerosol, gas, or vapor; ±20% for dry aerosol), then two measurements should be sufficient. If measurements are not consistent, three to four measurements should be taken. If there is some difficulty in measuring chamber analytical concentration due to precipitation, nonhomogeneous mixtures, volatile components, or other factors, additional analyses of inert components may be necessary.

(H) During the development of the generating system, particle size analysis must be performed to establish the stability of aerosol concentrations with respect to particle size. The mass median aerodynamic diameter (MMAD) particle size range should be between 1–3 μm. The particle size of hygroscopic materials should be small enough when dry to assure that the size of the swollen particle will still be within the 1–3 μm range. Measurements of aerodynamic particle size in the animal's breathing zone should be measured during a trial run. If MMAD values for each exposure level are within 10% of each other, then two measurements during the exposures should be sufficient. If pretest measurements are not within 10% of each other, three to four measurements should be taken.

(I) Feed must be withheld during exposure. Water may also be withheld during exposure.

(J) When the physical and chemical properties of the test substance show a low flash point or the test substance is otherwise known or thought to be explosive, care must be taken to avoid exposure level concentrations that could result in an exposure chamber explosion during the test.

(6) *Observation period.* (i) This time period must not be less than 24 months for rats and 18 months for mice, and ordinarily not longer than 30 months for rats and 24 months for mice. For longer time periods, and where any other species are used, consultation with the

Agency in regard to the duration of the study is advised.

(ii) Animals in a satellite group to assess chronic toxicity should be observed for 12 months.

(7) *Observation of animals.* (i) Observations must be made at least twice each day for morbidity and mortality. Appropriate actions should be taken to minimize loss of animals to the study (e.g., necropsy or refrigeration of those animals found dead and isolation or sacrifice of weak or moribund animals). General clinical observations shall be made at least once a day, preferably at the same time each day, taking into consideration the peak period of anticipated effects after dosing. The clinical condition of the animal should be recorded.

(ii) A careful clinical examination must be made at least once weekly. Observations should be detailed and carefully recorded, preferably using explicity defined scales. Observations should include, but not be limited to, evaluation of skin and fur, eyes and mucous membranes, respiratory and circulatory effects, autonomic effects such as salivation, central nervous system effects, including tremors and convulsions, changes in the level of activity, gait and posture, reactivity to handling or sensory stimuli, altered strength, and stereotypes or bizarre behavior (e.g., self-mutilation, walking backwards).

(iii) Signs of toxicity should be recorded as they are observed including the time of onset, degree and duration.

(iv) Body weights must be recorded individually for all animals once prior to administration of the test substance, once a week during the first 13 weeks of the study and at least once every 4 weeks thereafter unless signs of clinical toxicity suggest more frequent weighing to facilitate monitoring of health status.

(v) Measurements of feed consumption should be determined weekly during the first 13 weeks of the study and then at approximately monthly intervals unless health status or body weight changes dictate otherwise. Measurements of water consumption should be determined at the same intervals if the test material is administered in drinking water.

(vi) Moribund animals must be removed and sacrificed when noticed and the time of death should be recorded as precisely as possible. At the end of the study period, all survivors must be sacrificed. Animals in the satellite group must be sacrificed after 12 months of exposure to the test substance (interim sacrifice).

(8) *Clinical pathology.* Hematology, clinical chemistry and urinalyses must be performed from 10 animals per sex per group. The parameters should be examined at approximately 6 month intervals during the first 12 months of the study. If possible, these collections should be from the same animals at each interval. If hematological and biochemical effects are seen in the subchronic study, testing shall also be performed at 3 months. Overnight fasting of animals prior to blood sampling is recommended.

(i) *Hematology.* The recommended parameters are red blood cell count, hemoglobin concentration, hematocrit, mean corpuscular volume, mean corpuscular hemoglobin, and mean corpuscular hemoglobin concentration, white blood cell count, differential leukocyte count, platelet count, and a measure of clotting potential, such as prothrombin time or activated partial thromboplastin time.

(ii) *Clinical chemistry.* (A) Parameters which are considered appropriate to all studies are electrolyte balance, carbohydrate metabolism, and liver and kidney function. The selection of specific tests will be influenced by observations on the mode of action of the substance and signs of clinical toxicity.

(B) The recommended clinical chemistry determinations are potassium, sodium, glucose, total cholesterol, urea nitrogen, creatinine, total protein, and albumin. More than two hepatic enzymes, (such as alanine aminotransferase, aspartate aminotransferase, alkaline phosphatase, sorbitol dehydrogenase, or gamma glutamyl transpeptidase) should also be measured. Measurements of addtional enzymes (of hepatic or other origin) and bile acids, may also be useful.

(iii) If a test chemical has an effect on the hematopoietic system,

reticulocyte counts and bone marrow cytology may be indicated.

(iv) Other determinations that should be carried out if the test chemical is known or suspected of affecting related measures include calcium, phosphorus, fasting triglycerides, hormones, methemoglobin, and cholinesterases.

(v) *Urinalyses.* Urinalysis for rodents must be performed at the end of the first year of the study using timed urine collection. Urinalysis determinations include: appearance, volume, osmolality or specific gravity, pH, protein, glucose, and blood/blood cells.

(9) *Ophthalmological examination.* Examinations must be made on all animals using an ophthalmoscope or an equivalent device prior to the administration of the test substance and at termination of the study on 10 animals per sex in the high-dose and control groups. If changes in eyes are detected, all animals must be examined.

(10) *Gross necropsy.* (i) A complete gross examination must be performed on all animals, including those which died during the experiment or were sacrificed in a moribund condition.

(ii) At least, the liver, kidneys, adrenals, testes, epididymides, ovaries, uterus, spleen, brain, and heart should be trimmed and weighed wet, as soon as possible after dissection to avoid drying. The lungs should be weighed if the test substance is administered by the inhalation route. The organs should be weighed from interim sacrifice animals as well as from at least 10 animals per sex per group at terminal sacrifice.

(iii) The following organs and tissues, or representative samples thereof, must be preserved in a suitable medium for possible future histopathological examination:

(A) Digestive system—salivary glands, esophagus, stomach, duodenum, jejunum, ileum, cecum, colon, rectum, liver, pancreas, gallbladder (when present) .

(B) Nervous system—brain (multiple sections, including cerebrum, cerebellum and medulla/pons), pituitary, peripheral nerve (sciatic or tibial, preferably in close proximity to the muscle), spinal cord (three levels, cervical, mid-thoracic, and lumbar), eyes (retina, optic nerve).

(C) Glandular system—adrenals, parathyroid, thyroid.

(D) Respiratory system—trachea, lungs, pharynx, larynx, nose.

(E) Cardiovascular/Hematopoietic system—aorta, heart, bone marrow (and/or fresh aspirate), lymph nodes (preferably one lymph node covering the route of administration and another one distant from the route of administration to cover systemic effects), spleen.

(F) Urogenital system—kidneys, urinary bladder, prostate, testes, epididymides, seminal vesicle(s), uterus, ovaries, female mammary gland.

(G) Other—all gross lesions and masses, skin.

(iv) In inhalation studies, the entire respiratory tract, including nose, pharynx, larynx, and paranasal sinuses should be examined and preserved. In dermal studies, skin from treated and adjacent control skin sites should be examined and preserved.

(v) Inflation of lungs and urinary bladder with a fixative is the optimal method for preservation of these tissues. The proper inflation and fixation of the lungs in inhalation studies is essential for appropriate and valid histopathological examination.

(vi) Information from clinical pathology and other in-life data should be considered before microscopic examination, since these data may provide significant guidance to the pathologist.

(11) [Reserved]

(12) *Histopathology.* (i) The following histopathology must be performed:

(A) Full histopathology on the organs and tissues, listed in paragraph (e)(10)(iii) of this section of all animals in the control and high dose groups and of all animals that died or were sacrificed during the study.

(B) All gross lesions in all animals.

(C) Target organs in all animals.

(ii) If the results show substantial alteration of the animal's normal life span, the induction of effects that might affect a neoplastic response, or other effects that might compromise the significance of the data, the next lower levels should be examined fully as described in paragraph (e)(12)(i) of this section.

(iii) An attempt should be made to correlate gross observations with microscopic findings.

(iv) Tissues and organs designated for microscopic examination should be fixed in 10% buffered formalin or a recognized suitable fixative as soon as necropsy is performed and no less than 48 hours prior to trimming.

(f) *Data and reporting*—(1) *Treatment of results.* (i) Data must be summarized in tabular form, showing for each test group the number of animals at the start of the test, the number of animals showing lesions, the types of lesions and the percentage of animals displaying each type of lesion.

(ii) When applicable, all observed results, quantitative and qualitative, must be evaluated by an appropriate statistical method. Any generally accepted statistical methods may be used; the statistical methods including significance criteria should be selected during the design of the study.

(2) *Evaluation of study results.* (i) The findings of a combined chronic toxicity/carcinogenicity study should be evaluated in conjunction with the findings of previous studies and considered in terms of the toxic effects, the necropsy and histopathological findings. The evaluation must include the relationship between the dose of the test substance and the presence, incidence and severity of abnormalities (including behavioral and clinical abnormalities), gross lesions, identified target organs, body weight changes, effects on mortality and any other general or specific toxic effects.

(ii) In any study which demonstrates an absence of toxic effects, further investigation to establish absorption and bioavailablity of the test substance should be considered.

(iii) In order for a negative test to be acceptable, it should meet the following criteria—no more than 10% of any group is lost due to autolysis, cannibalism, or management problems, and survival in each group is no less than 50% at 15 months for mice and 18 months for rats. Survival should not fall below 25% at 18 months for mice and 24 months for rats.

(iv) The use of historical control data from an appropriate time period from the same testing laboratory (i.e, the incidence of tumors and other suspect lesions normally occurring under the same laboratory conditions and in the same strain of animals employed in the test) is helpful for assessing the significance of changes observed in the current study.

(3) *Test report.* (i) In addition to the reporting requirements specified under EPA Good Laboratory Practice Standards at 40 CFR part 792, subpart J, the following specific information must be reported:

(A) Test substance characterization should include:

(*1*) Chemical identification.

(*2*) Lot or batch number.

(*3*) Physical properties.

(*4*) Purity/impurities.

(*5*) Identification and composition of any vehicle used.

(B) Test system should contain data on:

(*1*) Species and strain of animals used and rationale for selection if other than that recommended.

(*2*) Age including body weight data and sex.

(*3*) Test environment including cage conditions, ambient temperature, humidity, and light/dark periods.

(*4*) Identification of animal diet.

(*5*) Acclimation period.

(C) Test procedure should include the following data:

(*1*) Method of randomization used.

(*2*) Full description of experimental design and procedure.

(*3*) Dose regimen including levels, methods, and volume.

(4) *Test results.* (i) Group animal data. Tabulation of toxic response data by species, strain, sex, and exposure level for:

(A) Number of animals exposed.

(B) Number of animals showing signs of toxicity.

(C) Number of animals dying.

(ii) Individual animal data. Data should be presented as summary (group mean) as well as for individual animals.

(A) Time of death during the study or whether animals survived to termination.

(B) Time of observation of each abnormal sign and its subsequent course.

(C) Body weight data.

(D) Feed and water consumption data, when collected.

(E) Achieved dose (milligrams/kilogram body weight) as a time-weighed average is the test substance is administered in the diet or drinking water.

(F) Results of ophthalmological examination, when performed.

(G) Results of hematological tests performed.

(H) Results of clinical chemistry tests performed.

(I) Results of urinalysis tests performed.

(J) Results of observations made.

(K) Necropsy findings including absolute/relative organ weight data.

(L) Detailed description of all histopathological findings.

(M) Statistical treatment of results where appropriate.

(N) Historical control data.

(iii) In addition, for inhalation studies the following should be reported:

(A) Test conditions. The following exposure conditions must be reported.

(*1*) Description of exposure apparatus including design, type, dimensions, source of air, system for generating particulates and aerosols, method of conditioning air, treatment of exhaust air and the method of housing the animals in a test chamber.

(*2*) The equipment for measuring temperature, humidity, and particulate aerosol concentrations and size should be described.

(B) Exposure data. These must be tabulated and presented with mean values and a measure of variability (e.g., standard deviation) and should include:

(*1*) Airflow rates through the inhalation equipment.

(*2*) Temperature and humidity of air.

(*3*) Actual (analytical or gravimetric) concentration in the breathing zone.

(*4*) Nominal concentration (total amount of test substance fed into the inhalation equipment divided by volume of air).

(*5*) Particle size distribution, and calculated MMAD and geometric standard deviation.

(*6*) Explanation as to why the desired chamber concentration and/or particle size could not be achieved (if applicable) and the efforts taken to comply with this aspect of the guidelines.

(g) *Quality control.* A system must be developed and maintained to assure and document adequate performance of laboratory equipment. The study must be conducted in compliance with 40 CFR Part 792—Good Laborary Practice Standards.

(h) *References.* For additional background information on this test guideline, the following references should be consulted. These references are available for inspection at the TSCA Nonconfidential Information Center, Rm. NE-B607, Environmental Protection Agency, 401 M St., NW., Washington, DC, 12 noon to 4 p.m., Monday through Friday, except legal holidays.

(1) Benitz, K.F. *Measurement of Chronic Toxicity*. Methods of Toxicology. Ed. G.E. Paget. Blackwell, Oxford. pp. 82–131 (1970).

(2) Crofton K.M., Howard J.L., Moser V.C., Gill M.W., Leiter L.W., Tilson H.A., MacPhail, R.C. Interlaboratory Comparison of Motor Activity Experiments: Implication for Neurotoxicological Assessments. Neurotoxicol. Teratol. 13, 599–609. (1991)

(3) D'Aguanno, W. *Drug Safety Evaluation—Pre-Clinical Considerations. Industrial Pharmacology: Neuroleptic.* Vol. I, Ed. S. Fielding and H. Lal. Futura, Mt. Kisco, NY. pp. 317–332 (1974).

(4) Fitzhugh, O.G. *Chronic Oral Toxicity, Appraisal of the Safety of Chemicals in Foods, Drugs and Cosmetics.* The Association of Food and Drug Officials of the United States. pp. 36–45 (1959, 3rd Printing 1975).

(5) Goldenthal, E.I. and D'Aguanno, W. *Evaluation of Drugs, Appraisal of the Safety of Chemicals in Foods, Drugs, and Cosmetics.* The Association of Food and Drug Officials of the United States. pp. 60–67 (1959, 3rd Printing 1975).

(6) Organization for Economic Cooperation and Development. Guidelines for Testing of Chemicals, Section 4-Health Effects, Part 453 Combined Chronic Toxicity/Carcinogenicity Studies, Paris. (1981).

(7) Page, N.P. Chronic Toxicity and Carcinogenicity Guidelines. *Journal of Environmental Pathology and Toxicology* 11:161–182 (1977).

(8) Page, N.P. Concepts of a Bioassay Program in Environmental Carcinogenesis, Advances in Modern Toxicology. Vol.3, Ed. Kraybill and

Mehlman. Hemisphere, Washington, DC pp. 87–171 (1977)

(9) Sontag, J.M. et al. Guidelines for Carcinogen Bioassay in Small Rodents. NCI-CS-TR-1 (Bethesda: United States Cancer Institute, Division of Cancer Control and Prevention, Carcinogenesis Bioassay Program.

(10) Summary of the EPA Workshop on Carcinogenesis Bioassay via the Dermal Route. EPA Report 50/6–89–002; 50/6–89–003. Washington, DC.

(11) The Atlas Of Dermal Lesions, EPA Report 20T–004, U.S Environmental Protection Agency, Washington, DC.

[65 FR 78802, Dec. 15, 2000]

§ 799.9510 TSCA bacterial reverse mutation test.

(a) *Scope.* This section is intended to meet the testing requirements under section 4 of TSCA.

(1) The bacterial reverse mutation test uses amino-acid requiring strains of *Salmonella typhimurium* and *Escherichia coli* to detect point mutations, which involve substitution, addition or deletion of one or a few DNA base pairs. The principle of this bacterial reverse mutation test is that it detects mutations which revert mutations present in the test strains and restore the functional capability of the bacteria to synthesize an essential amino acid. The revertant bacteria are detected by their ability to grow in the absence of the amino acid required by the parent test strain.

(2) Point mutations are the cause of many human genetic diseases and there is substantial evidence that point mutations in oncogenes and tumor suppressor genes of somatic cells are involved in tumor formation in humans and experimental animals. The bacterial reverse mutation test is rapid, inexpensive and relatively easy to perform. Many of the test strains have several features that make them more sensitive for the detection of mutations, including responsive DNA sequences at the reversion sites, increased cell permeability to large molecules and elimination of DNA repair systems or enhancement of error-prone DNA repair processes. The specificity of the test strains can provide some useful information on the types of mutations that are induced by genotoxic agents. A very large data base of results for a wide variety of structures is available for bacterial reverse mutation tests and well-established methodologies have been developed for testing chemicals with different physico-chemical properties, including volatile compounds.

(b) *Source.* The source material used in developing this TSCA test guideline are the OECD replacement guidelines for 471 and 472 (February 1997). This source is available at the address in paragraph (g) of this section.

(c) *Definitions.* The following definitions apply to this section:

A reverse mutation test in either *Salmonella typhimurium* or *Escherichia coli* detects mutation in an amino-acid requiring strain (histidine or tryptophan, respectively) to produce a strain independent of an outside supply of amino-acid.

Base pair substitution mutagens are agents that cause a base change in DNA. In a reversion test this change may occur at the site of the original mutation, or at a second site in the bacterial genome.

Frameshift mutagens are agents that cause the addition or deletion of one or more base pairs in the DNA, thus changing the reading frame in the RNA

(d) *Initial considerations.* (1) The bacterial reverse mutation test utilizes prokaryotic cells, which differ from mammalian cells in such factors as uptake, metabolism, chromosome structure and DNA repair processes. Tests conducted *in vitro* generally require the use of an exogenous source of metabolic activation. *In vitro* metabolic activation systems cannot mimic entirely the mammalian *in vivo* conditions. The test therefore does not provide direct information on the mutagenic and carcinogenic potency of a substance in mammals.

(2) The bacterial reverse mutation test is commonly employed as an initial screen for genotoxic activity and, in particular, for point mutation-inducing activity. An extensive data base has demonstrated that many chemicals that are positive in this test also exhibit mutagenic activity in other tests. There are examples of mutagenic agents which are not detected by this

test; reasons for these shortcomings can be ascribed to the specific nature of the endpoint detected, differences in metabolic activation, or differences in bioavailability. On the other hand, factors which enhance the sensitivity of the bacterial reverse mutation test can lead to an overestimation of mutagenic activity.

(3) The bacterial reverse mutation test may not be appropriate for the evaluation of certain classes of chemicals, for example highly bactericidal compounds (e.g. certain antibiotics) and those which are thought (or known) to interfere specifically with the mammalian cell replication system (e.g. some topoisomerase inhibitors and some nucleoside analogues). In such cases, mammalian mutation tests may be more appropriate.

(4) Although many compounds that are positive in this test are mammalian carcinogens, the correlation is not absolute. It is dependent on chemical class and there are carcinogens that are not detected by this test because they act through other, non-genotoxic mechanisms or mechanisms absent in bacterial cells.

(e) *Test method*—(1) *Principle.* (i) Suspensions of bacterial cells are exposed to the test substance in the presence and in the absence of an exogenous metabolic activation system. In the plate incorporation method, these suspensions are mixed with an overlay agar and plated immediately onto minimal medium. In the preincubation method, the treatment mixture is incubated and then mixed with an overlay agar before plating onto minimal medium. For both techniques, after 2 or 3 days of incubation, revertant colonies are counted and compared to the number of spontaneous revertant colonies on solvent control plates.

(ii) Several procedures for performing the bacterial reverse mutation test have been described. Among those commonly used are the plate incorporation method, the preincubation method, the fluctuation method, and the suspension method. Suggestions for modifications for the testing of gases or vapors are described in the reference in paragraph (g)(12) of this section.

(iii) The procedures described in this section pertain primarily to the plate incorporation and preincubation methods. Either of them is acceptable for conducting experiments both with and without metabolic activation. Some compounds may be detected more efficiently using the preincubation method. These compounds belong to chemical classes that include short chain aliphatic nitrosamines, divalent metals, aldehydes, azo-dyes and diazo compounds, pyrollizidine alkaloids, allyl compounds and nitro compounds. It is also recognized that certain classes of mutagens are not always detected using standard procedures such as the plate incorporation method or preincubation method. These should be regarded as ''special cases'' and it is strongly recommended that alternative procedures should be used for their detection. The following ''special cases'' could be identified (together with examples of procedures that could be used for their detection): azo-dyes and diazo compounds (alterative procedures are described in the references in paragraphs (g)(3), (g)(5), (g)(6), and (g)(13) of this section), gases and volatile chemicals (alterative procedures are described in the references in paragraphs (g)(12), (g)(14), (g)(15), and (g)(16) of this section), and glycosides (alterative procedures are described in the references in paragraphs (g)(17) and (g)(18) of this section). A deviation from the standard procedure needs to be scientifically justified.

(2) *Description*—(i) *Preparations*—(A) *Bacteria.* (*1*) Fresh cultures of bacteria should be grown up to the late exponential or early stationary phase of growth (approximately 10^9 cells per ml). Cultures in late stationary phase should not be used. The cultures used in the experiment shall contain a high titre of viable bacteria. The titre may be demonstrated either from historical control data on growth curves, or in each assay through the determination of viable cell numbers by a plating experiment.

(*2*) The culture temperature shall be 37 °C.

(*3*) At least five strains of bacteria should be used. These should include four strains of *S. typhimurium* (TA1535; TA1537 or TA97a or TA97; TA98; and

TA100) that have been shown to be reliable and reproducibly responsive between laboratories. These four *S. typhimurium* strains have GC base pairs at the primary reversion site and it is known that they may not detect certain oxidizing mutagens, cross-linking agents, and hydrazines. Such substances may be detected by E. coli WP2 strains or *S. typhimurium* TA102 (see reference in paragraph (g)(19) of this section) which have an AT base pair at the primary reversion site. Therefore the recommended combination of strains is:

(*i*) *S. typhimurium* TA1535.

(*ii*) *S. typhimurium* TA1537 or TA97 or TA97a.

(*iii*) *S. typhimurium* TA98.

(*iv*) *S. typhimurium* TA100.

(*v*) *E. coli* WP2 *uvrA*, or *E. coli* WP2 *uvrA* (pKM101), or *S. typhimurium* TA102. In order to detect cross-linking mutagens it may be preferable to include TA102 or to add a DNA repair-proficient strain of *E.coli* [e.g. *E.coli* WP2 or *E.coli* WP2 (pKM101).]

(*4*) Established procedures for stock culture preparation, marker verification and storage should be used. The amino-acid requirement for growth should be demonstrated for each frozen stock culture preparation (histidine for *S. typhimurium* strains, and tryptophan for *E. coli* strains). Other phenotypic characteristics should be similarly checked, namely: the presence or absence of R-factor plasmids where appropriate [i.e. ampicillin resistance in strains TA98, TA100 and TA97a or TA97, WP2 *uvrA* and WP2 *uvrA* (pKM101), and ampicillin = tetracycline resistance in strain TA102]; the presence of characteristic mutations (i.e. rfa mutation in *S. typhimurium* through sensitivity to crystal violet, and *uvrA* mutation in *E. coli* or *uvrB* mutation in *S. typhimurium*, through sensitivity to ultra-violet light). The strains should also yield spontaneous revertant colony plate counts within the frequency ranges expected from the laboratory's historical control data and preferably within the range reported in the literature.

(B) *Medium.* An appropriate minimal agar (e.g. containing Vogel-Bonner minimal medium E and glucose) and an overlay agar containing histidine and biotin or tryptophan, to allow for a few cell divisions, shall be used. The procedures described in the references under paragraphs (g)(1), (g)(2), and (g)(9) of this section may be used for this analysis.

(C) *Metabolic activation.* Bacteria shall be exposed to the test substance both in the presence and absence of an appropriate metabolic activation system. The most commonly used system is a cofactor-supplemented post-mitochondrial fraction (S9) prepared from the livers of rodents treated with enzyme-inducing agents such as Aroclor 1254 (the system described in the references under paragraphs (g)(1) and (g)(2) of this section may be used) or a combination of phenobarbitone and β-naphthoflavone (the system described in the references under paragraphs (g)(18), (g)(20), and (g)(21) of this section may be used). The post-mitochondrial fraction is usually used at concentrations in the range from 5 to 30% v/v in the S9-mix. The choice and condition of a metabolic activation system may depend upon the class of chemical being tested. In some cases it may be appropriate to utilize more than one concentration of post-mitochondrial fraction. For azo-dyes and diazo-compounds, using a reductive metabolic activation system may be more appropriate (the system described in the references under paragraphs (g)(6) and (g)(13) of this section may be used).

(D) *Test substance/preparation.* Solid test substances should be dissolved or suspended in appropriate solvents or vehicles and diluted if appropriate prior to treatment of the bacteria. Liquid test substances may be added directly to the test systems and/or diluted prior to treatment. Fresh preparations should be employed unless stability data demonstrate the acceptability of storage.

(ii) *Test conditions*—(A) *Solvent/vehicle.* The solvent/vehicle should not be suspected of chemical reaction with the test substance and shall be compatible with the survival of the bacteria and the S9 activity (for further information see the reference in paragraph (g)(22) of this section). If other than well-known

solvent/vehicles are used, their inclusion should be supported by data indicating their compatibility. It is recommended that wherever possible, the use of an aqueous solvent/vehicle be considered first. When testing water-unstable substances, the organic solvents used be free of water.

(B) *Exposure concentrations.* (*1*) Amongst the criteria to be taken into consideration when determining the highest amount of test substance to be used are cytotoxicity and solubility in the final treatment mixture. It may be useful to determine toxicity and insolubility in a preliminary experiment. Cytotoxicity may be detected by a reduction in the number of revertant colonies, a clearing or diminution of the background lawn, or the degree of survival of treated cultures. The cytotoxicity of a substance may be altered in the presence of metabolic activation systems. Insolubility should be assessed as precipitation in the final mixture under the actual test conditions and evident to the unaided eye. The recommended maximum test concentration for soluble non-cytotoxic substances is 5 mg/plate or 5 µl/plate. For non-cytotoxic substances that are not soluble at 5 mg/plate or 5 µl/plate, one or more concentrations tested should be insoluble in the final treatment mixture. Test substances that are cytotoxic already below 5mg/plate or 5 µl/plate should be tested up to a cytotoxic concentration. The precipitate should not interfere with the scoring.

(*2*) At least five different analyzable concentrations of the test substance shall be used with approximately half log (i.e. √10) intervals between test points for an initial experiment. Smaller intervals may be appropriate when a concentration-response is being investigated.

(*3*) Testing above the concentration of 5 mg/plate or 5 µl/plate may be considered when evaluating substances containing substantial amounts of potentially mutagenic impurities.

(C) *Controls.* (*1*) Concurrent strain-specific positive and negative (solvent or vehicle) controls, both with and without metabolic activation, shall be included in each assay. Positive control concentrations that demonstrate the effective performance of each assay should be selected.

(*2*)(*i*) For assays employing a metabolic activation system, the positive control reference substance(s) should be selected on the basis of the type of bacteria strains used. The following chemicals are examples of suitable positive controls for assays with metabolic activation:

Chemical	CAS No.
9,10-Dimethylanthracene	[CAS no. 781–43–1]
7,12-Dimethylbenzanthracene	[CAS no. 57–97–6]
Congo Red (for the reductive metabolic activation method).	[CAS no. 573–58–0]
Benzo(a)pyrene	[CAS no. 50–32–8]
Cyclophosphamide (monohydrate)	[CAS no. 50–18–0] [CAS no. 6055–19–2]
2-Aminoanthracene	[CAS no. 613–13–8]

(*ii*) 2-Aminoanthracene should not be used as the sole indicator of the efficacy of the S9-mix. If 2-aminoanthracene is used, each batch of S9 should also be characterized with a mutagen that requires metabolic activation by microsomal enzymes, e.g., benzo(a)pyrene, dimethylbenzanthracene.

(*3*) For assays performed without metabolic activation system, examples of strain-specific positive controls are:

Chemical	CAS No.	Strain
(a) Sodium azide	[CAS no. 26628–22–8]	TA1535 and TA100
(b) 2-Nitrofluorene	[CAS no. 607–57–8]	TA 98
(c) 9-Aminoacridine or ICR 191	[CAS no. 90–45–9] or [CAS no. 17070–45–0]	TA1537, TA97 and TA97a
(d) Cumene hydroperoxide	[CAS no. 80–15–9]	TA102
(e) Mitomycin C	[CAS no. 50–07–7]	WP2 *uvrA* and TA102
(f) N-Ethyl-N-nitro-N-nitrosoguanidine or 4-nitroquinoline 1-oxide	[CAS no. 70–25–7] or [CAS no. 56–57–5]	WP2, WP2 *uvrA* and WP2 *uvrA* (pKM101)
(g) Furylfuramide (AF-2)	[CAS no. 3688–53–7]	Plasmid-containing strains

(*4*) Other appropriate positive control reference substances may be used. The use of chemical class-related positive control chemicals may be considered, when available.

(*5*) Negative controls, consisting of solvent or vehicle alone, without test substance, and otherwise treated in the same way as the treatment groups, shall be included. In addition, untreated controls should also be used unless there are historical control data demonstrating that no deleterious or mutagenic effects are induced by the chosen solvent.

(3) *Procedure*—(i) *Treatment with test substance.* (A) For the plate incorporation method, without metabolic activation, usually 0.05 ml or 0.1 ml of the test solutions, 0.1 ml of fresh bacterial culture (containing approximately 10^8 viable cells) and 0.5 ml of sterile buffer are mixed with 2.0 ml of overlay agar. For the assay with metabolic activation, usually 0.5 ml of metabolic activation mixture containing an adequate amount of post-mitochondrial fraction (in the range from 5 to 30% v/v in the metabolic activation mixture) are mixed with the overlay agar (2.0 ml), together with the bacteria and test substance/test solution. The contents of each tube are mixed and poured over the surface of a minimal agar plate. The overlay agar is allowed to solidify before incubation.

(B) For the preincubation method the test substance/test solution is preincubated with the test strain (containing approximately 10^8 viable cells) and sterile buffer or the metabolic activation system (0.5 ml) usually for 20 min. or more at 30–37 °C prior to mixing with the overlay agar and pouring onto the surface of a minimal agar plate. Usually, 0.05 or 0.1 ml of test substance/test solution, 0.1 ml of bacteria, and 0.5 ml of S9-mix or sterile buffer, are mixed with 2.0 ml of overlay agar. Tubes should be aerated during pre-incubation by using a shaker.

(C) For an adequate estimate of variation, triplicate plating should be used at each dose level. The use of duplicate plating is acceptable when scientifically justified. The occasional loss of a plate does not necessarily invalidate the assay.

(D) Gaseous or volatile substances should be tested by appropriate methods, such as in sealed vessels (methods described in the references under paragraphs (g)(12), (g)(14), (g)(15), and (g)(16) of this section may be used).

(ii) *Incubation.* All plates in a given assay shall be incubated at 37 °C for 48–72 hrs. After the incubation period, the number of revertant colonies per plate is counted.

(f) *Data and reporting*—(1) *Treatment of results.* (i) Data shall be presented as the number of revertant colonies per plate. The number of revertant colonies on both negative (solvent control, and untreated control if used) and positive control plates shall also be given.

(ii) Individual plate counts, the mean number of revertant colonies per plate and the standard deviation shall be presented for the test substance and positive and negative (untreated and/or solvent) controls.

(iii) There is no requirement for verification of a clear positive response. Equivocal results shall be clarified by further testing preferably using a modification of experimental conditions. Negative results need to be confirmed on a case-by-case basis. In those cases where confirmation of negative results is not considered necessary, justification should be provided. Modification of study parameters to extend the range of conditions assessed should be considered in follow-up experiments. Study parameters that might be modified include the concentration spacing, the method of treatment (plate incorporation or liquid preincubation), and metabolic activation conditions.

(2) *Evaluation and interpretation of results.* (i) There are several criteria for determining a positive result, such as a concentration-related increase over the range tested and/or a reproducible increase at one or more concentrations in the number of revertant colonies per plate in at least one strain with or without metabolic activation system. Biological relevance of the results should be considered first. Statistical methods may be used as an aid in evaluating the test results. However, statistical significance should not be the only determining factor for a positive response.

(ii) A test substance for which the results do not meet the criteria described under paragraph (f)(2)(i) of this section is considered non-mutagenic in this test

(iii) Although most experiments will give clearly positive or negative results, in rare cases the data set will preclude making a definite judgement about the activity of the test substance. Results may remain equivocal or questionable regardless of the number of times the experiment is repeated.

(iv) Positive results from the bacterial reverse mutation test indicate that a substance induces point mutations by base substitutions or frameshifts in the genome of either *Salmonella typhimurium* and/or *Escherichia coli*. Negative results indicate that under the test conditions, the test substance is not mutagenic in the tested species.

(3) *Test report*. The test report shall include the following information:

(i) Test substance:

(A) Identification data and CAS no., if known.

(B) Physical nature and purity.

(C) Physicochemical properties relevant to the conduct of the study.

(D) Stability of the test substance, if known.

(ii) Solvent/vehicle:

(A) Justification for choice of solvent/vehicle.

(B) Solubility and stability of the test substance in solvent/vehicle, if known.

(iii) Strains:

(A) Strains used.

(B) Number of cells per culture.

(C) Strain characteristics.

(iv) Test conditions:

(A) Amount of test substance per plate (mg/plate or ml/plate) with rationale for selection of dose and number of plates per concentration.

(B) Media used.

(C) Type and composition of metabolic activation system, including acceptability criteria.

(D) Treatment procedures.

(v) Results:

(A) Signs of toxicity.

(B) Signs of precipitation.

(C) Individual plate counts.

(D) The mean number of revertant colonies per plate and standard deviation.

(E) Dose-response relationship, where possible.

(F) Statistical analyses, if any.

(G) Concurrent negative (solvent/vehicle) and positive control data, with ranges, means and standard deviations.

(H) Historical negative (solvent/vehicle) and positive control data, with e.g. ranges, means and standard deviations.

(vi) Discussion of the results.

(vii) Conclusion.

(g) *References*. For additional background information on this test guideline, the following references should be consulted. These references are available for inspection at the TSCA Nonconfidential Information Center, Rm. NE-B607, Environmental Protection Agency, 401 M St., SW., Washington, DC, 12 noon to 4 p.m., Monday through Friday, except legal holidays.

(1) Ames, B.N., McCann, J., and Yamasaki, E. Methods for Detecting Carcinogens and Mutagens With the Salmonella/Mammalian-Microsome Mutagenicity Test. *Mutation Research*. 31, 347–364 (1975).

(2) Maron, D.M. and Ames, B.N. Revised Methods for the Salmonella Mutagenicity Test. *Mutation Research*. 113, 173–215 (1983).

(3) Gatehouse, D., Haworth, S., Cebula, T., Gocke, E., Kier, L., Matsushima, T., Melcion, C., Nohmi, T., Venitt, S., and Zeiger, E. Recommendations for the Performance of Bacterial Mutation Assays. *Mutation Research*. 312, 217–233 (1994).

(4) Kier, L.D., Brusick, D.J., Auletta, A.E., Von Halle, E.S., Brown, M.M., Simmon, V.F., Dunkel, V., McCann, J., Mortelmans, K., Prival, M., Rao, T.K., and Ray V. The Salmonella Typhimurium/Mammalian Microsomal Assay: A Report of the U.S. Environmental Protection Agency Gene-Tox Program. *Mutation Research*. 168, 69–240 (1986).

(5) Yahagi, T., Degawa, M., Seino, Y.Y., Matsushima, T., Nagao, M., Sugimura, T., and Hashimoto, Y. Mutagenicity of Carcinogen Azo Dyes and Their Derivatives. *Cancer Letters*, 1. 91–96 (1975).

(6) Matsushima, M., Sugimura, T., Nagao, M., Yahagi, T., Shirai, A., and

Sawamura, M. Factors Modulating Mutagenicity Microbial Tests. Eds. Norpoth, K.H. and Garner, R.C. *Short-Term Test Systems for Detecting Carcinogens* (Springer, Berlin-Heidelberg-New York, 1980) pp. 273–285.

(7) Gatehouse, D.G., Rowland, I.R., Wilcox, P., Callender, R.D., and Foster, R. Bacterial Mutation Assays. Ed. Kirkland, D.J. *Basic Mutagenicity Tests.* UKEMS Part 1 Revised (Cambridge University Press, 1990) pp. 13–61.

(8) Aeschbacher, H.U., Wolleb, U., and Porchet, L.J. Liquid Preincubation Mutagenicity Test for Foods. *Food Safety*. 8, 167–177 (1987).

(9) Green, M.H.L., Muriel, W.J., and Bridges, B.A. Use of a Simplified Fluctuation Test to Detect Low Levels of Mutagens. *Mutation Research*. 38, 33–42 (1976).

(10) Hubbard, S.A., Green, M.H.L., Gatehouse, D., and J.W. Bridges. The Fluctuation Test in Bacteria. 2nd Edition. Ed. Kilbey, B.J., Legator, M., Nichols, W., and Ramel C. *Handbook of Mutagenicity Test Procedures* (Elsevier, Amsterdam-New York-Oxford, 1984) pp. 141–161.

(11) Thompson, E.D. and Melampy, P.J. An Examination of the Quantitative Suspension Assay for Mutagenesis With Strains of Salmonella Typhimurium. *Environmental Mutagenesis.* 3, 453–465 (1981).

(12) Araki, A., Noguchi, T., Kato, F., and T. Matsushima. Improved Method for Mutagenicity Testing of Gaseous Compounds by Using a Gas Sampling Bag. *Mutation Research*. 307, 335–344 (1994).

(13) Prival, M.J., Bell, S.J., Mitchell, V.D., Reipert, M.D., and Vaughn, V.L. Mutagenicity of Benzidine and Benzidine-Congener Dyes and Selected Monoazo Dyes in a Modified Salmonella Assay. *Mutation Research*. 136, 33–47 (1984).

(14) Zeiger, E., Anderson, B. E., Haworth, S, Lawlor, T., and Mortelmans, K. Salmonella Mutagenicity Tests. V. Results from the Testing of 311 Chemicals. Environ. Mol. *Mutagen*. 19, 2–141 (1992).

(15) Simmon, V., Kauhanen, K., and Tardiff, R.G. Mutagenic Activity of Chemicals Identified in Drinking Water. Ed. Scott, D., Bridges, B., and Sobels, F. *Progress in Genetic Toxicology* (Elsevier, Amsterdam, 1977) pp. 249–258.

(16) Hughes, T.J., Simmons, D.M., Monteith, I.G., and Claxton, L.D. Vaporization Technique to Measure Mutagenic Activity of Volatile Organic Chemicals in the Ames/Salmonella Assay. *Environmental Mutagenesis.* 9, 421–441 (1987).

(17) Matsushima, T., Matsumoto, A., Shirai, M., Sawamura, M., and Sugimura, T. Mutagenicity of the Naturally Occurring Carcinogen Cycasin and Synthetic Methylazoxy Methane Conjugates in Salmonella Typhimurium. *Cancer Research*. 39, 3780–3782 (1979).

(18) Tamura, G., Gold, C., Ferro-Luzzi, A., and Ames. B.N. Fecalase: A Model for Activation of Dietary Glycosides to Mutagens by Intestinal Flora. Proc. National Academy of Science. (USA, 1980) 77, 4961–4965.

(19) Wilcox, P., Naidoo, A., Wedd, D. J., and Gatehouse, D. G. Comparison of Salmonella Typhimurium TA 102 With Escherichia Coli WP2 Tester Strains. *Mutagenesis.* 5, 285–291 (1990).

(20) Matsushima, T., Sawamura, M., Hara, K., and Sugimura, T. A Safe Substitute for Polychlorinated Biphenyls as an Inducer of Metabolic Activation Systems. Ed. F.J. de Serres *et al. In Vitro Metabolic Activation in Mutagenesis Testing.* (Elsevier, North Holland, 1976) pp. 85–88.

(21) Elliott, B.M., Combes, R.D., Elcombe, C.R., Gatehouse, D.G., Gibson, G.G., Mackay, J.M., and Wolf, R.C. Alternatives to Aroclor 1254-Induced S9 in *In Vitro* Genotoxicity Assays. *Mutagenesis.* 7, 175–177 (1992).

(22) Maron, D., Katzenellenbogen, J., and Ames, B.N. Compatibility of Organic Solvents With the Salmonella/Microsome Test. *Mutation Research*. 88, 343–350 (1981).

(23) Claxton, L.D., Allen, J., Auletta, A., Mortelmans, K., Nestmann, E., and Zeiger, E. Guide for the Salmonella Typhimurium/Mammalian Microsome Tests for Bacterial Mutagenicity. *Mutation Research*. 189, 83–91 (1987).

(24) Mahon, G.A.T., Green, M.H.L., Middleton, B., Mitchell, I., Robinson, W.D., and Tweats, D.J. Analysis of Data from Microbial Colony Assays. UKEMS Sub-Committee on Guidelines for Mutagenicity Testing Part II. Ed.

Kirkland, D.J. *Statistical Evaluation of Mutagenicity Test Data* (Cambridge University Press, 1989) pp. 28–65.

[62 FR 43824, Aug. 15, 1997, as amended at 64 FR 35079, June 30, 1999]

§ 799.9530 TSCA in vitro mammalian cell gene mutation test.

(a) *Scope.* This section is intended to meet the testing requirements under section 4 of TSCA. The *in vitro* mammalian cell gene mutation test can be used to detect gene mutations induced by chemical substances. Suitable cell lines include L5178Y mouse lymphoma cells, the CHO, AS52 and V79 lines of Chinese hamster cells, and TK6 human lymphoblastoid cells under paragraph (g)(1) of this section. In these cell lines the most commonly-used genetic endpoints measure mutation at thymidine kinase (TK) and hypoxanthine-guanine phosphoribosyl transferase (HPRT), and a transgene of xanthine-guanine phosphoribosyl transferase (XPRT). The TK, HPRT and XPRT mutation tests detect different spectra of genetic events. The autosomal location of TK and XPRT may allow the detection of genetic events (e.g. large deletions) not detected at the HPRT locus on X-chromosomes (For a discussion see the references in paragraphs (g)(2), (g)(3), (g)(4),(g)(5), and (g)(6) of this section).

(b) *Source.* The source material used in developing this TSCA test guideline is the OECD guideline 476 (February 1997). This source is available at the address in paragraph (g) of this section.

(c) *Definitions.* The following definitions apply to this section:

Base pair substitution mutagens are substances which cause substitution of one or several base pairs in the DNA.

Forward mutation is a gene mutation from the parental type to the mutant form which gives rise to an alteration or a loss of the enzymatic activity or the function of the encoded protein.

Frameshift mutagens are substances which cause the addition or deletion of single or multiple base pairs in the DNA molecule.

Mutant frequency is the number of mutant cells observed divided by the number of viable cells.

Phenotypic expression time is a period during which unaltered gene products are depleted from newly mutated cells.

Relative suspension growth is an increase in cell number over the expression period relative to the negative control.

Relative total growth is an increase in cell number over time compared to a control population of cells; calculated as the product of suspension growth relative to the negative control times cloning efficiency relative to negative control.

Survival is the cloning efficiency of the treated cells when plated at the end of the treatment period; survival is usually expressed in relation to the survival of the control cell population.

Viability is the cloning efficiency of the treated cells at the time of plating in selective conditions after the expression period.

(d) *Initial considerations.* (1) In the *in vitro* mammalian cell gene mutation test, cultures of established cell lines or cell strains can be used. The cells used are selected on the basis of growth ability in culture and stability of the spontaneous mutation frequency. Tests conducted *in vitro* generally require the use of an exogenous source of metabolic activation. This metabolic activation system cannot mimic entirely the mammalian *in vivo* conditions. Care should be taken to avoid conditions which would lead to results not reflecting intrinsic mutagenicity. Positive results which do not reflect intrinsic mutagenicity may arise from changes in pH, osmolality or high levels of cytotoxicity.

(2) This test is used to screen for possible mammalian mutagens and carcinogens. Many compounds that are positive in this test are mammalian carcinogens; however, there is not a perfect correlation between this test and carcinogenicity. Correlation is dependent on chemical class and there is increasing evidence that there are carcinogens that are not detected by this test because they appear to act through other, non-genotoxic mechanisms or mechanisms absent in bacterial cells.

(e) *Test method*—(1) *Principle.* (i) Cells deficient in thymidine kinase (TK) due

to the mutation $TK^{=/-}$ -≤ $TK^{-/-}$ are resistant to the cytotoxic effects of the pyrimidine analogue trifluorothymidine (TFT). Thymidine kinase proficient cells are sensitive to TFT, which causes the inhibition of cellular metabolism and halts further cell division. Thus mutant cells are able to proliferate in the presence of TFT, whereas normal cells, which contain thymidine kinase, are not. Similarly, cells deficient in HPRT or XPRT are selected by resistance to 6-thioguanine (TG) or 8-azaguanine (AG). The properties of the test substance should be considered carefully if a base analogue or a compound related to the selective agent is tested in any of the mammalian cell gene mutation tests. For example, any suspected selective toxicity by the test substance for mutant and non-mutant cells should be investigated. Thus, performance of the selection system/agent shall be confirmed when testing chemicals structurally related to the selective agent.

(ii) Cells in suspension or monolayer culture shall be exposed to the test substance, both with and without metabolic activation, for a suitable period of time and subcultured to determine cytotoxicity and to allow phenotypic expression prior to mutant selection. Cytotoxicity is usually determined by measuring the relative cloning efficiency (survival) or relative total growth of the cultures after the treatment period. The treated cultures shall be maintained in growth medium for a sufficient period of time, characteristic of each selected locus and cell type, to allow near-optimal phenotypic expression of induced mutations. Mutant frequency is determined by seeding known numbers of cells in medium containing the selective agent to detect mutant cells, and in medium without selective agent to determine the cloning efficiency (viability). After a suitable incubation time, colonies shall be counted. The mutant frequency is derived from the number of mutant colonies in selective medium and the number of colonies in non-selective medium.

(2) *Description*—(i) *Preparations*—(A) *Cells.* (*1*) A variety of cell types are available for use in this test including subclones of L5178Y, CHO, CHO-AS52, V79, or TK6 cells. Cell types used in this test should have a demonstrated sensitivity to chemical mutagens, a high cloning efficiency and a stable spontaneous mutant frequency. Cells should be checked for mycoplasma contamination and should not be used if contaminated.

(*2*) The test should be designed to have a predetermined sensitivity and power. The number of cells, cultures, and concentrations of test substance used should reflect these defined parameters. The parameters discussed in the reference under paragraph (g)(13) of this section may be used. The minimal number of viable cells surviving treatment and used at each stage in the test should be based on the spontaneous mutation frequency. A general guide is to use a cell number which is at least ten times the inverse of the spontaneous mutation frequency. However, it is recommended to utilize at least 10^6 cells. Adequate historical data on the cell system used should be available to indicate consistent performance of the test.

(B) *Media and culture conditions.* Appropriate culture media and incubation conditions (culture vessels, temperature, CO_2 concentration and humidity) shall be used. Media should be chosen according to the selective systems and cell type used in the test. It is particularly important that culture conditions should be chosen that ensure optimal growth of cells during the expression period and colony forming ability of both mutant and non-mutant cells.

(C) *Preparation of cultures.* Cells are propagated from stock cultures, seeded in culture medium and incubated at 37 °C. Prior to use in this test, cultures may need to be cleansed of pre-existing mutant cells.

(D) *Metabolic activation.* Cells shall be exposed to the test substance both in the presence and absence of an appropriate metabolic activation system. The most commonly used system is a co-factor-supplemented post-mitochondrial fraction (S9) prepared from the livers of rodents treated with enzyme-inducing agents such as Aroclor 1254 or a combination of phenobarbitone and β-naphthoflavone. The post-mitochondrial fraction is usually used at concentrations in the range from 1–10% v/v in the final test

medium. The choice and condition of a metabolic activation system may depend upon the class of chemical being tested. In some cases it may be appropriate to utilize more than one concentration of post-mitochondrial fraction. A number of developments, including the construction of genetically engineered cell lines expressing specific activating enzymes, may provide the potential for endogenous activation. The choice of the cell lines used should be scientifically justified (e.g. by the relevance of the cytochrome P450 isoenzyme to the metabolism of the test substance).

(E) *Test substance/preparations.* Solid test substances should be dissolved or suspended in appropriate solvents or vehicles and diluted if appropriate prior to treatment of the cells. Liquid test substances may be added directly to the test systems and/or diluted prior to treatment. Fresh preparations should be employed unless stability data demonstrate the acceptability of storage.

(ii) *Test conditions*—(A) *Solvent/vehicle.* The solvent/vehicle shall not be suspected of chemical reaction with the test substance and shall be compatible with the survival of the cells and the S9 activity. If other than well-known solvent/vehicles are used, their inclusion should be supported by data indicating their compatibility. It is recommended that wherever possible, the use of an aqueous solvent/vehicle be considered first. When testing water-unstable substances, the organic solvents used should be free of water. Water can be removed by adding a molecular sieve.

(B) *Exposure concentrations.* (*1*) Among the criteria to be considered when determining the highest concentration are cytotoxicity and solubility in the test system and changes in pH or osmolality.

(*2*) Cytotoxicity should be determined with and without metabolic activation in the main experiment using an appropriate indicator of cell integrity and growth, such as relative cloning efficiency (survival) or relative total growth. It may be useful to determine cytotoxicity and solubility in a preliminary experiment.

(*3*) At least four analyzable concentrations shall be used. Where there is cytotoxicity, these concentrations shall cover a range from the maximum to little or no toxicity; this will usually mean that the concentration levels should be separated by no more than a factor between 2 and $\sqrt{10}$. If the maximum concentration is based on cytotoxicity then it shall result in approximately 10–20% but not less than 10% relative survival (relative cloning efficiency) or relative total growth. For relatively non-cytotoxic compounds the maximum concentration should be 5 mg/ml, 5 µl/ml, or 0.01 M, whichever is the lowest.

(*4*) Relatively insoluble substances should be tested up to or beyond their limit of solubility under culture conditions. Evidence of insolubility should be determined in the final treatment medium to which cells are exposed. It may be useful to assess solubility at the beginning and end of the treatment, as solubility can change during the course of exposure in the test system due to presence of cells, S9, serum etc. Insolubility can be detected by using the unaided eye. The precipitate should not interfere with the scoring.

(C) *Controls.* (*1*) Concurrent positive and negative (solvent or vehicle) controls both with and without metabolic activation shall be included in each experiment. When metabolic activation is used the positive control chemical shall be one that requires activation to give a mutagenic response.

(*2*) Examples of positive control substances include:

Metabolic Activation condition	Locus	Chemical	CAS No.
Absence of exogenous metabolic activation	HPRT	Ethylmethanesulfonate.	[CAS no. 62–50–0]
	.....	Ethylnitrosourea	[CAS no. 759–73–9]
	TK (small and large colonies).	Methylmethanesulfonate.	[CAS no. 66–27–3]
	XPRT	Ethylmethanesulfonate.	[CAS no. 62–50–0]
		Ethylnitrosourea	[CAS no. 759–73–9]

Metabolic Activation condition	Locus	Chemical	CAS No.
Presence of exogenous metabolic activation.	HPRT	3-Methylcholanthrene.	[CAS no. 56–49–5]
		N-Nitrosodimethylamine.	[CAS no. 62–75–9]
		7,12-Dimethylbenzanthracene.	[CAS no. 57–97–6]
	TK (small and large colonies).	Cyclophosphamide (monohydrate).	[CAS no. 50–18–0] [CAS no. 6055–19–2]
		Benzo(a)pyrene	[CAS no. 50–32–8]
		3-Methylcholanthrene.	[CAS no. 56–49–5]
	XPRT	N-Nitrosodimethylamine (for high levels of S-9).	[CAS no. 62–75–9]
		Benzo(a)pyrene	[CAS no. 50–32–8]

(*3*) Other appropriate positive control reference substances may be used, e.g., if a laboratory has a historical data base on 5-Bromo 2′-deoxyuridine [CAS No. 59–14–3], this reference substance could be used as well. The use of chemical class-related positive control chemicals may be considered, when available.

(*4*) Negative controls, consisting of solvent or vehicle alone in the treatment medium, and treated in the same way as the treatment groups shall be included. In addition, untreated controls should also be used unless there are historical control data demonstrating that no deleterious or mutagenic effects are induced by the chosen solvent.

(3) *Procedure*—(i) *Treatment with test substance.* (A) Proliferating cells shall be exposed to the test substance both with and without metabolic activation. Exposure shall be for a suitable period of time (usually 3 to 6 hrs is effective). Exposure time may be extended over one or more cell cycles.

(B) Either duplicate or single treated cultures may be used at each concentration tested. When single cultures are used, the number of concentrations should be increased to ensure an adequate number of cultures for analysis (e.g. at least eight analyzsable concentrations). Duplicate negative (solvent) control cultures should be used.

(C) Gaseous or volatile substances should be tested by appropriate methods, such as in sealed culture vessels. Methods described in the references under paragraphs (g)(20) and (g)(21) of this section may be used.

(ii) *Measurement of survival, viability, and mutant frequency.* (A) At the end of the exposure period, cells shall be washed and cultured to determine survival and to allow for expression of the mutant phenotype. Measurement of cytotoxicity by determining the relative cloning efficiency (survival) or relative total growth of the cultures is usually initiated after the treatment period.

(B) Each locus has a defined minimum time requirement to allow near optimal phenotypic expression of newly induced mutants (HPRT and XPRT require at least 6–8 days, and TK at least 2 days). Cells are grown in medium with and without selective agent(s) for determination of numbers of mutants and cloning efficiency, respectively. The measurement of viability (used to calculate mutant frequency) is initiated at the end of the expression time by plating in non-selective medium.

(C) If the test substance is positive in the L5178Y $TK^{=/-}$ test, colony sizing should be performed on at least one of the test cultures (the highest positive concentration) and on the negative and positive controls. If the test substance is negative in the L5178Y $TK^{=/-}$ test, colony sizing should be performed on the negative and positive controls. In studies using TK6$TK^{=/-}$, colony sizing may also be performed.

(f) *Data and reporting*—(1) *Treatment of results.* (i) Data shall include cytotoxicity and viability determination, colony counts and mutant frequencies for the treated and control cultures. In the case of a positive response in the L5178Y $TK^{=/-}$ test, colonies are scored using the criteria of small and large colonies on at least one concentration of the test substance (highest positive concentration) and on the negative and positive control. The molecular and cytogenetic nature of both large and small colony mutants

has been explored in detail and is discussed in the references under paragraphs (g)(22) and (g)(23) of this section. In the $TK^{+/-}$ test, colonies are scored using the criteria of normal growth (large) and slow growth (small) colonies (a scoring system similar to the one described in the reference under paragraph (g)(24) of this section may be used). Mutant cells that have suffered the most extensive genetic damage have prolonged doubling times and thus form small colonies. This damage typically ranges in scale from the losses of the entire gene to karyotypically visible chromosome aberrations. The induction of small colony mutants has been associated with chemicals that induce gross chromosome aberrations. Less seriously affected mutant cells grow at rates similar to the parental cells and form large colonies.

(ii) Survival (relative cloning efficiencies) or relative total growth shall be given. Mutant frequency shall be expressed as number of mutant cells per number of surviving cells.

(iii) Individual culture data shall be provided. Additionally, all data shall be summarized in tabular form.

(iv) There is no requirement for verification of a clear positive response. Equivocal results shall be clarified by further testing preferably using a modification of experimental conditions. Negative results need to be confirmed on a case-by-case basis. In those cases where confirmation of negative results is not considered necessary, justification should be provided. Modification of study parameters to extend the range of conditions assessed should be considered in follow-up experiments for either equivocal or negative results. Study parameters that might be modified include the concentration spacing, and the metabolic activation conditions.

(2) *Evaluation and interpretation of results.* (i) There are several criteria for determining a positive result, such as a concentration-related, or a reproducible increase in mutant frequency. Biological relevance of the results should be considered first. Statistical methods may be used as an aid in evaluating the test results. Statistical significance should not be the only determining factor for a positive response.

(ii) A test substance, for which the results do not meet the criteria described in paragraph (f)(2)(i) of this section is considered non-mutagenic in this system.

(iii) Although most studies will give clearly positive or negative results, in rare cases the data set will preclude making a definite judgement about the activity of the test substance. Results may remain equivocal or questionable regardless of the number of times the experiment is repeated.

(iv) Positive results for an *in vitro* mammalian cell gene mutation test indicate that the test substance induces gene mutations in the cultured mammalian cells used. A positive concentration-response that is reproducible is most meaningful. Negative results indicate that, under the test conditions, the test substance does not induce gene mutations in the cultured mammalian cells used.

(3) *Test report.* The test report shall include the following information:

(i) Test substance:

(A) Identification data and CAS no., if known.

(B) Physical nature and purity.

(C) Physicochemical properties relevant to the conduct of the study.

(D) Stability of the test substance.

(ii) Solvent/vehicle:

(A) Justification for choice of vehicle/solvent.

(B) Solubility and stability of the test substance in solvent/vehicle, if known.

(iii) Cells:

(A) Type and source of cells.

(B) Number of cell cultures.

(C) Number of cell passages, if applicable.

(D) Methods for maintenance of cell cultures, if applicable.

(E) Absence of mycoplasma.

(iv) Test conditions:

(A) Rationale for selection of concentrations and number of cell cultures including e.g., cytotoxicity data and solubility limitations, if available.

(B) Composition of media, CO_2 concentration.

(C) Concentration of test substance.

(D) Volume of vehicle and test substance added.

(E) Incubation temperature.

(F) Incubation time.

(G) Duration of treatment.

(H) Cell density during treatment.

(I) Type and composition of metabolic activation system including acceptability criteria.

(J) Positive and negative controls.

(K) Length of expression period (including number of cells seeded, and subcultures and feeding schedules, if appropriate).

(L) Selective agent(s).

(M) Criteria for considering tests as positive, negative or equivocal.

(N) Methods used to enumerate numbers of viable and mutant cells.

(O) Definition of colonies of which size and type are considered (including criteria for ''small'' and ''large'' colonies, as appropriate).

(v) Results:

(A) Signs of toxicity.

(B) Signs of precipitation.

(C) Data on pH and osmolality during the exposure to the test substance, if determined.

(D) Colony size if scored for at least negative and positive controls.

(E) Laboratory's adequacy to detect small colony mutants with the L5178Y $TK^{+/-}$ system, where appropriate.

(F) Dose-response relationship, where possible.

(G) Statistical analyses, if any.

(H) Concurrent negative (solvent/vehicle) and positive control data.

(I) Historical negative (solvent/vehicle) and positive control data with ranges, means, and standard deviations.

(J) Mutant frequency.

(vi) Discussion of the results.

(vii) Conclusion.

(g) *References.* For additional background information on this test guideline, the following references should be consulted. These references are available for inspection at the TSCA Nonconfidential Information Center, Rm. NE-B607, Environmental Protection Agency, 401 M St., SW., Washington, DC, 12 noon to 4 p.m., Monday through Friday, except legal holidays.

(1) Chu, E.H.Y. and Malling, H.V. Mammalian Cell Genetics. II. Chemical Induction of Specific Locus Mutations in Chinese Hamster Cells *In Vitro,* Proc. National Academy Science (USA, 1968) 61, 1306–1312.

(2) Liber, H.L. and Thilly, W.G. Mutation Assay at the Thymidine Kinase Locus in Diploid Human Lymphoblasts. *Mutation Research*. 94, 467–485 (1982).

(3) Moore, M.M., Harrington-Brock, K., Doerr, C.L., and Dearfield, K.L. Differential Mutant Quantitation at the Mouse Lymphoma TK and CHO HGPRT Loci. *Mutagenesis*. 4, 394–403 (1989).

(4) Aaron, C.S. and Stankowski, Jr., L.F. Comparison of the AS52/XPRT and the CHO/HPRT Assays: Evaluation of Six Drug Candidates. *Mutation Research*. 223, 121–128 (1989).

(5) Aaron, C.S., Bolcsfoldi, G., Glatt, H.R., Moore, M., Nishi, Y., Stankowski, L., Theiss, J., and Thompson, E. Mammalian Cell Gene Mutation Assays Working Group Report. Report of the International Workshop on Standardization of Genotoxicity Test Procedures. *Mutation Research*. 312, 235–239 (1994).

(6) Scott, D., Galloway, S.M., Marshall, R.R., Ishidate, M., Brusick, D., Ashby, J., and Myhr, B.C. Genotoxicity Under Extreme Culture Conditions. A report from ICPEMC Task Group 9. *Mutation Research*. 257, 147–204 (1991).

(7) Clive, D., McCuen, R., Spector, J.F.S., Piper, C., and Mavournin, K.H. Specific Gene Mutations in L5178Y Cells in Culture. A Report of the U.S. Environmental Protection Agency Gene-Tox Program. *Mutation Research*. 115, 225–251 (1983).

(8) Li, A.P., Gupta, R.S., Heflich, R.H., and Wasson, J. S. A Review and Analysis of the Chinese Hamster Ovary/Hypoxanthine Guanine Phosphoribosyl Transferase System to Determine the Mutagenicity of Chemical Agents: A Report of Phase III of the U.S. Environmental Protection Agency Gene-Tox Program. *Mutation Research*. 196, 17–36 (1988).

(9) Li, A.P., Carver, J.H., Choy, W.N., Hsie, A.W., Gupta, R.S., Loveday, K.S., O'Neill, J.P., Riddle, J.C., Stankowski, Jr., L.F., and Yang, L.L. A Guide for the Performance of the Chinese Hamster Ovary Cell/Hypoxanthine-Guanine Phosphoribosyl Transferase Gene Mutation Assay. *Mutation Research*. 189, 135–141 (1987).

(10) Liber, H.L., Yandell, D.W., and Little, J.B. A Comparison of Mutation

Induction at the tk and hprt Loci in Human Lymphoblastoid Cells; Quantitative Differences are Due to an Additional Class of Mutations at the Autosomal TK Locus. *Mutation Research*. 216, 9–17 (1989).

(11) Stankowski, L.F. Jr., Tindall, K.R., and Hsie, A.W. Quantitative and Molecular Analyses of Ethyl Methanesulfonate- and ICR 191-Induced Molecular Analyses of Ethyl Methanesulfonate- and ICR 191-Induced Mutation in AS52 Cells. *Mutation Reseach*. 160, 133–147 (1986).

(12) Turner, N.T., Batson, A.G., and Clive, D. Eds. Kilbey, B.J. et al. Procedures for the L5178Y/TK$^{=}$/$^{-}$ > TK$^{=}$/$^{-}$ Mouse Lymphoma Cell Mutagenicity Assay. *Handbook of Mutagenicity Test Procedures* (Elsevier Science Publishers, New York, 1984) pp. 239–268.

(13) Arlett, C.F., Smith, D.M., Clarke, G.M., Green, M.H.L., Cole, J., McGregor, D.B., and Asquith, J.C. Ed. Kirkland, D.J. Mammalian Cell Gene Mutation Assays Based Upon Colony Formation. *Statistical Evaluation of Mutagenicity Test Data* (Cambridge University Press, 1989) pp. 66–101.

(14) Abbondandolo, A., Bonatti, S., Corti, G., Fiorio, R., Loprieno, N., and Mazzaccaro, A. Induction of 6-Thioguanine-Resistant Mutants in V79 Chinese Hamster Cells by Mouse-Liver Microsome-Activated Dimethylnitrosamine. *Mutation Research*. 46, 365–373 (1977).

(15) Ames, B.N., McCann, J., and Yamasaki, E. Methods for Detecting Carcinogens and Mutagens with the Salmonella/Mammalian-Microsome Mutagenicity Test. *Mutation Reseach*. 31, 347–364 (1975).

(16) Clive, D., Johnson, K.O., Spector, J.F.S., Batson, A.G., and Brown M.M.M. Validation and Characterization of the L5178Y/TK$^{=}$/$^{-}$ Mouse Lymphoma Mutagen Assay System. *Mutation Reseach*. 59, 61–108 (1979).

(17) Maron, D.M. and Ames, B.N. Revised Methods for the Salmonella Mutagenicity Test. *Mutation Reseach*. 113, 173, 215 (1983).

(18) Elliott, B.M., Combes, R.D., Elcombe, C.R., Gatehouse, D.G., Gibson, G.G., Mackay, J.M., and Wolf, R.C. Alternatives to Aroclor 1254-Induced S9 in *In Vitro* Genotoxicity Assays. *Mutagenesis*. 7, 175–177 (1992).

(19) Matsushima, T., Sawamura, M., Hara, K., and Sugimura, T. A Safe Substitute for Polychlorinated Biphenyls as an Inducer of Metabolic Activation Systems. (Eds.) de Serres, F.J., Fouts, J.R., Bend, J.R., and Philpot, R.M. *In Vitro Metabolic Activation in Mutagenesis Testing* (Elsevier, North-Holland, 1976) pp. 85–88.

(20) Krahn, D.F., Barsky, F.C., and McCooey, K.T. Eds. Tice, R.R., Costa, D.L., and Schaich, K.M. CHO/HGPRT Mutation Assay: Evaluation of Gases and Volatile Liquids. *Genotoxic Effects of Airborne Agents* (New York, Plenum, 1982) pp. 91–103.

(21) Zamora, P.O., Benson, J.M., Li, A.P., and Brooks, A.L. Evaluation of an Exposure System Using Cells Grown on Collagen Gels for Detecting Highly Volatile Mutagens in the CHO/HGPRT Mutation Assay. *Environmental Mutagenesis*. 5, 795–801 (1983).

(22) Applegate, M.L., Moore, M.M., Broder, C.B., Burrell, A., and Hozier, J.C. Molecular Dissection of Mutations at the Heterozygous Thymidine Kinase Locus in Mouse Lymphoma Cells. Proc. National Academy Science (USA, 1990) 87, 51–55.

(23) Moore, M.M., Clive, D., Hozier, J.C., Howard, B.E., Batson, A.G., Turner, N.T., and Sawyer, J. Analysis of Trifluorothymidine-Resistant (TFT^{r}) Mutants of L5178Y/TK$^{=}$/$_{-}$ Mouse Lymphoma Cells. *Mutation Research*. 151, 161–174 (1985).

(24) Yandell, D.W., Dryja, T.P., and Little J.B. Molecular Genetic Analysis of Recessive Mutations at a Heterozygous Autosomal Locus in Human Cells. *Mutation Research*. 229, 89–102 (1990).

(25) Moore, M.M. and Doerr, C.L. Comparison of Chromosome Aberration Frequency and Small-Colony TK-Deficient Mutant Frequency in L5178Y/TK$^{=}$/$^{-}$ 3.7.2C Mouse Lymphoma Cells. *Mutagenesis*. 5, 609–614 (1990).

§ 799.9537 TSCA in vitro mammalian chromosome aberration test.

(a) *Scope*—(1) *Applicability*. This section is intended to meet testing requirements under section 4 of the Toxic Substances Control Act (TSCA) (15 U.S.C. 2601).

(2) *Background*. The source material used in developing this TSCA test

guideline is the Office of Prevention, Pesticides, and Toxic Substances (OPPTS) harmonized test guideline 870.5375 (August 1998, final guidelines). The source is available at the address in paragraph (i) of this section.

(b) *Purpose.* (1) The purpose of the *in vitro* chromosome aberration test is to identify agents that cause structural chromosome aberrations in cultured mammalian cells (see paragraphs (i)(1), (i)(2), and (i)(3) of this section). Structural aberrations may be of two types, chromosome or chromatid. With the majority of chemical mutagens, induced aberrations are of the chromatid type, but chromosome-type aberrations also occur. An increase in polyploidy may indicate that a chemical has the potential to induce numerical aberrations. However, this guideline is not designed to measure numerical aberrations and is not routinely used for that purpose. Chromosome mutations and related events are the cause of many human genetic diseases and there is substantial evidence that chromosome mutations and related events causing alterations in oncogenes and tumour-suppressor genes of somatic cells are involved in cancer induction in humans and experimental animals.

(2) The *in vitro* chromosome aberration test may employ cultures of established cell lines, cell strains or primary cell cultures. The cells used are selected on the basis of growth ability in culture, stability of the karyotype, chromosome number, chromosome diversity, and spontaneous frequency of chromosome aberrations.

(c) *Definitions.* The definitions in section 3 of TSCA and in 40 CFR Part 792—Good Laboratory Practice Standards apply to this test guideline. The following definitions also apply to this test guideline.

Chromatid-type aberration is structural chromosome damage expressed as breakage of single chromatids or breakage and reunion between chromatids.

Chromosome-type aberration is structural chromosome damage expressed as breakage, or breakage and reunion, of both chromatids at an identical site.

Endoreduplication is a process in which after an S period of DNA replication, the nucleus does not go into mitosis but starts another S period. The result is chromosomes with 4, 8, 16,...chromatids.

Gap is an achromatic lesion smaller than the width of one chromatid, and with minimum misalignment of the chromatid(s).

Mitotic index is the ratio of cells in metaphase divided by the total number of cells observed in a population of cells; an indication of the degree of proliferation of that population.

Numerical aberration is a change in the number of chromosomes from the normal number characteristic of the cells utilized.

Polyploidy is a multiple of the haploid chromosome number (n) other than the diploid number (i.e., 3n, 4n, and so on).

Structural aberration is a change in chromosome structure detectable by microscopic examination of the metaphase stage of cell division, observed as deletions and fragments, intrachanges, and interchanges.

(d) *Initial considerations.* (1) Tests conducted *in vitro* generally require the use of an exogenous source of metabolic activation. This metabolic activation system cannot mimic entirely the mammalian *in vivo* conditions. Care should be taken to avoid conditions which would lead to positive results which do not reflect intrinsic mutagenicity and may arise from changes in pH, osmolality, or high levels of cytotoxicity (the test techniques described in the references under paragraphs (i)(4) and (i)(5) of this section may be used).

(2) This test is used to screen for possible mammalian mutagens and carcinogens. Many compounds that are positive in this test are mammalian carcinogens; however, there is not a perfect correlation between this test and carcinogenicity. Correlation is dependent on chemical class and there is increasing evidence that there are carcinogens that are not detected by this test because they appear to act through mechanisms other than direct DNA damage.

(e) *Principle of the test method.* Cell cultures are exposed to the test substance both with and without metabolic activation. At predetermined intervals after exposure of cell cultures

to the test substance, they are treated with a metaphase-arresting substance (e.g., Colcemid® or colchicine), harvested, stained, and metaphase cells are analysed microscopically for the presence of chromosome aberrations.

(f) *Description of the method*—(1) *Preparations*—(i) *Cells.* A variety of cell lines, strains, or primary cell cultures, including human cells, may be used (e.g., Chinese hamster fibroblasts, human, or other mammalian peripheral blood lymphocytes).

(ii) *Media and culture conditions.* Appropriate culture media, and incubation conditions (culture vessels, CO^2 concentration, temperature and humidity) must be used in maintaining cultures. Established cell lines and strains must be checked routinely for stability in the modal chromosome number and the absence of *Mycoplasma* contamination and should not be used if contaminated. The normal cell-cycle time for the cells and culture conditions used should be known.

(iii) *Preparation of cultures*—(A) *Established cell lines and strains.* Cells are propagated from stock cultures, seeded in culture medium at a density such that the cultures will not reach confluency before the time of harvest, and incubated at 37 °C.

(B) *Lymphocytes.* Whole blood treated with an anti-coagulant (e.g., heparin) or separated lymphocytes obtained from healthy subjects are added to culture medium containing a mitogen (e.g., phytohemagglutinin) and incubated at 37 °C.

(iv) *Metabolic activation.* Cells must be exposed to the test substance both in the presence and absence of an appropriate metabolic activation system. The most commonly used system is a co-factor-supplemented post-mitochondrial fraction (S9) prepared from the livers of rodents treated with enzyme-inducing agents such as Aroclor 1254 (the test techniques described in the references under paragraphs (i)(6), (i)(7), (8)(i), and (i)(9) of this section may be used), or a mixture of phenobarbitone and β-naphthoflavone (the test techniques described in the references under paragraphs (i)(10), (i)(11), and (i)(12) of this section may be used). The post-mitochondrial fraction is usually used at concentrations in the range from 1-10% v/v in the final test medium. The condition of a metabolic activation system may depend upon the class of chemical being tested. In some cases, it may be appropriate to utilize more than one concentration of post-mitochondrial fraction. A number of developments, including the construction of genetically engineered cell lines expressing specific activating enzymes, may provide the potential for endogenous activation. The choice of the cell lines used should be scientifically justified (e.g., by the relevance of the cytochrome P450 isoenzyme for the metabolism of the test substance).

(v) *Test substance/preparation.* Solid test substances should be dissolved or suspended in appropriate solvents or vehicles and diluted, if appropriate, prior to treatment of the cells. Liquid test substances may be added directly to the test systems and/or diluted prior to treatment. Fresh preparations of the test substance should be employed unless stability data demonstrate the acceptability of storage.

(2) *Test conditions*—(i) *Solvent/vehicle.* The solvent/vehicle should not be suspected of chemical reaction with the test substance and must be compatible with the survival of the cells and the S9 activity. If other than well-known solvent/vehicles are used, their inclusion should be supported by data indicating their compatibility. It is recommended that wherever possible, the use of an aqueous solvent/vehicle be considered first. When testing water-unstable substances, the organic solvents used should be free of water. Water can be removed by adding a molecular sieve.

(ii) *Exposure concentrations.* (A) Among the criteria to be considered when determining the highest concentration are cytotoxicity, solubility in the test system, and changes in pH or osmolality.

(B) Cytotoxicity should be determined with and without metabolic activation in the main experiment using an appropriate indication of cell integrity and growth, such as degree of confluency, viable cell counts, or mitotic index. It may be useful to determine cytotoxicity and solubility in a preliminary experiment.

(C) At least three analyzable concentrations should be used. Where cytotoxicity occurs, these concentrations should cover a range from the maximum to little or no toxicity; this will usually mean that the concentrations should be separated by no more than a factor between 2 and √10. At the time of harvesting, the highest concentration should show a significant reduction in degree of confluency, cell count or mitotic index, (all greater than 50%). The mitotic index is only an indirect measure of cytotoxic/cytostatic effects and depends on the time after treatment. However, the mitotic index is acceptable for suspension cultures in which other toxicity measurements may be cumbersome and impractical. Information on cell-cycle kinetics, such as average generation time (AGT), could be used as supplementary information. AGT, however, is an overall average that does not always reveal the existence of delayed subpopulations, and even slight increases in average generation time can be associated with very substantial delay in the time of optimal yield of aberrations. For relatively non-cytotoxic compounds the maximum concentration should be 5 µg/ml, 5mg/ml, or 0.01M, whichever is the lowest.

(D) For relatively insoluble substances that are not toxic at concentrations lower than the insoluble concentration, the highest dose used should be a concentration above the limit of solubility in the final culture medium at the end of the treatment period. In some cases (e.g., when toxicity occurs only at higher than the lowest insoluble concentration) it is advisable to test at more than one concentration with visible precipitation. It may be useful to assess solubility at the beginning and the end of the treatment, as solubility can change during the course of exposure in the test system due to presence of cells, S9, serum etc. Insolubility can be detected by using the unaided eye. The precipitate should not interfere with the scoring.

(iii) *Controls.* (A) Concurrent positive and negative (solvent or vehicle) controls both with and without metabolic activation must be included in each experiment. When metabolic activation is used, the positive control chemical must be the one that requires activation to give a mutagenic response.

(B) Positive controls must employ a known clastogen at exposure levels expected to give a reproducible and detectable increase over background which demonstrates the sensitivity of the test system. Positive control concentrations should be chosen so that the effects are clear but do not immediately reveal the identity of the coded slides to the reader. Examples of positive-control substances include:

Metabolic activation condition	Chemical	CAS number
Absence of exogenous metabolic activation.	Methyl methanesulfonate.	[66–27–3]
	Ethyl methanesulfonate	[62–50–0]
	Ethylnitrosourea	[759–73–9]
	Mitomycin C	[50–07–7]
	4-Nitroquinoline-N-Oxide.	[56–57–5]
Presence of exogenous metabolic activation.	Benzo(a)pyrene	[50–32–8]
	Cyclophosphamide ..... (monohydrate)	[50–18–0] ([6055–19–2])

(C) Other appropriate positive control substances may be used. The use of chemical class-related positive-control chemicals may be considered, when available.

(D) Negative controls, consisting of solvent or vehicle alone in the treatment medium, and treated in the same way as the treatment cultures, must be included for every harvest time. In addition, untreated controls should also be used unless there are historical-control data demonstrating that no deleterious or mutagenic effects are induced by the chosen solvent.

(g) *Procedure*—(1) *Treatment with test substance.* (i) Proliferating cells are treated with the test substance in the presence and absence of a metabolic-activation system. Treatment of lymphocytes should commence at about 48 hours after mitogenic stimulation.

(ii) Duplicate cultures must be used at each concentration, and are strongly recommended for negative/solvent control cultures. Where minimal variation between duplicate cultures can be demonstrated (the test techniques described in the references under paragraphs (i)(13) and (i)(14) of this section

may be used), from historical data, it may be acceptable for single cultures to be used at each concentration.

(iii) Gaseous or volatile substances should be tested by appropriate methods, such as in sealed culture vessels (the test techniques described in the references under paragraphs (i)(15) and (i)(16) of this section may be used).

(2) *Culture harvest time.* In the first experiment, cells should be exposed to the test substance both with and without metabolic activation for 3–6 hours, and sampled at a time equivalent to about 1.5 normal cell-cycle length after the beginning of treatment (the test techniques described in the references under paragraph (i)(12) of this section may be used). If this protocol gives negative results both with and without activation, an additional experiment without activation should be done, with continuous treatment until sampling at a time equivalent to about 1.5 normal cell-cycle lengths. Certain chemicals may be more readily detected by treatment/sampling times longer than 1.5 cycle lengths. Negative results with metabolic activation need to be confirmed on a case-by-case basis. In those cases where confirmation of negative results is not considered necessary, justification should be provided.

(3) *Chromosome preparation.* Cell cultures must be treated with Colcemid® or colchicine usually for 1 to 3 hours prior to harvesting. Each cell culture must be harvested and processed separately for the preparation of chromosomes. Chromosome preparation involves hypotonic treatment of the cells, fixation and staining.

(4) *Analysis.* (i) All slides, including those of positive and negative controls, must be independently coded before microscopic analysis. Since fixation procedures often result in the breakage of a proportion of metaphase cells with loss of chromosomes, the cells scored must therefore contain a number of centromeres equal to the modal number ±2 for all cell types. At least 200 well-spread metaphases should be scored per concentration and control equally divided amongst the duplicates, if applicable. This number can be reduced when high numbers of aberrations are observed.

(ii) Though the purpose of the test is to detect structural chromosome aberrations, it is important to record polyploidy and endoreduplication when these events are seen.

(h) *Data and reporting*—(1) *Treatment of results.* (i) The experimental unit is the cell, and therefore the percentage of cells with structural chromosome aberration(s) should be evaluated. Different types of structural chromosome aberrations must be listed with their numbers and frequencies for experimental and control cultures. Gaps are recorded separately and reported but generally not included in the total aberration frequency.

(ii) Concurrent measures of cytotoxicity for all treated and negative control cultures in the main aberration experiment(s) should also be recorded.

(iii) Individual culture data should be provided. Additionally, all data should be summarized in tabular form.

(iv) There is no requirement for verification of a clear positive response. Equivocal results should be clarified by further testing preferably using modification of experimental conditions. The need to confirm negative results has been discussed in paragraph (g)(2) of this section. Modification of study parameters to extend the range of conditions assessed should be considered in follow-up experiments. Study parameters that might be modified include the concentration spacing and the metabolic activation conditions.

(2) *Evaluation and interpretation of results.* (i) There are several criteria for determining a positive result, such as a concentration-related increase or a reproducible increase in the number of cells with chromosome aberrations. Biological relevance of the results should be considered first. Statistical methods may be used as an aid in evaluating the test results (see paragraphs (i)(3) and (i)(13) of this section). Statistical significance should not be the only determining factor for a positive response.

(ii) An increase in the number of polyploid cells may indicate that the test substance has the potential to inhibit mitotic processes and to induce numerical chromosome aberrations. An increase in the number of cells with

endoreduplicated chromosomes may indicate that the test substance has the potential to inhibit cell-cycle progression (the test techniques described in the references under paragraphs (i)(17) and (i)(18) of this section may be used).

(iii) A test substance for which the results do not meet the criteria in paragraphs (h)(2)(i) and (h)(2)(ii) of this section is considered nonmutagenic in this system.

(iv) Although most experiments will give clearly positive or negative results, in rare cases the data set will preclude making a definite judgement about the activity of the test substance. Results may remain equivocal or questionable regardless of the number of times the experiment is repeated.

(v) Positive results from the *in vitro* chromosome aberration test indicate that the test substance induces structural chromosome aberrations in cultured mammalian somatic cells. Negative results indicate that, under the test conditions, the test substance does not induce chromosome aberrations in cultured mammalian somatic cells.

(3) *Test report.* The test report must include the following information.

(i) Test substance.

(A) Identification data and CAS no., if known.

(B) Physical nature and purity.

(C) Physicochemical properties relevant to the conduct of the study.

(D) Stability of the test substance, if known.

(ii) Solvent/vehicle.

(A) Justification for choice of solvent/vehicle.

(B) Solubility and stability of the test substance in solvent/vehicle, if known.

(iii) Cells.

(A) Type and source of cells.

(B) Karyotype features and suitability of the cell type used.

(C) Absence of *Mycoplasma,* if applicable.

(D) Information on cell-cycle length.

(E) Sex of blood donors, whole blood or separated lymphocytes, mitogen used.

(F) Number of passages, if applicable.

(G) Methods for maintenance of cell cultures if applicable.

(H) Modal number of chromosomes.

(iv) Test conditions.

(A) Identity of metaphase arresting substance, its concentration and duration of cell exposure.

(B) Rationale for selection of concentrations and number of cultures including, e.g., cytotoxicity data and solubility limitations, if available.

(C) Composition of media, CO^2 concentration if applicable.

(D) Concentration of test substance.

(E) Volume of vehicle and test substance added.

(F) Incubation temperature.

(G) Incubation time.

(H) Duration of treatment.

(I) Cell density at seeding, if appropriate.

(J) Type and composition of metabolic activation system, including acceptability criteria.

(K) Positive and negative controls.

(L) Methods of slide preparation.

(M) Criteria for scoring aberrations.

(N) Number of metaphases analyzed.

(O) Methods for the measurements of toxicity.

(P) Criteria for considering studies as positive, negative or equivocal.

(v) Results.

(A) Signs of toxicity, e.g., degree of confluency, cell-cycle data, cell counts, mitotic index.

(B) Signs of precipitation.

(C) Data on pH and osmolality of the treatment medium, if determined.

(D) Definition for aberrations, including gaps.

(E) Number of cells with chromosome aberrations and type of chromosome aberrations given separately for each treated and control culture.

(F) Changes in ploidy if seen.

(G) Dose-response relationship, where possible.

(H) Statistical analyses, if any.

(I) Concurrent negative (solvent/vehicle) and positive control data.

(J) Historical negative (solvent/vehicle) and positive control data, with ranges, means and standard deviations.

(vi) Discussion of the results.

(vii) Conclusion.

(i) *References.* For additional background information on this test guideline, the following references should be consulte. These references are available for inspection at the TSCA Nonconfidential Information Center, Rm.

NE-B607, Environmental Protection Agency, 401 M St., SW., Washington, DC, 12 noon to 4 p.m., Monday through Friday, except legal holidays.

(1) Evans, H.J. Cytological Methods for Detecting Chemical Mutagens. Chemical Mutagens, Principles and Methods for their Detection, Vol. 4, Hollaender, A. Ed. Plenum Press, New York and London, pp. 1-29 (1976).

(2) Ishidate, M. Jr. and Sofuni, T. The *In Vitro* Chromosomal Aberration Test Using Chinese Hamster Lung (CHL) Fibroblast Cells in Culture. Progress in Mutation Research, Vol. 5, Ashby, J. et al., Eds. Elsevier Science Publishers, Amsterdam-New York-Oxford, pp. 427–432 (1985).

(3) Galloway, S.M. et al. Chromosome aberration and sister chromatid exchanges in Chinese hamster ovary cells: Evaluation of 108 chemicals. *Environmental and Molecular Mutagenesis* 10 (suppl. 10), 1–175 (1987).

(4) Scott, D. et al. Genotoxicity under Extreme Culture Conditions. A report from ICPEMC Task Group 9. *Mutation Research* 257, 147–204 (1991).

(5) Morita, T. et al. Clastogenicity of Low pH toVarious Cultured Mammalian Cells. *Mutation Research* 268, 297-305 (1992).

(6) Ames, B.N., McCann, J. and Yamasaki, E. Methods for Detecting Carcinogens and Mutagens with the Salmonella/Mammalian Microsome Mutagenicity Test. *Mutation Research* 31, 347–364 (1975).

(7) Maron, D.M. and Ames, B.N. Revised Methods for the Salmonella Mutagenicity Test. *Mutation Research* 113, 173-215 (1983).

(8) Natarajan, A.T. et al. Cytogenetic Effects of Mutagens/Carcinogens after Activation in a Microsomal System In Vitro, I. Induction of Chromosome Aberrations and Sister Chromatid Exchanges by Diethylnitrosamine (DEN) and Dimethylnitrosamine (DMN) in CHO Cells in the Presence of Rat-Liver Microsomes. *Mutation Research* 37, 83–90 (1976).

(9) Matsuoka, A., Hayashi, M. and Ishidate, M., Jr. Chromosomal Aberration Tests on 29 Chemicals Combined with S9 Mix In Vitro. *Mutation Research* 66, 277–290 (1979).

(10) Elliot, B.M. et al. Report of UK Environmental Mutagen Society Working Party. Alternatives to Aroclor 1254-induced S9 in In Vitro Genotoxicity Assays. *Mutagenesis* 7, 175–177 (1992).

(11) Matsushima, T. et al. A Safe Substitute for Polychlorinated Biphenyls as an Inducer of Metabolic Activation Systems. de Serres, F.J., Fouts, J.R., Bend, J.R. and Philpot, R.M. Eds. In Vitro Metabolic Activation in Mutagenesis Testing, Elsevier, North-Holland, pp. 85–88 (1976).

(12) Galloway, S.M. et al. Report from Working Group on In Vitro Tests for Chromosomal Aberrations. *Mutation Research* 312, 241–261 (1994).

(13) Richardson, C. et al. Analysis of Data from In Vitro Cytogenetic Assays. Statistical Evaluation of Mutagenicity Test Data. Kirkland, D.J., Ed. Cambridge University Press, Cambridge, pp. 141–154 (1989).

(14) Soper, K.A. and Galloway S.M. Replicate Flasks are not Necessary for In Vitro Chromosome Aberration Assays in CHO Cells. *Mutation Research* 312, 139–149 (1994).

(15) Krahn, D.F., Barsky, F.C. and McCooey, K.T. CHO/HGPRT Mutation Assay: Evaluation of Gases and Volatile Liquids. Tice, R.R., Costa, D.L., Schaich, K.M. Eds. Genotoxic Effects of Airborne Agents. New York, Plenum, pp. 91–103 (1982).

(16) Zamora, P.O. et al. Evaluation of an Exposure System Using Cells Grown on Collagen Gels for Detecting Highly Volatile Mutagens in the CHO/HGPRT Mutation Assay. *Environmental Mutagenesis* 5, 795–801 (1983).

(17) Locke-Huhle, C. Endoreduplication in Chinese hamster cells during alpha-radiation induced G2 arrest. *Mutation Research* 119, 403-413 (1983).

(18) Huang, Y., Change, C. and Trosko, J.E. Aphidicolin—induced endoreduplication in Chinese hamster cells. *Cancer Research* 43, 1362–1364 (1983).

[65 FR 78807, Dec. 15, 2000]

§ 799.9538 TSCA mammalian bone marrow chromosomal aberration test.

(a) *Scope.* This section is intended to meet the testing requirements under section 4 of TSCA. The mammalian bone marrow chromosomal aberration test is used for the detection of structural chromosome aberrations induced

by test compounds in bone marrow cells of animals, usually rodents. Structural chromosome aberrations may be of two types, chromosome or chromatid. An increase in polyploidy may indicate that a chemical has the potential to induce numerical aberrations. With the majority of chemical mutagens, induced aberrations are of the chromatid-type, but chromosome-type aberrations also occur. Chromosome mutations and related events are the cause of many human genetic diseases and there is substantial evidence that chromosome mutations and related events causing alterations in oncogenes and tumor suppressor genes are involved in cancer in humans and experimental systems.

(b) *Source.* The source material used in developing this TSCA test guideline is the OECD guideline 475 (February 1997). This source is available at the address in paragraph (g) of this section.

(c) *Definitions.* The following definitions apply to this section:

Chromatid-type aberration is structural chromosome damage expressed as breakage of single chromatids or breakage and reunion between chromatids.

Chromosome-type aberration is structural chromosome damage expressed as breakage, or breakage and reunion, of both chromatids at an identical site.

Endoreduplication is a process in which after an S period of DNA replication, the nucleus does not go into mitosis but starts another S period. The result is chromosomes with 2,4,8,...chromatids.

Gap is an achromatic lesion smaller than the width of one chromatid, and with minimum misalignment of the chromatids.

Numerical aberration is a change in the number of chromosomes from the normal number characteristic of the animals utilized.

Polyploidy is a multiple of the haploid chromosome number (n) other than the diploid number (i.e., 3n, 4n and so on).

Structural aberration is a change in chromosome structure detectable by microscopic examination of the metaphase stage of cell division, observed as deletions and fragments, intrachanges or interchanges.

(d) *Initial considerations.* (1) Rodents are routinely used in this test. Bone marrow is the target tissue in this test, since it is a highly vascularised tissue, and it contains a population of rapidly cycling cells that can be readily isolated and processed. Other species and target tissues are not the subject of this section.

(2) This chromosome aberration test is especially relevant to assessing mutagenic hazard in that it allows consideration of factors of *in vivo* metabolism, pharmacokinetics and DNA-repair processes although these may vary among species and among tissues. An *in vivo* test is also useful for further investigation of a mutagenic effect detected by an *in vitro* test.

(3) If there is evidence that the test substance, or a reactive metabolite, will not reach the target tissue, it is not appropriate to use this test.

(e) *Test method*—(1) *Principle.* Animals are exposed to the test substance by an appropriate route of exposure and are sacrificed at appropriate times after treatment. Prior to sacrifice, animals are treated with a metaphase-arresting agent (e.g., colchicine or Colcemid®). Chromosome preparations are then made from the bone marrow cells and stained, and metaphase cells are analyzed for chromosome aberrations.

(2) *Description*—(i) *Preparations*—(A) *Selection of animal species.* Rats, mice and Chinese hamsters are commonly used, although any appropriate mammalian species may be used. Commonly used laboratory strains of young healthy adult animals should be employed. At the commencement of the study, the weight variation of animals should be minimal and not exceed ±20% of the mean weight of each sex.

(B) *Housing and feeding conditions.* The temperature in the experimental animal room should be 22 °C ±3 °C). Although the relative humidity should be at least 30% and preferably not exceed 70% other than during room cleaning, the aim should be 50–60%. Lighting should be artificial, the sequence being 12 hrs light, 12 hrs dark. For feeding, conventional laboratory diets may be used with an unlimited supply of drinking water. The choice of diet may be influenced by the need to ensure a suitable admixture of a test substance

when administered by this method. Animals may be housed individually, or be caged in small groups of the same sex.

(C) *Preparation of the animals.* Healthy young adult animals shall be randomly assigned to the control and treatment groups. Cages should be arranged in such a way that possible effects due to cage placement are minimized. The animals are identified uniquely. The animals are acclimated to the laboratory conditions for at least 5 days.

(D) *Preparation of doses.* Solid test substances shall be dissolved or suspended in appropriate solvents or vehicles and diluted, as appropriate, prior to dosing of the animals. Liquid test substances may be dosed directly or diluted prior to dosing. Fresh preparations of the test substance should be employed unless stability data demonstrate the acceptability of storage.

(ii) *Test conditions*—(A) *Solvent/vehicle.* The solvent/vehicle shall not produce toxic effects at the dose levels used, and shall not be suspected of chemical reaction with the test substance. If other than well-known solvents/vehicles are used, their inclusion should be supported with data indicating their compatibility. It is recommended that wherever possible, the use of an aqueous solvent/vehicle should be considered first.

(B) *Controls.* (*1*) Concurrent positive and negative (solvent/vehicle) controls shall be included for each sex in each test. Except for treatment with the test substance, animals in the control groups should be handled in an identical manner to the animals in the treated groups.

(*2*) Positive controls shall produce structural chromosome aberrations *in vivo* at exposure levels expected to give a detectable increase over background. Positive control doses should be chosen so that the effects are clear but do not immediately reveal the identity of the coded slides to the reader. It is acceptable that the positive control be administered by a route different from the test substance and sampled at only a single time. The use of chemical class related positive control chemicals may be considered, when available. Examples of positive control substances include:

Chemical	CAS No.
Triethylenemelamine	[CAS no. 51–18–3]
Ethyl methanesulphonate	[CAS no. 62–50–0]
Ethyl nitrosourea	[CAS no. 759–73–9]
Mitomycin C	[CAS no. 50–07–7]
Cyclophosphamide (monohydrate)	[CAS no. 50–18–0]
	[CAS no. 6055–19–2]

(*3*) Negative controls, treated with solvent or vehicle alone, and otherwise treated in the same way as the treatment groups, shall be included for every sampling time, unless acceptable inter-animal variability and frequencies of cells with chromosome aberrations are available from historical control data. If single sampling is applied for negative controls, the most appropriate time is the first sampling time. In the absence of historical or published control data demonstrating that no deleterious or mutagenic effects are induced by the chosen solvent/vehicle, untreated animals should be used.

(3) *Procedure*—(i) *Number and sex of animals.* Each treated and control group shall include at least 5 analyzable animals per sex. If at the time of the study there are data available from studies in the same species and using the same route of exposure that demonstrate that there are no substantial differences in toxicity between sexes, then testing in a single sex will be sufficient. Where human exposure to chemicals may be sex-specific, as for example with some pharmaceutical agents, the test should be performed with animals of the appropriate sex.

(ii) *Treatment schedule.* (A) Test substances are preferably administered as a single treatment. Test substances may also be administered as a split dose, i.e. two treatments on the same day separated by no more than a few hrs, to facilitate administering a large volume of material. Other dose regimens should be scientifically justified.

(B) Samples shall be taken at two separate times following treatment on one day. For rodents, the first sampling interval is 1.5 normal cell cycle length (the latter being normally 12–18 hr) following treatment. Since the time required for uptake and metabolism of the test substance as well as its

effect on cell cycle kinetics can affect the optimum time for chromosome aberration detection, a later sample collection 24 hr after the first sample time is recommended. If dose regimens of more than one day are used, one sampling time at 1.5 normal cell cycle lengths after the final treatment should be used.

(C) Prior to sacrifice, animals shall be injected intraperitoneally with an appropriate dose of a metaphase arresting agent (e.g. Colcemid® or colchicine). Animals are sampled at an appropriate interval thereafter. For mice this interval is approximately 3–5 hrs; for Chinese hamsters this interval is approximately 4–5 hrs. Cells shall be harvested from the bone marrow and analyzed from chromosome aberrations.

(iii) *Dose levels.* If a range finding study is performed because there are no suitable data available, it shall be performed in the same laboratory, using the same species, strain, sex, and treatment regimen to be used in the main study (an approach to dose selection is presented in the reference under paragraph (g)(5) of this section). If there is toxicity, three dose levels shall be used for the first sampling time. These dose levels shall cover a range from the maximum to little or no toxicity. At the later sampling time only the highest dose needs to be used. The highest dose is defined as the dose producing signs of toxicity such that higher dose levels, based on the same dosing regimen, would be expected to produce lethality. Substances with specific biological activities at low nontoxic doses (such as hormones and mitogens) may be exceptions to the dose-setting criteria and should be evaluated on a case-by-case basis. The highest dose may also be defined as a dose that produces some indication of toxicity in the bone marrow (e.g. greater than 50% reduction in mitotic index).

(iv) *Limit test.* If a test at one dose level of at least 2,000 mg/kg body weight using a single treatment, or as two treatments on the same day, produces no observable toxic effects, and if genotoxicity would not be expected based on data from structurally related compounds, then a full study using three dose levels may not be considered necessary. For studies of a longer duration, the limit dose is 2,000 mg/kg/body weight/day for treatment up to 14 days, and 1,000 mg/kg/body weight/day for treatment longer than 14 days. Expected human exposure may indicate the need for a higher dose level to be used in the limit test.

(v) *Administration of doses.* The test substance is usually administered by gavage using a stomach tube or a suitable intubation cannula, or by intraperitoneal injection. Other routes of exposure may be acceptable where they can be justified. The maximum volume of liquid that can be administered by gavage or injection at one time depends on the size of the test animal. The volume should not exceed 2 ml/100g body weight. The use of volumes higher than these must be justified. Except for irritating or corrosive substances which will normally reveal exacerbated effects with higher concentrations, variability in test volume should be minimized by adjusting the concentration to ensure a constant volume at all dose levels.

(vi) *Chromosome preparation.* Immediately after sacrifice, bone marrow shall be obtained, exposed to hypotonic solution and fixed. The cells shall be then spread on slides and stained.

(vii) *Analysis.* (A) The mitotic index should be determined as a measure of cytotoxicity in at least 1,000 cells per animal for all treated animals (including positive controls) and untreated negative control animals.

(B) At least 100 cells should be analyzed for each animal. This number could be reduced when high numbers of aberrations are observed. All slides, including those of positive and negative controls, shall be independently coded before microscopic analysis. Since slide preparation procedures often result in the breakage of a proportion of metaphases with loss of chromosomes, the cells scored should therefore contain a number of centromeres equal to the number 2n ±2.

(f) *Data and reporting*—(1) *Treatment of results.* Individual animal data shall be presented in tabular form. The experimental unit is the animal. For each animal the number of cells scored, the number of aberrations per cell and the

percentage of cells with structural chromosome aberration(s) shall be evaluated. Different types of structural chromosome aberrations shall be listed with their numbers and frequencies for treated and control groups. Gaps shall be recorded separately and reported but generally not included in the total aberration frequency. If there is no evidence for a difference in response between the sexes, the data may be combined for statistical analysis.

(2) *Evaluation and interpretation of results.* (i) There are several criteria for determining a positive result, such as a dose-related increase in the relative number of cells with chromosome aberrations or a clear increase in the number of cells with aberrations in a single dose group at a single sampling time. Biological relevance of the results should be considered first. Statistical methods may be used as an aid in evaluating the test results (some statistical methods are described in the reference under paragraph (g)(6) of this section). Statistical significance should not be the only determining factor for a positive response. Equivocal results should be clarified by further testing preferably using a modification of experimental conditions.

(ii) An increase in polyploidy may indicate that the test substance has the potential to induce numerical chromosome aberrations. An increase in endoreduplication may indicate that the test substance has the potential to inhibit cell cycle progression. This phenomenon is described in the references under paragraphs (g)(7) and (g)(8) of this section.

(iii) A test substance for which the results do not meet the criteria described in paragraph (f)(2)(i) of this section is considered non-mutagenic in this test.

(iv) Although most experiments will give clearly positive or negative results, in rare cases the data set will preclude making a definite judgment about the activity of the test substance. Results may remain equivocal or questionable regardless of the number of experiments performed.

(v) Positive results from the *in vivo* chromosome aberration test indicate that a substance induces chromosome aberrations in the bone marrow of the species tested. Negative results indicate that, under the test conditions, the test substance does not induce chromosome aberrations in the bone marrow of the species tested.

(vi) The likelihood that the test substance or its metabolites reach the general circulation or specifically the target tissue (e.g., systemic toxicity) should be discussed.

(3) *Test report.* The test report shall include the following information:

(i) Test substance:

(A) Identification data and CAS No., if known.

(B) Physical nature and purity.

(C) Physicochemical properties relevant to the conduct of the study.

(D) Stability of the test substance, if known.

(ii) Solvent/vehicle:

(A) Justification for choice of vehicle.

(B) Solubility and stability of the test substance in solvent/vehicle, if known.

(iii) Test animals:

(A) Species/strain used.

(B) Number, age and sex of animals.

(C) Source, housing conditions, diet, etc.

(D) Individual weight of the animals at the start of the test, including body weight range, mean and standard deviation for each group.

(iv) Test conditions:

(A) Positive and negative (vehicle/solvent) controls.

(B) Data from range-finding study, if conducted.

(C) Rationale for dose level selection.

(D) Details of test substance preparation.

(E) Details of the administration of the test substance.

(F) Rationale for route of administration.

(G) Methods for verifying that the test substance reached the general circulation or target tissue, if applicable.

(H) Conversion from diet/drinking water test substance concentration parts per million (ppm) to the actual dose (mg/kg body weight/day), if applicable.

(I) Details of food and water quality.

(J) Detailed description of treatment and sampling schedules.

(K) Methods for measurement of toxicity.

(L) Identity of metaphase arresting substance, its concentration and duration of treatment.

(M) Methods of slide preparation.

(N) Criteria for scoring aberrations.

(O) Number of cells analyzed per animal.

(P) Criteria for considering studies as positive, negative or equivocal.

(v) Results:

(A) Signs of toxicity.

(B) Mitotic index.

(C) Type and number of aberrations, given separately for each animal.

(D) Total number of aberrations per group with means and standard deviations.

(E) Number of cells with aberrations per group with means and standard deviations.

(F) Changes in ploidy, if seen.

(G) Dose-response relationship, where possible.

(H) Statistical analyses, if any.

(I) Concurrent negative control data.

(J) Historical negative control data with ranges, means and standard deviations.

(K) Concurrent positive control data.

(vi) Discussion of the results.

(vii) Conclusion.

(g) *References.* For additional background information on this test guideline, the following references should be consulted. These references are available for inspection at the TSCA Nonconfidential Information Center, Rm. NE-B607, Environmental Protection Agency, 401 M St., SW., Washington, DC, 12 noon to 4 p.m., Monday through Friday, except legal holidays.

(1) Adler, I.D. Eds. S. Venitt and J.M. Parry. Cytogenetic Tests in Mammals. *Mutagenicity Testing: A Practical Approach*. (IRL Press, Oxford, Washington DC, 1984) pp. 275–306.

(2) Preston, R.J., Dean, B.J., Galloway, S., Holden, H., McFee, A.F., and Shelby, M. Mammalian *In Vivo* Cytogenetic Assays: Analysis of Chromosome Aberrations in Bone Marrow Cells. *Mutation Research*. 189, 157–165 (1987).

(3) Richold, M., Chandley, A., Ashby, J., Gatehouse, D.G., Bootman, J., and Henderson, L. Ed. D.J. Kirkland. *In Vivo* Cytogenetic Assays. *Basic Mutagenicity Tests, UKEMS Recommended Procedures.* UKEMS Subcommittee on Guidelines for Mutagenicity Testing. Report. Part I revised. (Cambridge University Press, Cambridge, NY, Port Chester, Melbourne, Sydney, 1990) pp. 115–141.

(4) Tice, R.R., Hayashi, M., MacGregor, J.T., Anderson, D., Blakey, D.H., Holden, H.E., Kirsch-Volders, M., Oleson Jr., F.B., Pacchierotti, F., Preston, R.J., Romagna, F., Shimada, H., Sutou, S., and Vannier, B. Report from the Working Group on the *In Vivo* Mammalian Bone Marrow Chromosomal Aberration Test. *Mutation Research*. 312, 305–312 (1994).

(5) Fielder, R.J., Allen, J.A., Boobis, A.R., Botham, P.A., Doe, J., Esdaile, D.J., Gatehouse, D.G., Hodson-Walker, G., Morton, D.B., Kirkland, D. J., and Richold, M. Report of British Toxicology Society/UK Environmental Mutagen Society Working Group: Dose Setting in *In Vivo* Mutagenicity Assays. *Mutagenesis.* 7, 313–319 (1992).

(6) Lovell, D.P., Anderson, D., Albanese, R., Amphlett, G.E., Clare, G., Ferguson, R., Richold, M., Papworth, D.G., and Savage, J.R.K. Ed. Kirkland,D. J. Statistical Analysis of *In Vivo* Cytogenetic Assays. UKEMS Sub-Committee on Guidelines for Mutagenicity Testing. Report Part III. Statistical Evaluation of Mutagenicity Test Data (Cambridge University Press, Cambridge, 1989) pp. 184–232.

(7) Locke-Huhle, C. Endoreduplication in Chinese Hamster Cells During Alpha-Radiation Induced G2 Arrest. *Mutation Research*. 119, 403–413 (1983).

(8) Huang, Y., Change, C., and Trosko, J. E. Aphidicolin-Induced Endoreduplication in Chinese Hamster Cells. *Cancer Research*. 43, 1362–1364 (1983).

[62 FR 43824, Aug. 15, 1997, as amended at 64 FR 35079, June 30, 1999]

§ 799.9539 TSCA mammalian erythrocyte micronucleus test.

(a) *Scope.* This section is intended to meet the testing requirements under section 4 of TSCA.

(1) The mammalian erythrocyte micronucleus test is used for the detection of damage induced by the test substance to the chromosomes or the mitotic apparatus of erythroblasts by analysis of erythrocytes as sampled in bone marrow and/or peripheral blood cells of animals, usually rodents.

(2) The purpose of the micronucleus test is to identify substances that cause cytogenetic damage which results in the formation of micronuclei containing lagging chromosome fragments or whole chromosomes.

(3) When a bone marrow erythroblast develops into a polychromatic erythrocyte, the main nucleus is extruded; any micronucleus that has been formed may remain behind in the otherwise anucleated cytoplasm. Visualization of micronuclei is facilitated in these cells because they lack a main nucleus. An increase in the frequency of micronucleated polychromatic erythrocytes in treated animals is an indication of induced chromosome damage.

(b) *Source.* The source material used in developing this TSCA test guideline is the OECD guideline 474 (February 1997). This source is available at the address in paragraph (g) of this section.

(c) *Definitions.* The following definitions apply to this section:

Centromere (kinetochore) is a region of a chromosome with which spindle fibers are associated during cell division, allowing orderly movement of daughter chromosomes to the poles of the daughter cells.

Micronuclei are small nuclei, separate from and additional to the main nuclei of cells, produced during telophase of mitosis (meiosis) by lagging chromosome fragments or whole chromosomes.

Normochromatic erythrocyte is a mature erythrocyte that lacks ribosomes and can be distinguished from immature, polychromatic erythrocytes by stains selective for ribosomes.

Polychromatic erythrocyte is an immature erythrocyte, in an intermediate stage of development, that still contains ribosomes and therefore can be distinguished from mature, normochromatic erythrocytes by stains selective for ribosomes.

(d) *Initial considerations.* (1) The bone marrow of rodents is routinely used in this test since polychromatic erythrocytes are produced in that tissue. The measurement of micronucleated immature (polychromatic) erythrocytes in peripheral blood is equally acceptable in any species in which the inability of the spleen to remove micronucleated erythrocytes has been demonstrated, or which has shown an adequate sensitivity to detect agents that cause structural or numerical chromosome aberrations. Micronuclei can be distinguished by a number of criteria. These include identification of the presence or absence of a kinetochore or centromeric DNA in the micronuclei. The frequency of micronucleated immature (polychromatic) erythrocytes is the principal endpoint. The number of mature (normochromatic) erythrocytes in the peripheral blood that contain micronuclei among a given number of mature erythrocytes can also be used as the endpoint of the assay when animals are treated continuously for 4 weeks or more. This mammalian *in vivo* micronucleus test is especially relevant to assessing mutagenic hazard in that it allows consideration of factors of *in vivo* metabolism, pharmacokinetics and DNA-repair processes although these may vary among species, among tissues and among genetic endpoints. An *in vivo* assay is also useful for further investigation of a mutagenic effect detected by an *in vitro* system.

(2) If there is evidence that the test substance, or a reactive metabolite, will not reach the target tissue, it is not appropriate to use this test.

(e) *Test method*—(1) *Principle.* Animals are exposed to the test substance by an appropriate route. If bone marrow is used, the animals are sacrificed at appropriate times after treatment, the bone marrow extracted, and preparations made and stained (test techniques described in the references under paragraphs (g)(1), (g)(2), and (g)(3) of this section may be used). When peripheral blood is used, the blood is collected at appropriate times after treatment and smear preparations are made and stained (the test techniques described in the references

under paragraphs (g)(3), (g)(4), (g)(5), and (g)(6) of this section may be used). For studies with peripheral blood, as little time as possible should elapse between the last exposure and cell harvest. Preparations are analyzed for the presence of micronuclei.

(2) *Description*—(i) *Preparations*—(A) *Selection of animal species.* Mice or rats are recommended if bone marrow is used, although any appropriate mammalian species may be used. When peripheral blood is used, mice are recommended. However, any appropriate mammalian species may be used provided it is a species in which the spleen does not remove micronucleated erythrocytes or a species which has shown an adequate sensitivity to detect agents that cause structural or numerical chromosome aberrations. Commonly used laboratory strains of young healthy animals should be employed. At the commencement of the study, the weight variation of animals should be minimal and not exceed ±20% of the mean weight of each sex.

(B) *Housing and feeding conditions.* The temperature in the experimental animal room should be 22 °C ±3 °C). Although the relative humidity should be at least 30% and preferably not exceed 70% other than during room cleaning, the aim should be 50–60%. Lighting should be artificial, the sequence being 12 hrs light, 12 hrs dark. For feeding, conventional laboratory diets may be used with an unlimited supply of drinking water. The choice of diet may be influenced by the need to ensure a suitable admixture of a test substance when administered by this route. Animals may be housed individually, or caged in small groups of the same sex.

(C) *Preparation of the animals.* Healthy young adult animals shall be randomly assigned to the control and treatment groups. The animals are identified uniquely. The animals are acclimated to the laboratory conditions for at least 5 days. Cages should be arranged in such a way that possible effects due to cage placement are minimized.

(D) *Preparation of doses.* Solid test substances shall be dissolved or suspended in appropriate solvents or vehicles and diluted, if appropriate, prior to dosing of the animals. Liquid test substances may be dosed directly or diluted prior to dosing. Fresh preparations of the test substance should be employed unless stability data demonstrate the acceptability of storage.

(ii) *Test conditions*—(A) *Solvent/vehicle.* The solvent/vehicle shall not produce toxic effects at the dose levels used, and shall not be suspected of chemical reaction with the test substance. If other than well-known solvents/vehicles are used, their inclusion should be supported with reference data indicating their compatibility. It is recommended that wherever possible, the use of an aqueous solvent/vehicle should be considered first.

(B) *Controls.* (*1*) Concurrent positive and negative (solvent/vehicle) controls shall be included for each sex in each test. Except for treatment with the test substance, animals in the control groups should be handled in an identical manner to animals of the treatment groups.

(*2*) Positive controls shall produce micronuclei *in vivo* at exposure levels expected to give a detectable increase over background. Positive control doses should be chosen so that the effects are clear but do not immediately reveal the identity of the coded slides to the reader. It is acceptable that the positive control be administered by a route different from the test substance and sampled at only a single time. In addition, the use of chemical class-related positive control chemicals may be considered, when available. Examples of positive control substances include:

Chemical	CAS No.
Ethyl methanesulphonate	[CAS no. 62–50–0]
Ethyl nitrosourea	[CAS no. 759–73–9]
Mitomycin C	[CAS no. 50–07–7]
Cyclophosphamide (monohydrate)	[CAS no. 50–18–0] [CAS no. 6055–19–2]
Triethylenemelamine	[CAS no. 51–18–3]

(*3*) Negative controls, treated with solvent or vehicle alone, and otherwise treated in the same way as the treatment groups shall be included for every sampling time, unless acceptable interanimal variability and frequencies of cells with micronuclei are demonstrated by historical control data. If single sampling is applied for negative controls, the most appropriate time is

the first sampling time. In addition, untreated controls should also be used unless there are historical or published control data demonstrating that no deleterious or mutagenic effects are induced by the chosen solvent/vehicle.

(*4*) If peripheral blood is used, a pretreatment sample may also be acceptable as a concurrent negative control, but only in the short peripheral blood studies (e.g., one to three treatment(s)) when the resulting data are in the expected range for the historical control.

(3) *Procedure*—(i) *Number and sex of animals.* Each treated and control group shall include at least 5 analyzable animals per sex (techniques described in the reference under paragraph (g)(7) of this section may be used). If at the time of the study there are data available from studies in the same species and using the same route of exposure that demonstrate that there are no substantial differences between sexes in toxicity, then testing in a single sex will be sufficient. Where human exposure to chemicals may be sex-specific, as for example with some pharmaceutical agents, the test should be performed with animals of the appropriate sex.

(ii) *Treatment schedule.* (A) No standard treatment schedule (i.e. one, two, or more treatments at 24 h intervals) can be recommended. The samples from extended dose regimens are acceptable as long as a positive effect has been demonstrated for this study or, for a negative study, as long as toxicity has been demonstrated or the limit dose has been used, and dosing continued until the time of sampling. Test substances may also be administered as a split dose, i.e., two treatments on the same day separated by no more than a few hrs, to facilitate administering a large volume of material.

(B) The test may be performed in two ways:

(*1*) Animals shall be treated with the test substance once. Samples of bone marrow shall be taken at least twice, starting not earlier than 24 hrs after treatment, but not extending beyond 48 hrs after treatment with appropriate interval(s) between samples. The use of sampling times earlier than 24 hrs after treatment should be justified. Samples of peripheral blood shall be taken at least twice, starting not earlier than 36 hrs after treatment, with appropriate intervals following the first sample, but not extending beyond 72 hrs. When a positive response is recognized at one sampling time, additional sampling is not required.

(*2*) If two or more daily treatments are used (e.g. two or more treatments at 24 hr intervals), samples shall be collected once between 18 and 24 hrs following the final treatment for the bone marrow and once between 36 and 48 hrs following the final treatment for the peripheral blood (techniques described in the reference under paragraph (g)(8) of this section may be used).

(C) Other sampling times may be used in addition, when relevant.

(iii) *Dose levels.* If a range finding study is performed because there are no suitable data available, it shall be performed in the same laboratory, using the same species, strain, sex, and treatment regimen to be used in the main study (guidance on dose setting is provided in the reference in paragraph (g)(9) of this section). If there is toxicity, three dose levels shall be used for the first sampling time. These dose levels shall cover a range from the maximum to little or no toxicity. At the later sampling time only the highest dose needs to be used. The highest dose is defined as the dose producing signs of toxicity such that higher dose levels, based on the same dosing regimen, would be expected to produce lethality. Substances with specific biological activities at low non-toxic doses (such as hormones and mitogens) may be exceptions to the dose-setting criteria and should be evaluated on a case-by-case basis. The highest dose may also be defined as a dose that produces some indication of toxicity in the bone marrow (e.g. a reduction in the proportion of immature erythrocytes among total erythrocytes in the bone marrow or peripheral blood).

(iv) *Limit test.* If a test at one dose level of at least 2,000 mg/kg body weight using a single treatment, or as two treatments on the same day, produces no observable toxic effects, and if genotoxicity would not be expected based upon data from structurally related substances, then a full study

using three dose levels may not be considered necessary. For studies of a longer duration, the limit dose is 2,000 mg/kg/body weight/day for treatment up to 14 days, and 1,000 mg/kg/body weight/day for treatment longer than 14 days. Expected human exposure may indicate the need for a higher dose level to be used in the limit test.

(v) *Administration of doses.* The test substance is usually administered by gavage using a stomach tube or a suitable intubation cannula, or by intraperitoneal injection. Other routes of exposure may be acceptable where they can be justified. The maximum volume of liquid that can be administered by gavage or injection at one time depends on the size of the test animal. The volume should not exceed 2 ml/100g body weight. The use of volumes higher than these must be justified. Except for irritating or corrosive substances which will normally reveal exacerbated effects with higher concentrations, variability in test volume should be minimized by adjusting the concentration to ensure a constant volume at all dose levels.

(vi) *Bone marrow/blood preparation.* Bone marrow cells shall be obtained from the femurs or tibias immediately following sacrifice. Cells shall be removed from femurs or tibias, prepared and stained using established methods. Peripheral blood is obtained from the tail vein or other appropriate blood vessel. Blood cells are immediately stained supravitally (the test techniques described in the references under paragraphs (g)(4), (g)(5), and (g)(6) of this section may be used) or smear preparations are made and then stained. The use of a DNA specific stain (e.g. acridine orange (techniques described in the reference under paragraph (g)(10) of this section may be used) or Hoechst 33258 plus pyronin-Y) can eliminate some of the artifacts associated with using a non-DNA specific stain. This advantage does not preclude the use of conventional stains (e.g., Giemsa). Additional systems (e.g. cellulose columns to remove nucleated cells (the test techniques described in the references under paragraph (g)(12) of this section may be used)) can also be used provided that these systems have been shown to adequately work for micronucleus preparation in the laboratory.

(vii) *Analysis.* The proportion of immature among total (immature = mature) erythrocytes is determined for each animal by counting a total of at least 200 erythrocytes for bone marrow and 1,000 erythrocytes for peripheral blood (techniques described in the reference under paragraph (g)(13) of this section maybe used). All slides, including those of positive and negative controls, shall be independently coded before microscopic analysis. At least 2,000 immature erythrocytes per animal shall be scored for the incidence of micronucleated immature erythrocytes. Additional information may be obtained by scoring mature erythrocytes for micronuclei. When analyzing slides, the proportion of immature erythrocytes among total erythrocytes should not be less than 20% of the control value. When animals are treated continuously for 4 weeks or more, at least 2,000 mature erythrocytes per animal can also be scored for the incidence of micronuclei. Systems for automated analysis (image analysis) and cell suspensions (flow cytometry) are acceptable alternatives to manual evaluation if appropriately justified and validated.

(f) *Data and reporting*—(1) *Treatment of results.* Individual animal data shall be presented in tabular form. The experimental unit is the animal. The number of immature erythrocytes scored, the number of micronucleated immature erythrocytes, and the number of immature among total erythrocytes shall be listed separately for each animal analyzed. When animals are treated continuously for 4 weeks or more, the data on mature erythrocytes should also be given if it is collected. The proportion of immature among total erythrocytes and, if considered applicable, the percentage of micronucleated erythrocytes shall be given for each animal. If there is no evidence for a difference in response between the sexes, the data from both sexes may be combined for statistical analysis.

(2) *Evaluation and interpretation of results.* (i) There are several criteria for determining a positive result, such as a dose-related increase in the number of

micronucleated cells or a clear increase in the number of micronucleated cells in a single dose group at a single sampling time. Biological relevance of the results should be considered first. Statistical methods may be used as an aid in evaluating the test results (the test techniques described in the references paragraphs (g)(14) and (g)(15) of this section may be used). Statistical significance should not be the only determining factor for a positive response. Equivocal results should be clarified by further testing preferably using a modification of experimental conditions.

(ii) A test substance for which the results do not meet the criteria in paragraph (f)(2)(i) of this section is considered non-mutagenic in this test.

(iii) Although most experiments will give clearly positive or negative results, in rare cases the data set will preclude making a definite judgement about the activity of the test substance. Results, may remain equivocal or questionable regardless of the number of times the experiment is repeated. Positive results in the micronucleus test indicate that a substance induces micronuclei which are the result of chromosomal damage or damage to the mitotic apparatus in the erythroblasts of the test species. Negative results indicate that, under the test conditions, the test substance does not produce micronuclei in the immature erythrocytes of the test species.

(iv) The likelihood that the test substance or its metabolites reach the general circulation or specifically the target tissue (e.g. systemic toxicity) should be discussed.

(3) *Test report.* The test report shall include the following information:

(i) Test substance:

(A) Identification data and CAS no., if known.

(B) Physical nature and purity.

(C) Physiochemical properties relevant to the conduct of the study.

(D) Stability of the test substance, if known.

(ii) Solvent/vehicle:

(A) Justification for choice of vehicle.

(B) Solubility and stability of the test substance in the solvent/vehicle, if known.

(iii) Test animals:

(A) Species/strain used.

(B) Number, age, and sex of animals.

(C) Source, housing conditions, diet, etc.

(D) Individual weight of the animals at the start of the test, including body weight range, mean and standard deviation for each group.

(iv) Test conditions:

(A) Positive and negative (vehicle/solvent) control data.

(B) Data from range-finding study, if conducted.

(C) Rationale for dose level selection.

(D) Details of test substance preparation.

(E) Details of the administration of the test substance.

(F) Rationale for route of administration.

(G) Methods for verifying that the test substance reached the general circulation or target tissue, if applicable.

(H) Conversion from diet/drinking water test substance concentration parts per million (ppm) to the actual dose (mg/kg body weight/day), if applicable.

(I) Details of food and water quality.

(J) Detailed description of treatment and sampling schedules.

(K) Methods of slide preparation.

(L) Methods for measurement of toxicity.

(M) Criteria for scoring micronucleated immature erythrocytes.

(N) Number of cells analyzed per animal.

(O) Criteria for considering studies as positive, negative or equivocal.

(v) Results:

(A) Signs of toxicity.

(B) Proportion of immature erythrocytes among total erythrocytes.

(C) Number of micronucleated immature erythrocytes, given separately for each animal.

(D) Mean = ±standard deviation of micronucleated immature erythrocytes per group.

(E) Dose-response relationship, where possible.

(F) Statistical analyses and method applied.

(G) Concurrent and historical negative control data.

(H) Concurrent positive control data.

(vi) Discussion of the results.

(vii) Conclusion.

(g) *References.* For additional background information on this test guideline, the following references should be consulted. These references are available for inspection at the TSCA Nonconfidential Information Center, Rm. NE-B607, Environmental Protection Agency, 401 M St., SW., Washington, DC, 12 noon to 4 p.m., Monday through Friday, except legal holidays.

(1) Heddle, J.A. A Rapid *In Vivo* Test for Chromosomal Damage. *Mutation Research*. 18, 187–190 (1973).

(2) Schmid, W. The Micronucleus Test. *Mutation Research*. 31, 9–15 (1975).

(3) Mavournin, K.H., Blakey, D.H., Cimino, M.C., Salamone, M.F., and Heddle, J.A. The *In Vivo* Micronucleus Assay in Mammalian Bone Marrow and Peripheral Blood. A report of the U.S. Environmental Protection Agency Gene-Tox Program. *Mutation Research*. 239, 29–80 (1990).

(4) Hayashi, M., Morita, T., Kodama, Y., Sofuni, T., and Ishidate, Jr., M. The Micronucleus Assay with Mouse Peripheral Blood Reticulocytes Using Acridine Orange-Coated Slides. *Mutation Research*. 245, 245–249 (1990).

(5) The Collaborative Study Group for the Micronucleus Test (1992). Micronucleus Test with Mouse Peripheral Blood Erythrocytes by Acridine Orange Supravital Staining: The Summary Report of the 5th Collaborative Study by CSGMT/JEMS. MMS. *Mutation Research*. 278, 83–98.

(6) The Collaborative Study Group for the Micronucleus Test (CSGMT/JEMMS.MMS, The Mammalian Mutagenesis Study Group of the Environmental Mutagen Society of Japan) Protocol recommended for the short-term mouse peripheral blood micronucleus test. *Mutagenesis.* 10, 153–159 (1995).

(7) Hayashi, M., Tice, R.R., MacGregor, J.T., Anderson, D., Blakey, D.H., Kirsch-Volders, M., Oleson, Jr. F.B., Pacchierotti, F., Romagna, F., Shimada, H., Sutou, S., and Vannier, B. *In Vivo* Rodent Erythrocyte Micronucleus Assay. *Mutation Research*. 312, 293–304 (1994).

(8) Higashikuni, N. and Sutou, S. An optimal, generalized sampling time of 30 =/- 6 h after double dosing in the mouse peripheral blood micronucleus test. *Mutagenesis.* 10, 313–319 (1995).

(9) Fielder, R.J., Allen, J.A., Boobis, A.R., Botham, P.A., Doe, J., Esdaile, D.J., Gatehouse, D.G., Hodson-Walker, G., Morton, D.B., Kirkland, D. J., and Richold, M. Report of British Toxicology Society/UK Environmental Mutagen Society Working Group: Dose Setting in *In Vivo* Mutagenicity Assays. *Mutagenesis.* 7, 313–319 (1992).

(10) Hayashi, M., Sofuni, T., and Ishidate, Jr., M. An Application of Acridine Orange Fluorescent Staining to the Micronucleus Test. *Mutation Research*. 120, 241–247 (1983).

(11) MacGregor, J.T., Wehr, C.M., and Langlois, R.G. A Simple Fluorescent Staining Procedure for Micronuclei and RNA in Erythrocytes Using Hoechst 33258 and Pyronin Y. *Mutation Research*. 120, 269–275 (1983).

(12) Romagna, F. and Staniforth, C.D. The automated bone marrow micronucleus test. *Mutation Research*. 213, 91–104 (1989).

(13) Gollapudi, B. and McFadden, L.G. Sample size for the estimation of polychromatic to normochromatic eruthrocyte ratio in the bone marrow micronucleus test. *Mutation Research*. 347, 97–99 (1995).

(14) Richold, M., Ashby, J., Bootman, J., Chandley, A., Gatehouse, D.G., and Henderson, L. Ed. Kirkland, D.J. *In Vivo* Cytogenetics Assays. Basic Mutagenicity Tests, UKEMS Recommended Procedures. UKEMS Subcommittee on Guidelines for Mutagenicity Testing. Report. Part I revised (Cambridge University Press, Cambridge, New York, Port Chester, Melbourne, Sydney, 1990) pp. 115–141.

(15) Lovell, D.P., Anderson, D., Albanese, R., Amphlett, G.E., Clare, G., Ferguson, R., Richold, M., Papworth, D.G., and Savage, J.R.K. Ed. D.J. Kirkland. Statistical Analysis of *In Vivo* Cytogenetic Assays. Statistical Evaluation of Mutagenicity Test Data. UKEMS Sub-Committee on Guidelines for Mutagenicity Testing, Report, Part III. (Cambridge University Press, Cambridge, New York, Port Chester, Melbourne, Sydney, 1989) pp. 184–232.

(16) Heddle, J.A., Salamone, M.F., Hite, M., Kirkhart, B., Mavournin, K., MacGregor, J.G., and Newell, G.W. The

Induction of Micronuclei as a Measure of Genotoxicity. *Mutation Research*. 123: 61–118 (1983).

(17) MacGregor, J.T., Heddle, J.A., Hite, M., Margolin, G.H., Ramel C., Salamone, M.F., Tice, R.R., and Wild, D. Guidelines for the Conduct of Micronucleus Assays in Mammalian Bone Marrow Erythrocytes. *Mutation Research*. 189: 103–112 (1987).

(18) MacGregor, J.T., Wehr, C.M., Henika, P.R., and Shelby, M.E. (1990). The *In Vivo* Erythrocyte Micronucleus Test: Measurement at Steady State Increases Assay Efficiency and Permits Integration with Toxicity Studies. *Fundamental Applied Toxicology*. 14: 513–522.

(19) MacGregor, J.T., Schlegel, R. Choy, W.N., and Wehr, C.M. Eds. Hayes, A.W., Schnell, R.C., and Miya, T.S. Micronuclei in Circulating Erythrocytes: A Rapid Screen for Chromosomal Damage During Routine Toxicity Testing in Mice. *Developments in Science and Practice of Toxicology* (Elsevier, Amsterdam, 1983) pp. 555–558.

[62 FR 43824, Aug. 15, 1997, as amended at 64 FR 35079, June 30, 1999]

§ 799.9620 TSCA neurotoxicity screening battery.

(a) *Scope.* This section is intended to meet the testing requirements under section 4 of TSCA. This neurotoxicity screening battery consists of a functional observational battery, motor activity, and neuropathology. The functional observational battery consists of noninvasive procedures designed to detect gross functional deficits in animals and to better quantify behavioral or neurological effects detected in other studies. The motor activity test uses an automated device that measures the level of activity of an individual animal. The neuropathological techniques are designed to provide data to detect and characterize histopathological changes in the central and peripheral nervous system. This battery is designed to be used in conjunction with general toxicity studies and changes should be evaluated in the context of both the concordance between functional neurological and neuropatholgical effects, and with respect to any other toxicological effects seen. This test battery is not intended to provide a complete evaluation of neurotoxicity, and additional functional and morphological evaluation may be necessary to assess completely the neurotoxic potential of a chemical.

(b) *Source.* The source material used in developing this TSCA test guideline is the OPPTS harmonized test guideline 870.6200 (June 1996 Public Draft). This source is available at the address in paragraph (g) of this section.

(c) *Definitions.* The following definitions apply to this section.

ED is effective dose.

Motor activity is any movement of the experimental animal.

Neurotoxicity is any adverse effect on the structure or function of the nervous system related to exposure to a chemical substance.

Toxic effect is an adverse change in the structure or function of an experimental animal as a result of exposure to a chemical substance.

(d) *Principle of the test method.* The test substance is administered to several groups of experimental animals, one dose being used per group. The animals are observed under carefully standardized conditions with sufficient frequency to ensure the detection and quantification of behavioral and/or neurologic abnormalities, if present. Various functions that could be affected by neurotoxicants are assessed during each observation period. Measurements of motor activity of individual animals are made in an automated device. The animals are perfused and tissue samples from the nervous system are prepared for microscopic examination. The exposure levels at which significant neurotoxic effects are produced are compared to one another and to those levels that produce other toxic effects.

(e) *Test procedures*—(1) *Animal selection*—(i) *Species.* In general, the laboratory rat should be used. Under some circumstances, other species, such as the mouse or the dog, may be more appropriate, although not all of the battery may be adaptable to other species.

(ii) *Age.* Young adults (at least 42 days old for rats) shall be used.

(iii) *Sex.* Both males and females shall be used. Females shall be nulliparous and nonpregnant.

(2) *Number of animals.* At least 10 males and 10 females should be used in each dose and control group for behavioral testing. At least five males and five females should be used in each dose and control group for terminal neuropathology. If interim neuropathological evaluations are planned, the number should be increased by the number of animals scheduled to be perfused before the end of the study. Animals shall be randomly assigned to treatment and control groups.

(3) *Control groups.* (i) A concurrent (vehicle) control group is required. Subjects shall be treated in the same way as for an exposure group except that administration of the test substance is omitted. If the vehicle used has known or potential toxic properties, both untreated or saline treated and vehicle control groups are required.

(ii) Positive control data from the laboratory performing the testing shall provide evidence of the ability of the observational methods used to detect major neurotoxic endpoints including limb weakness or paralysis, tremor, and autonomic signs. Positive control data are also required to demonstrate the sensitivity and reliability of the activity-measuring device and testing procedures. These data should demonstrate the ability to detect chemically induced increases and decreases in activity. Positive control groups exhibiting central nervous system pathology and peripheral nervous system pathology are also required. Separate groups for peripheral and central neuropathology are acceptable (e.g. acrylamide and trimethyl tin). Permanently injurious substances need not be used for the behavioral tests. Historical data may be used if the essential aspects of the experimental procedure remain the same. Periodic updating of positive control data is recommended. New positive control data should also be collected when personnel or some other critical element in the testing laboratory has changed.

(4) *Dose level and dose selection.* At least three doses shall be used in addition to the vehicle control group. The data should be sufficient to produce a dose-effect curve. The Agency strongly encourage the use of equally spaced doses and a rationale for dose selection that will maximally support detection of dose-effect relations. For acute studies, dose selection may be made relative to the establishment of a benchmark dose (BD). That is, doses may be specified as successive fractions, e.g. 0.5, 0.25, ...n of the BD. The BD itself may be estimated as the highest nonlethal dose as determined in a preliminary range-finding lethality study. A variety of test methodologies may be used for this purpose, and the method chosen may influence subsequent dose selection. The goal is to use a dose level that is sufficient to be judged a limit dose, or clearly toxic.

(i) *Acute studies.* The high dose need not be greater than 2 g/kg. Otherwise, the high dose should result in significant neurotoxic effects or other clearly toxic effects, but not result in an incidence of fatalities that would preclude a meaningful evaluation of the data. This dose may be estimated by a BD procedure as described under paragraph (e)(4) of this section, with the middle and low dose levels chosen as fractions of the BD dose. The lowest dose should produce minimal effect, e.g. an ED10, or alternatively, no effects.

(ii) *Subchronic and chronic studies.* The high dose need not be greater than 1 g/kg. Otherwise, the high dose level should result in significant neurotoxic effects or other clearly toxic effects, but not produce an incidence of fatalities that would prevent a meaningful evaluation of the data. The middle and low doses should be fractions of the high dose. The lowest dose should produce minimal effects, e.g. an ED10, or alternatively, no effects.

(5) *Route of exposure.* Selection of route may be based on several criteria including, the most likely route of human exposure, bioavailability, the likelihood of observing effects, practical difficulties, and the likelihood of producing nonspecific effects. For many materials, it should be recognized that more than one route of exposure may be important and that these criteria may conflict with one another. Initially only one route is required for screening for neurotoxicity. The route that best meets these criteria should

be selected. Dietary feeding will generally be acceptable for repeated exposures studies.

(6) *Combined protocol.* The tests described in this screening battery may be combined with any other toxicity study, as long as none of the requirements of either are violated by the combination.

(7) *Study conduct*—(i) *Time of testing.* All animals shall be weighed on each test day and at least weekly during the exposure period.

(A) *Acute studies.* At a minimum, for acute studies observations and activity testing shall be made before the initiation of exposure, at the estimated time of peak effect within 8 hrs of dosing, and at 7 and 14 days after dosing. Estimation of times of peak effect may be made by dosing pairs of rats across a range of doses and making regular observations of gait and arousal.

(B) *Subchronic and chronic studies.* In a subchronic study, at a minimum, observations and activity measurements shall be made before the initiation of exposure and before the daily exposure, or for feeding studies at the same time of day, during the 4th, 8th, and 13th weeks of exposure. In chronic studies, at a minimum, observations and activity measurements shall be made before the initiation of exposure and before the daily exposure, or for feeding studies at the same time of day, every 3 months.

(ii) *Functional observational battery*—(A) *General conduct.* All animals in a given study shall be observed carefully by trained observers who are unaware of the animals' treatment, using standardized procedures to minimize observer variability. Where possible, it is advisable that the same observer be used to evaluate the animals in a given study. If this is not possible, some demonstration of interobserver reliability is required. The animals shall be removed from the home cage to a standard arena for observation. Effort should be made to ensure that variations in the test conditions are minimal and are not systematically related to treatment. Among the variables that can affect behavior are sound level, temperature, humidity, lighting, odors, time of day, and environmental distractions. Explicit, operationally defined scales for each measure of the battery are to be used. The development of objective quantitative measures of the observational end-points specified is encouraged. Examples of observational procedures using defined protocols may be found in the references under paragraphs (g)(5), (g)(6), and (g)(9) of this section. The functional observational battery shall include a thorough description of the subject's appearance, behavior, and functional integrity. This shall be assessed through observations in the home cage and while the rat is moving freely in an open field, and through manipulative tests. Testing should proceed from the least to the most interactive with the subject. Scoring criteria, or explicitly defined scales, should be developed for those measures which involve subjective ranking.

(B) *List of measures.* The functional observational battery shall include the following list of measures:

(*1*) Assessment of signs of autonomic function, including but not limited to:

(*i*) Ranking of the degree of lacrimation and salivation, with a range of severity scores from none to severe.

(*ii*) Presence or absence of piloerection and exophthalmus.

(*iii*) Ranking or count of urination and defecation, including polyuria and diarrhea. This is most easily conducted during the open field assessment.

(*iv*) Pupillary function such as constriction of the pupil in response to light or a measure of pupil size.

(*v*) Degree of palpebral closure, e.g., ptosis.

(*2*) Description, incidence, and severity of any convulsions, tremors, or abnormal motor movements, both in the home cage and the open field.

(*3*) Ranking of the subject's reactivity to general stimuli such as removal from the cage or handling, with a range of severity scores from no reaction to hyperreactivity.

(*4*) Ranking of the subject's general level of activity during observations of the unperturbed subject in the open field, with a range of severity scores from unresponsive to hyperactive.

(*5*) Descriptions and incidence of posture and gait abnormalities observed in the home cage and open field.

(*6*) Ranking of any gait abnormalities, with a range of severity scores from none to severe.

(*7*) Forelimb and hindlimb grip strength measured using an objective procedure (the procedure described in the reference under paragraph (g)(8) of this section may be used).

(*8*) Quantitative measure of landing foot splay (the procedure described in the reference under paragraph (g)(3) of this section may be used).

(*9*) Sensorimotor responses to stimuli of different modalities will be used to detect gross sensory deficits. Pain perception may be assessed by a ranking or measure of the reaction to a tail-pinch, tail-flick, or hot-plate. The response to a sudden sound, e.g., click or snap, may be used to assess audition.

(*10*) Body weight.

(*11*) Description and incidence of any unusual or abnormal behaviors, excessive or repetitive actions (stereotypies), emaciation, dehydration, hypotonia or hypertonia, altered fur appearance, red or crusty deposits around the eyes, nose, or mouth, and any other observations that may facilitate interpretation of the data.

(C) *Additional measures.* Other measures may also be included and the development and validation of new tests is encouraged. Further information on the neurobehavioral integrity of the subject may be provided by:

(*1*) Count of rearing activity on the open field.

(*2*) Ranking of righting ability.

(*3*) Body temperature.

(*4*) Excessive or spontaneous vocalizations.

(*5*) Alterations in rate and ease of respiration, e.g., rales or dyspnea.

(*6*) Sensorimotor responses to visual or proprioceptive stimuli.

(iii) *Motor activity.* Motor activity shall be monitored by an automated activity recording apparatus. The device used must be capable of detecting both increases and decreases in activity, i.e., baseline activity as measured by the device must not be so low as to preclude detection of decreases nor so high as to preclude detection of increases in activity. Each device shall be tested by standard procedures to ensure, to the extent possible, reliability of operation across devices and across days for any one device. In addition, treatment groups must be balanced across devices. Each animal shall be tested individually. The test session shall be long enough for motor activity to approach asymptotic levels by the last 20% of the session for nontreated control animals. All sessions shall have the same duration. Treatment groups shall be counterbalanced across test times. Effort should be made to ensure that variations in the test conditions are minimal and are not systematically related to treatment. Among the variables which can affect motor activity are sound level, size and shape of the test cage, temperature, relative humidity, lighting conditions, odors, use of the home cage or a novel test cage, and environmental distractions.

(iv) *Neuropathology: Collection, processing and examination of tissue samples.* To provide for adequate sampling as well as optimal preservation of cellular integrity for the detection of neuropathological alterations, tissue shall be prepared for histological analysis using in situ perfusion and paraffin and/or plastic embedding procedures. Paraffin embedding is acceptable for tissue samples from the central nervous system. Plastic embedding of tissue samples from the central nervous system is encouraged, when feasible. Plastic embedding is required for tissue samples from the peripheral nervous system. Subject to professional judgment and the type of neuropathological alterations observed, it is recommended that additional methods, such as glial fibrillary acidic protein (GFAP) immunohistochemistry and/or methods known as Bodian's or Bielchowsky's silver methods be used in conjunction with more standard stains to determine the lowest dose level at which neuropathological alterations are observed. When new or existing data provide evidence of structural alterations it is recommended that the GFAP immunoassay also be considered. A description of this technique can be found in the reference under paragraph (g)(10) of this section.

(A) *Fixation and processing of tissue.* The nervous system shall be fixed by in situ perfusion with an appropriate

aldehyde fixative. Any gross abnormalities should be noted. Tissue samples taken should adequately represent all major regions of the nervous system. The tissue samples should be postfixed and processed according to standardized published histological protocols (protocols described in the references under paragraphs (g)(1), (g)(2), or (g)(11) of this section may be used). Tissue blocks and slides should be appropriately identified when stored. Histological sections should be stained for hematoxylin and eosin (H&E), or a comparable stain according to standard published protocols (some of these protocols are described in the references under paragraphs (g)(1) and (g)(11) of this section).

(B) *Qualitative examination.* Representative histological sections from the tissue samples should be examined microscopically by an appropriately trained pathologist for evidence of neuropathological alterations. The nervous system shall be thoroughly examined for evidence of any treatment-related neuropathological alterations. Particular attention should be paid to regions known to be sensitive to neurotoxic insult or those regions likely to be affected based on the results of functional tests. Such treatment-related neuropathological alterations should be clearly distinguished from artifacts resulting from influences other than exposure to the test substance. A stepwise examination of tissue samples is recommended. In such a stepwise examination, sections from the high dose group are first compared with those of the control group. If no neuropathological alterations are observed in samples from the high dose group, subsequent analysis is not required. If neuropathological alterations are observed in samples from the high dose group, samples from the intermediate and low dose groups are then examined sequentially.

(C) *Subjective diagnosis.* If any evidence of neuropathological alterations is found in the qualitative examination, then a subjective diagnosis shall be performed for the purpose of evaluating dose-response relationships. All regions of the nervous system exhibiting any evidence of neuropathological changes should be included in this analysis. Sections from all dose groups from each region will be coded and examined in randomized order without knowledge of the code. The frequency of each type and severity of each lesion will be recorded. After all samples from all dose groups including all regions have been rated, the code will be broken and statistical analysis performed to evaluate dose-response relationships. For each type of dose-related lesion observed, examples of different degrees of severity should be described. Photomicrographs of typical examples of treatment-related regions are recommended to augment these descriptions. These examples will also serve to illustrate a rating scale, such as 1=, 2=, and 3= for the degree of severity ranging from very slight to very extensive.

(f) *Data reporting and evaluation.* The final test report shall include the following information:

(1) *Description of equipment and test methods.* A description of the general design of the experiment and any equipment used shall be provided. This shall include a short justification explaining any decisions involving professional judgment.

(i) A detailed description of the procedures used to standardize observations, including the arena and scoring criteria.

(ii) Positive control data from the laboratory performing the test that demonstrate the sensitivity of the procedures being used. Historical data may be used if all essential aspects of the experimental protocol are the same. Historical control data can be critical in the interpretation of study findings. The Agency encourages submission of such data to facilitate the rapid and complete review of the significance of effects seen.

(2) *Results.* The following information shall be arranged by test group dose level.

(i) In tabular form, data for each animal shall be provided showing:

(A) Its identification number.

(B) Its body weight and score on each sign at each observation time, the time and cause of death (if appropriate), total session activity counts, and intrasession subtotals for each day measured.

(ii) Summary data for each group must include:

(A) The number of animals at the start of the test.

(B) The number of animals showing each observation score at each observation time.

(C) The mean and standard deviation for each continuous endpoint at each observation time.

(D) Results of statistical analyses for each measure, where appropriate.

(iii) All neuropathological observations shall be recorded and arranged by test groups. This data may be presented in the following recommended format:

(A) *Description of lesions for each animal.* For each animal, data must be submitted showing its identification (animal number, sex, treatment, dose, and duration), a list of structures examined as well as the locations, nature, frequency, and severity of lesions. Inclusion of photomicrographs is strongly recommended for demonstrating typical examples of the type and severity of the neuropathological alterations observed. Any diagnoses derived from neurological signs and lesions including naturally occurring diseases or conditions, should be recorded.

(B) *Counts and incidence of neuropathological alterations by test group.* Data should be tabulated to show:

(*1*) The number of animals used in each group and the number of animals in which any lesion was found.

(*2*) The number of animals affected by each different type of lesion, the locations, frequency, and average grade of each type of lesion.

(3) *Evaluation of data.* The findings from the screening battery should be evaluated in the context of preceding and/or concurrent toxicity studies and any correlated functional and histopathological findings. The evaluation shall include the relationship between the doses of the test substance and the presence or absence, incidence and severity, of any neurotoxic effects. The evaluation shall include appropriate statistical analyses, for example, parametric tests for continuous data and nonparametric tests for the remainder. Choice of analyses should consider tests appropriate to the experimental design, including repeated measures. There may be many acceptable ways to analyze data.

(g) *References.* For additional background information on this test guideline, the following references should be consulted. These references are available for inspection at the TSCA Nonconfidential Information Center, Rm. NE-B607, Environmental Protection Agency, 401 M St., SW., Washington, DC, 12 noon to 4 p.m., Monday through Friday, except legal holidays.

(1) Bennet, H.S. *et al.* Science and art in the preparing tissues embedded in plastic for light microscopy, with special reference to glycol methacrylate, glass knives and simple stains. *Stain Technology*. 51:71–97 (1976).

(2) Di Sant Agnese, P.A. and De Mesy Jensen, K. Dibasic staining of large epoxy sections and application to surgical pathology. *American Journal of Clinical Pathology*. 81:25–29 (1984).

(3) Edwards, P.M. and Parker, V.H. A simple, sensitive and objective method for early assessment of acrylamide neuropathy in rats. *Toxicology and Applied Pharmacology*. 40:589–591 (1977).

(4) Finger, F.W. Ed. Myers, R.D. Measuring Behavioral Activity. Vol. 2. *Methods in Psychobiology* (Academic, NY, 1972) pp.1–19.

(5) Gad, S. A neuromuscular screen for use in industrial toxicology. *Journal of Toxicology and Environmental Health*. 9:691–704 (1982).

(6) Irwin, S. Comprehensive observational assessment: Ia. A systematic quantitative procedure for assessing the behavioral physiological state of the mouse. *Psychopharmacologia*. 13:222–257 (1968).

(7) Kinnard, E.J. and Watzman, N. Techniques utilized in the evaluation of psychotropic drugs on animals activity. *Journal of Pharmaceutical Sciences*. 55:995–1012 (1966).

(8) Meyer, O.A. *et al.* A method for the routine assessment of fore- and hindlimb grip strength of rats and mice. *Neurobehavioral Toxicology*. 1:233–236 (1979).

(9) Moser V.C. *et al.* Comparison of chlordimeform and carbaryl using a functional observational battery. *Fundamental and Applied Toxicology*. 11:189–206 (1988).

(10) O'Callaghan, J.P. Quantification of glial fibrillary acidic protein: Comparison of slot-immunobinding assays with a novel sandwich ELISA. *Neurotoxicology and Teratology*. 13:275–281 (1991).

(11) Pender, M.P. A simple method for high resolution light microscopy of nervous tissue. *Journal of Neuroscience Methods*. 15:213–218 (1985).

(12) Reiter, L.W. Use of activity measures in behavioral toxicology. *Environmental Health Perspectives*. 26:9–20 (1978).

(13) Reiter, L.W. and MacPhail, R.C. Motor activity: A survey of methods with potential use in toxicity testing. *Neurobehavorial Toxicology*. 1—Supplement. 1:53–66 (1979).

(14) Robbins, T.W. Eds. Iversen, L.L., Iverson, D.S., and Snyder, S.H. A critique of the methods available for the measurement of spontaneous motor activity. Vol 7. *Handbook of Psychopharmacology* (Plenum, NY, 1977) pp. 37–82.

[62 FR 43824, Aug. 15, 1997, as amended at 64 FR 35080, June 30, 1999]

§ 799.9630 TSCA developmental neurotoxicity.

(a) *Scope*—(1) *Applicability*. This section is intended to meet the testing requirements *under* section 4 of the Toxic Substances Control Act (TSCA).

(2) *Source*. The source material used in developing this TSCA test guideline is the OPPTS harmonized test guideline 870.6300 (August 1998).

(b) *Purpose*. In the assessment and evaluation of the toxic characteristics of a chemical substance or mixture (test substance), determination of the potential for developmental neurotoxicity is important. This study is designed to develop data on the potential functional and morphological hazards to the nervous system which may arise in the offspring from exposure of the mother during pregnancy and lactation.

(c) *Principle of the test method*. The test substance is administered to several groups of pregnant animals during gestation and early lactation, one dose level being used per group. Offspring are randomly selected from within litters for neurotoxicity evaluation. The evaluation includes observations to detect gross neurologic and behavioral abnormalities, determination of motor activity, response to auditory startle, assessment of learning, neuropathological evaluation, and brain weights. This protocol may be used as a separate study, as a followup to a standard developmental toxicity and/or adult neurotoxicity study, or as part of a two-generation reproduction study, with assessment of the offspring conducted on the second (F^2) generation.

(d) *Test procedure*—(1) *Animal selection*—(i) *Species and strain*. Testing must be performed in the rat. Because of its differences in timing of developmental events compared to strains that are more commonly tested in other developmental and reproductive toxicity studies, it is preferred that the Fischer 344 strain not be used. If a sponsor wishes to use the Fischer 344 rat or a mammalian species other than the rat, ample justification/reasoning for this selection must be provided.

(ii) *Age*. Young adult (nulliparous females) animals must be used.

(iii) *Sex*. Pregnant female animals must be used at each dose level.

(iv) *Number of animals*. (A) The objective is for a sufficient number of pregnant rats to be exposed to the test substance to ensure that an adequate number of offspring are produced for neurotoxicity evaluation. At least 20 litters are recommended at each dose level.

(B) On postnatal day 4, the size of each litter should be adjusted by eliminating extra pups by random selection to yield, as nearly as possible, four male and four females per litter. Whenever the number of pups of either sex prevents having four of each sex per litter, partial adjustment (for example, five males and three females) is permitted. Testing is not appropriate for litters of less than seven pups. Elimination of runts only is not appropriate. Individual pups should be identified uniquely after standardization of litters. A method that may be used for identification can be found under paragraph (f)(1) of this section.

(v) *Assignment of animals for behavioral tests, brain weights, and neuropathological evaluations*. After standardization of litters, one male or

one female from each litter (total of 10 males and 10 females per dose group) must be randomly assigned to one of the following tests: Motor activity, auditory startle, and learning and memory, in weanling and adult animals. On postnatal day 11, either 1 male or 1 female pup from each litter (total of 10 males and 10 females per dose group) must be sacrificed. Brain weights must be measured in all of these pups and, of these pups, six per sex per dose must be selected for neuropathological evaluation. At the termination of the study, either 1 male or 1 female from each litter (total of 10 males and 10 females per dose group) must be sacrificed and brain weights must be measured. An additional group of six animals per sex per dose group (one male or one female per litter) must be sacrificed at the termination of the study for neuropathological evaluation.

(2) *Control group.* A concurrent control group is required. This group must be a sham-treated group or, if a vehicle is used in administering the test substance, a vehicle control group. The vehicle must neither be developmentally toxic nor have effects on reproduction. Animals in the control group must be handled in an identical manner to test group animals.

(3) *Dose levels and dose selection.* (i) At least three dose levels of the test substance plus a control group (vehicle control, if a vehicle is used) must be used.

(ii) If the test substance has been shown to be developmentally toxic either in a standard developmental toxicity study or in a pilot study, the highest dose level must be the maximum dose which will not induce in utero or neonatal death or malformations sufficient to preclude a meaningful evaluation of neurotoxicity.

(iii) If a standard developmental toxicity study has not been conducted, the highest dose level, unless limited by the physicochemical nature or biological properties of the substance, must induce some overt maternal toxicity, but must not result in a reduction in weight gain exceeding 20 percent during gestation and lactation.

(iv) The lowest dose should not produce any grossly observable evidence of either maternal or developmental neurotoxicity.

(v) The intermediate doses must be equally spaced between the highest and lowest doses used.

(4) *Dosing period.* Day 0 of gestation is the day on which a vaginal plug and/or sperm are observed. The dosing period must cover the period from day 6 of gestation through day 10 postnatally. Dosing should not occur on the day of parturition in those animals who have not completely delivered their offspring.

(5) *Administration of the test substance.* The test substance or vehicle must be administered orally. Other routes of administration may be acceptable, on a case-by-case basis, with ample justification/reasoning for this selection. The test substance or vehicle must be administered based on the most recent weight determination.

(6) *Observation of dams.* (i) A gross examination of the dams must be made at least once each day before daily treatment.

(ii) Ten dams per group must be observed outside the home cage at least twice during the gestational dosing period (days 6–21) and twice during the lactational dosing period (days 1–10) for signs of toxicity. The animals must be observed by trained technicians who are unaware of the animals' treatment, using standardized procedures to maximize interobserver reliability. Where possible, it is advisable that the same observer be used to evaluate the animals in a given study. If this is not possible, some demonstration of interobserver reliability is required.

(iii) During the treatment and observation periods under paragraph (d)(6)(ii) of this section, observations must include:

(A) Assessment of signs of autonomic function, including but not limited to:

(*1*) Ranking of the degree of lacrimation and salivation, with a range of severity scores from none to severe.

(*2*) Presence or absence of piloerection and exophthalmus.

(*3*) Ranking or count of urination and defecation, including polyuria and diarrhea.

(*4*) Pupillary function such as constriction of the pupil in response to light or a measure of pupil size.

(*5*) Degree of palpebral closure, e.g., ptosis.

(B) Description, incidence, and severity of any convulsions, tremors, or abnormal movements.

(C) Description and incidence of posture and gait abnormalities.

(D) Description and incidence of any unusual or abnormal behaviors, excessive or repetitive actions (stereotypies), emaciation, dehydration, hypotonia or hypertonia, altered fur appearance, red or crusty deposits around the eyes, nose, or mouth, and any other observations that may facilitate interpretation of the data.

(iv) Signs of toxicity must be recorded as they are observed, including the time of onset, degree, and duration.

(v) Animals must be weighed at least weekly and on the day of delivery and postnatal days 11 and 21 (weaning) and such weights must be recorded.

(vi) The day of delivery of litters must be recorded and considered as postnatal day 0.

(7) *Study conduct*—(i) *Observation of offspring.* (A) All offspring must be examined cage-side at least daily for gross signs of mortality or morbidity.

(B) A total of 10 male offspring and 10 female offspring per dose group must be examined outside the cage for signs of toxicity on days 4, 11, 21, 35, 45, and 60. The offspring must be observed by trained technicians, who are unaware of the treatment being used, using standardized procedures to maximize interobserver reliability. Where possible, it is advisable that the same observer be used to evaluate the animals in a given study. If this is not possible, some demonstration of interobserver reliability is required. At a minimum, the end points outlined in paragraph (d)(6)(iii) of this section must be monitored as appropriate for the developmental stage being observed.

(C) Any gross signs of toxicity in the offspring must be recorded as they are observed, including the time of onset, degree, and duration.

(ii) *Developmental landmarks.* Live pups must be counted and each pup within a litter must be weighed individually at birth or soon thereafter, and on postnatal days 4, 11, 17, and 21 and at least once every 2 weeks thereafter. The age of vaginal opening and preputial separation must be determined. General procedures for these determinations may be found in paragraphs (f)(1) and (f)(11) of this section.

(iii) *Motor activity.* Motor activity must be monitored specifically on postnatal days 13, 17, 21, and 60 (+2 days). Motor activity must be monitored by an automated activity recording apparatus. The device must be capable of detecting both increases and decreases in activity, (i.e., baseline activity as measured by the device must not be so low as to preclude detection of decreases nor so high as to preclude detection of increases in activity). Each device must be tested by standard procedures to ensure, to the extent possible, reliability of operation across devices and across days for any one device. In addition, treatment groups must be balanced across devices. Each animal must be tested individually. The test session must be long enough for motor activity to approach asymptotic levels by the last 20 percent of the session for nontreated control animals. All sessions must have the same duration. Treatment groups must be counter-balanced across test times. Activity counts must be collected in equal time periods of no greater than 10 minutes duration. Efforts must be made to ensure that variations in the test conditions are minimal and are not systematically related to treatment. Among the variables that can affect motor activity are sound level, size and shape of the test cage, temperature, relative humidity, light conditions, odors, use of home cage or novel test cage, and environmental distractions. Additional information on the conduct of a motor activity study may be obtained in § 799.9620.

(iv) *Auditory startle test.* An auditory startle habituation test should be performed on the offspring around the time of weaning and around day 60. Day of testing should be counterbalanced across treated and control groups. Details on the conduct of this testing may be obtained under paragraph (f)(1) of this section. In performing the auditory startle task, the mean response amplitude on each

block of 10 trials (5 blocks of 10 trials per session on each day of testing) must be made. While use of prepulse inhibition is not a requirement, it is highly recommended. Details on the conduct of this test may be obtained in paragraph (f)(10) of this section.

(v) *Learning and memory tests.* A test of associative learning and memory should be conducted around the time of weaning and around day 60. Day of testing should be counterbalanced across treated and control groups. The same or separate tests may be used at these two stages of development. Some flexibility is allowed in the choice of tests for learning and memory in weanling and adult rats. However, the tests must be designed to fulfill two criteria. First, learning must be assessed either as a change across several repeated learning trials or sessions, or, in tests involving a single trial, with reference to a condition that controls for nonassociative effects of the training experience. Second, the tests must include some measure of memory (short-term or long-term) in addition to original learning (acquisition). If the tests of learning and memory reveal an effect of the test compound, it may be in the best interest of the sponsor to conduct additional tests to rule out alternative interpretations based on alterations in sensory, motivational, and/or motor capacities. In addition to the above two criteria, it is recommended that the test of learning and memory be chosen on the basis of its demonstrated sensitivity to the class of compound under investigation, if such information is available in the literature. In the absence of such information, examples of tests that could be made to meet the above criteria include: Delayed-matching-to-position, as described for the adult rat (see paragraph (f)(3) of this section) and for the infant rat (see paragraph (f)(9) of this section); olfactory conditioning, as described in paragraph (f)(13) of this section; and acquisition and retention of schedule-controlled behavior (see paragraphs (f)(4) and (f)(5) of this section). Additional tests for weanling rats are described under paragraphs (f)(20) and (f)(12) of this section, and for adult rats under paragraph (f)(16) of this section.

(vi) *Neuropathology.* Neuropathological evaluation must be conducted on animals on postnatal day 11 and at the termination of the study. At 11 days of age, one male or female pup must be removed from each litter such that equal numbers of male and female offspring are removed from all litters combined. Of these, six male and six female pups per dose group will be sacrificed for neuropathological analysis. The pups will be sacrificed by exposure to carbon dioxide and immediately thereafter the brains should be removed, weighed, and immersion-fixed in an appropriate aldehyde fixative. The remaining animals will be sacrificed in a similar manner and immediately thereafter their brains removed and weighed. At the termination of the study, one male or one female from each litter will be sacrificed by exposure to carbon dioxide and immediately thereafter the brain must be removed and weighed. In addition, six animals per sex per dose group (one male or female per litter) must be sacrificed at the termination of the study for neuropathological evaluation. Neuropathological analysis of animals sacrificed at the termination of the study must be performed in accordance with § 799.9620. Neuropathological evaluation of animals sacrificed on postnatal day 11 and at termination of the study must include a qualitative analysis and semiquantitative analysis as well as simple morphometrics.

(A) *Fixation and processing of tissue samples for postnatal day 11 animals.* Immediately following removal, the brain must be weighed and immersion fixed in an appropriate aldehyde fixative. The brains must be postfixed and processed according to standardized published histological protocols such as those discussed in references listed under paragraphs (f)(6), (f)(14), (f)(17), and (f)(21) of this section. Paraffin embedding is acceptable but plastic embedding is preferred and recommended. Tissue blocks and slides must be appropriately identified when stored. Histological sections must be stained for hematoxylin and eosin, or a similar stain according to standard published protocols such as those discussed in references listed under paragraphs (f)(2), (f)(18), and (f)(23) of this section. For

animals sacrificed at the termination of the study, methods for fixation and processing of tissue samples are provided in § 799.9620(e)(7)(iv)(A).

(B) *Qualitative analysis.* The purposes of the qualitative examination are threefold—to identify regions within the nervous system exhibiting evidence of neuropathological alterations, to identify types of neuropathological alterations resulting from exposure to the test substance, and to determine the range of severity of the neuropathological alterations. Representative histological sections from the tissue samples should be examined microscopically by an appropriately trained pathologist for evidence of neuropathological alterations. The following stepwise procedure is recommended for the qualitative analysis. First, sections from the high dose group are compared with those of the control group. If no evidence of neuropathological alterations is found in animals of the high dose group, no further analysis is required. If evidence of neuropathological alterations are found in the high dose group, then animals from the intermediate and low dose group are examined. Subject to professional judgment and the kind of neuropathological alterations observed, it is recommended that additional methods such as Bodian's or Bielchowsky's silver methods and/or immunohistochemistry for glial fibrillary acid protein be used in conjunction with more standard stains to determine the lowest dose level at which neuropathological alterations are observed. Evaluations of postnatal day 11 pups is described in paragraphs (d)(7)(vi)(B)(*1*) and (d)(7)(vi)(B)(*2*) of this section. For animals sacrificed at the termination of the study, the regions to be examined and the types of alterations that must be assessed are identified in § 799.9620(e)(7)(iv)(B).

(*1*) *Regions to be examined.* The brains should be examined for any evidence of treatment-related neuropathological alterations and adequate samples should be taken from all major brain regions (e.g., olfactory bulbs, cerebral cortex, hippocampus, basal ganglia, thalamus, hypothalamus, midbrain (tectum, tegmentum, and cerebral peduncles), brainstem and cerebellum) to ensure a thorough examination.

(*2*) *Types of alterations.* Guidance for neuropathological examination for indications of developmental insult to the brain can be found in paragraphs (f)(8) and (f)(22) of this section. In addition to more typical kinds of cellular alterations (e.g., neuronal vacuolation, degeneration, necrosis) and tissue changes (e.g., astrocytic proliferation, leukocytic infiltration, and cystic formation) particular emphasis should be paid to structural changes indicative of developmental insult including but not restricted to:

(*i*) Gross changes in the size or shape of brain regions such as alterations in the size of the cerebral hemispheres or the normal pattern of foliation of the cerebellum.

(*ii*) The death of neuronal precursors, abnormal proliferation, or abnormal migration, as indicated by pyknotic cells or ectopic neurons, or gross alterations in regions with active proliferative and migratory zones, alterations in transient developmental structures (e.g., the external germinal zone of the cerebellum, see paragraph (f)(15) of this section).

(*iii*) Abnormal differentiation, while more apparent with special stains, may also be indicated by shrunken and malformed cell bodies.

(*iv*) Evidence of hydrocephalus, in particular enlargement of the ventricles, stenosis of the cerebral aqueduct and general thinning of the cerebral hemispheres.

(C) *Subjective diagnosis.* If any evidence of neuropathological alterations is found in the qualitative examination, then a subjective diagnosis will be performed for the purpose of evaluating dose-response relationships. All regions of the brain exhibiting any evidence of neuropathological changes must be included in this analysis. Sections of each region from all dose groups will be coded as to treatment and examined in randomized order. The frequency of each type and the severity of each lesion will be recorded. After all sections from all dose groups including all regions have been rated, the code will be broken and statistical analyses performed to evaluate dose-response relationships. For each type of dose related

lesion observed, examples of different ranges of severity must be described. The examples will serve to illustrate a rating scale, such as 1+, 2+, and 3+ for the degree of severity ranging from very slight to very extensive.

(D) *Simple morphometric analysis.* Since the disruption of developmental processes is sometimes more clearly reflected in the rate or extent of growth of particular brain regions, some form of morphometric analysis must be performed on postnatal day 11 and at the termination of the study to assess the structural development of the brain. At a minimum, this would consist of a reliable estimate of the thickness of major layers at representative locations within the neocortex, hippocampus, and cerebellum. For guidance on such measurements see Rodier and Gramann under paragraph (f)(19) of this section.

(e) *Data collection, reporting, and evaluation.* The following specific information must be reported:

(1) *Description of test system and test methods.* A description of the general design of the experiment should be provided. This must include:

(i) A detailed description of the procedures used to standardize observations and procedures as well as operational definitions for scoring observations.

(ii) Positive control data from the laboratory performing the test that demonstrate the sensitivity of the procedures being used. These data do not have to be from studies using prenatal exposures. However, the laboratory must demonstrate competence in evaluation of effects in neonatal animals perinatally exposed to chemicals and establish test norms for the appropriate age group.

(iii) Procedures for calibrating and ensuring the equivalence of devices and the balancing of treatment groups in testing procedures.

(iv) A short justification explaining any decisions involving professional judgement.

(2) *Results.* The following information must be arranged by each treatment and control group:

(i) In tabular form, data for each animal must be provided showing:

(A) Its identification number and the litter from which it came.

(B) Its body weight and score on each developmental landmark at each observation time.

(C) Total session activity counts and intrasession subtotals on each day measured.

(D) Auditory startle response amplitude per session and intrasession amplitudes on each day measured.

(E) Appropriate data for each repeated trial (or session) showing acquisition and retention scores on the tests of learning and memory on each day measured.

(F) Time and cause of death (if appropriate); any neurological signs observed; a list of structures examined as well as the locations, nature, frequency, and extent of lesions; and brain weights.

(ii) The following data should also be provided, as appropriate:

(A) Inclusion of photomicrographs demonstrating typical examples of the type and extent of the neuropathological alterations observed is recommended.

(B) Any diagnoses derived from neurological signs and lesions, including naturally occurring diseases or conditions, should also be recorded.

(iii) Summary data for each treatment and control group must include:

(A) The number of animals at the start of the test.

(B) The body weight of the dams during gestation and lactation.

(C) Litter size and mean weight at birth.

(D) The number of animals showing each abnormal sign at each observation time.

(E) The percentage of animals showing each abnormal sign at each observation time.

(F) The mean and standard deviation for each continuous endpoint at each observation time. These will include body weight, motor activity counts, auditory startle responses, performance in learning and memory tests, regional brain weights and whole brain weights (both absolute and relative).

(G) The number of animals in which any lesion was found.

(H) The number of animals affected by each different type of lesion, the location, frequency and average grade of each type of lesion for each animal.

(I) The values of all morphometric measurements made for each animal listed by treatment group.

(3) *Evaluation of data.* An evaluation of test results must be made. The evaluation must include the relationship between the doses of the test substance and the presence or absence, incidence, and extent of any neurotoxic effect. The evaluation must include appropriate statistical analyses. The choice of analyses must consider tests appropriate to the experimental design and needed adjustments for multiple comparisons. The evaluation must include the relationship, if any, between observed neuropathological and behavioral alterations.

(f) *References.* For additional background information on this test guideline, the following references should be consulted. These references are available for inspection at the TSCA Nonconfidential Information Center, Rm. NE-B607, Environmental Protection Agency, 401 M St., SW., Washington, DC, 12 noon to 4 p.m., Monday through Friday, except legal holidays.

(1) Adams, J., Buelke-Sam, J., Kimmel, C.A., Nelson, C.J., Reiter, L.W., Sobotka, T.J., Tilson, H.A., and Nelson, B.K. Collaborative behavioral teratolgy study: Protocol design and testing procedures.*Neurobehavioral Toxicology and Teratology* 7:579–586 (1985).

(2) Bennett, H.S., Wyrick, A.D., Lee, S.W., and McNeil, J.H. Science and art in preparing tissues embedded in plastic for light microscopy, with special reference to glycol methacrylate, glass knives and simple stains. *Stain Technology* 51:71–97 (1976).

(3) Bushnell, P.J. Effects of delay, intertrial interval, delay behavior and trimethyltin on spatial delayed response in rats. *Neurotoxicology and Teratology* 10:237–244 (1988).

(4) Campbell, B.A. and Haroutunian, V. Effects of age on long-term memory: Retention of fixed interval responding. *Journal of Gerontology* 36:338–341 (1981).

(5) Cory-Slechta, D.A., Weiss, B., and Cox, C. Delayed behavioral toxicity of lead with increasing exposure concentration. *Toxicology and Applied Pharmacology* 71:342–352 (1983).

(6) Di Sant Agnese, P. A. and De Mesy Jensen, K.L. Dibasic staining of large epoxy tissue sections and application to surgical pathology. *American Journal of Clinical Pathology* 81:25–29 (1984).

(7) U.S. Environmental Protection Agency. Neurotoxicity Screening Battery. In: Pesticide Assessment Guidelines, Subdivision F, Addendum 10. EPA 540/09–91–123. NTIS PB 91–154617 (1991).

(8) Friede, R. L. *Developmental Neuropathology*. Springer-Verlag, New York. pp. 1–23, 297–313, 326–351 (1975).

(9) Green, R.J. and Stanton, M.E. Differential ontogeny of working memory and reference memory in the rat. *Behavioral Neuroscience* 103:98–105 (1989).

(10) Ison, J.R. Reflex modification as an objective test for sensory processing following toxicant exposure. *Neurobehavioral Toxicology and Teratology* 6:437–445 (1984).

(11) Korenbrot, C.C., Huhtaniemi, I.T., and Weiner, R.I. Preputial separation as an external sign of pubertal development in the male rat. *Biology of Reproduction* 17:298–303 (1977).

(12) Krasnegor, N.A., Blass, E.M., Hofer, M.A., and Smotherman, W.P. (eds.) *Perinatal Development: A Psychobiological Perspective.* Academic Press, Orlando. pp.11–37, 145–167. (1987).

(13) Kucharski, D. and Spear, N.E. Conditioning of aversion to an odor paired with peripheral shock in the developing rat. *Developmental Psychobiology* 17:465–479 (1984).

(14) Luna, L. G. (editor). *Manual of Histologic Staining Methods of the Armed Forces Institute of Pathology*. (Third Edition). McGraw-Hill, New York. pp. 1–31 (1968).

(15) Miale, I. L. and Sidman, R.L. An autoradiographic analysis of histogenesis in the mouse cerebellum. *Experimental Neurology*. 4:277–296 (1961).

(16) Miller, D.B. and Eckerman, D.A. Learning and memory measures. In: *Neurobehavioral Toxicology,* Z. Annau (ed). Johns Hopkins University Press, Baltimore. pp. 94–149 (1986).

(17) Pender, M.P. A simple method for high resolution light microscopy of nervous tissue. *Journal of Neuroscience Methods.* 15:213–218 (1985).

(18) Ralis, H.M., Beesley, R.A., and Ralis, Z.A. *Techniques in Neurohistology*. Butterworths, London. pp. 57–145 (1973).

(19) Rodier, P.M. and Gramann, W.J. Morphologic effects of interference with cell proliferation in the early fetal period. *Neurobehavioral Toxicology* 1:129–135 (1979).

(20) Spear, N.E. and Campbell, B.A. (eds.) *Ontogeny of Learning and Memory*. Erlbaum, New Jersey. pp. 101–133, 157–224 (1979).

(21) Spencer, P.S., Bischoff, M.C., and Schaumburg, H.H. Neuropathological methods for the detection of neurotoxic disease. In: *Experimental and Clinical Neurotoxicology. Spencer, P.S. and Schaumburg, H.H. (eds.)*. Williams and Wilkins, Baltimore. pp. 743–757 (1980).

(22) Suzuki, K. Special vulnerabilities of the developing nervous system to toxic substances. In: *Experimental and Clinical Neurotoxicology*. Spencer, P.S. and Schaumburg, H.H. (eds.). Williams and Wilkins, Baltimore. pp. 48–61 (1980).

(23) Luna, L.G. (ed.). Manual of Histologic Staining Methods of the Armed Forces Institute of Pathology. (Third Edition). McGraw-Hill, New York. pp. 32–46 (1968).

[65 FR 78811, Dec. 15, 2000]

§ 799.9748 TSCA metabolism and pharmacokinetics

(a) *Scope.* (1) This section is intended to meet the testing requirements under section 4 of the Toxic Substances Control Act (TSCA). (1) Testing of the disposition of a test substance is designed to obtain adequate information on its absorption, distribution, biotransformation, and excretion and to aid in understanding the mechanism of toxicity. Basic pharmacokinetic parameters determined from these studies will also provide information on the potential for accumulation of the test substance in tissues and/or organs and the potential for induction of biotransformation as a result of exposure to the test substance. These data can be used to assess the adequacy and relevance of the extrapolation of animal toxicity data (particularly chronic toxicity and/or carcinogenicity data) to human risk assessment.

(2) Metabolism data can also be used to assist in determining whether animal toxicity studies have adequately addressed any toxicity concerns arising from exposure to plant metabolites, and in the setting of tolerances, if any, for those metabolites in raw agricultural commodities.

(b) *Source.* The source material used in developing this TSCA test guideline is the Office of Prevention, Pesticides and Toxic Substances (OPPTS) harmonized test guideline 870.7485 (August 1998, final guideline). This source is available at the address in paragraph (h) of this section.

(c) *Definitions.* The following definitions apply to this section.

Metabolism (biotransformation) is the sum of the processes by which a foreign chemical is subjected to chemical change by living organisms.

LOEL is the lowest observable effects level.

NOEL is the no observable effects level.

Pharmacokinetics is the quantitation and determination of the time course and dose dependency of the absorption, distribution, biotransformation, and excretion of chemicals.

(d) *Good laboratory practice standards.* The pharmacokinetics and metabolism tests outlined in this guideline must conform to the laboratory practices stipulated in 40 CFR Part 792—Good Laboratory Practice Standards.

(e) *Test Procedures.* Test procedures presented below utilize a tier system to minimize the use of resources and to allow flexibility in the conduct of metabolism studies. The proposed tier system consists of a basic data set (Tier 1) and additional studies (Tier 2). These additional studies may be requested based upon the existing toxicology data base and/or the results of Tier 1 testing which are found to impact upon the risk assessment process. For Tier 1 testing, the oral route will typically be required; however, if the use pattern results in other types of exposure, other routes (dermal and/or inhalation) may be required for initial testing of the disposition of a chemical substance. The registrant should justify the route of exposure to the Agency. Complete descriptions of the test procedures for these other routes of exposure can be found in paragraph (i) of

this section. Except in unusual circumstances, the tiered approach to metabolism testing should apply to all listed routes of exposure.

(1) *Pilot studies.* The use of pilot studies is recommended and encouraged for the selection of experimental conditions for the pharmacokinetics and metabolism studies (mass balance, analytical procedures, dose-finding, excretion of CO_2, etc.).

(2) *Animal selection*—(i) *Species.* The rat must normally be used for testing because it has been used extensively for metabolic and toxicological studies. The use of other or additional species may be required if critical toxicology studies demonstrate evidence of significant toxicity in these species or if metabolism is shown to be more relevant to humans in the test species.

(ii) *Strain.* Adult animals of the strain used or proposed to be used for the determination of adverse health effects associated with the test substance.

(3) *Material to be tested*—(i) *Test substance.* (A) A radiolabeled test substance using ^{14}C should be used for all material balance and metabolite identification aspects of the study. Other radioactive and stable isotopes may be used, particularly if the element is responsible for or is a part of the toxic portion of the compound. If it can be demonstrated that the material balance and metabolite identification requirements can be met using unlabeled test substance, then radiolabeled compound need not be used. If possible, the radiolabel should be located in a core portion of the molecule which is metabolically stable (it is not exchangeable, is not removed metabolically as CO_2, and does not become part of the one-carbon pool of the organism). Labeling of multiple sites of the molecule may be necessary to follow the metabolic fate of the compound.

(B) The label should follow the test compound and/or its major metabolites until excreted. The radiopurity of the radioactive test substance shall be the highest attainable for a particular test substance (ideally it should be greater than 95%) and reasonable effort should be made to identify impurities present at or above 2%. The purity, along with the identity of major impurities which have been identified, shall be reported. For other segments of the study, nonradioactive test substance may be used if it can be demonstrated that the analytical specificity and sensitivity of the method used with nonradioactive test substance is equal to or greater than that which could be obtained with the radiolabeled test substance. The radioactive and nonradioactive test substances shall be analyzed using an appropriate method to establish purity and identity. Additional guidance will be provided in chemical specific test rules to assist in the definition and specifications of test substances composed of mixtures and methods for determination of purity.

(ii) *Administration of test substance.* Test substance should be dissolved or suspended homogeneously in a vehicle usually employed for acute administration. A rationale for the choice of vehicle should be provided. The customary method of administration will be by oral gavage; however, administration by gelatin capsule or as a dietary mixture may be advantageous in specific situations. Verification of the actual dose administered to each animal should be provided.

(4) *Tier testing.* (i) The multiplicity of metabolic parameters that impact the outcome of toxicological evaluations preclude the use of a universal study design for routine toxicological evaluation of a test substance. The usefulness of a particular study design depends upon the biological activity of a compound and circumstances of exposure. For these reasons, a tiered system is proposed for evaluation of the metabolism/kinetic properties of a test substance.

(ii) The first tier data set is a definitive study by the appropriate route of exposure conducted in male rats to determine the routes and rate of excretion and to identify excreted metabolites. First tier data will also provide basic information for additional testing (Tier 2) if such testing is considered necessary. In the majority of cases, Tier 1 data are expected to satisfy regulatory requirements for biotransformation and pharmacokinetic data on test chemicals.

(iii) Second tier testing describes a variety of metabolism/kinetic experiments which address specific questions based on the existing toxicology data base and/or those results of Tier 1 testing impacting significantly on the risk assessment process. For conduct of these studies, individualized protocols may be necessary. Protocols for these studies, if required, can be developed as a cooperative effort between Agency and industry scientists.

(f) *Tier 1 data requirements (minimum data set).* At this initial level of testing, biotransformation and pharmacokinetic data from a single low dose group will be required. This study will determine the rate and routes of excretion and the type of metabolites generated.

(1) *Number and sex of animals.* A minimum of four male young adult animals must be used for Tier 1 testing. The use of both sexes may be required in cases where there is evidence to support significant sex-related differences in toxicity.

(2) *Dose selection.* (i) A single dose is required for each route of exposure. The dose should be nontoxic, but high enough to allow for metabolite identification in excreta. If no other toxicity data are available for selection of the low dose, a dose identified as a fraction of the LD_{50} (as determined from acute toxicity studies) may be used. The magnitude of the dose used in Tier 1 studies should be justified in the final report.

(ii) For test substances of low toxicity a maximum dose of 1,000 mg/kg should be used; chemical-specific considerations may necessitate a higher maximum dose and will be addressed in specific test rules.

(3) *Measurements*—(i) *Excretion.* (A) Data obtained from this section (percent recovery of administered dose from urine, feces, and expired air) will be used to determine the rate and extent of excretion of test chemical, to assist in establishing mass balance, and will be used in conjunction with pharmacokinetic parameters to determine the extent of absorption. The quantities of radioactivity eliminated in the urine, feces, and expired air shall be determined separately at appropriate time intervals.

(B) If a pilot study has shown that no significant amount of radioactivity is excreted in expired air, then expired air need not be collected in the definitive study.

(C) Each animal must be placed in a separate metabolic unit for collection of excreta (urine, feces and expired air). At the end of each collection period, the metabolic units must be rinsed with appropriate solvent to ensure maximum recovery of radiolabel. Excreta collection must be terminated at 7 days, or after at least 90% of the administered dose has been recovered, whichever occurs first. The total quantities of radioactivity in urine must be determined at 6, 12, and 24 hours on day 1 of collection, and daily thereafter until study termination, unless pilot studies suggest alternate or additional time points for collection. The total quantities of radioactivity in feces should be determined on a daily basis beginning at 24 hours post-dose, and daily thereafter until study termination. The collection of CO_2 and other volatile materials may be discontinued when less than 1% of the administered dose is found in the exhaled air during a 24-hour collection period.

(ii) *Tissue distribution.* At the termination of the Tier 1 study, the following tissues should be collected and stored frozen: Liver, fat, gastrointestinal tract, kidney, spleen, whole blood, and residual carcass. If it is determined that a significant amount of the administered dose is unaccounted for in the excreta, then data on the percent of the total (free and bound) radioactive dose in these tissues as well as residual carcass will be requested. Additional tissues must be included if there is evidence of target organ toxicity from subchronic or chronic toxicity studies. For other routes of exposure, specific tissues may also be required, such as lungs in inhalation studies and skin in dermal studies. Certain techniques currently at various stages of development, e.g., quantitative whole-body autoradiography, may prove useful in determining if a test substance concentrates in certain organs or in determining a specific pattern of distribution within a given tissue. The use of such techniques is encouraged, but not

required, and may be employed to limit the number of tissues collected to those shown to contain a measurable amount of radioactivity.

(iii) *Metabolism.* Excreta must be collected for identification and quantitation of unchanged test substance and metabolites as described in paragraph (f)(3)(i) of this section. Pooling of excreta to facilitate metabolite identification within a given dose group is acceptable. Profiling of metabolites from each time period is recommended. However, if lack of sample and/or radioactivity precludes this, pooling of urine as well as pooling of feces across several time points is acceptable. Appropriate qualitative and quantitative methods must be used to assay urine, feces, and expired air from treated animals. Reasonable efforts should be made to identify all metabolites present at 5% or greater of the administered dose and to provide a metabolic scheme for the test chemical. Compounds which have been characterized in excreta as comprising 5% or greater of the administered dose should be identified. If identification at this level is not possible, a justification/explanation should be provided in the final report. Identification of metabolites representing less than 5% of the administered dose might be requested if such data are needed for risk assessment of the test chemical. Structural confirmation should be provided whenever possible. Validation of the methods used in metabolite identification should be included.

(g) *Tier 2 data requirements.* Studies at the Tier 2 level are designed to answer questions about the disposition of test chemicals based on the existing toxicology data base and/or results of Tier 1 testing which may have a significant impact on the risk assessment for the test chemical. Such studies may address questions regarding absorption, persistence, or distribution of the test chemical, or a definitive alteration in the metabolic profile occurring with dose which may be of toxicological concern. At the Tier 2 level, only those studies which address a specific concern are required, and if required must be conducted according to mutual agreement between the registrant and the Agency. Flexibility will be allowed in the design of specific experiments as warranted by technological advances in this field.

(1) *Absorption.* (i) If the extent of absorption cannot be established from Tier 1 studies, or where greater than 20% of the administered dose is present in feces, a study to determine the extent of absorption will be required. This can be accomplished either through intravenous administration of test material and measurement of radioactivity in excreta or after oral administration of test material and measurement of radioactivity in bile.

(ii) For the intravenous study, a single dose (not to exceed the oral dose used in Tier 1) of test chemical using an appropriate vehicle should be administered in a suitable volume (e.g., 1 mL/kg) at a suitable site to at least three male rats (both sexes might be used if warranted). The disposition of the test chemical should be monitored for oral dosing as outlined in paragraph (f)(3)(i) of this section. Metabolite identification will not be required for this study.

(iii) If a biliary excretion study is chosen the oral route of administration may be requested. In this study, the bile ducts of at least three male rats (or of both sexes, if warranted) should be appropriately cannulated and a single dose of the test chemical should be administered to these rats. Following administration of the test chemical, excretion of radioactivity in bile should be monitored as long as necessary to determine if a significant percentage of the administered dose is excreted via this route.

(2) *Tissue distribution time course.* (i) A time course of tissue distribution in selected tissues may be required to aid in the determination of a possible mode of toxic action. This concern may arise from evidence of extended half-life or possible accumulation of radioactivity in specific tissues. The selection of tissues for this type of study will be based upon available evidence of target organ toxicity and/or carcinogenicity, and the number of time points required will be based upon pharmacokinetic information obtained from Tier 1 data. Flexibility will be allowed in the selection of time points to be studied.

(ii) For this type of study, three rats per time point will be administered an appropriate oral dose of test chemical, and the time course of distribution monitored in selected tissues. Only one sex may be required, unless target organ toxicity is observed in sex-specific organs. Assessment of tissue distribution will be made using appropriate techniques for assessment of total amount distributed to tissue and for assessment of metabolite distribution.

(3) *Plasma kinetics.* The purpose of this experiment is to obtain estimates of basic pharmacokinetic parameters (half-life, volume of distribution, absorption rate constant, area under the curve) for the test substance. Kinetic data may be required if the data can be used to resolve issues about bioavailability and to clarify whether clearance is saturated in a dose-dependent fashion. For this experiment a minimum of three rats per group is required. At least two doses will be required, usually the NOEL and LOEL from the critical toxicology study. Following administration of test substance, samples should be obtained from each animal at suitable time points appropriate sampling methodology. Total radioactivity present (or total amount of chemical, for nonradioactive materials) should be analyzed in whole blood and plasma using appropriate methods, and the blood/plasma ratio should be calculated.

(4) *Induction.* (i) Studies addressing possible induction of biotransformation may be requested under one or more of the following conditions:

(A) Available evidence indicates a relationship between induced metabolism and enhanced toxicity.

(B) The available toxicity data indicate a nonlinear relationship between dose and metabolism.

(C) The results of Tier 1 metabolite identification studies show identification of a potentially toxic metabolite.

(D) Induction can plausibly be invoked as a factor in such effects where status may depend on the level of inducible enzymes present. Several *in vivo* and *in vitro* methods are available for assessment of enzyme induction, and the experiments which best address the issue at hand can be determined between Agency and industry scientists. If induction is demonstrated, the relationship of this phenomenon to toxicity observed from subchronic and/or chronic toxicity studies will need to be addressed.

(ii) [Reserved]

(iii) If toxicologically significant alterations in the metabolic profile of the test chemical are observed through either *in vitro* or *in vivo* experiments, characterization of the enzyme(s) involved (for example, Phase I enzymes such as isozymes of the Cytochrome P450–dependent mono-oxygenase system, Phase II enzymes such as isozymes of sulfotransferase or uridine diphosphate glucuronosyl transferase, or any other relevant enzymes) may be requested. This information will help establish the relevance of the involved enzyme(s) to human risk, as it is known that certain isozymes are present in animal species which are not present in humans, and vice versa.

(5) *Physiologically-based modeling.* Traditional methods of modeling have been used to determine kinetic parameters associated with drug and xenobiotic disposition, but have assumed a purely mathematical construct of mammalian organisms in their operation. On the other hand, more recent models which take into account the physiological processes of the animal have been used with success in defining biological determinants of chemical disposition as well as the relationship between tissue dose and tissue response. These so-called physiologically-based models, also allow for cross-species extrapolation which is often necessary in the risk-assessment process. The use of physiologically-based modeling as an experimental tool for addressing specific issues related to biotransformation and pharmacokinetics of a test substance is encouraged. Information as derived from physiologically-based modeling experiments may aid in the comparison of biotransformation and pharmacokinetics of a test substance between animal species and humans, and in the assessment of risk under specific exposure conditions. At the discretion of the Agency, or by mutual agreement,

results of physiologically based pharmacokinetic (PBPK) studies with parent compound may be submitted in lieu of other studies, if it is determined that such data would provide adequate information to satisfy this guideline.

(h) *Reporting of study results.* In addition to the reporting requirements specified under EPA Good Laboratory Practice Standards at 40 CFR part 792, subpart J, the completed study (Tier 1 or Tier 2) should be presented in the following format:

(1) *Title/cover page.* Title page and additional requirements (requirements for data submission, good laboratory practice, statements of data confidentiality claims and quality assurance) if relevant to the study report, should precede the content of the study formatted below. These requirements are to be found in 40 CFR parts 790, 792, and 799.

(2) *Table of contents.* A concise listing must precede the body of the report, containing all essential elements of the study and the page and table number where the element is located in the final report of the study. Essential elements of the table of contents should include a summary, an introduction, the materials and methods section, results, discussion/conclusions, references, tables, figures, appendices, and key subsections as deemed appropriate. The table of contents should include the page number of each of these elements.

(3) *Body of the report.* The body of the report must include information required under this section, organized into sections and paragraphs as follows:

(i) *Summary.* This section of the study report must contain a summary and analysis of the test results and a statement of the conclusions drawn from the analysis. This section should highlight the nature and magnitude of metabolites, tissue residue, rate of clearance, bioaccumulation potential, sex differences, etc. The summary should be presented in sufficient detail to permit independent evaluation of the findings.

(ii) *Introduction.* This section of the report should include the objectives of the study, guideline references, regulatory history, if any, and a rationale.

(iii) *Materials and methods.* This section of the report must include detailed descriptions of all elements including:

(A) *Test substance.* (*1*) This section should include identification of the test substance—chemical name, molecular structure, qualitative and quantitative determination of its chemical composition, and type and quantities of any impurities whenever possible.

(*2*) This section should also include information on physical properties including physical state, color, gross solubility and/or partition coefficient, and stability.

(*3*) The type or description of any vehicle, diluents, suspending agents, and emulsifiers or other materials used in administering the test substance should be stated.

(*4*) If the test substance is radiolabeled, information on the following should be included in this subsection: The type of radionuclide, position of label, specific activity, and radiopurity.

(B) *Test animals.* This section should include information on the test animals, including: Species, strain, age at study initiation, sex, body weight, health status, and animal husbandry.

(C) *Methods.* This subsection should include details of the study design and methodology used. It should include a description of:

(*1*) How the dosing solution was prepared and the type of solvent, if any, used.

(*2*) Number of treatment groups and number of animals per group.

(*3*) Dosage levels and volume.

(*4*) Route of administration.

(*5*) Frequency of dosing.

(*6*) Fasting period (if used).

(*7*) Total radioactivity per animal.

(*8*) Animal handling.

(*9*) Sample collection.

(*10*) Sample handling.

(*11*) Analytical methods used for separation.

(*12*) Quantitation and identification of metabolites.

(*13*) Other experimental measurements and procedures employed (including validation of test methods for metabolite analysis).

(D) *Statistical analysis.* If statistical analysis is used to analyze the study findings, then sufficient information on

the method of analysis and the computer program employed should be included so that an independent reviewer/statistician can reevaluate and reconstruct the analysis. Presentation of models should include a full description of the model to allow independent reconstruction and validation of the model.

(iv) *Results.* All data should be summarized and tabulated with appropriate statistical evaluation and placed in the text of this section. Radioactivity counting data should be summarized and presented as appropriate for the study, typically as disintegrations per minute and microgram or milligram equivalents, although other units may be used. Graphic illustrations of the findings, reproduction of representative chromatographic and spectrometric data, and proposed metabolic pathways and molecular structure of metabolites should be included in this section. In addition the following information is to be included in this section if applicable:

(A) Justification for modification of exposure conditions, if applicable.

(B) Justification for selection of dose levels for pharmacokinetic and metabolism studies.

(C) Description of pilot studies used in the experimental design of the pharmacokinetic and metabolism studies, if applicable.

(D) Quantity and percent recovery of radioactivity in urine, feces, and expired air, as appropriate. For dermal studies, include recovery data for treated skin, skin washes, and residual radioactivity in the covering apparatus and metabolic unit as well as results of the dermal washing study.

(E) Tissue distribution reported as percent of administered dose and microgram equivalents per gram of tissue.

(F) Material balance developed from each study involving the assay of body tissues and excreta.

(G) Plasma levels and pharmacokinetic parameters after administration by the relevant routes of exposure.

(H) Rate and extent of absorption of the test substance after administration by the relevant routes of exposure.

(I) Quantities of the test substance and metabolites (reported as percent of the administered dose) collected in excreta.

(J) Individual animal data.

(v) *Discussion and conclusions.* (A) In this section the author(s) should:

(*1*) Provide a plausible explanation of the metabolic pathway for the test chemical.

(*2*) Emphasize species and sex differences whenever possible.

(*3*) Discuss the nature and magnitude of metabolites, rates of clearance, bioaccumulation potential, and level of tissue residues as appropriate.

(B) The author(s) should be able to derive a concise conclusion that can be supported by the findings of the study.

(vi) *Optional sections.* The authors may include additional sections such as appendices, bibliography, tables, etc.

(i) *Alternate routes of exposure for Tier 1 testing*—(1) *Dermal*—(i) *Dermal treatment.* One (or more if needed) dose levels of the test substance must be used in the dermal portion of the study. The low dose level should be selected in accordance with paragraph (f)(2) of this section. The dermal doses must be dissolved, if necessary, in a suitable vehicle and applied in a volume adequate to deliver the doses. Shortly before testing, fur is to be clipped from the dorsal area of the trunk of the test animals. Shaving may be employed, but it should be carried out approximately 24 hour before the test. When clipping or shaving the fur, care should be taken to avoid abrading the skin, which could alter its permeability. Approximately 10% of the body surface should be cleared for application of the test substance. With highly toxic substances, the surface area covered may be less than approximately 10%, but as much of the area as possible is to be covered with a thin and uniform film. The same nominal treatment surface area must be used for all dermal test groups. The dosed areas are to be protected with a suitable covering which is secured in place. The animals must be housed separately.

(ii) *Dermal washing study.* (A) A washing experiment must be conducted to assess the removal of the applied dose of the test substance by washing the treated skin area with a mild soap and water. A single dose must be applied to

two animals in accordance with paragraph (f)(2) of this section. After application (2 to 5 minutes) the treated areas of the animals must be washed with a mild soap and water. The amounts of test substance recovered in the washes must be determined to assess the effectiveness of removal by washing.

(B) Unless precluded by corrosiveness, the test substance must be applied and kept on the skin for a minimum of 6 hours. At the time of removal of the covering, the treated area must be washed following the procedure as outlined in the dermal washing study. Both the covering and the washes must be analyzed for residual test substance. At the termination of the studies, each animal must be sacrificed and the treated skin removed. An appropriate section of treated skin must be analyzed to determine residual radioactivity.

(2) *Inhalation.* A single (or more if needed) concentration of test substance must be used in this portion of the study. The concentration should be selected in accordance with paragraph (f)(2) of this section. Inhalation treatments are to be conducted using a ''nose-cone'' or ''head-only'' apparatus to prevent absorption by alternate routes of exposure. If other inhalation exposure conditions are proposed for use in a chemical-specific test rule, justification for the modification must be documented. A single exposure over a defined period must be used for each group—a typical exposure is 4–6 hours.

[65 FR 78815, Dec. 15, 2000]

§ 799.9780 TSCA immunotoxicity.

(a) *Scope.* This section is intended to meet the testing requirements under section 4 of TSCA. This section is intended to provide information on suppression of the immune system which might occur as a result of repeated exposure to a test chemical. While some information on potential immunotoxic effects may be obtained from hematology, lymphoid organ weights and histopathology (usually done as part of routine toxicity testing), there are data which demonstrate that these endpoints alone are not sufficient to predict immunotoxicity (Luster *et al.*, 1992, 1993 see paragraphs (j)(8) and (j)(9) of this section). Therefore, the tests described in this section are intended to be used along with data from routine toxicity testing, to provide more accurate information on risk to the immune system. The tests in this section do not represent a comprehensive assessment of immune function.

(b) *Source.* The source material used in developing this TSCA test guideline is the OPPTS harmonized test guideline 870.7800 (June 1996 Public Draft). This source is available at the address in paragraph (j) of this section.

(c) *Definitions.* The following definitions apply to this section.

Antibodies or immunoglobulins (Ig) are part of a large family of glycoprotein molecules. They are produced by B cells in response to antigens, and bind specifically to the eliciting antigen. The different classes of immunoglobulins involved in immunity are IgG, IgA, IgM, IgD, and IgE. Antibodies are found in extracellular fluids, such as serum, saliva, milk, and lymph. Most antibody responses are T cell-dependent, that is, functional T and B lymphocytes, as well as antigen-presenting cells (usually macrophages), are required for the production of antibodies.

Cluster of differentiation (CD) refers to molecules expressed on the cell surface. These molecules are useful as distinct CD molecules are found on different populations of cells of the immune system. Antibodies against these cell surface markers (e.g., CD4, CD8) are used to identify and quantitate different cell populations.

Immunotoxicity refers to the ability of a test substance to suppress immune responses that could enhance the risk of infectious or neoplastic disease, or to induce inappropriate stimulation of the immune system, thus contributing to allergic or autoimmune disease. This section only addresses potential immune suppression.

Natural Killer (NK) cells are large granular lymphocytes which non-specifically lyse cells bearing tumor or viral antigens. NK cells are up-regulated soon after infection by certain microorganisms, and are thought to represent the first line of defense against viruses and tumors.

T and B cells are lymphocytes which are activated in response to specific antigens (foreign substances, usually proteins). B cells produce antigen-specific antibodies (see the definition for ''antibodies or immunoglobulins''), and subpopulations of T cells are frequently needed to provide help for the antibody response. Other types of T cell participate in the direct destruction of cells expressing specific foreign (tumor or infectious agent) antigens on the cell surface.

(d) *Principles of the test methods.* (1) In order to obtain data on the functional responsiveness of major components of the immune system to a T cell dependent antigen, sheep red blood cells (SRBC), rats and/or mice[1] shall be exposed to the test and control substances for at least 28 days.[2] The animals shall be immunized by intravenous or intraperitoneal injection of SRBCs approximately 4 days (depending on the strain of animal) prior to the end of the exposure. At the end of the exposure period, either the plaque forming cell (PFC) assay or an enzyme linked immunosorbent assay (ELISA) shall be performed to determine the effects of the test substance on the splenic anti-SRBC (IgM) response or serum anti-SRBC IgM levels, respectively.

(2) In the event the test substance produces significant suppression of the anti-SRBC response, expression of phenotypic markers for major lymphocyte populations (total T and total B), and T cell subpopulations (T helpers (CD^4) and T cytotoxic/suppressors (CD^8)), as assessed by flow cytometry, may be performed to determine the effects of the test substance on either splenic or peripheral-blood lymphocyte populations and T cell subpopulations. When this study is performed, the appropriate monoclonal antibodies for the species being tested should be used. If the test substance has no significant effect on the anti-SRBC assay, a functional test for NK cells may be performed to test for a chemical's effect on non-specific immunity.[3] For tests performed using cells or sera from blood (ELISA or flow cytometry), it is not necessary to destroy the animals, since immunization with SRBCs at 28 days is not expected to markedly affect the results of other assays included in subchronic or longer-term studies (these tests are discussed in the reference under paragraph (j)(7) of this section). The necessity to perform either a quantitative analysis of the effects of a chemical on the numbers of cells in major lymphocyte populations and T Cell subpopulations by flow cytometry, or a splenic NK cell activity assay to assess the effects of the test compound on non-specific immunity shall be determined on a case-by-case basis, depending upon the outcome of the anti-SRBC assay.

(e) *Limit test.* If a test at one dose level of at least 1,000 mg/kg body weight (or 2 mg/L for inhalation route of exposure) using the procedures described for this study produces no observable toxic effects or if toxic effects would not be expected based upon data of structurally related compounds, then a full study using three dose levels might not be necessary. Expected human exposure may indicate the need for a higher dose level.

(f) *Test procedures*—(1) *Animal selection*—(i) *Species and strain.* These tests are intended for use in rats and/or mice. Commonly used laboratory strains shall be employed.[4] All test animals shall be free of pathogens, internal and external parasites. Females shall be nulliparous and nonpregnant. The species, strain, and source of the animals shall be identified.

---

[1] If absorption/distribution/metabolism/excretion (ADME) data are similar between species, then either rats or mice may be used for the test compound in question. If such data are lacking, both species should be used.

[2] Because there is a fairly rapid turnover of many of the cells in the immune system, 28 days is considered sufficient for the purposes of the anti-SRBC tests.

[3] When these optional tests are included, the phenotypic or NK cell analyses may be performed at 28 days of exposure, or at a later timepoint if ADME data suggest that a longer exposure is more appropriate.

[4] The study director shall be aware of strain differences in response to SRBC. For example, if the $B_6C_3F_1$ hybrid mouse is used in the PFC assay, a response of 800–1,000 PFC/10^6 spleen cells in control mice should be the minimally acceptable PFC response.

(ii) *Age/weight.* (A) Young, healthy animals shall be employed. At the commencement of the study, the weight variation of the animals used shall not exceed ±20% of the mean weight for each sex.

(B) Dosing shall begin when the test animals are between 6 and 8 weeks old.

(iii) *Sex.* Either sex may be used in the study; if one sex is known or believed to be more sensitive to the test compound, then that sex shall be used.

(iv) *Numbers.* (A) At least eight animals shall be included in each dose and control group. The number of animals tested shall yield sufficient statistical power to detect a 20% change based upon the interanimal variation which may be encountered in these assays.

(B) To avoid bias, the use of adequate randomization procedures for the proper allocation of animals to test and control groups is required.

(C) Each animal shall be assigned a unique identification number. Dead animals, their preserved organs and tissues, and microscopic slides shall be identified by reference to the animal's unique number.

(v) *Husbandry.* (A) Animals may be group-caged by sex, but the number of animals per cage shall not interfere with clear observation of each animal. The biological properties of the test substance or toxic effects (e.g., morbidity, excitability) may indicate a need for individual caging.

(B) The temperature of the experimental animal rooms shall be at 22 ±3 °C.

(C) The relative humidity of the experimental animal rooms shall be between 30 and 70%.

(D) Where lighting is artificial, the sequence shall be 12 hrs light, 12 hrs dark.

(E) Control and test animals shall be maintained on the same type of bedding and receive feed from the same lot. The feed shall be analyzed to assure adequacy of nutritional requirements of the species tested and for impurities that might influence the outcome of the test. Rodents shall be fed and watered *ad libitum* with food replaced at least weekly.

(F) The study shall not be initiated until the animals have been allowed an adequate period of acclimatization or quarantine to environmental conditions. The period of acclimatization shall be at least 1 week in duration.

(2) *Control and test substances.* (i) The test substance shall be dissolved or suspended in a suitable vehicle. Ideally, if a vehicle or diluent is needed, it shall not elicit toxic effects or substantially alter the chemical or toxicological properties of the test substance. It is recommended that an aqueous solution should be used. If solubility is a problem a solution in oil may be used. Other vehicles may be considered, but only as a last resort.

(ii) One lot of the test substance shall be used, if possible, throughout the duration of the study, and the research sample shall be stored under conditions that maintain its purity and stability. Prior to the initiation of the study, there shall be a characterization of the test substance, including the purity of the test compound and if technically feasible, the name and quantities of any known contaminants and impurities.

(iii) If the test or positive control substance is to be incorporated into feed or another vehicle, the period during which the test substance is stable in such a mixture shall be determined prior to the initiation of the study. Its homogeneity and concentration shall also be determined prior to the initiation of the study and periodically during the study. Statistically randomized samples of the mixture shall be analyzed to ensure that proper mixing, formulation, and storage procedures are being followed, and that the appropriate concentration of the test or control substance is contained in the mixture.

(3) *Control groups.* (i) A concurrent, vehicle-treated control group is required.

(ii) A separate untreated control group is required if the toxicity of the vehicle is unknown.

(iii) A positive control group with a known immunosuppressant (e.g., cyclophosphamide) shall be included in the study. A group of at least eight animals shall be given the immunosuppressive chemical.

(4) *Dose levels.* (i) In repeated-dose toxicity tests, it is desirable to have a

dose-response relationship and a no observed immunotoxic effect level. Therefore, at least three dose levels and a negative control shall be used, unless a limit test is performed as specified under paragraph (e) of this section.

(ii) The highest dose level shall not produce significant stress, malnutrition, or fatalities, but ideally should produce some measurable sign of general toxicity (e.g., a 10% loss of body weight).

(iii) The lowest dose level ideally shall not produce any evidence of immunotoxicity.

(5) *Administration of the test substance.* (i) The test substance, vehicle, or positive control substance shall be administered for at least 28 days for the anti-SRBC assay. The route of administration of the test material will usually be oral; however, this shall be determined by the likely route of occupational or indoor exposure. Therefore, under certain conditions, the dermal or inhalation route of exposure may be more relevant for the study. All animals shall be dosed by the same method during the entire experimental period.

(ii) If the test substance is administered by gavage, the animals are dosed with the test substance ideally on a 7-days-per-week basis. However, based primarily on practical considerations, dosing by gavage on a 5-days-per-week basis shall be acceptable. If the test substance is administered in the drinking water, or mixed directly into the diet, then exposure shall be on a 7-days-per-week basis.

(A) For substances of low toxicity, it is important to ensure that when administered in the diet, the quantities of the test substance involved do not interfere with normal nutrition. When the test substance is administered in the diet, either a constant dietary concentration in parts per million (ppm) or a constant dose level in terms of the animal's body weight shall be used; the alternative used should be specified.

(B) For a substance administered by gavage, the dose shall be given at approximately the same time each day, and adjusted at intervals (weekly for mice, twice per week for rats) to maintain a constant dose level in terms of the animal's body weight.

(iii) If the test substance is administered dermally, use paragraphs (f)(5)(iii)(A) through (f)(5)(iii)(D) of this section.

(A) *Dose levels and dose selection.* (*1*) In this test, it is desirable to determine a dose-response relationship as well as a NOEL. Therefore, at least three dose levels plus a control and, where appropriate, a vehicle control (corresponding to the concentration of vehicle at the highest dose level) group should be used. Doses should be spaced appropriately to produce test groups with a range of toxic effects. The data should be sufficient to produce a dose-response curve.

(*2*) The highest dose level should elicit signs of toxicity but not produce severe skin irritation or an incidence of fatality which would prevent a meaningful evaluation. If application of the test substance produces severe skin irritation, the concentration may be reduced, although this may result in a reduction in, or absence of, other toxic effects at the high dose level. If the skin has been badly damaged early in the study, it may be necessary to terminate the study and undertake a new one at lower concentrations.

(*3*) The intermediate dose levels should be spaced to produce a gradation of toxic effects.

(*4*) The lowest dose level should not produce any evidence of toxic effects.

(B) *Preparation of animal skin.* Shortly before testing, fur should be clipped from not less than 10% of the body surface area for application of the test substance. In order to dose approximately 10% of the body surface, the area starting at the scapulae (shoulders) to the wing of the ileum (hipbone) and half-way down the flank on each side of the animal should be shaved. Shaving should be carried out approximately 24 hrs before dosing. Repeated clipping or shaving is usually needed at approximately weekly intervals. When clipping or shaving the fur, care should be taken to avoid abrading the skin which could alter its permeability.

(C) *Preparation of test substance.* (*1*) Liquid test substances are generally used undiluted, except as indicated in paragraph (f)(5)(iii)(A)(*2*) of this section.

(*2*) Solids should be pulverized when possible. The substance should be moistened sufficiently with water or, when necessary, a suitable vehicle to ensure good contact with the skin. When a vehicle is used, the influence of the vehicle on toxicity of, and penetration of the skin by, the test substance should be taken into account.

(*3*) The volume of application should be kept constant, e.g. less than 300 <greek-m≤L for the rat; different concentrations of test solution should be prepared for different dose levels.

(D) *Administration of test substance.* (*1*) The duration of exposure should be at least for 90 days.

(*2*) The animals should be treated with test substance for at least 6 hrs/day on a 7-day per week basis. However, based on practical considerations, application on a 5-day per week basis is acceptable. Dosing should be conducted at approximately the same time each day.

(*3*) The test substance should be applied uniformly over the treatment site.

(*4*) The surface area covered may be less for highly toxic substances. As much of the area should be covered with as thin and uniform a film as possible.

(*5*) During the exposure period, the test substance should be held in contact with the skin with a porous gauze dressing. The test site should be further covered with nonirritating tape to retain the gauze dressing and the test substance and to ensure that the animals cannot ingest the test substance. Restrainers may be used to prevent the ingestion of the test substance, but complete immobilization is not recommended.

(iv) If the test substance is administered by the inhalation route, use the procedures under paragraphs (e)(2), (e)(3), (e)(6), (e)(8), (e)(9), and (e)(10) of 40 CFR 799.9346. The exposure time for the anti-SRBC test shall be at least 28 days.

(6) *Observation period.* Duration of the observation period shall be at least 28 days.

(7) *Observation of animals.* (i) Observations shall be made at least once each day for morbidity and mortality. Appropriate actions shall be taken to minimize loss of animals to the study (e.g., necropsy of those animals found dead and isolation or euthanasia of weak or moribund animals).

(ii) A careful clinical examination shall be made at least once a week. Observations shall be detailed and carefully recorded, preferably using explicitly defined scales. Observations shall include, but not be limited to: evaluation of skin and fur, eyes and mucous membranes; respiratory and circulatory effects; autonomic effects, such as salivation; central nervous system effects, including tremors and convulsions, changes in the level of motor activity, gait and posture, reactivity to handling or sensory stimuli, grip strength, and stereotypes or bizarre behavior (e.g., self-mutilation, walking backwards).

(iii) Signs of toxicity shall be recorded as they are observed, including the time of onset, degree and duration.

(iv) Food and water consumption shall be determined weekly.

(v) Animals shall be weighed immediately prior to dosing, weekly (twice per week for rats) thereafter, and just prior to euthanasia.

(vi) Any moribund animals shall be removed and euthanized when first noticed. Necropsies shall be conducted on all moribund animals, and on all animals that die during the study.

(vii) The spleen and thymus shall be weighed in all animals at the end of the study.

(g) *Immunotoxicity tests*—(1) *Functional tests.* Either a splenic PFC assay or an ELISA shall be used to determine the response to antigen administration.

(i) *Antibody plaque-forming cell (PFC) assay.* If the antibody PFC assay is performed, the criteria listed under paragraphs (g)(1)(i)(A) through (g)(1)(i)(F) of this section shall be adhered to. Assays described in the references under paragraphs (j)(2) and (j)(4) of this section may be used.

(A) The T cell-dependent antigen, SRBC, shall be injected intravenously or intraperitoneally, usually at 24 days

after the first dosing with the test substance.[5] Although the optimum response time is usually 4 days after immunization, some strains of test animal may deviate from this time point. The strain to be used shall be evaluated for the optimum day for PFC formation after immunization.

(B) The activity of each new batch of complement shall be determined. For any given study, the SRBCs shall be from a single sheep, or pool of sheep, for which the shelf life and dose for optimum response has been determined.

(C) Modifications of the PFC assay described in paragraph (g)(1)(i) of this section exist and may prove useful; however, the complete citation shall be made for the method used, any modifications to the method shall be reported, and the source and, where appropriate, the activity or purity of important reagents shall be given. Justification or rationale shall be provided for each protocol modification. Discussions of modifications of the PFC assay are available in the references under paragraphs (j)(5),(j)(6), and (j)(10) of this section

(D) Samples shall be randomized and shall be coded for PFC analysis, so that the analyst is unaware of the treatment group of each sample examined.

(E) Spleen cell viability shall be determined.

(F) The numbers of IgM PFC per spleen, and the number of IgM PFC per 10^6 spleen cells shall be reported.

(ii) *Immunoglobulin quantification.* As an alternative to a PFC assay, the effects of the test substance on the antibody response to antigen may be determined by an Enzyme-Linked Immunosorbent Assay (ELISA). Comparison between the PFC and ELISA assays for immunotoxicity assessment are discussed in the references under paragraphs (j)(5), (j)(6), and (j)(10) of this section. Test animals shall be immunized with SRBCs as for the PFC assay. IgM titers in the serum of each test animal shall be determined (usually 4 days after immunization). As with the PFC assay, the optimum dose of SRBCs and optimum time for collection of the sera shall be determined for the species and strain of animal to be tested. Several methods are described in the reference under paragraph (j)(11) of this section).

(iii) *Natural killer (NK) cell activity.* The methods described in the reference under paragraph (j)(3) of this section may be used to demonstrate the effects of at least 28 days of exposure to a test substance on spontaneous cytotoxic activity. In this assay, splenocytes from treated and untreated test animals are incubated with ^{51}Cr-labeled YAC-1 lymphoma cells. The amount of radiolabel released from the target cells after incubation with the effector cells for four hrs is used as a measure of NK cytolysis. The following points shall be adhered to when using the NK cell assay:

(A) Assay controls shall be included to account for spontaneous release of radiolabel from target cells in the absence of effector cells, and also for the determination of total release of radiolabel.

(B) Target cells other than YAC-1 lymphoma cells may be appropriate for use in the assay. In all cases, target cell viability shall be determined.

(C) Modifications of the protocol exist that may prove useful. However, complete citation shall be made to the method used. Modifications shall be reported, and where appropriate, the source, activity, and/or purity of the reagents should be given. Justification or rationale shall be provided for each protocol modification.

(2) *Enumeration of splenic or peripheral blood total B cells, total T cells, and T cell subpopulations.* The phenotypic analysis of total B cell, total T cell, and T cell subpopulations from the spleen or peripheral blood by flow cytometry should be performed after at least 28 days of dosing; this may be performed at a later timepoint, if ADME data suggest that a longer exposure is more appropriate. If an exposure period longer than 28 days is used, then these tests may be performed in conjunction with subchronic (ninety day oral, dermal, or inhalation) toxicity studies, when

[5] If the SRBCs are administered by the intraperitoneal route, the study director should be aware that a low percentage of animals may not respond because the antigen was accidentally injected into the intestinal tract.

these studies are required. Methods described in the references under paragraphs (j)(1) and (j)(5) of this section may be used.

(h) *Data and reporting*—(1) *Treatment of results*—(i) Data shall be summarized in tabular form, showing for each test group the number of animals at the start of the test, the number of animals showing effects, the types of effects and the percentage of animals displaying each type of effect.

(ii) All observed results, quantitative and incidental, shall be evaluated by an appropriate statistical method. Any generally accepted statistical methods may be used; the statistical methods including significance criteria shall be selected during the design of the study.

(2) *Evaluation of study results.* The findings of an immunotoxicity study shall be evaluated in conjunction with the findings of preceding studies and considered in terms of other toxic effects. The evaluation shall include the relationship between the dose of the test substance and the presence or absence, and the incidence and severity of abnormalities, including behavioral and clinical abnormalities, gross lesions, identified target organs, body weight changes, effects on mortality and any other general or specific toxic effects. A properly conducted test shall provide a satisfactory estimation of a no-observed-effect level. It may indicate the need for an additional study and provide information on the selection of dose levels.

(3) *Test report.* In addition to the reporting requirements as specified under 40 CFR part 792, subpart J, the following specific information shall be reported. Both individual and summary data should be presented.

(i) The test substance characterization shall include:

(A) Chemical identification.

(B) Lot or batch number.

(C) Physical properties.

(D) Purity/impurities.

(E) Identification and composition of any vehicle used.

(ii) The test system shall contain data on:

(A) Species, strain, and rationale for selection of animal species, if other than that recommended.

(B) Age, body weight data, and sex.

(C) Test environment including cage conditions, ambient temperature, humidity, and light/dark periods.

(D) When inhalation is the route of exposure, a description of the exposure equipment and data shall be included as follows:

(*1*) Description of test conditions; the following exposure conditions shall be reported:

(*i*) Description of exposure apparatus including design, type, volume, source of air, system for generating aerosols, method of conditioning air, treatment of exhaust air and the method of housing the animals in a test chamber.

(*ii*) The equipment for measuring temperature, humidity, and particulate aerosol concentrations and size should be described.

(*2*) Exposure data shall be tabulated and presented with mean values and a measure of variability (e.g., standard deviation) and include:

(*i*) Airflow rates through the inhalation equipment.

(*ii*) Temperature and humidity of air.

(*iii*) Actual (analytical or gravimetric) concentration in the breathing zone.

(*iv*) Nominal concentration (total amount of test substance fed into the inhalation equipment divided by volume of air).

(*v*) Particle size distribution, calculated mass median aerodynamic diameter (MMAD) and geometric standard deviation (GSD).

(*vi*) Explanation as to why the desired chamber concentration and/or particle size could not be achieved (if applicable) and the efforts taken to comply with this aspect of the section.

(E) Identification of animal diet.

(iii) The test procedure shall include the following data:

(A) Method of randomization used.

(B) Full description of experimental design and procedure.

(C) Dose regimen including levels, methods, and volume.

(iv) Test results should include the following data:

(A) Group animal toxic response data shall be tabulated by species, strain, sex, and exposure level for:

(*1*) Number of animals exposed.

(*2*) Number of animals showing signs of toxicity.

(*3*) Number of animals dying.

(B) Individual animal data shall be presented, as well as summary (group mean data).

(C) Date of death during the study or whether animals survived to termination.

(D) Date of observation of each abnormal sign and its subsequent course.

(E) Absolute and relative spleen and thymus weight data.

(F) Feed and water consumption data, when collected.

(G) Results of immunotoxicity tests.

(H) Necropsy findings of animals that were found moribund and euthanized or died during the study.

(I) Statistical treatment of results, where appropriate.

(i) *Quality control.* A system shall be developed and maintained to assure and document adequate performance of laboratory staff and equipment. The study shall be conducted in compliance with the 40 CFR Part 792—Good Laboratory Practice.

(j) *References.* For additional background information on this test guideline, the following references should be consulted. These references are available for inspection at the TSCA Nonconfidential Information Center, Rm. NE-B607, Environmental Protection Agency, 401 M St., SW., Washington, DC, 12 noon to 4 p.m., Monday through Friday, except legal holidays.

(1) Cornacoff, J.B., Graham, C.S., and LaBrie, T.K. Eds. Burleson, G.R., Dean, J.H., and Munson, A.E. Phenotypic identification of peripheral blood mononuclear leukocytes by flow cytometry as an adjunct to immunotoxicity evaluation. Vol. 1. *Methods in Immunotoxicology* (Wiley-Liss, Inc., New York, 1995) pp. 211–226.

(2) Cunningham, A.J. A method of increased sensitivity for detecting single antibody-forming cells. *Nature.* 207:1106–1107 (1965).

(3) Djeu, Julie Y. Eds. Burleson, G.R., Dean, J.H., and Munson, A.E. Natural Killer Activity. *Methods in Immunotoxicology*. pp. 437–449 (1995).

(4) Holsapple, M.P. Eds. Burleson, G.R., Dean, J.H., and Munson, A.E. The plaque-forming cell (PFC) response in Immunotoxicology: An approach to monitoring the primary effector function of B lymphocytes. Vol. 1. *Methods in Immunotoxicology* (Wiley-Liss, Inc., New York, 1995) pp. 71–108.

(5) Ladics, G.S. and Loveless, S.E. Cell surface marker analysis of splenic lymphocyte populations of the CD rat for use in immunotoxicological studies. *Toxicology Methods*. 4: 77–91 (1994).

(6) Ladics, G.S., Smith, C., Heaps, K., and Loveless, S.E. Evaluation of the humoral immune response of CD rats following a 2-week exposure to the pesticide carbaryl by the oral, dermal, or inhalation routes. *Journal of Toxicology Environmental Health*. 42:143–156 (1994).

(7) Ladics., G.S., Smith, C., Heaps, K., Elliot, G.S., Slone, T.W., and Loveless, S.E. Possible incorporation of an immunotoxicological functional assay for assessing humoral immunity for hazard identification purposes in rats on standard toxicology study. *Toxicology*. 96:225–238 (1995).

(8) Luster, M.I., Portier, C., Pait, D.G., White, K.L., Jr., Gennings, C., Munson, A.E., and Rosenthal, G.J. Risk assessment in immunotoxicology I. Sensitivity and predictability of immune tests. *Fundamental Applied Toxicology*. 18:200–210 (1992).

(9) Luster, M.I., Portier, C., Pait, D.G., Rosenthal, G.J. Germolec. D.R., Corsini, E., Blaylock, B.L., Pollock, P., Kouchi, Y., Craig, W., White, D.L., Munson, A.E., and Comment, C.E. Risk Assessment in Immunotoxicology II. Relationships Between Immune and Host Resistance Tests. *Fundamental Applied Toxicology*. 21:71–82 (1993).

(10) Temple, L., Kawabata, T. T., Munson, A. E., and White, Jr., K. L. Comparison of ELISA and plaque-forming cell assays for measuring the humoral immune response to SRBC in rats and mice treated with benzo[a]pyrene or cyclophosphamide. *Fundamental Applied Toxicology*. 21:412–419 (1993).

(11) Temple, L., Butterworth, L., Kawabata, T.T., Munson, A.E., and White, Jr., K.L. Eds. Burleson, G.R., Dean, J.H., and Munson, A.E. ELISA to Measure SRBC Specific Serum IgM: Method and Data Evaluation. Vol. 1. *Methods in Immunotoxicology* (Wiley-Liss, Inc., New York, 1995) pp. 137–157.

SUBCHAPTERS S–T [RESERVED]

SUBCHAPTER U—AIR POLLUTION CONTROLS

PART 1039—CONTROL OF EMISSIONS FROM NEW AND IN-USE NONROAD COMPRESSION-IGNITION ENGINES

Subpart A—Overview and Applicability

Sec.
1039.1 Does this part apply for my engines?
1039.5 Which engines are excluded from this part's requirements?
1039.10 How is this part organized?
1039.15 Do any other regulation parts apply to me?
1039.20 What requirements from this part apply to excluded stationary engines?

Subpart B—Emission Standards and Related Requirements

1039.101 What exhaust emission standards must my engines meet after the 2014 model year?
1039.102 What exhaust emission standards and phase-in allowances apply for my engines in model year 2014 and earlier?
1039.104 Are there interim provisions that apply only for a limited time?
1039.105 What smoke standards must my engines meet?
1039.107 What evaporative emission standards and requirements apply?
1039.110 [Reserved]
1039.115 What other requirements must my engines meet?
1039.120 What emission-related warranty requirements apply to me?
1039.125 What maintenance instructions must I give to buyers?
1039.130 What installation instructions must I give to equipment manufacturers?
1039.135 How must I label and identify the engines I produce?
1039.140 What is my engine's maximum engine power?

Subpart C—Certifying Engine Families

1039.201 What are the general requirements for obtaining a certificate of conformity?
1039.205 What must I include in my application?
1039.210 May I get preliminary approval before I complete my application?
1039.220 How do I amend the maintenance instructions in my application?
1039.225 How do I amend my application for certification to include new or modified engines or to change an FEL?
1039.230 How do I select engine families?
1039.235 What emission testing must I perform for my application for a certificate of conformity?
1039.240 How do I demonstrate that my engine family complies with exhaust emission standards?
1039.245 How do I determine deterioration factors from exhaust durability testing?
1039.250 What records must I keep and what reports must I send to EPA?
1039.255 What decisions may EPA make regarding my certificate of conformity?

Subpart D [Reserved]

Subpart E—In-use Testing

1039.401 General provisions.

Subpart F—Test Procedures

1039.501 How do I run a valid emission test?
1039.505 How do I test engines using steady-state duty cycles, including ramped-modal testing?
1039.510 Which duty cycles do I use for transient testing?
1039.515 What are the test procedures related to not-to-exceed standards?
1039.520 What testing must I perform to establish deterioration factors?
1039.525 How do I adjust emission levels to account for infrequently regenerating aftertreatment devices?

Subpart G—Special Compliance Provisions

1039.601 What compliance provisions apply to these engines?
1039.605 What provisions apply to engines certified under the motor-vehicle program?
1039.610 What provisions apply to vehicles certified under the motor-vehicle program?
1039.615 What special provisions apply to engines using noncommercial fuels?
1039.620 What are the provisions for exempting engines used solely for competition?
1039.625 What requirements apply under the program for equipment-manufacturer flexibility?
1039.626 What special provisions apply to equipment imported under the equipment-manufacturer flexibility program?
1039.627 What are the incentives for equipment manufacturers to use cleaner engines?
1039.630 What are the economic hardship provisions for equipment manufacturers?
1039.635 What are the hardship provisions for engine manufacturers?
1039.640 What special provisions apply to branded engines?

1039.645 What special provisions apply to engines used for transportation refrigeration units?
1039.650 [Reserved]
1039.655 What special provisions apply to engines sold in Guam, American Samoa, or the Commonwealth of the Northern Mariana Islands?
1039.660 What special provisions apply to Independent Commercial Importers?

Subpart H—Averaging, Banking, and Trading for Certification

1039.701 General provisions.
1039.705 How do I generate and calculate emission credits?
1039.710 How do I average emission credits?
1039.715 How do I bank emission credits?
1039.720 How do I trade emission credits?
1039.725 What must I include in my application for certification?
1039.730 What ABT reports must I send to EPA?
1039.735 What records must I keep?
1039.740 What restrictions apply for using emission credits?
1039.745 What can happen if I do not comply with the provisions of this subpart?

Subpart I—Definitions and Other Reference Information

1039.801 What definitions apply to this part?
1039.805 What symbols, acronyms, and abbreviations does this part use?
1039.810 What materials does this part reference?
1039.815 What provisions apply to confidential information?
1039.820 How do I request a hearing?
APPENDIX I TO PART 1039 [RESERVED]
APPENDIX II TO PART 1039—STEADY-STATE DUTY CYCLES FOR CONSTANT-SPEED ENGINES
APPENDIX III TO PART 1039—STEADY-STATE DUTY CYCLES FOR VARIABLE-SPEED ENGINES WITH MAXIMUM POWER BELOW 19 KW
APPENDIX IV TO PART 1039—STEADY-STATE DUTY CYCLES FOR VARIABLE-SPEED ENGINES WITH MAXIMUM POWER AT OR ABOVE 19 KW
APPENDIX V TO PART 1039 [RESERVED]
APPENDIX VI TO PART 1039—NONROAD COMPRESSION-IGNITION COMPOSITE TRANSIENT CYCLE

AUTHORITY: 42 U.S.C. 7401–7671q.

SOURCE: 69 FR 39213, June 29, 2004, unless otherwise noted.

Subpart A—Overview and Applicability

§ 1039.1 Does this part apply for my engines?

(a) The regulations in this part 1039 apply for all new, compression-ignition nonroad engines (defined in § 1039.801), except as provided in § 1039.5.

(b) This part 1039 applies as follows:

(1) This part 1039 applies for all engines subject to the emission standards specified in subpart B of this part starting with the model years noted in the following table:

TABLE 1 OF § 1039.1—PART 1039 APPLICABILITY BY MODEL YEAR

Power category	Model year
kW < 19	[1] 2008
19 ≤ kW < 56	[2] 2008
56 ≤ kW < 130	2012
130 ≤ kW ≤ 560	2011
kW > 560	2011

[1] As described in § 1039.102, some engines below 19 kW may not be subject to the emission standards in this part until the 2010 model year.

[2] As described in § 1039.102, some engines in the 19–56 kW power category may not be subject to the emission standards in this part until the 2012 model year.

(2) If you use the provisions of § 1039.104(a) to certify an engine to the emission standards of this part before the model years shown in Table 1 of this section, all the requirements of this part apply for those engines.

(3) See 40 CFR part 89 for requirements that apply to engines not yet subject to the requirements of this part 1039.

(4) This part 1039 applies for other compression-ignition engines as follows:

(i) The provisions of paragraph (c) of this section and § 1039.801 apply for stationary engines beginning January 1, 2006.

(ii) The provisions of § 1039.620 and § 1039.801 apply for engines used solely for competition beginning January 1, 2006.

(c) The definition of nonroad engine in 40 CFR 1068.30 excludes certain engines used in stationary applications. These engines may be required by subpart IIII of 40 CFR part 60 to comply with some of the provisions of this part 1039; otherwise, these engines are only

required to comply with the requirements in § 1039.20. In addition, the prohibitions in 40 CFR 1068.101 restrict the use of stationary engines for nonstationary purposes unless they are certified under this part 1039, or under the provisions of 40 CFR part 89 or 40 CFR part 94, to the same standards that would apply to nonroad engines for the same model year.

(d) In certain cases, the regulations in this part 1039 apply to engines at or above 250 kW that would otherwise be covered by 40 CFR part 1048. See 40 CFR 1048.620 for provisions related to this allowance.

[69 FR 39213, June 29, 2004, as amended at 70 FR 40462, July 13, 2005; 71 FR 39184, July 11, 2006]

§ 1039.5 Which engines are excluded from this part's requirements?

This part does not apply to the following nonroad engines:

(a) *Locomotive engines.* (1) The following locomotive engines are not subject to the provisions of this part 1039:

(i) Engines in locomotives subject to the standards of 40 CFR part 92.

(ii) Engines in locomotives that are exempt from the standards of 40 CFR part 92 pursuant to the provisions of 40 CFR part 92 (except for the provisions of 40 CFR 92.907). For example, an engine that is exempt under 40 CFR 92.906 because it is in a manufacturer-owned locomotive is not subject to the provisions of this part 1039.

(2) The following locomotive engines are subject to the provisions of this part 1039:

(i) Engines in locomotives exempt from 40 CFR part 92 pursuant to the provisions of 40 CFR 92.907.

(ii) Locomotive engines excluded from the definition of locomotive in 40 CFR 92.2.

(b) *Marine engines.* (1) The following marine engines are not subject to the provisions of this part 1039:

(i) Engines subject to the standards of 40 CFR part 94.

(ii) Engines not subject to the standards of 40 CFR part 94 only because they were produced before the standards of 40 CFR part 94 started to apply.

(iii) Engines that are exempt from the standards of 40 CFR part 94 pursuant to the provisions of 40 CFR part 94 (except for the provisions of 40 CFR 94.907 or 94.912). For example, an engine that is exempt under 40 CFR 94.906 because it is a manufacturer-owned engine is not subject to the provisions of this part 1039.

(iv) Engines with rated power below 37 kW.

(v) Engines on foreign vessels.

(2) Marine engines are subject to the provisions of this part 1039 if they are exempt from 40 CFR part 94 based on the engine-dressing provisions of 40 CFR 94.907 or the common-family provisions of 40 CFR 94.912.

(c) *Mining engines.* Engines used in underground mining or in underground mining equipment and regulated by the Mining Safety and Health Administration in 30 CFR parts 7, 31, 32, 36, 56, 57, 70, and 75 are not subject to the provisions of this part 1039.

(d) *Hobby engines.* Engines with per-cylinder displacement below 50 cubic centimeters are not subject to the provisions of this part 1039.

[69 FR 39213, June 29, 2004, as amended at 70 FR 40462, July 13, 2005]

§ 1039.10 How is this part organized?

The regulations in this part 1039 contain provisions that affect both engine manufacturers and others. However, the requirements of this part are generally addressed to the engine manufacturer. The term ''you'' generally means the engine manufacturer, as defined in § 1039.801. This part 1039 is divided into the following subparts:

(a) Subpart A of this part defines the applicability of part 1039 and gives an overview of regulatory requirements.

(b) Subpart B of this part describes the emission standards and other requirements that must be met to certify engines under this part. Note that § 1039.102 and § 1039.104 discuss certain interim requirements and compliance provisions that apply only for a limited time.

(c) Subpart C of this part describes how to apply for a certificate of conformity.

(d) [Reserved]

(e) Subpart E of this part describes general provisions for testing in-use engines.

(f) Subpart F of this part describes how to test your engines (including references to other parts of the Code of Federal Regulations).

(g) Subpart G of this part and 40 CFR part 1068 describe requirements, prohibitions, and other provisions that apply to engine manufacturers, equipment manufacturers, owners, operators, rebuilders, and all others.

(h) Subpart H of this part describes how you may generate and use emission credits to certify your engines.

(i) Subpart I of this part contains definitions and other reference information.

[69 FR 39213, June 29, 2004, as amended at 70 FR 40462, July 13, 2005]

§ 1039.15 Do any other regulation parts apply to me?

(a) Part 1065 of this chapter describes procedures and equipment specifications for testing engines. Subpart F of this part 1039 describes how to apply the provisions of part 1065 of this chapter to determine whether engines meet the emission standards in this part.

(b) The requirements and prohibitions of part 1068 of this chapter apply to everyone, including anyone who manufactures, imports, installs, owns, operates, or rebuilds any of the engines subject to this part 1039, or equipment containing these engines. Part 1068 of this chapter describes general provisions, including these seven areas:

(1) Prohibited acts and penalties for engine manufacturers, equipment manufacturers, and others.

(2) Rebuilding and other aftermarket changes.

(3) Exclusions and exemptions for certain engines.

(4) Importing engines.

(5) Selective enforcement audits of your production.

(6) Defect reporting and recall.

(7) Procedures for hearings.

(c) Other parts of this chapter apply if referenced in this part.

§ 1039.20 What requirements from this part apply to excluded stationary engines?

The provisions of this section apply for engines built on or after January 1, 2006.

(a) You must add a permanent label or tag to each new engine you produce or import that is excluded under § 1039.1(c) as a stationary engine and is not required by 40 CFR part 60, subpart IIII, to meet the requirements of this part 1039, or the requirements of parts 89 or 94, that are equivalent to the requirements applicable to nonroad or marine engines for the same model year. To meet labeling requirements, you must do the following things:

(1) Attach the label or tag in one piece so no one can remove it without destroying or defacing it.

(2) Secure it to a part of the engine needed for normal operation and not normally requiring replacement.

(3) Make sure it is durable and readable for the engine's entire life.

(4) Write it in English.

(5) Follow the requirements in § 1039.135(g) regarding duplicate labels if the engine label is obscured in the final installation.

(b) Engine labels or tags required under this section must have the following information:

(1) Include the heading ''EMISSION CONTROL INFORMATION.''

(2) Include your full corporate name and trademark. You may instead include the fill corporate name and trademark of another company you choose to designate.

(3) State the engine displacement (in liters) and maximum engine power (or in the case of fire pumps, NFPA nameplate engine power).

(4) State: ''THIS ENGINE IS EXEMPTED FROM THE REQUIREMENTS OF 40 CFR PARTS 89 AND 1039 AS A ''STATIONARY ENGINE.'' INSTALLING OR USING THIS ENGINE IN ANY OTHER APPLICATION MAY BE A VIOLATION OF FEDERAL LAW SUBJECT TO CIVIL PENALTY.''

(c) Stationary engines required by 40 CFR part 60, subpart IIII, to meet the requirements of this part 1039, or parts 89 or 94, must meet the labeling requirements of 40 CFR 60.4210.

[69 FR 39213, June 29, 2004, as amended at 71 FR 39185, July 11, 2006]

Subpart B—Emission Standards and Related Requirements

§ 1039.101 What exhaust emission standards must my engines meet after the 2014 model year?

The exhaust emission standards of this section apply after the 2014 model year. Certain of these standards also apply for model year 2014 and earlier. This section presents the full set of emission standards that apply after all the transition and phase-in provisions of § 1039.102 and § 1039.104 expire. See § 1039.102 and 40 CFR 89.112 for exhaust emission standards that apply to 2014 and earlier model years. Section 1039.105 specifies smoke standards.

(a) *Emission standards for transient testing.* Transient exhaust emissions from your engines may not exceed the applicable emission standards in Table 1 of this section. Measure emissions using the applicable transient test procedures described in subpart F of this part. The following engines are not subject to the transient standards in this paragraph (a):

(1) Engines above 560 kW.

(2) Constant-speed engines.

(b) *Emission standards for steady-state testing.* Steady-state exhaust emissions from your engines may not exceed the applicable emission standards in Table 1 of this section. Measure emissions using the applicable steady-state test procedures described in subpart F of this part.

TABLE 1 OF § 1039.101—TIER 4 EXHAUST EMISSION STANDARDS AFTER THE 2014 MODEL YEAR, G/KW-HR [1]

Maximum engine power	Application	PM	NO_X	NMHC	NO_X+NMHC	CO
kW < 19	All	[2] 0.40			7.5	[3] 6.6
19 ≤ kW < 56	All	0.03			4.7	[4] 5.0
56 ≤ kW < 130	All	0.02	0.40	0.19		5.0
130 ≤ kW ≤ 560	All	0.02	0.40	0.19		3.5
	Generator sets	0.03	0.67	0.19		3.5
kW > 560	All except generator sets	0.04	3.5	0.19		3.5

[1] Note that some of these standards also apply for 2014 and earlier model years. This table presents the full set of emission standards that apply after all the transition and phase-in provisions of § 1039.102 expire.
[2] See paragraph (c) of this section for provisions related to an optional PM standard for certain engines below 8 kW.
[3] The CO standard is 8.0 g/kW-hr for engines below 8 kW.
[4] The CO standard is 5.5 g/kW-hr for engines below 37 kW.

(c) *Optional PM standard for engines below 8 kW.* You may certify hand-startable, air-cooled, direct injection engines below 8 kW to an optional Tier 4 PM standard of 0.60 g/kW-hr. The term hand-startable generally refers to engines that are started using a hand crank or pull cord. This PM standard applies to both steady-state and transient testing, as described in paragraphs (a) and (b) of this section. Engines certified under this paragraph (c) may not be used to generate PM or NO_X+NMHC emission credits under the provisions of subpart H of this part. These engines may use PM or NO_X+NMHC emission credits, subject to the FEL caps in paragraph (d)(1) of this section.

(d) *Averaging, banking, and trading.* You may generate or use emission credits under the averaging, banking, and trading (ABT) program, as described in subpart H of this part. This requires that you specify a family emission limit (FEL) for each pollutant you include in the ABT program for each engine family. These FELs serve as the emission standards for the engine family with respect to all required testing instead of the standards specified in paragraphs (a) and (b) of this section. The FELs determine the not-to-exceed standards for your engine family, as specified in paragraph (e) of this section.

(1) *Primary FEL caps.* The FEL may not be higher than the limits in Table 2 of this section, except as allowed by paragraph (d)(2) of this section or by § 1039.102:

TABLE 2 OF § 1039.101—TIER 4 FEL CAPS AFTER THE 2014 MODEL YEAR, G/KW-HR

Maximum engine power	Application	PM	NO_X	NO_X+NMHC
kW < 19	All	0.80	.....	[1] 9.5
19 ≤ kW < 56	All	0.05	.....	7.5
56 ≤ kW < 130	All	0.04	0.80	.....
130 ≤ kW ≤ 560	All	0.04	0.80	.....
kW > 560	Generator sets	0.05	1.07	.....
	All except generator sets	0.07	6.2	.....

[1] For engines below 8 kW, the FEL cap is 10.5 g/kW-hr for NO_X+NMHC emissions.

(2) *Alternate FEL caps.* For a given power category, you may use the alternate FEL caps shown in Table 3 of this section instead of the FEL caps identified in paragraph (d)(1) of this section for up to 5 percent of your U.S.-directed production volume in a given model year.

TABLE 3 OF § 1039.101—ALTERNATE FEL CAPS, G/KW-HR

Maximum engine power	Starting model year [1]	PM FEL cap	NO_X FEL cap
19 ≤ kW < 56	[2] 2016	0.30	.....
56 ≤ kW < 130	2016	[3] 0.30	[3] 3.8
130 ≤ kW ≤ 560	2015	0.20	3.8
kW > 560	2019	0.10	[4] 3.5

[1] See § 1039.104(g) for alternate FEL caps that apply in earlier model years.
[2] For manufacturers certifying engines under Option #1 of Table 3 of § 1039.102, these alternate FEL caps apply starting with the 2017 model year.
[3] For engines below 75 kW, the FEL caps are 0.40 g/kW-hr for PM emissions and 4.4 g/kW-hr for NO_X emissions.
[4] For engines above 560 kW, the provision for alternate NO_X FEL caps is limited to generator-set engines. For example, if you produce 1,000 generator-set engines above 560 kW in a given model year, up to 50 of them may be certified to the alternate NO_X FEL caps.

(e) *Not-to-exceed standards.* Exhaust emissions from your engines may not exceed the applicable not-to-exceed (NTE) standards in this paragraph (e).

(1) Measure emissions using the procedures described in subpart F of this part.

(2) Except as noted in paragraph (e)(7) of this section, the NTE standard, rounded to the same number of decimal places as the applicable standard in Table 1 of this section, is determined from the following equation:

$$\text{NTE standard for each pollutant} = (\text{STD}) \times (\text{M})$$

Where:

STD = The standard specified for that pollutant in Table 1 of this section (or paragraph (c) of this section) if you certify without using ABT for that pollutant; or the FEL for that pollutant if you certify using ABT.

M = The NTE multiplier for that pollutant, as defined in paragraph (e)(3) of this section.

(3) The NTE multiplier for each pollutant is 1.25, except in the following cases:

If . . .	Or . . .	Then . . .
(i) The engine family is certified to a NO_X standard less than 2.50 g/kW-hr without using ABT.	The engine family is certified to a NO_X FEL less than 2.50 g/kW-hr or a NO_X+NMHC FEL less than 2.70 g/kW-hr.	The multiplier for NO_X, NMHC, and NO_X+NMHC is 1.50.
(ii) The engine family is certified to a PM standard less than 0.07 g/kW-hr without using ABT.	The engine family is certified to a PM FEL less than 0.07 g/kW-hr.	The multiplier for PM is 1.50.

(4) There are two sets of specifications of ambient operating regions that will apply for all NTE testing of engines in an engine family. You must choose one set for each engine family and must identify your choice of ambient operating regions in each application for certification for an engine

family. You may choose separately for each engine family. Choose one of the following ambient operating regions:

(i) All altitudes less than or equal to 5,500 feet above sea level during all ambient temperature and humidity conditions.

(ii) All altitudes less than or equal to 5,500 feet above sea level, for temperatures less than or equal to the temperature determined by the following equation at the specified altitude:

$$T = -0.00254 \times A + 100$$

Where:

T = ambient air temperature in degrees Fahrenheit.

A = altitude in feet above sea level (A is negative for altitudes below sea level).

(5) Temperature and humidity ranges for which correction factors are allowed are specified in 40 CFR 86.1370–2007(e).

(i) If you choose the ambient operating region specified in paragraph (e)(4)(i) of this section, the temperature and humidity ranges for which correction factors are allowed are defined in 40 CFR 86.1370–2007(e)(1).

(ii) If you choose the ambient operating region specified in paragraph (e)(4)(ii) of this section, the temperature and humidity ranges for which correction factors are allowed are defined in 40 CFR 86.1370–2007(e)(2).

(6) For engines equipped with exhaust-gas recirculation, the NTE standards of this section do not apply during the cold operating conditions specified in 40 CFR 86.1370–2007(f).

(7) For engines certified to a PM FEL less than or equal to 0.01 g/kW-hr, the PM NTE standard is 0.02 g/kW-hr.

(f) *Fuel types.* The exhaust emission standards in this section apply for engines using the fuel type on which the engines in the engine family are designed to operate, except for engines certified under § 1039.615. For engines certified under § 1039.615, the standards of this section apply to emissions measured using the specified test fuel. You must meet the numerical emission standards for NMHC in this section based on the following types of hydrocarbon emissions for engines powered by the following fuels:

(1) Alcohol-fueled engines: THCE emissions.

(2) Other engines: NMHC emissions.

(g) *Useful life.* Your engines must meet the exhaust emission standards in paragraphs (a) through (e) of this section over their full useful life.

(1) The useful life values are shown in the following table, except as allowed by paragraph (g)(2) of this section:

TABLE 4 OF § 1039.101—USEFUL LIFE VALUES

If your engine is certified as . . .	And its maximum power is . . .	And its rated speed is . . .	Then its useful life is . . .
(i) Variable speed or constant speed.	kW <19	Any Speed	3,000 hours or five years, whichever comes first.
(ii) Constant speed	19 ≤ kW <37	3,000 rpm or higher	3,000 hours or five years, whichever comes first.
(iii) Constant speed	19 ≤ kW <37	Less than 3,000 rpm	5,000 hours or seven years, whichever comes first.
(iv) Variable	19 ≤ kW <37	Any Speed	5,000 hours or seven years, whichever comes first.
(v) Variable speed or constant speed.	kW ≥37	Any speed	8,000 hours or ten years, whichever comes first.

(2) You may request in your application for certification that we approve a shorter useful life for an engine family. We may approve a shorter useful life, in hours of engine operation but not in years, if we determine that these engines will rarely operate longer than the shorter useful life. If engines identical to those in the engine family have already been produced and are in use, your demonstration must include documentation from such in-use engines. In other cases, your demonstration must include an engineering analysis of information equivalent to such in-use data, such as data from research engines or similar engine models that are already in production. Your demonstration must also include any overhaul interval that you recommend, any

mechanical warranty that you offer for the engine or its components, and any relevant customer design specifications. Your demonstration may include any other relevant information. The useful life value may not be shorter than any of the following:

(i) 1,000 hours of operation.

(ii) Your recommended overhaul interval.

(iii) Your mechanical warranty for the engine.

(h) *Applicability for testing.* The emission standards in this subpart apply to all testing, including certification, selective enforcement audits, and in-use testing. For selective enforcement audits, we will require you to perform duty-cycle testing as specified in §§ 1039.505 and 1039.510. The NTE standards of this section apply for those tests. We will not direct you to do additional testing under a selective enforcement audit to show that your engines meet the NTE standards.

[69 FR 39213, June 29, 2004, as amended at 70 FR 40462, July 13, 2005]

§ 1039.102 What exhaust emission standards and phase-in allowances apply for my engines in model year 2014 and earlier?

The exhaust emission standards of this section apply for 2014 and earlier model years. See § 1039.101 for exhaust emission standards that apply to later model years. See 40 CFR 89.112 for exhaust emission standards that apply to model years before the standards of this part 1039 take effect.

(a) *Emission standards for transient testing.* Transient exhaust emissions from your engines may not exceed the applicable emission standards in Tables 1 through 6 of this section. Measure emissions using the applicable transient test procedures described in subpart F of this part. See paragraph (c) of this section for a description of provisions related to the phase-in and phase-out standards shown in Tables 4 through 6 of this section. The emission standards for transient testing are limited for certain engines, as follows:

(1) The transient standards in this section do not apply for the following engines:

(i) Engines below 37 kW for model years before 2013.

(ii) Engines certified under Option #1 of Table 3 of this section. These are the small-volume manufacturer engines certified to the Option #1 standards for model years 2008 through 2015 under § 1039.104(c), and other engines certified to the Option #1 standards for model years 2008 through 2012.

(iii) Engines certified to an alternate FEL during the first four years of the Tier 4 standards for the applicable power category, as allowed in § 1039.104(g). However, you may certify these engines to the transient standards in this section to avoid using temporary compliance adjustment factors, as described in § 1039.104(g)(2). Note that in some cases this four-year period extends into the time covered by the standards in § 1039.101.

(iv) Constant-speed engines.

(v) Engines above 560 kW.

(2) The transient standards in this section for gaseous pollutants do not apply to phase-out engines that you certify to the same numerical standards (and FELs if the engines are certified using ABT) for gaseous pollutants as you certified under the Tier 3 requirements of 40 CFR part 89. However, except as specified by paragraph (a)(1) of this section, the transient PM emission standards apply to these engines.

(b) Emission standards for steady-state testing. Steady-state exhaust emissions from your engines may not exceed the applicable emission standards in Tables 1 through 7 of this section. Measure emissions using the applicable steady-state test procedures described in subpart F of this part. See paragraph (c) of this section for a description of provisions related to the phase-in and phase-out standards shown in Tables 4 through 6 of this section.

TABLE 1 OF § 1039.102—TIER 4 EXHAUST EMISSION STANDARDS (G/KW-HR): KW < 19

Maximum engine power	Model years	PM	NO_X + NMHC	CO
kW < 8	2008–2014	[1] 0.40	7.5	8.0

TABLE 1 OF § 1039.102—TIER 4 EXHAUST EMISSION STANDARDS (G/KW-HR): KW < 19—Continued

Maximum engine power	Model years	PM	NO_X + NMHC	CO
8 ≤ kW < 19	2008–2014	0.40	7.5	6.6

[1] For engines that qualify for the special provisions in § 1039.101(c), you may delay certifying to the standards in this part 1039 until 2010. In 2009 and earlier model years, these engines must instead meet the applicable Tier 2 standards and other requirements from 40 CFR part 89. Starting in 2010, these engines must meet a PM standard of 0.60 g/kW-hr, as described in § 1039.101(c). Engines certified to the 0.60 g/kWhr PM standard may not generate ABT credits.

TABLE 2 OF § 1039.102—INTERIM TIER 4 EXHAUST EMISSION STANDARDS (G/KW-HR): 19 > KW < 37

Model years	PM	NO_X + NMHC	CO
2008–2012	0.30	7.5	5.5
2013–2014	0.03	4.7	5.5

TABLE 3 OF § 1039.102—INTERIM TIER 4 EXHAUST EMISSION STANDARDS (G/KW-HR): 37 > KW < 56

Option [1]	Model years	PM	NO_X + NMHC	CO
#1	2008–2012	0.30	4.7	5.0
#2	2012	0.03	4.7	5.0
All	2013–2014	0.03	4.7	5.0

[1] You may certify engines to the Option #1 or Option #2 standards starting in the listed model year. Under Option #1, all engines at or above 37 kW and below 56 kW produced before the 2013 model year must meet the applicable Option #1 standards in this table. These engines are considered to be ''Option #1 engines.'' Under Option #2, all these engines produced before the 2012 model year must meet the applicable standards under 40 CFR part 89. Engines certified to the Option #2 standards in model year 2012 are considered to be ''Option #2 engines.''

TABLE 4 OF § 1039.102—INTERIM TIER 4 EXHAUST EMISSION STANDARDS (G/KW-HR): 56 > KW < 75

Model years [1]	Phase-in option	PM	NO_X	NMHC	NO_X + NMHC	CO
	Phase-in	0.02	0.40	0.19		5.0
2012–2013	Phase-out	0.02			4.7	5.0
2014	All engines	0.02	0.40	0.19		5.0

[1] See paragraph (d)(2) of this section for provisions that allow for a different phase-in schedule than that specified in paragraph (c)(1) of this section.

TABLE 5 OF § 1039.102—INTERIM TIER 4 EXHAUST EMISSION STANDARDS (G/KW-HR): 75 > KW < 130

Model years [1]	Phase-in option	PM	NO_X	NMHC	NO_X + NMHC	CO
	Phase-in	0.02	0.40	0.19		5.0
2012–2013	Phase-out	0.02			4.0	5.0
2014	All engines	0.02	0.40	0.19		5.0

[1] See paragraph (d)(2) of this section for provisions that allow for a different phase-in schedule than that specified in paragraph (c)(1) of this section.

TABLE 6 OF § 1039.102—INTERIM TIER 4 EXHAUST EMISSION STANDARDS (G/KW-HR): 130 > KW < 560

Model years [1]	Phase-in option	PM	NO_X	NMHC	NO_X + NMHC	CO
	Phase-in	0.02	0.40	0.19		3.5
2011–2013	Phase-out	0.02			4.0	3.5
2014	All engines	0.02	0.40	0.19		3.5

TABLE 7 OF § 1039.102—INTERIM TIER 4 EXHAUST EMISSION STANDARDS (G/KW-HR): KW > 560

Model years	Maximum engine power	Application	PM	NO_X	NMHC	CO
	560 < kW ≤ 900	All	0.10	3.5	0.40	3.5
		Generator sets	0.10	0.67	0.40	3.5

TABLE 7 OF § 1039.102—INTERIM TIER 4 EXHAUST EMISSION STANDARDS (G/KW-HR): KW > 560—Continued

Model years	Maximum engine power	Application	PM	NO_X	NMHC	CO
2011–2014	kW > 900	All except generator sets.	0.10	3.5	0.40	3.5

(c) *Phase-in requirements.* The following phase-in provisions apply for engines in 56–560 kW power categories meeting the interim Tier 4 standards in paragraphs (a) and (b) of this section:

(1) For each model year before 2014 noted in Tables 4 through 6 of this section, you must certify engine families representing at least 50 percent of your U.S.-directed production volume for each power category to the applicable phase-in standards, except as allowed by paragraph (c)(3), (d)(2), or (e) of this section. Any engines not certified to the phase-in standards must be certified to the corresponding phase-out standards.

(2) Engines certified to the phase-out standards in Tables 4 through 6 of this section must comply with all other requirements that apply to Tier 4 engines, except as otherwise specified in this section.

(3) At the time of certification, show how you intend to meet the phase-in requirements of this paragraph (c) based on projected U.S.-directed production volumes. If your actual U.S.-directed production volume fails to meet the phase-in requirements for a given model year, you must make up the shortfall (in terms of number of engines) by the end of the model year representing the final year of the phase-in period. For example, if you plan in good faith to produce 50 percent of a projected 10,000 engines in the 56–130 kW power category (*i.e.*, 5,000 engines) in 2012 in compliance with the Tier 4 phase-in standards for NO_X and NMHC in Table 4 of this section, but produce 4,500 such engines of an actual 10,000 engines, you must produce 500 engines in model year 2013 (*i.e.*, the final year of the phase-in for this power category) that meet the Tier 4 phase-in standards above and beyond the production otherwise needed to meet the 50-percent phase-in requirement for model year 2013. If any shortfall exceeds the applicable limit of paragraph (c)(3)(i) or (ii) of this section, that number of phase-out engines will be considered not covered by a certificate of conformity and in violation of § 1068.101(a)(1). The shortfall allowed by this paragraph (c)(3) may not exceed a certain number of engines, as follows:

(i) For engine families certified according to the alternate phase-in schedule described in paragraph (d)(2) of this section, for model years prior to the final year of the phase-in, 5 percent of your actual U.S.-directed production volume for that power category in that model year.

(ii) For all other engine families, for model years prior to the final year of the phase-in, 25 percent of your actual U.S.-directed production volume for that power category in that model year.

(iii) No shortfall is allowed in the final year of the phase-in.

(4) Engines you introduce into commerce beyond the limits described in paragraphs (c)(3) of this section will be considered not covered by a certificate of conformity and in violation of § 1068.101(a)(1).

(5) For the purposes of this part, the term ''phase-in'' means relating to a standard that is identified in this section as a phase-in standard and the term ''phase-out'' means relating to a standard that is identified in this section as a phase-out standard. For example, a 200–kW engine from the 2012 model year that is certified to the 4.0 g/kW-hr NO_X+NMHC standard in Table 6 of § 1039.102 is a phase-out engine.

(d) *Banked credits and alternate phase-in for 56–130 kW engines.* For engines in the 56–130 kW power category, you may use only one of the following additional provisions:

(1) For model years 2012 through 2014, you may use banked NO_X+NMHC credits from any Tier 2 engine at or above 37 kW certified under 40 CFR part 89 to

meet the NO_X phase-in standards or the NO_X+NMHC phase-out standards under paragraphs (b) and (c) of this section, subject to the additional ABT provisions in §1039.740.

(2) Instead of meeting the phase-in requirements of paragraph (c)(1) of this section, you may certify engine families representing at least 25 percent of your U.S.-directed production volume for each model year from 2012 through 2014 to the applicable phase-in standards in Tables 4 and 5 of this section, except as allowed by paragraph (c)(3) or (e) of this section. Any engines not certified to the phase-in standards must be certified to the corresponding phase-out standards. Engines certified under this paragraph (d)(2) may generate NO_X emission credits only for averaging within the same power category during the same model year. For engines certified under this paragraph (d)(2), the 2014 model year may not extend beyond December 30, 2014.

(e) *Alternate NO_X* standards. For engines in 56–560 kW power categories during the phase-in of Tier 4 standards, you may certify engine families to the alternate NO_X standards in this paragraph (e) instead of the phase-in and phase-out NO_X and NO_X+NMHC standards described in Tables 4 through 6 of this section. Engines certified under this section must be certified to an NMHC standard of 0.19 g/kW-hr. Do not include engine families certified under this paragraph (e) in determining whether you comply with the percentage phase-in requirements of paragraphs (c) and (d)(2) of this section. Except for the provisions for alternate FEL caps in §1039.104(g), the NO_X standards and FEL caps under this paragraph (e) are as follows:

(1) For engines in the 56–130 kW power category, apply the following alternate NO_X standards and FEL caps:

(i) If you use the provisions of paragraph (d)(1) of this section, your alternate NO_X standard for any engine family in the 56–130 kW power category is 2.3 g/kW-hr for model years 2012 and 2013. Engines certified to this standard may not exceed a NO_X FEL cap of 3.0 g/kW-hr.

(ii) If you use the provisions of paragraph (d)(2) of this section, your alternate NO_X standard for any engine family in the 56–130 kW power category is 3.4 g/kW-hr for model years 2012 through 2014. Engines below 75 kW certified to this standard may not exceed a NO_X FEL cap of 4.4 g/kW-hr; engines at or above 75 kW certified to this standard may not exceed a NO_X FEL cap of 3.8 g/kW-hr.

(iii) If you do not use the provisions of paragraph (d) of this section, you may apply the alternate NO_X standard and the appropriate FEL cap from either paragraph (e)(1)(i) or (ii) of this section.

(2) For engines in the 130–560 kW power category, the alternate NO_X standard is 2.0 g/kW-hr for model years 2011 through 2013. Engines certified to this standard may not exceed a NO_X FEL cap of 2.7 g/kW-hr.

(f) *Split families.* For generating or using credits for engines in 56–560 kW power categories during the phase-in of Tier 4 standards, you may split an engine family into two subfamilies (for example, one that uses credits and one that generates credits for the same pollutant).

(1) Identify any split engine families in your application for certification. Your engines must comply with all the standards and requirements applicable to Tier 4 engines, except as noted in this paragraph (f). You may calculate emission credits relative to different emission standards (*i.e.*, phase-in and phase-out standards) for different sets of engines within the engine family, but the engine family must be certified to a single set of standards and FELs. To calculate NO_X+NMHC emission credits, add the NO_X FEL to the NMHC phase-in standard for comparison with the applicable NO_X+NMHC phase-out standard. Any engine family certified under this paragraph (f) must meet the applicable phase-in standard for NMHC. You may assign the number and configurations of engines within the respective subfamilies any time before the due date for the final report required in §1039.730. Apply the same label to each engine in the family, including the NO_X FEL to which it is certified.

(2) For example, a 10,000-unit engine family in the 75–130 kW power category may be certified to meet the standards for PM, NMHC, and CO that apply to

phase-in engines, with a 0.8 g/kW-hr FEL for NO_X. When compared to the phase-out NO_X+NMHC standard, this engine family would generate positive NO_X+NMHC emission credits. When compared to the phase-in NO_X standard, this engine family would generate negative NO_X emission credits. You could create a subfamily with 2,500 engines (one-quarter of the 10,000 engines) and identify them as phase-in engines. You would count these 2,500, with their negative NO_X credits, in determining compliance with the 50-percent phase-in requirement in paragraph (c)(1) of this section. You would calculate negative credits relative to the 0.40 g/kW-hr NO_X standard for these 2,500 engines. You would identify the other 7,500 engines in the family as phase-out engines and calculate positive credits relative to the 4.0 g/kW-hr NO_X+NMHC standard.

(g) *Other provisions.* The provisions of § 1039.101(d) through (h) apply with respect to the standards of this section, with the following exceptions and special provisions:

(1) *NTE standards.* Use the provisions of § 1039.101(e)(3) to calculate and apply the NTE standards, but base these calculated values on the applicable standards in this section or the applicable FEL, instead of the standards in Table 1 of § 1039.101. All other provisions of § 1039.101(e) apply under this paragraph (g)(1). The NTE standards do not apply for certain engines and certain pollutants, as follows:

(i) All engines below 37 kW for model years before 2013.

(ii) All engines certified under Option #1 of Table 3 of this section. These are small-volume manufacturer engines certified to the Option #1 standards for model years 2008 through 2015 under § 1039.104(c), and other engines certified to the Option #1 standards for model years 2008 through 2012.

(iii) All engines less than or equal to 560 kW that are certified to an FEL under the alternate FEL program during the first four years of the Tier 4 standards for the applicable power category, as described in § 1039.104(g). However, if you apply to meet transient emission standards for these engines under § 1039.102(a)(1)(iii), you must also meet the NTE standards in this paragraph (g)(1).

(iv) Gaseous pollutants for phase-out engines that you certify to the same numerical standards and FELs for gaseous pollutants to which you certified under the Tier 3 requirements of 40 CFR part 89. However, the NTE standards for PM apply to these engines.

(2) *Interim FEL caps.* As described in 1039.101(d), you may participate in the ABT program in subpart H of this part by certifying engines to FELs for PM, NO_X, or NO_X+NMHC instead of the standards in Tables 1 through 7 of this section for the model years shown. The FEL caps listed in the following table apply instead of the FEL caps in § 1039.101(d)(1), except as allowed by § 1039.104(g):

TABLE 8 OF § 1039.102—INTERIM TIER 4 FEL CAPS, G/KW-HR

Maximum engine power	Phase-in option	Model years [1]	PM	NO_X	NO_X+NMHC
kW < 19		2008–2014	0.80		[2]9.5
19 ≤ kW < 37		2008–2012	0.60		9.5
37 ≤ kW < 56		[3]2008–2012	0.40		7.5
56 ≤ kW < 130	Phase-in	2012–2013	0.04	0.80	
56 ≤ kW < 130	Phase-out	2012–2013	0.04		[4]6.6
130 ≤ kW ≤ 560	Phase-in	2011–2013	0.04	0.80	
130 ≤ kW ≤ 560	Phase-out	2011–2013	0.04		[5]6.4
kW > 560		2011–2014	0.20	6.2	

[1] For model years before 2015 where this table does not specify FEL caps, apply the FEL caps shown in § 1039.101.
[2] For engines below 8 kW, the FEL cap is 10.5 g/kW-hr for NO_X+NMHC emissions.
[3] For manufacturers certifying engines to the standards of this part 1039 in 2012 under Option #2 of Table 3 of § 1039.102, the FEL caps of § 1039.101 apply for model year 2012 and later; see 40 CFR part 89 for provisions that apply to earlier model years.
[4] For engines below 75 kW, the FEL cap is 7.5 g/kW-hr for NO_X+NMHC emissions.
[5] For engines below 225 kW, the FEL cap is 6.6 g/kW-hr for NO_X+NMHC emissions.

(3) *Crankcase emissions.* The crankcase emission requirements of § 1039.115(a) do not apply to engines using charge-air compression that are certified to an

FEL under the alternate FEL program in § 1039.104(g) during the first four years of the Tier 4 standards for the applicable power category.

(4) *Special provisions for 37–56 kW engines.* For engines at or above 37 kW and below 56 kW from model years 2008 through 2012, you must take the following additional steps:

(i) State the applicable PM standard on the emission control information label.

(ii) Add information to the emission-related installation instructions to clarify the equipment manufacturer's obligations under § 1039.104(f).

§ 1039.104 Are there interim provisions that apply only for a limited time?

The provisions in this section apply instead of other provisions in this part. This section describes when these interim provisions apply.

(a) *Incentives for early introduction.* This paragraph (a) allows you to reduce the number of engines subject to the applicable standards in § 1039.101 or § 1039.102, when some of your engines are certified to the specified levels earlier than otherwise required. The engines that are certified early are considered offset-generating engines. The provisions of this paragraph (a), which describe the requirements applicable to offset-generating engines, apply beginning in model year 2007. These offset generating engines may generate additional allowances for equipment manufacturers under the incentive program described in § 1039.627; you may instead use these offsets under paragraph (a)(2) of this section in some cases.

(1) For early-compliant engines to generate offsets for use either under this paragraph (a) or under § 1039.627, you must meet the following general provisions:

(i) You may not generate offsets from engines below 19 kW.

(ii) You must begin actual production of engines covered by the corresponding certificate by the following dates:

(A) For engines at or above 19 kW and below 37 kW: September 1, 2012.

(B) For engines at or above 37 kW and below 56 kW: September 1, 2012 if you choose Option #1 in Table 3 of § 1039.102, or September 1, 2011 if you do not choose Option #1 in Table 3 of § 1039.102.

(C) For engines in the 56–130 kW power category: September 1, 2011.

(D) For engines in the 130–560 kW power category: September 1, 2010.

(E) For engines above 560 kW: September 1, 2014.

(iii) Engines you produce after December 31 of the year shown in paragraph (a)(1)(ii) of this section may not generate offsets.

(iv) You may not use ABT credits to certify offset-generating engines.

(v) Offset-generating engines must be certified to the Tier 4 standards and requirements under this part 1039.

(2) If equipment manufacturers decline offsets for your offset-generating engines under § 1039.627, you may not generate ABT credits with these engines, but you may reduce the number of engines that are required to meet the standards in § 1039.101 or 1039.102 as follows:

For every . . .	With maximum engine power . . .	That are certified to the applicable standards in . . .	You may reduce the number of engines in the same power category that are required to meet the . . .	In later model years by . . .
(i) 2 engines	19 ≤ kW < 37	Table 2 of § 1039.102 [1].	PM standard in Table 2 of § 1039.102 applicable to model year 2013 or 2014 engines or the PM standard in Table 1 of § 1039.101.	3 engines.
(ii) 2 engines	56 ≤ kW ≤ 560	Table 4, 5, or 6 of § 1039.102 for Phase-out engines.	Phase-out standards in Tables 4 through 6 of § 1039.102.	3 engines.
(iii) 2 engines	kW ≥ 19	Table 1 of § 1039.101	Standards in Tables 2 through 7 of § 1039.102 or standards in Table 1 of § 1039.101.	3 engines.[2]
(iv) 1 engine	kW ≥ 19	Table 1 of § 1039.101 + 0.20 g/kW-hr NO_X standard.	Standards in Tables 2 through 7 of § 1039.102 or standards in Table 1 of § 1039.101.	2 engines.[2]

[1] The engine must be certified to the PM standard applicable to model year 2013 engines, and to the NO_X+NMHC and CO standards applicable to model year 2012 engines.

[2] For engines above 560 kW, offsets from generator-set engines may be used only for generator-set engines. Offsets from engines for other applications may be used only for other applications besides generator sets.

(3) Example: If you produce 100 engines in the 56–130 kW power category in model year 2008 that are certified to the 56–130 kW standards listed in § 1039.101, and you produced 10,000 engines in this power category in model year 2015, then only 9,850 of these model year 2015 engines would need to comply with the standards listed in § 1039.101. The 100 offset-generating engines in model year 2008 could not use or generate ABT credits.

(4) Offset-using engines (that is, those not required to certify to the standards of § 1039.101 or § 1039.102 under paragraph (a)(2) of this section) are subject to the following provisions:

(i) If the offset is being used under paragraph (a)(2)(i) of this section for an engine that would otherwise be certified to the model year 2013 or 2014 standards in Table 2 of § 1039.102 or the standards in Table 1 of § 1039.101, this engine must be certified to the standards and requirements of this part 1039, except that the only PM standard that applies is the steady-state PM standard that applies for model year 2012. Such an engine may not generate ABT credits.

(ii) If the offset is being used under paragraph (a)(2)(ii) of this section for an engine that would otherwise be certified to the phase-out standards in Tables 4 through 6 of § 1039.102, this engine must be certified to the standards and requirements of this part 1039, except that the PM standard is the Tier 3 PM standard that applies for this engine's maximum power. Such an engine will be treated as a phase-out engine for purposes of determining compliance with percentage phase-in requirements. Such an engine may not generate ABT credits.

(iii) All other offset-using engines must meet the standards and other provisions that apply in model year 2011 for engines in the 19–130 kW power categories, in model year 2010 for engines in the 130–560 kW power category, or in model year 2014 for engines above 560 kW. Show that engines meet these emission standards by meeting all the requirements of § 1068.265. You must meet the labeling requirements in § 1039.135, but add the following statement instead of the compliance statement in § 1039.135(c)(12): ''THIS ENGINE MEETS U.S. EPA EMISSION STANDARDS UNDER 40 CFR 1039.104(a).'' For power categories with a percentage phase-in, these engines should be treated as phase-in engines for purposes of determining compliance with phase-in requirements.

(5) If an equipment manufacturer claims offsets from your engine for use under § 1039.627, the engine generating the offset must comply with the requirements of paragraph (a)(1) of this section. You may not generate offsets for use under paragraphs (a)(2) and (5) of this section for these engines. You may generate ABT credits from these engines as follows:

(i) To generate emission credits for NO_X, NO_X+NMHC, and PM, the engine must be certified to FELs at or below the standards in paragraph (a)(2) of this section.

(ii) Calculate credits according to § 1039.705 but use as the applicable standard the numerical value of the standard to which the engine would have otherwise been subject if it had not been certified under this paragraph (a).

(iii) For the production volume, use the number of engines certified under this paragraph (a) for which you do not claim offsets under paragraph (a)(2) of this section.

(6) You may include engines used to generate offsets under this paragraph (a) and engines used to generate offsets under § 1039.627 in the same engine family, subject to the provisions of § 1039.230. The engine must be certified to FELs, as specified in paragraph (a)(5)(i) of this section. The FELs must be below the standard levels specified in paragraph (a)(2) of this section and those specified in § 1039.627. In the reports required in § 1039.730, include the following information for each model year:

(i) The total number of engines that generate offsets under this paragraph (a).

(ii) The number of engines used to generate offsets under paragraph (a)(2) of this section.

(iii) The names of equipment manufacturers that intend to use your offsets under §1039.627 and the number of offsets involved for each equipment manufacturer.

(b) *In-use compliance limits.* For purposes of determining compliance after title or custody has transferred to the ultimate purchaser, calculate the applicable in-use compliance limits by adjusting the applicable standards or FELs. This applies only for engines at or above 19 kW. The NO_X adjustment applies only for engines with a NO_X FEL no higher than 2.1 g/kW-hr The PM adjustment applies only for engines with a PM FEL no higher than the PM standard in §1039.101 for the appropriate power category. Add the following adjustments to the otherwise applicable standards or FELs (steady-state, transient, and NTE) for NO_X and PM:

In model years . . .	If your engine's maximum power is . . .	The NO_X adjustment in g/kW-hr is . . .	The PM adjustment in g/kW-hr is . . .
2013–2014	19 ≤ kW < 56	not allowed	0.01
2012–2016	56 ≤ kW < 130	0.16 for operating hours ≤ 2000	0.01
		0.25 for operating hours 2001 to 3400	
		0.34 for operating hours > 3400	
2011–2015	130 ≤ kW < 560	0.16 for operating hours ≤ 2000	0.01
		0.25 for operating hours 2001 to 3400	
		0.34 for operating hours > 3400	
2011–2016	kW > 560	0.16 for operating hours ≤ 2000	0.01
		0.25 for operating hours 2001 to 3400	
		0.34 for operating hours > 3400	

(c) *Provisions for small-volume manufacturers.* Special provisions apply if you are a small-volume engine manufacturer subject to the requirements of this part. You must notify us in writing before January 1, 2008 if you intend to use these provisions.

(1) You may delay complying with certain otherwise applicable Tier 4 emission standards and requirements as described in the following table:

If your engine's maximum power is . . .	You may delay meeting . . .	Until model year . . .	Before that model year the engine must comply with . . .
kW < 19	The standards and requirements of this part	2011	The standards and requirements in 40 CFR part 89.
19 ≤ kW < 37	The Tier 4 standards and requirements of this part that would otherwise be applicable in model year 2013.	2016	The Tier 4 standards and requirements that apply for model year 2008.
37 ≤ kW < 56	See paragraph (c)(2) of this section for special provisions that apply for engines in this power category.		
56 ≤ kW < 130	The standards and requirements of this part	2015	The standards and requirements in 40 CFR part 89.

(2) To use the provisions of this paragraph (c) for engines at or above 37 kW and below 56 kW, choose one of the following:

(i) If you comply with the 0.30 g/kW-hr PM standard in §1039.102 in all model years from 2008 through 2012 without using PM credits, you may continue meeting that standard through 2015.

(ii) If you do not choose to comply with paragraph (c)(2)(i) of this section, you may continue to comply with the standards and requirements in 40 CFR part 89 for model years through 2012, but you must begin complying in 2013 with Tier 4 standards and requirements specified in Table 3 of §1039.102 for model years 2013 and later.

(3) After the delays indicated in paragraph (c)(1) and (2) of this section, you must comply with the same Tier 4 standards and requirements as all other manufacturers.

(4) For engines not in the 19–56 kW power category, if you delay compliance with any standards under this paragraph (c), you must do all the following things for the model years when you are delaying compliance with the otherwise applicable standards:

(i) Produce engines that meet all the emission standards and other requirements under 40 CFR part 89 applicable for that model year, except as noted in this paragraph (c).

(ii) Meet the labeling requirements in 40 CFR 89.110, but use the following compliance statement instead of the compliance statement in 40 CFR 89.110(b)(10): ''THIS ENGINE COMPLIES WITH U.S. EPA REGULATIONS FOR [CURRENT MODEL YEAR] NONROAD COMPRESSION-IGNITION ENGINES UNDER 40 CFR 1039.104(c).''.

(iii) Notify the equipment manufacturer that the engines you produce under this section are excluded from the production volumes associated with the equipment-manufacturer allowance program in § 1039.625.

(5) For engines in the 19–56 kW power category, if you delay compliance with any standards under this paragraph (c), you must do all the following things for the model years when you are delaying compliance with the otherwise applicable standards:

(i) Produce engines in those model years that meet all the emission standards and other requirements that applied for your model year 2008 engines in the same power category.

(ii) Meet the labeling requirements in § 1039.135, but use the following compliance statement instead of the compliance statement in § 1039.135: ''THIS ENGINE COMPLIES WITH U.S. EPA REGULATIONS FOR [CURRENT MODEL YEAR] NONROAD COMPRESSION-IGNITION ENGINES UNDER 40 CFR 1039.104(c).''.

(iii) Notify the equipment manufacturer that the engines you produce under this section are excluded from the production volumes associated with the equipment-manufacturer allowance program in § 1039.625.

(6) The provisions of this paragraph (c) may not be used to circumvent the requirements of this part.

(d) *Deficiencies for NTE standards.* You may ask us to accept as compliant an engine that does not fully meet specific requirements under the applicable NTE standards. Such deficiencies are intended to allow for minor deviations from the NTE standards under limited conditions. We expect your engines to have functioning emission-control hardware that allows you to comply with the NTE standards.

(1) Request our approval for specific deficiencies in your application for certification, or before you submit your application. We will not approve deficiencies retroactively to cover engines already certified. In your request, identify the scope of each deficiency and describe any auxiliary emission-control devices you will use to control emissions to the lowest practical level, considering the deficiency you are requesting.

(2) We will approve a deficiency only if compliance would be infeasible or unreasonable considering such factors as the technical feasibility of the given hardware and the applicable lead time and production cycles—including schedules related to phase-in or phase-out of engines. We may consider other relevant factors.

(3) Our approval applies only for a single model year and may be limited to specific engine configurations. We may approve your request for the same deficiency in the following model year if correcting the deficiency would require unreasonable hardware or software modifications and we determine that you have demonstrated an acceptable level of effort toward complying.

(4) You may ask for any number of deficiencies in the first three model years during which NTE standards apply for your engines. For the next four model years, we may approve up to three deficiencies per engine family. Deficiencies of the same type that apply similarly to different power ratings within a family count as one deficiency per family. We may condition approval of any such additional deficiencies during these four years on any additional conditions we determine to be appropriate. We will not approve deficiencies after the seven-year period specified in this paragraph (d)(4).

(e) *Diesel test fuels and corresponding labeling requirements.* For diesel-fueled engines in 2011 and later model years,

the diesel test fuel is ultra low-sulfur diesel fuel specified in 40 CFR part 1065. For diesel-fueled engines in 2010 and earlier model years, use test fuels and meet labeling requirements as follows:

(1) Use the following test fuels in 2010 and earlier model years:

(i) Unless otherwise specified, the diesel test fuel is low-sulfur diesel fuel specified in 40 CFR part 1065.

(ii) In model years 2007 through 2010, you may use ultra low-sulfur diesel fuel as the test fuel for any engine family that employs sulfur-sensitive technology if you can demonstrate that in-use engines in the family will use diesel fuel with a sulfur concentration no greater than 15 ppm.

(iii) You may use ultra low-sulfur diesel fuel as the test fuel for engine families in any power category below 56 kW, as long as none of the engines in your engine family employ sulfur-sensitive technologies, you ensure that ultimate purchasers of equipment using these engines are informed that ultra low-sulfur diesel fuel is recommended, and you recommend to equipment manufacturers that a label be applied at the fuel inlet recommending 15 ppm fuel.

(iv) For the engines described in §1039.101(c) that are certified to the 0.60 g/kW-hr PM standard in Table 1 of §1039.102 in the 2010 model year, you may test with the ultra low-sulfur fuel specified in 40 CFR part 1065.

(2) Meet the labeling requirements of this paragraph (e)(2) (or other labeling requirements we approve) to identify the applicable test fuels specified in paragraph (e)(1) of this section. Provide instructions to equipment manufacturers to ensure that they are aware of these labeling requirements.

(i) For engines certified under the provisions of paragraph (e)(1)(i) of this section, include the following statement on the emission control information label and the fuel-inlet label specified in §1039.135: ''LOW SULFUR FUEL OR ULTRA LOW SULFUR FUEL ONLY''.

(ii) For engines certified under the provisions of paragraph (e)(1)(ii) of this section, include the following statement on the emission control information label and the fuel-inlet label specified in §1039.135: ''ULTRA LOW SULFUR FUEL ONLY''.

(iii) For engines certified under the provisions of paragraph (e)(1)(iii) of this section, include the following statement on the emission control information label specified in §1039.135: ''ULTRA LOW SULFUR FUEL RECOMMENDED''.

(3) For model years 2010 and earlier, we will use the test fuel that you use under paragraph (e)(1) of this section, subject to the conditions of paragraph (e)(1) of this section.

(f) *Requirements for equipment manufacturers.* If you produce equipment with engines certified to Tier 3 standards under Option #2 of Table 3 of §1039.102 during model years from 2008 through 2011, then a minimum number of pieces of equipment you produce using 2012 model year engines must have engines certified to the Option #2 standards, as follows:

(1) For equipment you produce with 2012 model year engines at or above 37 kW and below 56 kW, determine the minimum number of these engines that must be certified to the Option #2 standards in Table 3 of §1039.102 as follows:

(i) If all the equipment you produce using 2008 through 2011 model year engines use engines certified to Tier 3 standards under Option #2 of Table 3 of §1039.102, then all the 2012 model year engines you install must be certified to the Option #2 standards of Table 3 of §1039.102.

(ii) If you produce equipment using 2008 through 2011 model year engines with some engines certified to Option #1 standards of Table 3 of §1039.102 and some engines certified to Tier 3 standards under Option #2 standards of Table 3 of §1039.102, calculate the minimum number of 2012 model year engines you must install that are certified to the Option #2 standards of Table 3 of §1039.102 from the following equation:

$$\text{Minimum number} = [(T\text{-}O_1 - F)/(T - F) - 0.05] \times P$$

Where:

T = The total number of 2008–2010 model year engines at or above 37 kW and below 56 kW that you use in equipment you produce.

O_1 = The number of engines from the 2008–2010 model years certified under Option #1

of Table 3 of § 1039.102 that you use in equipment you produce.

F = The number of 2008–2010 model year engines at or above 37 kW and below 56 kW that you use in equipment you produce under the flexibility provisions of § 1039.625.

P = The total number of 2012 model year engines at or above 37 kW and below 56 kW that you use in equipment you produce.

(2) As needed for the calculation required by this paragraph (f), keep records of all equipment you produce using 2008–2012 model year engines at or above 37 kW and below 56 kW. If you fail to keep these records, you may not use any 2012 model year engines certified to Option #1 standards in your equipment.

(3) If you fail to comply with the provisions of this paragraph (f), then using 2012 model year engines certified under Option #1 of Table 3 of § 1039.102 (or certified to less stringent standards) in such equipment violates the prohibitions in § 1068.101(a)(1).

(g) *Alternate FEL caps.* You may certify a limited number of engines from your U.S.-directed production volume to the FEL caps in Table 1 of this section instead of the otherwise applicable FEL caps in § 1039.101(d)(1), § 1039.102(e), or § 1039.102(g)(2), subject to the following provisions:

(1) The provisions of this paragraph (g) apply during the model years shown in Table 1 of this section. During this period, the number of engines certified to the FEL caps in Table 1 of this section must not exceed 20 percent in any single model year in each power category. The sum of percentages over the four-year period must not exceed a total of 40 percent in each power category. If you certify an engine under an alternate FEL cap in this paragraph (g) for any pollutant, count it toward the allowed percentage of engines certified to the alternate FEL caps.

(2) If your engine is not certified to transient emission standards under the provisions of § 1039.102(a)(1)(iii), you must adjust your FEL upward by a temporary compliance adjustment factor (TCAF) before calculating your negative emission credits under § 1039.705, as follows:

(i) The temporary compliance adjustment factor for NO_X is 1.1.

(ii) The temporary compliance adjustment factor for PM is 1.5.

(iii) The adjusted FEL (FEL_{adj}) for calculating emission credits is determined from the steady-state FEL (FEL_{ss}) using the following equation:

$$FEL_{adj} = (FEL_{ss}) \times (TCAF)$$

(iv) The unadjusted FEL (FEL_{ss}) applies for all purposes other than credit calculation.

(3) These alternate FEL caps may not be used for phase-in engines.

(4) Do not apply TCAFs to gaseous emissions for phase-out engines that you certify to the same numerical standards (and FELs if the engines are certified using ABT) for gaseous pollutants as you certified under the Tier 3 requirements of 40 CFR part 89.

TABLE 1 OF § 1039.104—ALTERNATE FEL CAPS

Maximum engine power	PM FEL cap, g/kW-hr	Model years for the alternate PM FEL cap	NO_X FEL cap, g/kW-hr	Model years for the alternate NO_X FEL cap
19 ≤ kW < 56	0.30	[1] 2012–2015	.....	.....
56 ≤ kW < 130 [2]	0.30	[3] 2012–2015	3.8	[3] 2014–2015
130 ≤ kW ≤ 560	0.20	2011–2014	3.8	2014
kW > 560 [4]	0.10	2015–2018	3.5	2015–2018

[1] For manufacturers certifying engines under Option #1 of Table 3 of § 1039.102, these alternate FEL caps apply for model years from 2013 through 2016.

[2] For engines below 75 kW, the FEL caps are 0.40 g/kW-hr for PM emissions and 4.4 g/kW-hr for NO_X emissions.

[3] For engines certified under the provisions of § 1039.102(d)(2) or (e)(1)(ii), the alternate NO_X FEL cap in the table applies only for the 2015 model year.

[4] For engines above 560 kW, the provision for alternate NO_X FEL caps is limited to generator-set engines. For example, if you produce 1,000 generator-set engines above 560 kW in 2015, up to 200 of them may be certified to the alternate NO_X FEL caps.

[69 FR 39213, June 29, 2004, as amended at 70 FR 40462, July 13, 2005]

§ 1039.105 What smoke standards must my engines meet?

(a) The smoke standards in this section apply to all engines subject to emission standards under this part, except for the following engines:

(1) Single-cylinder engines.

(2) Constant-speed engines.

(3) Engines certified to a PM emission standard or FEL of 0.07 g/kW-hr or lower.

(b) Measure smoke as specified in § 1039.501(c). Smoke from your engines may not exceed the following standards:

(1) 20 percent during the acceleration mode.

(2) 15 percent during the lugging mode.

(3) 50 percent during the peaks in either the acceleration or lugging modes.

§ 1039.107 What evaporative emission standards and requirements apply?

There are no evaporative emission standards for diesel-fueled engines, or engines using other nonvolatile or nonliquid fuels (for example, natural gas). If your engine uses a volatile liquid fuel, such as methanol, you must meet the evaporative emission requirements of 40 CFR part 1048 that apply to spark-ignition engines, as follows:

(a) Follow the steps in 40 CFR 1048.245 to show that you meet the requirements of 40 CFR 1048.105.

(b) Do the following things in your application for certification:

(1) Describe how your engines control evaporative emissions.

(2) Present test data to show that equipment using your engines meets the evaporative emission standards we specify in this section if you do not use design-based certification under 40 CFR 1048.245. Show these figures before and after applying deterioration factors, where applicable.

§ 1039.110 [Reserved]

§ 1039.115 What other requirements must my engines meet?

Engines subject to this part must meet the following requirements, except as noted elsewhere in this part:

(a) *Crankcase emissions.* Crankcase emissions may not be discharged directly into the ambient atmosphere from any engine, except as follows:

(1) Engines may discharge crankcase emissions to the ambient atmosphere if the emissions are added to the exhaust emissions (either physically or mathematically) during all emission testing.

(2) If you take advantage of this exception, you must do the following things:

(i) Manufacture the engines so that all crankcase emissions can be routed into the applicable sampling systems specified in 40 CFR part 1065.

(ii) Account for deterioration in crankcase emissions when determining exhaust deterioration factors.

(3) For purposes of this paragraph (a), crankcase emissions that are routed to the exhaust upstream of exhaust aftertreatment during all operation are not considered to be discharged directly into the ambient atmosphere.

(b)–(d) [Reserved]

(e) *Adjustable parameters.* Engines that have adjustable parameters must meet all the requirements of this part for any adjustment in the physically adjustable range. An operating parameter is not considered adjustable if you permanently seal it or if it is not normally accessible using ordinary tools. We may require that you set adjustable parameters to any specification within the adjustable range during any testing, including certification testing, selective enforcement auditing, or in-use testing.

(f) *Prohibited controls.* You may not design your engines with emission-control devices, systems, or elements of design that cause or contribute to an unreasonable risk to public health, welfare, or safety while operating. For example, this would apply if the engine emits a noxious or toxic substance it would otherwise not emit that contributes to such an unreasonable risk.

(g) *Defeat devices.* You may not equip your engines with a defeat device. A defeat device is an auxiliary emission-control device that reduces the effectiveness of emission controls under conditions that the engine may reasonably be expected to encounter during normal operation and use. This does not apply to auxiliary-emission control

devices you identify in your certification application if any of the following is true:

(1) The conditions of concern were substantially included in the applicable test procedures described in subpart F of this part.

(2) You show your design is necessary to prevent engine (or equipment) damage or accidents.

(3) The reduced effectiveness applies only to starting the engine.

§ 1039.120 What emission-related warranty requirements apply to me?

(a) *General requirements.* You must warrant to the ultimate purchaser and each subsequent purchaser that the new nonroad engine, including all parts of its emission-control system, meets two conditions:

(1) It is designed, built, and equipped so it conforms at the time of sale to the ultimate purchaser with the requirements of this part.

(2) It is free from defects in materials and workmanship that may keep it from meeting these requirements.

(b) *Warranty period.* Your emission-related warranty must be valid for at least as long as the minimum warranty periods listed in this paragraph (b) in hours of operation and years, whichever comes first. You may offer an emission-related warranty more generous than we require. The emission-related warranty for the engine may not be shorter than any published warranty you offer without charge for the engine. Similarly, the emission-related warranty for any component may not be shorter than any published warranty you offer without charge for that component. If an engine has no hour meter, we base the warranty periods in this paragraph (b) only on the engine's age (in years). The warranty period begins when the engine is placed into service. The minimum warranty periods are shown in the following table:

If your engine is certified as . . .	And its maximum power is . . .	And its rated speed is . . .	Then its warranty period is . . .
Variable speed or constant speed.	kW < 19	Any speed	1,500 hours or two years, whichever comes first.
Constant speed	19 ≤ kW < 37	3,000 rpm or higher	1,500 hours or two years, whichever comes first.
Constant speed	19 ≤ kW < 37	Less than 3,000 rpm	3,000 hours or five years, whichever comes first.
Variable speed	19 ≤ kW < 37	Any speed	3,000 hours or five years, whichever comes first.
Variable speed or constant speed.	kW ≥ 37	Any speed	3,000 hours or five years, whichever comes first.

(c) *Components covered.* The emission-related warranty covers all components whose failure would increase an engine's emissions of any pollutant. This includes components listed in 40 CFR part 1068, Appendix I, and components from any other system you develop to control emissions. The emission-related warranty covers these components even if another company produces the component. Your emission-related warranty does not cover components whose failure would not increase an engine's emissions of any pollutant.

(d) *Limited applicability.* You may deny warranty claims under this section if the operator caused the problem through improper maintenance or use, as described in 40 CFR 1068.115.

(e) *Owners manual.* Describe in the owners manual the emission-related warranty provisions from this section that apply to the engine.

[69 FR 39213, June 29, 2004, as amended at 70 FR 40463, July 13, 2005]

§ 1039.125 What maintenance instructions must I give to buyers?

Give the ultimate purchaser of each new nonroad engine written instructions for properly maintaining and using the engine, including the emission-control system. The maintenance instructions also apply to service accumulation on your emission-data engines, as described in § 1039.245 and in 40 CFR part 1065.

(a) *Critical emission-related maintenance.* Critical emission-related maintenance includes any adjustment, cleaning, repair, or replacement of critical emission-related components. This may also include additional emission-related maintenance that you determine is critical if we approve it in advance. You may schedule critical emission-related maintenance on these components if you meet the following conditions:

(1) You demonstrate that the maintenance is reasonably likely to be done at the recommended intervals on in-use engines. We will accept scheduled maintenance as reasonably likely to occur if you satisfy any of the following conditions:

(i) You present data showing that, if a lack of maintenance increases emissions, it also unacceptably degrades the engine's performance.

(ii) You present survey data showing that at least 80 percent of engines in the field get the maintenance you specify at the recommended intervals.

(iii) You provide the maintenance free of charge and clearly say so in maintenance instructions for the customer.

(iv) You otherwise show us that the maintenance is reasonably likely to be done at the recommended intervals.

(2) For engines below 130 kW, you may not schedule critical emission-related maintenance more frequently than the following minimum intervals, except as specified in paragraphs (a)(4), (b), and (c) of this section:

(i) For EGR-related filters and coolers, PCV valves, and fuel injector tips (cleaning only), the minimum interval is 1,500 hours.

(ii) For the following components, including associated sensors and actuators, the minimum interval is 3000 hours: fuel injectors, turbochargers, catalytic converters, electronic control units, particulate traps, trap oxidizers, components related to particulate traps and trap oxidizers, EGR systems (including related components, but excluding filters and coolers), and other add-on components. For particulate traps, trap oxidizers, and components related to either of these, maintenance is limited to cleaning and repair only.

(3) For engines at or above 130 kW, you may not schedule critical emission-related maintenance more frequently than the following minimum intervals, except as specified in paragraphs (a)(4), (b), and (c) of this section:

(i) For EGR-related filters and coolers, PCV valves, and fuel injector tips (cleaning only), the minimum interval is 1,500 hours.

(ii) For the following components, including associated sensors and actuators, the minimum interval is 4500 hours: fuel injectors, turbochargers, catalytic converters, electronic control units, particulate traps, trap oxidizers, components related to particulate traps and trap oxidizers, EGR systems (including related components, but excluding filters and coolers), and other add-on components. For particulate traps, trap oxidizers, and components related to either of these, maintenance is limited to cleaning and repair only.

(4) If your engine family has an alternate useful life under § 1039.101(g) that is shorter than the period specified in paragraph (a)(2) or (a)(3) of this section, you may not schedule critical emission-related maintenance more frequently than the alternate useful life, except as specified in paragraph (c) of this section.

(b) *Recommended additional maintenance.* You may recommend any additional amount of maintenance on the components listed in paragraph (a) of this section, as long as you state clearly that these maintenance steps are not necessary to keep the emission-related warranty valid. If operators do the maintenance specified in paragraph (a) of this section, but not the recommended additional maintenance, this does not allow you to disqualify those engines from in-use testing or deny a warranty claim. Do not take these maintenance steps during service accumulation on your emission-data engines.

(c) *Special maintenance.* You may specify more frequent maintenance to address problems related to special situations, such as atypical engine operation. You must clearly state that this additional maintenance is associated with the special situation you are addressing.

(d) *Noncritical emission-related maintenance.* You may schedule any amount of emission-related inspection or maintenance that is not covered by paragraph (a) of this section, as long as you state in the owners manual that these steps are not necessary to keep the emission-related warranty valid. If operators fail to do this maintenance, this does not allow you to disqualify those engines from in-use testing or deny a warranty claim. Do not take these inspection or maintenance steps during service accumulation on your emission-data engines.

(e) *Maintenance that is not emission-related.* For maintenance unrelated to emission controls, you may schedule any amount of inspection or maintenance. You may also take these inspection or maintenance steps during service accumulation on your emission-data engines, as long as they are reasonable and technologically necessary. This might include adding engine oil, changing air, fuel, or oil filters, servicing engine-cooling systems, and adjusting idle speed, governor, engine bolt torque, valve lash, or injector lash. You may perform this nonemission-related maintenance on emission-data engines at the least frequent intervals that you recommend to the ultimate purchaser (but not the intervals recommended for severe service).

(f) *Source of parts and repairs.* State clearly on the first page of your written maintenance instructions that a repair shop or person of the owner's choosing may maintain, replace, or repair emission-control devices and systems. Your instructions may not require components or service identified by brand, trade, or corporate name. Also, do not directly or indirectly condition your warranty on a requirement that the equipment be serviced by your franchised dealers or any other service establishments with which you have a commercial relationship. You may disregard the requirements in this paragraph (f) if you do one of two things:

(1) Provide a component or service without charge under the purchase agreement.

(2) Get us to waive this prohibition in the public's interest by convincing us the engine will work properly only with the identified component or service.

(g) *Payment for scheduled maintenance.* Owners are responsible for properly maintaining their engines. This generally includes paying for scheduled maintenance. However, manufacturers must pay for scheduled maintenance during the useful life if it meets all the following criteria:

(1) Each affected component was not in general use on similar engines before the applicable dates shown in paragraph (6) of the definition of *new nonroad engine* in § 1039.801.

(2) The primary function of each affected component is to reduce emissions.

(3) The cost of the scheduled maintenance is more than 2 percent of the price of the engine.

(4) Failure to perform the maintenance would not cause clear problems that would significantly degrade the engine's performance.

(h) *Owners manual.* Explain the owner's responsibility for proper maintenance in the owners manual.

[69 FR 39213, June 29, 2004, as amended at 70 FR 40463, July 13, 2005]

§ 1039.130 What installation instructions must I give to equipment manufacturers?

(a) If you sell an engine for someone else to install in a piece of nonroad equipment, give the engine installer instructions for installing it consistent with the requirements of this part. Include all information necessary to ensure that an engine will be installed in its certified configuration.

(b) Make sure these instructions have the following information:

(1) Include the heading: ''Emission-related installation instructions''.

(2) State: ''Failing to follow these instructions when installing a certified engine in a piece of nonroad equipment violates federal law (40 CFR 1068.105(b)), subject to fines or other penalties as described in the Clean Air Act.''.

(3) Describe the instructions needed to properly install the exhaust system and any other components. Include instructions consistent with the requirements of § 1039.205(u).

(4) [Reserved]

(5) Describe any limits on the range of applications needed to ensure that the engine operates consistently with your application for certification. For example, if your engines are certified only for constant-speed operation, tell equipment manufacturers not to install the engines in variable-speed applications.

(6) Describe any other instructions to make sure the installed engine will operate according to design specifications in your application for certification. This may include, for example, instructions for installing aftertreatment devices when installing the engines.

(7) State: ''If you install the engine in a way that makes the engine's emission control information label hard to read during normal engine maintenance, you must place a duplicate label on the equipment, as described in 40 CFR 1068.105.''.

(8) Describe equipment-labeling requirements consistent with § 1039.135. State whether you are providing the label for the fuel inlet or the equipment manufacturer must provide the label.

(c) You do not need installation instructions for engines you install in your own equipment.

(d) Provide instructions in writing or in an equivalent format. For example, you may post instructions on a publicly available website for downloading or printing. If you do not provide the instructions in writing, explain in your application for certification how you will ensure that each installer is informed of the installation requirements.

[69 FR 39213, June 29, 2004, as amended at 70 FR 40463, July 13, 2005]

§ 1039.135 How must I label and identify the engines I produce?

(a) Assign each engine a unique identification number and permanently affix, engrave, or stamp it on the engine in a legible way.

(b) At the time of manufacture, affix a permanent and legible label identifying each engine. The label must be—

(1) Attached in one piece so it is not removable without being destroyed or defaced. However, you may use two-piece labels for engines below 19 kW if there is not enough space on the engine to apply a one-piece label.

(2) Secured to a part of the engine needed for normal operation and not normally requiring replacement.

(3) Durable and readable for the engine's entire life.

(4) Written in English.

(c) The label must—

(1) Include the heading ''EMISSION CONTROL INFORMATION''.

(2) Include your full corporate name and trademark. You may identify another company and use its trademark instead of yours if you comply with the provisions of § 1039.640.

(3) Include EPA's standardized designation for the engine family (and subfamily, where applicable).

(4) State the power category or subcategory from § 1039.101 or § 1039.102 that determines the applicable emission standards for the engine family.

(5) State the engine's displacement (in liters); however, you may omit this from the label if all the engines in the engine family have the same per-cylinder displacement and total displacement.

(6) State the date of manufacture [MONTH and YEAR]. You may omit this from the label if you keep a record of the engine-manufacture dates and provide it to us upon request.

(7) State the FELs to which the engines are certified if certification depends on the ABT provisions of subpart H of this part.

(8) Identify the emission-control system. Use terms and abbreviations consistent with SAE J1930 (incorporated by reference in § 1039.810). You may omit this information from the label if there is not enough room for it and you put it in the owners manual instead.

(9) For diesel-fueled engines, unless otherwise specified in § 1039.104(e)(2), state: ''ULTRA LOW SULFUR FUEL ONLY'.

(10) Identify any additional requirements for fuel and lubricants that do not involve fuel-sulfur levels. You may omit this information from the label if there is not enough room for it and you put it in the owners manual instead.

(11) State the useful life for your engine family if we approve a shortened useful life under § 1039.101(g)(2).

(12) State: ''THIS ENGINE COMPLIES WITH U.S. EPA REGULATIONS FOR [MODEL YEAR] NONROAD DIESEL ENGINES.''.

(13) For engines above 560 kW, include the following things:

(i) For engines certified to the emission standards for generator-set engines, add the phrase ''FOR GENERATOR SETS AND OTHER APPLICATIONS''.

(ii) For all other engines, add the phrase ''NOT FOR USE IN A GENERATOR SET''.

(14) If your engines are certified only for constant-speed operation, state ''USE IN CONSTANT-SPEED APPLICATIONS ONLY''.

(d) You may add information to the emission control information label to identify other emission standards that the engine meets or does not meet (such as European standards). You may also add other information to ensure that the engine will be properly maintained and used.

(e) Except as specified in § 1039.104(e)(2), create a separate label with the statement: ''ULTRA LOW SULFUR FUEL ONLY''. Permanently attach this label to the equipment near the fuel inlet or, if you do not manufacture the equipment, take one of the following steps to ensure that the equipment will be properly labeled:

(1) Provide the label to the equipment manufacturer and include the appropriate information in the emission-related installation instructions.

(2) Confirm that the equipment manufacturers install their own complying labels.

(f) You may ask us to approve modified labeling requirements in this part 1039 if you show that it is necessary or appropriate. We will approve your request if your alternate label is consistent with the requirements of this part.

(g) If you obscure the engine label while installing the engine in the equipment, you must place a duplicate label on the equipment. If others install your engine in their equipment in a way that obscures the engine label, we require them to add a duplicate label on the equipment (see 40 CFR 1068.105); in that case, give them the number of duplicate labels they request and keep the following records for at least five years:

(1) Written documentation of the request from the equipment manufacturer.

(2) The number of duplicate labels you send and the date you sent them.

§ 1039.140 What is my engine's maximum engine power?

(a) An engine configuration's maximum engine power is the maximum brake power point on the nominal power curve for the engine configuration, as defined in this section. Round the power value to the nearest whole kilowatt.

(b) The nominal power curve of an engine configuration is the relationship between maximum available engine brake power and engine speed for an engine, using the mapping procedures of 40 CFR part 1065, based on the manufacturer's design and production specifications for the engine. This information may also be expressed by a torque curve that relates maximum available engine torque with engine speed.

(c) The nominal power curve must be within the range of the actual power curves of production engines considering normal production variability. If after production begins it is determined that your nominal power curve does not represent production engines, we may require you to amend your application for certification under § 1039.225.

(d) Throughout this part, references to a specific power value or a range of power values for an engine are based on maximum engine power. For example, the group of engines with maximum engine power above 560 kW may be referred to as engines above 560 kW.

Subpart C—Certifying Engine Families

§ 1039.201 What are the general requirements for obtaining a certificate of conformity?

(a) You must send us a separate application for a certificate of conformity for each engine family. A certificate of conformity is valid from the indicated effective date until December

31 of the model year for which it is issued.

(b) The application must contain all the information required by this part and must not include false or incomplete statements or information (see § 1039.255).

(c) We may ask you to include less information than we specify in this subpart, as long as you maintain all the information required by § 1039.250.

(d) You must use good engineering judgment for all decisions related to your application (see 40 CFR 1068.5).

(e) An authorized representative of your company must approve and sign the application.

(f) See § 1039.255 for provisions describing how we will process your application.

(g) We may require you to deliver your test engines to a facility we designate for our testing (see § 1039.235(c)).

§ 1039.205 What must I include in my application?

This section specifies the information that must be in your application, unless we ask you to include less information under § 1039.201(c). We may require you to provide additional information to evaluate your application.

(a) Describe the engine family's specifications and other basic parameters of the engine's design and emission controls. List the fuel type on which your engines are designed to operate (for example, ultra low-sulfur diesel fuel). List each distinguishable engine configuration in the engine family. For each engine configuration, list the maximum engine power and the range of values for maximum engine power resulting from production tolerances, as described in § 1039.140.

(b) Explain how the emission-control system operates. Describe in detail all system components for controlling exhaust emissions, including all auxiliary-emission control devices (AECDs) and all fuel-system components you will install on any production or test engine. Identify the part number of each component you describe. For this paragraph (b), treat as separate AECDs any devices that modulate or activate differently from each other. Include all the following:

(1) Give a general overview of the engine, the emission-control strategies, and all AECDs.

(2) Describe each AECD's general purpose and function.

(3) Identify the parameters that each AECD senses (including measuring, estimating, calculating, or empirically deriving the values). Include equipment-based parameters and state whether you simulate them during testing with the applicable procedures.

(4) Describe the purpose for sensing each parameter.

(5) Identify the location of each sensor the AECD uses.

(6) Identify the threshold values for the sensed parameters that activate the AECD.

(7) Describe the parameters that the AECD modulates (controls) in response to any sensed parameters, including the range of modulation for each parameter, the relationship between the sensed parameters and the controlled parameters and how the modulation achieves the AECD's stated purpose. Use graphs and tables, as necessary.

(8) Describe each AECD's specific calibration details. This may be in the form of data tables, graphical representations, or some other description.

(9) Describe the hierarchy among the AECDs when multiple AECDs sense or modulate the same parameter. Describe whether the strategies interact in a comparative or additive manner and identify which AECD takes precedence in responding, if applicable.

(10) Explain the extent to which the AECD is included in the applicable test procedures specified in subpart F of this part.

(11) Do the following additional things for AECDs designed to protect engines or equipment:

(i) Identify the engine and/or equipment design limits that make protection necessary and describe any damage that would occur without the AECD.

(ii) Describe how each sensed parameter relates to the protected components' design limits or those operating conditions that cause the need for protection.

(iii) Describe the relationship between the design limits/parameters being protected and the parameters

sensed or calculated as surrogates for those design limits/parameters, if applicable.

(iv) Describe how the modulation by the AECD prevents engines and/or equipment from exceeding design limits.

(v) Explain why it is necessary to estimate any parameters instead of measuring them directly and describe how the AECD calculates the estimated value, if applicable.

(vi) Describe how you calibrate the AECD modulation to activate only during conditions related to the stated need to protect components and only as needed to sufficiently protect those components in a way that minimizes the emission impact.

(c) [Reserved]

(d) Describe the engines you selected for testing and the reasons for selecting them.

(e) Describe the test equipment and procedures that you used, including any special or alternate test procedures you used (see § 1039.501).

(f) Describe how you operated the emission-data engine before testing, including the duty cycle and the number of engine operating hours used to stabilize emission levels. Explain why you selected the method of service accumulation. Describe any scheduled maintenance you did.

(g) List the specifications of the test fuel to show that it falls within the required ranges we specify in 40 CFR part 1065.

(h) Identify the engine family's useful life.

(i) Include the maintenance instructions you will give to the ultimate purchaser of each new nonroad engine (see § 1039.125).

(j) Include the emission-related installation instructions you will provide if someone else installs your engines in a piece of nonroad equipment (see § 1039.130).

(k) Describe your emission control information label (see § 1039.135).

(l) Identify the emission standards or FELs to which you are certifying engines in the engine family. Identify the ambient operating regions that will apply for NTE testing under § 1039.101(e)(4).

(m) Identify the engine family's deterioration factors and describe how you developed them (see § 1039.245). Present any emission test data you used for this.

(n) State that you operated your emission-data engines as described in the application (including the test procedures, test parameters, and test fuels) to show you meet the requirements of this part.

(o) Present emission data for hydrocarbons (such as NMHC or THCE, as applicable), NO_X, PM, and C_O on an emission-data engine to show your engines meet the applicable duty-cycle emission standards we specify in § 1039.101. Show emission data figures before and after applying adjustment factors for regeneration and deterioration factors for each engine. Present emission data to show that you meet any applicable smoke standards we specify in § 1039.105. If we specify more than one grade of any fuel type (for example, high-sulfur and low-sulfur diesel fuel), you need to submit test data only for one grade, unless the regulations of this part specify otherwise for your engine. Note that § 1039.235 allows you to submit an application in certain cases without new emission data.

(p) State that all the engines in the engine family comply with the not-to-exceed emission standards we specify in subpart B of this part for all normal operation and use when tested as specified in § 1039.515. Describe any relevant testing, engineering analysis, or other information in sufficient detail to support your statement.

(q) For engines above 560 kW, include information showing how your emission controls will function during normal in-use transient operation. For example, this might include the following:

(1) Emission data from transient testing of engines using measurement systems designed for measuring in-use emissions.

(2) Comparison of the engine design for controlling transient emissions with that from engines for which you have emission data over the transient duty cycle for certification.

(3) Detailed descriptions of control algorithms and other design parameters for controlling transient emissions.

(r) Report all test results, including those from invalid tests or from any other tests, whether or not they were conducted according to the test procedures of subpart F of this part. If you measure CO_2, report those emission levels. We may ask you to send other information to confirm that your tests were valid under the requirements of this part and 40 CFR part 1065.

(s) Describe all adjustable operating parameters (see §1039.115(e)), including production tolerances. Include the following in your description of each parameter:

(1) The nominal or recommended setting.

(2) The intended physically adjustable range.

(3) The limits or stops used to establish adjustable ranges.

(4) Information showing why the limits, stops, or other means of inhibiting adjustment are effective in preventing adjustment of parameters on in-use engines to settings outside your intended physically adjustable ranges.

(t) Provide the information to read, record, and interpret all the information broadcast by an engine's onboard computers and electronic control units. State that, upon request, you will give us any hardware, software, or tools we would need to do this. If you broadcast a surrogate parameter for torque values, you must provide us what we need to convert these into torque units. You may reference any appropriate publicly released standards that define conventions for these messages and parameters. Format your information consistent with publicly released standards.

(u) Confirm that your emission-related installation instructions specify how to ensure that sampling of exhaust emissions will be possible after engines are installed in equipment and placed in service. If this cannot be done by simply adding a 20-centimeter extension to the exhaust pipe, show how to sample exhaust emissions in a way that prevents diluting the exhaust sample with ambient air.

(v) State whether your certification is intended to include engines used in stationary applications. State whether your certification is limited for certain engines. If this is the case, describe how you will prevent use of these engines in applications for which they are not certified. This applies for engines such as the following:

(1) Constant-speed engines.

(2) Engines used for transportation refrigeration units that you certify under the provisions of §1039.645.

(3) Hand-startable engines certified under the provisions of §1039.101(c).

(4) Engines above 560 KW that are not certified to emission standards for generator-set engines.

(w) Unconditionally certify that all the engines in the engine family comply with the requirements of this part, other referenced parts of the CFR, and the Clean Air Act.

(x) Include estimates of U.S.-directed production volumes.

(y) Include the information required by other subparts of this part. For example, include the information required by §1039.725 if you participate in the ABT program.

(z) Include other applicable information, such as information specified in this part or 40 CFR part 1068 related to requests for exemptions.

[69 FR 39213, June 29, 2004, as amended at 71 FR 39185, July 11, 2006]

§1039.210 May I get preliminary approval before I complete my application?

If you send us information before you finish the application, we will review it and make any appropriate determinations, especially for questions related to engine family definitions, auxiliary emission-control devices, deterioration factors, testing for service accumulation, maintenance, and NTE deficiencies and carve-outs. Decisions made under this section are considered to be preliminary approval, subject to final review and approval. If you request preliminary approval related to the upcoming model year or the model year after that, we will make best-efforts to make the appropriate determinations as soon as practicable. We will generally not provide preliminary

approval related to a future model year more than two years ahead of time.

§ 1039.220 How do I amend the maintenance instructions in my application?

You may amend your emission-related maintenance instructions after you submit your application for certification, as long as the amended instructions remain consistent with the provisions of § 1039.125. You must send the Designated Compliance Officer a request to amend your application for certification for an engine family if you want to change the emission-related maintenance instructions in a way that could affect emissions. In your request, describe the proposed changes to the maintenance instructions. We will disapprove your request if we determine that the amended instructions are inconsistent with maintenance you performed on emission-data engines.

(a) If you are decreasing the specified maintenance, you may distribute the new maintenance instructions to your customers 30 days after we receive your request, unless we disapprove your request. We may approve a shorter time or waive this requirement.

(b) If your requested change would not decrease the specified maintenance, you may distribute the new maintenance instructions anytime after you send your request. For example, this paragraph (b) would cover adding instructions to increase the frequency of a maintenance step for engines in severe-duty applications.

(c) You need not request approval if you are making only minor corrections (such as correcting typographical mistakes), clarifying your maintenance instructions, or changing instructions for maintenance unrelated to emission control.

§ 1039.225 How do I amend my application for certification to include new or modified engines or to change an FEL?

Before we issue you a certificate of conformity, you may amend your application to include new or modified engine configurations, subject to the provisions of this section. After we have issued your certificate of conformity, you may send us an amended application requesting that we include new or modified engine configurations within the scope of the certificate, subject to the provisions of this section. You must amend your application if any changes occur with respect to any information included in your application.

(a) You must amend your application before you take either of the following actions:

(1) Add an engine (that is, an additional engine configuration) to an engine family. In this case, the engine added must be consistent with other engines in the engine family with respect to the criteria listed in § 1039.230.

(2) Change an engine already included in an engine family in a way that may affect emissions, or change any of the components you described in your application for certification. This includes production and design changes that may affect emissions any time during the engine's lifetime.

(3) Modify an FEL for an engine family, as described in paragraph (f) of this section.

(b) To amend your application for certification, send the Designated Compliance Officer the following information:

(1) Describe in detail the addition or change in the engine model or configuration you intend to make.

(2) Include engineering evaluations or data showing that the amended engine family complies with all applicable requirements. You may do this by showing that the original emission-data engine is still appropriate with respect to showing compliance of the amended family with all applicable requirements.

(3) If the original emission-data engine for the engine family is not appropriate to show compliance for the new or modified nonroad engine, include new test data showing that the new or modified nonroad engine meets the requirements of this part.

(c) We may ask for more test data or engineering evaluations. You must give us these within 30 days after we request them.

(d) For engine families already covered by a certificate of conformity, we will determine whether the existing certificate of conformity covers your

new or modified nonroad engine. You may ask for a hearing if we deny your request (see § 1039.820).

(e) For engine families already covered by a certificate of conformity, you may start producing the new or modified nonroad engine anytime after you send us your amended application, before we make a decision under paragraph (d) of this section. However, if we determine that the affected engines do not meet applicable requirements, we will notify you to cease production of the engines and may require you to recall the engines at no expense to the owner. Choosing to produce engines under this paragraph (e) is deemed to be consent to recall all engines that we determine do not meet applicable emission standards or other requirements and to remedy the nonconformity at no expense to the owner. If you do not provide information required under paragraph (c) of this section within 30 days, you must stop producing the new or modified nonroad engines.

(f) You may ask to change your FEL in the following cases:

(1) You may ask to raise your FEL after the start of production. You may not apply the higher FEL to engines you have already introduced into commerce. Use the appropriate FELs with corresponding sales volumes to calculate your average emission level, as described in subpart H of this part. In your request, you must demonstrate that you will still be able to comply with the applicable average emission standards as specified in subparts B and H of this part.

(2) You may ask to lower the FEL for your engine family after the start of production only when you have test data from production engines indicating that your engines comply with the lower FEL. You may create a separate subfamily with the lower FEL. Otherwise, you must use the higher FEL for the family to calculate your average emission level under subpart H of this part.

(3) If you change the FEL during production, you must include the new FEL on the emission control information label for all engines produced after the change.

[69 FR 39213, June 29, 2004, as amended at 70 FR 40463, July 13, 2005]

§ 1039.230 How do I select engine families?

(a) Divide your product line into families of engines that are expected to have similar emission characteristics throughout the useful life. Your engine family is limited to a single model year.

(b) Group engines in the same engine family if they are the same in all the following aspects:

(1) The combustion cycle and fuel.

(2) The cooling system (water-cooled vs. air-cooled).

(3) Method of air aspiration.

(4) Method of exhaust aftertreatment (for example, catalytic converter or particulate trap).

(5) Combustion chamber design.

(6) Bore and stroke.

(7) Number of cylinders (for engines with aftertreatment devices only).

(8) Cylinder arrangement (for engines with aftertreatment devices only).

(9) Method of control for engine operation other than governing (*i.e.*, mechanical or electronic).

(10) Power category.

(11) Numerical level of the emission standards that apply to the engine.

(c) You may subdivide a group of engines that is identical under paragraph (b) of this section into different engine families if you show the expected emission characteristics are different during the useful life.

(d) You may group engines that are not identical with respect to the things listed in paragraph (b) of this section in the same engine family if you show that their emission characteristics during the useful life will be similar.

(e) If you combine engines from different power categories into a single engine family under paragraph (d) of this section, you must certify the engine family to the more stringent set of standards from the two power categories in that model year.

§ 1039.235 What emission testing must I perform for my application for a certificate of conformity?

This section describes the emission testing you must perform to show compliance with the emission standards in § 1039.101(a) and (b) or § 1039.102(a) and (b). See § 1039.205(p) regarding emission testing related to the NTE standards.

See § 1039.240, § 1039.245, and 40 CFR part 1065, subpart E, regarding service accumulation before emission testing.

(a) Test your emission-data engines using the procedures and equipment specified in subpart F of this part.

(b) Select an emission-data engine from each engine family for testing. Select the engine configuration with the highest volume of fuel injected per cylinder per combustion cycle at the point of maximum torque—unless good engineering judgment indicates that a different engine configuration is more likely to exceed (or have emissions nearer to) an applicable emission standard or FEL. If two or more engines have the same fueling rate at maximum torque, select the one with the highest fueling rate at rated speed. In making this selection, consider all factors expected to affect emission-control performance and compliance with the standards, including emission levels of all exhaust constituents, especially NO_x and PM.

(c) We may measure emissions from any of your test engines or other engines from the engine family, as follows:

(1) We may decide to do the testing at your plant or any other facility. If we do this, you must deliver the test engine to a test facility we designate. The test engine you provide must include appropriate manifolds, aftertreatment devices, electronic control units, and other emission-related components not normally attached directly to the engine block. If we do the testing at your plant, you must schedule it as soon as possible and make available the instruments, personnel, and equipment we need.

(2) If we measure emissions on one of your test engines, the results of that testing become the official emission results for the engine. Unless we later invalidate these data, we may decide not to consider your data in determining if your engine family meets applicable requirements.

(3) Before we test one of your engines, we may set its adjustable parameters to any point within the physically adjustable ranges (see § 1039.115(e)).

(4) Before we test one of your engines, we may calibrate it within normal production tolerances for anything we do not consider an adjustable parameter.

(d) You may ask to use emission data from a previous model year instead of doing new tests, but only if all the following are true:

(1) The engine family from the previous model year differs from the current engine family only with respect to model year.

(2) The emission-data engine from the previous model year remains the appropriate emission-data engine under paragraph (b) of this section.

(3) The data show that the emission-data engine would meet all the requirements that apply to the engine family covered by the application for certification.

(e) We may require you to test a second engine of the same or different configuration in addition to the engine tested under paragraph (b) of this section.

(f) If you use an alternate test procedure under 40 CFR 1065.10 and later testing shows that such testing does not produce results that are equivalent to the procedures specified in subpart F of this part, we may reject data you generated using the alternate procedure.

§ 1039.240 How do I demonstrate that my engine family complies with exhaust emission standards?

(a) For purposes of certification, your engine family is considered in compliance with the applicable numerical emission standards in § 1039.101(a) and (b), § 1039.102(a) and (b), § 1039.104, and § 1039.105 if all emission-data engines representing that family have test results showing deteriorated emission levels at or below these standards. (Note: if you participate in the ABT program in subpart H of this part, your FELs are considered to be the applicable emission standards with which you must comply.)

(b) Your engine family is deemed not to comply if any emission-data engine representing that family has test results showing a deteriorated emission level above an applicable FEL or emission standard from § 1039.101, § 1039.102, § 1039.104, or § 1039.105 for any pollutant.

(c) To compare emission levels from the emission-data engine with the applicable emission standards, apply deterioration factors to the measured emission levels for each pollutant. Section 1039.245 specifies how to test your engine to develop deterioration factors that represent the deterioration expected in emissions over your engines' full useful life. Your deterioration factors must take into account any available data from in-use testing with similar engines. Small-volume engine manufacturers may use assigned deterioration factors that we establish. Apply deterioration factors as follows:

(1) *Additive deterioration factor for exhaust emissions.* Except as specified in paragraph (c)(2) of this section, use an additive deterioration factor for exhaust emissions. An additive deterioration factor for a pollutant is the difference between exhaust emissions at the end of the useful life and exhaust emissions at the low-hour test point. In these cases, adjust the official emission results for each tested engine at the selected test point by adding the factor to the measured emissions. If the factor is less than zero, use zero. Additive deterioration factors must be specified to one more decimal place than the applicable standard.

(2) *Multiplicative deterioration factor for exhaust emissions.* Use a multiplicative deterioration factor if good engineering judgment calls for the deterioration factor for a pollutant to be the ratio of exhaust emissions at the end of the useful life to exhaust emissions at the low-hour test point. For example, if you use aftertreatment technology that controls emissions of a pollutant proportionally to engine-out emissions, it is often appropriate to use a multiplicative deterioration factor. Adjust the official emission results for each tested engine at the selected test point by multiplying the measured emissions by the deterioration factor. If the factor is less than one, use one. A multiplicative deterioration factor may not be appropriate in cases where testing variability is significantly greater than engine-to-engine variability. Multiplicative deterioration factors must be specified to one more significant figure than the applicable standard.

(3) *Deterioration factor for smoke.* Deterioration factors for smoke are always additive, as described in paragraph (c)(1) of this section.

(4) *Deterioration factor for crankcase emissions.* If your engine vents crankcase emissions to the exhaust or to the atmosphere, you must account for crankcase emission deterioration, using good engineering judgment. You may use separate deterioration factors for crankcase emissions of each pollutant (either multiplicative or additive) or include the effects in combined deterioration factors that include exhaust and crankcase emissions together for each pollutant.

(d) Collect emission data using measurements to one more decimal place than the applicable standard. Apply the deterioration factor to the official emission result, as described in paragraph (c) of this section, then round the adjusted figure to the same number of decimal places as the emission standard. Compare the rounded emission levels to the emission standard for each emission-data engine. In the case of NO_X+NMHC standards, apply the deterioration factor to each pollutant and then add the results before rounding.

(e) For engines subject to NMHC standards, you may base compliance on total hydrocarbon (THC) emissions. Indicate in your application for certification if you are using this option. If you do, measure THC emissions and calculate NMHC emissions as 98 percent of THC emissions, as shown in the following equation:

$$NMHC = (0.98) \times (THC).$$

[69 FR 39213, June 29, 2004, as amended at 70 FR 40463, July 13, 2005]

§ 1039.245 How do I determine deterioration factors from exhaust durability testing?

Establish deterioration factors to determine whether your engines will meet emission standards for each pollutant throughout the useful life, as described in §§ 1039.101 and 1039.240. This section describes how to determine deterioration factors, either with an engineering analysis, with pre-existing test data, or with new emission measurements. If you are required to perform durability testing, see § 1039.125

for limitations on the maintenance that you may perform on your emission-data engine.

(a) You may ask us to approve deterioration factors for an engine family with established technology based on engineering analysis instead of testing. Engines certified to a NO_X+NMHC standard or FEL greater than the Tier 3 NO_X+NMHC standard described in 40 CFR 89.112 are considered to rely on established technology for gaseous emission control, except that this does not include any engines that use exhaust-gas recirculation or aftertreatment. In most cases, technologies used to meet the Tier 1 and Tier 2 emission standards would be considered to be established technology.

(b) You may ask us to approve deterioration factors for an engine family based on emission measurements from similar highway or nonroad engines if you have already given us these data for certifying the other engines in the same or earlier model years. Use good engineering judgment to decide whether the two engines are similar. We will approve your request if you show us that the emission measurements from other engines reasonably represent in-use deterioration for the engine family for which you have not yet determined deterioration factors.

(c) If you are unable to determine deterioration factors for an engine family under paragraph (a) or (b) of this section, select engines, subsystems, or components for testing. Determine deterioration factors based on service accumulation and related testing to represent the deterioration expected from in-use engines over the full useful life. You must measure emissions from the emission-data engine at least three times with evenly spaced intervals of service accumulation. You may use extrapolation to determine deterioration factors once you have established a trend of changing emissions with age for each pollutant. You may use an engine installed in nonroad equipment to accumulate service hours instead of running the engine only in the laboratory. You may perform maintenance on emission-data engines as described in § 1039.125 and 40 CFR part 1065, subpart E. Use good engineering judgment for all aspects of the effort to establish deterioration factors under this paragraph (c).

(d) Include the following information in your application for certification:

(1) If you use test data from a different engine family, explain why this is appropriate and include all the emission measurements on which you base the deterioration factor.

(2) If you determine your deterioration factors based on engineering analysis, explain why this is appropriate and include a statement that all data, analyses, evaluations, and other information you used are available for our review upon request.

(3) If you do testing to determine deterioration factors, describe the form and extent of service accumulation, including a rationale for selecting the service-accumulation period and the method you use to accumulate hours.

§ 1039.250 What records must I keep and what reports must I send to EPA?

(a) Within 30 days after the end of the model year, send the Designated Compliance Officer a report describing the following information about engines you produced during the model year:

(1) Report the total number of engines you produced in each engine family by maximum engine power, total displacement, and the type of fuel system.

(2) If you produced exempted engines under the provisions of § 1039.625, report the number of exempted engines you produced for each engine model and identify the buyer or shipping destination for each exempted engine.

(b) Organize and maintain the following records:

(1) A copy of all applications and any summary information you send us.

(2) Any of the information we specify in § 1039.205 that you were not required to include in your application.

(3) A detailed history of each emission-data engine. For each engine, describe all of the following:

(i) The emission-data engine's construction, including its origin and buildup, steps you took to ensure that it represents production engines, any components you built specially for it, and all the components you include in your application for certification.

(ii) How you accumulated engine operating hours (service accumulation), including the dates and the number of hours accumulated.

(iii) All maintenance, including modifications, parts changes, and other service, and the dates and reasons for the maintenance.

(iv) All your emission tests, including documentation on routine and standard tests, as specified in part 40 CFR part 1065, and the date and purpose of each test.

(v) All tests to diagnose engine or emission-control performance, giving the date and time of each and the reasons for the test.

(vi) Any other significant events.

(4) Production figures for each engine family divided by assembly plant.

(5) Keep a list of engine identification numbers for all the engines you produce under each certificate of conformity.

(c) Keep data from routine emission tests (such as test cell temperatures and relative humidity readings) for one year after we issue the associated certificate of conformity. Keep all other information specified in paragraph (a) of this section for eight years after we issue your certificate.

(d) Store these records in any format and on any media, as long as you can promptly send us organized, written records in English if we ask for them. You must keep these records readily available. We may review them at any time.

(e) Send us copies of any engine maintenance instructions or explanations if we ask for them.

§ 1039.255 What decisions may EPA make regarding my certificate of conformity?

(a) If we determine your application is complete and shows that the engine family meets all the requirements of this part and the Act, we will issue a certificate of conformity for your engine family for that model year. We may make the approval subject to additional conditions.

(b) We may deny your application for certification if we determine that your engine family fails to comply with emission standards or other requirements of this part or the Act. Our decision may be based on a review of all information available to us. If we deny your application, we will explain why in writing.

(c) In addition, we may deny your application or suspend or revoke your certificate if you do any of the following:

(1) Refuse to comply with any testing or reporting requirements.

(2) Submit false or incomplete information (paragraph (e) of this section applies if this is fraudulent).

(3) Render inaccurate any test data.

(4) Deny us from completing authorized activities despite our presenting a warrant or court order (see 40 CFR 1068.20). This includes a failure to provide reasonable assistance.

(5) Produce engines for importation into the United States at a location where local law prohibits us from carrying out authorized activities.

(6) Fail to supply requested information or amend your application to include all engines being produced.

(7) Take any action that otherwise circumvents the intent of the Act or this part.

(d) We may void your certificate if you do not keep the records we require or do not give us information when we ask for it.

(e) We may void your certificate if we find that you intentionally submitted false or incomplete information.

(f) If we deny your application or suspend, revoke, or void your certificate, you may ask for a hearing (see § 1039.820).

Subpart D [Reserved]

Subpart E—In-Use Testing

§ 1039.401 General provisions.

We may perform in-use testing of any engine subject to the standards of this part. However, we will limit recall testing to the first 75 percent of each engine's useful life as specified in § 1039.101(g).

Subpart F—Test Procedures

§ 1039.501 How do I run a valid emission test?

(a) Use the equipment and procedures for compression-ignition engines in 40

CFR part 1065 to determine whether engines meet the duty-cycle emission standards in § 1039.101(a) and (b). Measure the emissions of all the pollutants we regulate in § 1039.101 as specified in 40 CFR part 1065. Use the applicable duty cycles specified in §§ 1039.505 and 1039.510.

(b) Section 1039.515 describes the supplemental procedures for evaluating whether engines meet the not-to-exceed emission standards in § 1039.101(e).

(c) Measure smoke using the procedures in 40 CFR part 86, subpart I, for evaluating whether engines meet the smoke standards in § 1039.105, except that you may test two-cylinder engines with an exhaust muffler like those installed on in-use engines.

(d) Use the fuels specified in § 1039.104(e) and 40 CFR part 1065 to perform valid tests.

(1) For service accumulation, use the test fuel or any commercially available fuel that is representative of the fuel that in-use engines will use.

(2) For diesel-fueled engines, use the appropriate diesel fuel specified in 40 CFR part 1065 for emission testing. Unless we specify otherwise, the appropriate diesel test fuel is the ultra low-sulfur diesel fuel. If we allow you to use a test fuel with higher sulfur levels, identify the test fuel in your application for certification and ensure that the emission control information label is consistent with your selection of the test fuel (see § 1039.135(c)(9)). For example, do not test with ultra low-sulfur diesel fuel if you intend to label your engines to allow use of diesel fuel with sulfur concentrations up to 500 ppm.

(e) You may use special or alternate procedures to the extent we allow them under 40 CFR 1065.10.

(f) This subpart is addressed to you as a manufacturer, but it applies equally to anyone who does testing for you, and to us when we perform testing to determine if your engines meet emission standards.

[69 FR 39213, June 29, 2004, as amended at 70 FR 40463, July 13, 2005]

§ 1039.505 How do I test engines using steady-state duty cycles, including ramped-modal testing?

This section describes how to test engines under steady-state conditions. In some cases, we allow you to choose the appropriate steady-state duty cycle for an engine. In these cases, you must use the duty cycle you select in your application for certification for all testing you perform for that engine family. If we test your engines to confirm that they meet emission standards, we will use the duty cycles you select for your own testing. We may also perform other testing as allowed by the Clean Air Act.

(a) You may perform steady-state testing with either discrete-mode or ramped-modal cycles, as follows:

(1) For discrete-mode testing, sample emissions separately for each mode, then calculate an average emission level for the whole cycle using the weighting factors specified for each mode. Calculate cycle statistics for the sequence of modes and compare with the specified values in 40 CFR part 1065 to confirm that the test is valid. Operate the engine and sampling system as follows:

(i) *Engines with NO_X aftertreatment.* For engines that depend on aftertreatment to meet the NO_X emission standard, operate the engine for 5–6 minutes, then sample emissions for 1–3 minutes in each mode. You may extend the sampling time to improve measurement accuracy of PM emissions, using good engineering judgment. If you have a longer sampling time for PM emissions, calculate and validate cycle statistics separately for the gaseous and PM sampling periods.

(ii) *Engines without NO_X aftertreatment.* For other engines, operate the engine for at least 5 minutes, then sample emissions for at least 1 minute in each mode. Calculate cycle statistics for the sequence of modes and compare with the specified values in 40 CFR part 1065 to confirm that the test is valid.

(2) For ramped-modal testing, start sampling at the beginning of the first mode and continue sampling until the end of the last mode. Calculate emissions and cycle statistics the same as for transient testing.

(b) Measure emissions by testing the engine on a dynamometer with one of the following duty cycles to determine whether it meets the steady-state emission standards in § 1039.101(b):

(1) Use the 5-mode duty cycle or the corresponding ramped-modal cycle described in Appendix II of this part for constant-speed engines. Note that these cycles do not apply to all engines used in constant-speed applications, as described in § 1039.801.

(2) Use the 6-mode duty cycle or the corresponding ramped-modal cycle described in Appendix III of this part for variable-speed engines below 19 kW. You may instead use the 8-mode duty cycle or the corresponding ramped-modal cycle described in Appendix IV of this part if some engines from your engine family will be used in applications that do not involve governing to maintain engine operation around rated speed.

(3) Use the 8-mode duty cycle or the corresponding ramped-modal cycle described in Appendix IV of this part for variable-speed engines at or above 19 kW.

(c) During idle mode, operate the engine with the following parameters:

(1) Hold the speed within your specifications.

(2) Set the engine to operate at its minimum fueling rate.

(3) Keep engine torque under 5 percent of maximum test torque.

(d) For full-load operating modes, operate the engine at its maximum fueling rate. However, for constant-speed engines whose design prevents full-load operation for extended periods, you may ask for approval under 40 CFR 1065.10(c) to replace full-load operation with the maximum load for which the engine is designed to operate for extended periods.

(e) See 40 CFR part 1065 for detailed specifications of tolerances and calculations.

(f) For those cases where transient testing is not necessary, perform the steady-state test according to this section after an appropriate warm-up period, consistent with 40 CFR part 1065, subpart F.

§ 1039.510 Which duty cycles do I use for transient testing?

(a) Measure emissions by testing the engine on a dynamometer with one of the following transient duty cycles to determine whether it meets the transient emission standards in § 1039.101(a):

(1) For variable-speed engines, use the transient duty cycle described in Appendix VI of this part.

(2) [Reserved]

(b) The transient test sequence consists of an initial run through the transient duty cycle from a cold start, 20 minutes with no engine operation, then a final run through the same transient duty cycle. Start sampling emissions immediately after you start the engine. Calculate the official transient emission result from the following equation:

Official transient emission result = 0.05 × cold-start emission rate + 0.95 × hot-start emission rate.

[69 FR 39213, June 29, 2004, as amended at 70 FR 40463, July 13, 2005]

§ 1039.515 What are the test procedures related to not-to-exceed standards?

(a) *General provisions.* The provisions in 40 CFR 86.1370–2007 apply for determining whether an engine meets the not-to-exceed emission standards in § 1039.101(e). Interpret references to vehicles and vehicle operation to mean equipment and equipment operation.

(b) *Special PM zone.* For engines certified to a PM standard or FEL above 0.07 g/kW-hr, a modified NTE control area applies for PM emissions only. The speeds and loads to be excluded are determined based on speeds B and C, determined according to the provisions of 40 CFR 86.1360–2007(c). One of the following provisions applies:

(1) If the C speed is below 2400 rpm, exclude the speed and load points to the right of or below the line formed by connecting the following two points on a plot of speed-vs.-power:

(i) 30% of maximum power at the B speed; however, use the power value corresponding to the engine operation at 30% of maximum torque at the B speed if this is greater than 30% of maximum power at the B speed.

(ii) 70% of maximum power at 100% speed.

(2) If the C speed is at or above 2400 rpm, exclude the speed and load points to the right of the line formed by connecting the two points in paragraphs (b)(2)(i) and (ii) of this section (the 30% and 50% torque/power points) and

below the line formed by connecting the two points in paragraphs (b)(2)(ii) and (iii) of this section (the 50% and 70% torque/power points). The 30%, 50%, and 70% torque/power points are defined as follows:

(i) 30% of maximum power at the B speed; however, use the power value corresponding to the engine operation at 30% of maximum torque at the B speed if this is greater than 30% of maximum power at the B speed.

(ii) 50% of maximum power at 2400 rpm.

(iii) 70% of maximum power at 100% speed.

§ 1039.520 What testing must I perform to establish deterioration factors?

Sections 1039.240 and 1039.245 describe the method for testing that must be performed to establish deterioration factors for an engine family.

§ 1039.525 How do I adjust emission levels to account for infrequently regenerating aftertreatment devices?

This section describes how to adjust emission results from engines using aftertreatment technology with infrequent regeneration events. For this section, ''regeneration'' means an intended event during which emission levels change while the system restores aftertreatment performance. For example, exhaust gas temperatures may increase temporarily to remove sulfur from adsorbers or to oxidize accumulated particulate matter in a trap. For this section, ''infrequent'' refers to regeneration events that are expected to occur on average less than once over the applicable transient duty cycle or ramped-modal cycle, or on average less than once per typical mode in a discrete-mode test.

(a) *Developing adjustment factors.* Develop an upward adjustment factor and a downward adjustment factor for each pollutant based on measured emission data and observed regeneration frequency. Adjustment factors should generally apply to an entire engine family, but you may develop separate adjustment factors for different engine configurations within an engine family. If you use adjustment factors for certification, you must identify the frequency factor, F, from paragraph (b) of this section in your application for certification and use the adjustment factors in all testing for that engine family. You may use carryover or carry-across data to establish adjustment factors for an engine family, as described in § 1039.235(d), consistent with good engineering judgment. All adjustment factors for regeneration are additive. Determine adjustment factors separately for different test segments. For example, determine separate adjustment factors for hot-start and cold-start test segments and for different modes of a discrete-mode steady-state test. You may use either of the following different approaches for engines that use aftertreatment with infrequent regeneration events:

(1) You may disregard this section if regeneration does not significantly affect emission levels for an engine family (or configuration) or if it is not practical to identify when regeneration occurs. If you do not use adjustment factors under this section, your engines must meet emission standards for all testing, without regard to regeneration.

(2) If your engines use aftertreatment technology with extremely infrequent regeneration and you are unable to apply the provisions of this section, you may ask us to approve an alternate methodology to account for regeneration events.

(b) *Calculating average adjustment factors.* Calculate the average adjustment factor (EF_A) based on the following equation:

$$EF_A = (F)(EF_H) + (1-F)(EF_L)$$

Where:

F = the frequency of the regeneration event in terms of the fraction of tests during which the regeneration occurs.

EF_H = measured emissions from a test segment in which the regeneration occurs.

EF_L = measured emissions from a test segment in which the regeneration does not occur.

(c) *Applying adjustment factors.* Apply adjustment factors based on whether regeneration occurs during the test run. You must be able to identify regeneration in a way that is readily apparent during all testing.

(1) If regeneration does not occur during a test segment, add an upward

adjustment factor to the measured emission rate. Determine the upward adjustment factor (UAF) using the following equation:

$$UAF = EF_A - EF_L$$

(2) If regeneration occurs or starts to occur during a test segment, subtract a downward adjustment factor from the measured emission rate. Determine the downward adjustment factor (DAF) using the following equation:

$$DAF = EF_H - EF_A$$

(d) *Sample calculation.* If EF_L is 0.10 g/kW-hr, EF_H is 0.50 g/kW-hr, and F is 0.1 (the regeneration occurs once for each ten tests), then:

EF_A = (0.1)(0.5 g/kW-hr) + (1.0 − 0.1)(0.1 g/kW-hr) = 0.14 g/kW-hr.

UAF = 0.14 g/kW-hr − 0.10 g/kW-hr = 0.04 g/kW-hr.

DAF = 0.50 g/kW-hr − 0.14 g/kW-hr = 0.36 g/kW-hr.

Subpart G—Special Compliance Provisions

§ 1039.601 What compliance provisions apply to these engines?

Engine and equipment manufacturers, as well as owners, operators, and rebuilders of engines subject to the requirements of this part, and all other persons, must observe the provisions of this part, the requirements and prohibitions in 40 CFR part 1068, and the provisions of the Act.

§ 1039.605 What provisions apply to engines certified under the motor-vehicle program?

(a) *General provisions.* If you are an engine manufacturer, this section allows you to introduce new nonroad engines into commerce if they are already certified to the requirements that apply to compression-ignition engines under 40 CFR parts 85 and 86. If you comply with all the provisions of this section, we consider the certificate issued under 40 CFR part 86 for each engine to also be a valid certificate of conformity under this part 1039 for its model year, without a separate application for certification under the requirements of this part 1039. See § 1039.610 for similar provisions that apply to engines certified to chassis-based standards for motor vehicles.

(b) *Equipment-manufacturer provisions.* If you are not an engine manufacturer, you may produce nonroad equipment using motor-vehicle engines under this section as long as the engine has been properly labeled as specified in paragraph (d)(5) of this section and you do not make any of the changes described in paragraph (d)(2) of this section. You must also add the fuel-inlet label we specify in § 1039.135(e). If you modify the motor-vehicle engine in any of the ways described in paragraph (d)(2) of this section, we will consider you a manufacturer of a new nonroad engine. Such engine modifications prevent you from using the provisions of this section.

(c) *Liability.* Engines for which you meet the requirements of this section are exempt from all the requirements and prohibitions of this part, except for those specified in this section. Engines exempted under this section must meet all the applicable requirements from 40 CFR parts 85 and 86. This paragraph (c) applies to engine manufacturers, equipment manufacturers who use these engines, and all other persons as if these engines were used in a motor vehicle. The prohibited acts of § 1068.101(a)(1) apply to these new engines and equipment; however, we consider the certificate issued under 40 CFR part 86 for each engine to also be a valid certificate of conformity under this part 1039 for its model year. If we make a determination that these engines do not conform to the regulations during their useful life, we may require you to recall them under 40 CFR part 85 or 40 CFR 1068.505.

(d) *Specific requirements.* If you are an engine manufacturer and meet all the following criteria and requirements regarding your new nonroad engine, the engine is eligible for an exemption under this section:

(1) Your engine must be covered by a valid certificate of conformity issued under 40 CFR part 86.

(2) You must not make any changes to the certified engine that could reasonably be expected to increase its exhaust emissions for any pollutant, or its evaporative emissions if it is subject to evaporative-emission standards.

For example, if you make any of the following changes to one of these engines, you do not qualify for this exemption:

(i) Change any fuel system parameters from the certified configuration.

(ii) Change, remove, or fail to properly install any other component, element of design, or calibration specified in the engine manufacturer's application for certification. This includes aftertreatment devices and all related components.

(iii) Modify or design the engine cooling system so that temperatures or heat rejection rates are outside the original engine manufacturer's specified ranges.

(3) You must show that fewer than 50 percent of the engine model's total sales for the model year, from all companies, are used in nonroad applications, as follows:

(i) If you are the original manufacturer of the engine, base this showing on your sales information.

(ii) In all other cases, you must get the original manufacturer of the engine to confirm this based on its sales information.

(4) You must ensure that the engine has the label we require under 40 CFR part 86.

(5) You must add a permanent supplemental label to the engine in a position where it will remain clearly visible after installation in the equipment. In the supplemental label, do the following:

(i) Include the heading: ''NONROAD ENGINE EMISSION CONTROL INFORMATION''.

(ii) Include your full corporate name and trademark. You may instead include the full corporate name and trademark of another company you choose to designate.

(iii) State: ''THIS ENGINE WAS ADAPTED FOR NONROAD USE WITHOUT AFFECTING ITS EMISSION CONTROLS. THE EMISSION-CONTROL SYSTEM DEPENDS ON THE USE OF FUEL MEETING SPECIFICATIONS THAT APPLY FOR MOTOR-VEHICLE APPLICATIONS. OPERATING THE ENGINE ON OTHER FUELS MAY BE A VIOLATION OF FEDERAL LAW.''.

(iv) State the date you finished modifying the engine (month and year), if applicable.

(6) The original and supplemental labels must be readily visible after the engine is installed in the equipment or, if the equipment obscures the engine's emission control information label, the equipment manufacturer must attach duplicate labels, as described in 40 CFR 1068.105.

(7) You must make sure that nonroad equipment produced under this section will have the fueling label we specify in § 1039.135(c)(9)(i).

(8) Send the Designated Compliance Officer a signed letter by the end of each calendar year (or less often if we tell you) with all the following information:

(i) Identify your full corporate name, address, and telephone number.

(ii) List the engine models you expect to produce under this exemption in the coming year.

(iii) State: ''We produce each listed engine model for nonroad application without making any changes that could increase its certified emission levels, as described in 40 CFR 1039.605.''.

(e) *Failure to comply*. If your engines do not meet the criteria listed in paragraph (d) of this section, they will be subject to the standards, requirements, and prohibitions of this part 1039 and the certificate issued under 40 CFR part 86 will not be deemed to also be a certificate issued under this part 1039. Introducing these engines into commerce without a valid exemption or certificate of conformity under this part violates the prohibitions in 40 CFR 1068.101(a)(1).

(f) *Data submission*. We may require you to send us emission test data on any applicable nonroad duty cycles.

(g) *Participation in averaging, banking and trading.* Engines adapted for nonroad use under this section may not generate or use emission credits under this part 1039. These engines may generate credits under the ABT provisions in 40 CFR part 86. These engines must use emission credits under 40 CFR part 86 if they are certified to an FEL that exceeds an applicable standard under 40 CFR part 86.

[69 FR 39213, June 29, 2004, as amended at 70 FR 40463, July 13, 2005]

§ 1039.610 What provisions apply to vehicles certified under the motor-vehicle program?

(a) *General provisions.* If you are a motor-vehicle manufacturer, this section allows you to introduce new nonroad engines or equipment into commerce if the vehicle is already certified to the requirements that apply under 40 CFR parts 85 and 86. If you comply with all of the provisions of this section, we consider the certificate issued under 40 CFR part 86 for each motor vehicle to also be a valid certificate of conformity for the engine under this part 1039 for its model year, without a separate application for certification under the requirements of this part 1039. See § 1039.605 for similar provisions that apply to motor-vehicle engines produced for nonroad equipment.

(b) *Equipment-manufacturer provisions.* If you are not an engine manufacturer, you may produce nonroad equipment from motor vehicles under this section as long as the equipment has the labels specified in paragraph (d)(5) of this section and you do not make any of the changes described in paragraph (d)(2) of this section. You must also add the fuel-inlet label we specify in § 1039.135(e). If you modify the motor vehicle or its engine in any of the ways described in paragraph (d)(2) of this section, we will consider you a manufacturer of a new nonroad engine. Such modifications prevent you from using the provisions of this section.

(c) *Liability.* Engines, vehicles, and equipment for which you meet the requirements of this section are exempt from all the requirements and prohibitions of this part, except for those specified in this section. Engines exempted under this section must meet all the applicable requirements from 40 CFR parts 85 and 86. This applies to engine manufacturers, equipment manufacturers, and all other persons as if the nonroad equipment were motor vehicles. The prohibited acts of § 1068.101(a)(1) apply to these new pieces of equipment; however, we consider the certificate issued under 40 CFR part 86 for each motor vehicle to also be a valid certificate of conformity for the engine under this part 1039 for its model year. If we make a determination that these engines, vehicles, or equipment do not conform to the regulations during their useful life, we may require you to recall them under 40 CFR part 86 or 40 CFR 1068.505.

(d) *Specific requirements.* If you are a motor-vehicle manufacturer and meet all the following criteria and requirements regarding your new nonroad equipment and its engine, the engine is eligible for an exemption under this section:

(1) Your equipment must be covered by a valid certificate of conformity as a motor vehicle issued under 40 CFR part 86.

(2) You must not make any changes to the certified vehicle that we could reasonably expect to increase its exhaust emissions for any pollutant, or its evaporative emissions if it is subject to evaporative-emission standards. For example, if you make any of the following changes, you do not qualify for this exemption:

(i) Change any fuel system parameters from the certified configuration.

(ii) Change, remove, or fail to properly install any other component, element of design, or calibration specified in the vehicle manufacturer's application for certification. This includes aftertreatment devices and all related components.

(iii) Modify or design the engine cooling system so that temperatures or heat rejection rates are outside the original vehicle manufacturer's specified ranges.

(iv) Add more than 500 pounds to the curb weight of the originally certified motor vehicle.

(3) You must show that fewer than 50 percent of the total sales as a motor vehicle or a piece of nonroad equipment, from all companies, are used in nonroad applications, as follows:

(i) If you are the original manufacturer of the vehicle, base this showing on your sales information.

(ii) In all other cases, you must get the original manufacturer of the vehicle to confirm this based on their sales information.

(4) The equipment must have the vehicle emission control information and fuel labels we require under 40 CFR 86.007–35.

(5) You must add a permanent supplemental label to the equipment in a position where it will remain clearly visible. In the supplemental label, do the following:

(i) Include the heading: ''NONROAD ENGINE EMISSION CONTROL INFORMATION''.

(ii) Include your full corporate name and trademark. You may instead include the full corporate name and trademark of another company you choose to designate.

(iii) State: ''THIS VEHICLE WAS ADAPTED FOR NONROAD USE WITHOUT AFFECTING ITS EMISSION CONTROLS. THE EMISSION-CONTROL SYSTEM DEPENDS ON THE USE OF FUEL MEETING SPECIFICATIONS THAT APPLY FOR MOTOR-VEHICLE APPLICATIONS. OPERATING THE ENGINE ON OTHER FUELS MAY BE A VIOLATION OF FEDERAL LAW.''.

(iv) State the date you finished modifying the vehicle (month and year), if applicable.

(6) The original and supplemental labels must be readily visible in the fully assembled equipment.

(7) Send the Designated Compliance Officer a signed letter by the end of each calendar year (or less often if we tell you) with all the following information:

(i) Identify your full corporate name, address, and telephone number.

(ii) List the equipment models you expect to produce under this exemption in the coming year.

(iii) State: ''We produce each listed engine or equipment model for nonroad application without making any changes that could increase its certified emission levels, as described in 40 CFR 1039.610.''.

(e) *Failure to comply*. If your engines, vehicles, or equipment do not meet the criteria listed in paragraph (d) of this section, the engines will be subject to the standards, requirements, and prohibitions of this part 1039, and the certificate issued under 40 CFR part 86 will not be deemed to also be a certificate issued under this part 1039. Introducing these engines into commerce without a valid exemption or certificate of conformity under this part violates the prohibitions in 40 CFR 1068.101(a)(1).

(f) *Data submission*. We may require you to send us emission test data on any applicable nonroad duty cycles.

(g) *Participation in averaging, banking and trading.* Vehicles adapted for nonroad use under this section may not generate or use emission credits under this part 1039. These vehicles may generate credits under the ABT provisions in 40 CFR part 86. These vehicles must be included in the calculation of the applicable fleet average in 40 CFR part 86.

[69 FR 39213, June 29, 2004, as amended at 70 FR 40463, July 13, 2005]

§ 1039.615 What special provisions apply to engines using noncommercial fuels?

In § 1039.115(e), we generally require that engines meet emission standards for any adjustment within the full range of any adjustable parameters. For engines that use noncommercial fuels significantly different than the specified test fuel of the same type, you may ask to use the parameter-adjustment provisions of this section instead of those in § 1039.115(e). Engines certified under this section must be in a separate engine family.

(a) If we approve your request, the following provisions apply:

(1) You must certify the engine using the test fuel specified in § 1039.501.

(2) You may produce the engine without limits or stops that keep the engine adjusted within the certified range.

(3) You must specify in-use adjustments different than the adjustable settings appropriate for the specified test fuel, consistent with the provisions of paragraph (b)(1) of this section.

(b) To produce engines under this section, you must do the following:

(1) Specify in-use adjustments needed so the engine's level of emission control for each regulated pollutant is equivalent to that from the certified configuration.

(2) Add the following information to the emission control information label specified in § 1039.135:

(i) Include instructions describing how to adjust the engine to operate in a way that maintains the effectiveness of the emission-control system.

(ii) State: ''THIS ENGINE IS CERTIFIED TO OPERATE IN APPLICATIONS USING NONCOMMERCIAL FUEL. MALADJUSTMENT OF THE ENGINE IS A VIOLATION OF FEDERAL LAW SUBJECT TO CIVIL PENALTY.''.

(3) Keep records to document the destinations and quantities of engines produced under this section.

§ 1039.620 What are the provisions for exempting engines used solely for competition?

The provisions of this section apply for new engines built on or after January 1, 2006.

(a) Equipment manufacturers may use uncertified engines if the vehicles or equipment in which they are installed will be used solely for competition.

(b) The definition of nonroad engine in 40 CFR 1068.30 excludes engines used solely for competition. These engines are not required to comply with this part 1039 or 40 CFR part 89, but 40 CFR 1068.101 prohibits the use of competition engines for noncompetition purposes.

(c) We consider a vehicle or piece of equipment to be one that will be used solely for competition if it has features that are not easily removed that would make its use other than in competition unsafe, impractical, or highly unlikely.

(d) As an engine manufacturer, your engine is exempt without our prior approval if you have a written request for an exempted engine from the equipment manufacturer showing the basis for believing that the equipment will be used solely for competition. You must permanently label engines exempted under this section to clearly indicate that they are to be used solely for competition. Failure to properly label an engine will void the exemption.

(e) We may discontinue an exemption under this section if we find that engines are not used solely for competition.

§ 1039.625 What requirements apply under the program for equipment-manufacturer flexibility?

The provisions of this section allow equipment manufacturers to produce equipment with engines that are subject to less stringent emission standards after the Tier 4 emission standards begin to apply. To be eligible to use these provisions, you must follow all the instructions in this section. *See* 40 CFR 89.102(d) and (e) for provisions that apply to equipment produced while Tier 1, Tier 2, or Tier 3 standards apply. *See* § 1039.626 for requirements that apply specifically to companies that manufacture equipment outside the United States and to companies that import such equipment without manufacturing it. Engines and equipment you produce under this section are exempt from the prohibitions in 40 CFR 1068.101(a)(1), subject to the provisions of this section.

(a) *General.* If you are an equipment manufacturer, you may introduce into commerce in the United States limited numbers of nonroad equipment with engines exempted under this section. You may use the exemptions in this section only if you have primary responsibility for designing and manufacturing equipment and your manufacturing procedures include installing some engines in this equipment. Consider all U.S.-directed equipment sales in showing that you meet the requirements of this section, including those from any parent or subsidiary companies and those from any other companies you license to produce equipment for you. If you produce a type of equipment that has more than one engine, count each engine separately. These provisions are available over the following periods:

(1) These provisions are available for the years shown in the following table, except as provided in paragraph (a)(2) of this section:

TABLE 1 OF § 1039.625—GENERAL AVAILABILITY OF ALLOWANCES

Power category	Calendar years
kW < 19	2008–2014
19 ≤ kW < 56	2008–2014
56 ≤ kW < 130	2012–2018
130 ≤ kW ≤ 560	2011–2017
kW > 560	2011–2017

(2) If you do not use any allowances in a power category before the earliest dates shown in the following table, you may delay the start of the seven-year

period for using allowances under this section as follows:

TABLE 2 OF § 1039.625—AVAILABILITY OF DELAYED ALLOWANCES

Power category	Calendar years
kW < 19	
19 ≤ kW < 56	2012–2018
56 ≤ kW < 130	2014–2020
130 ≤ kW ≤ 560	2014–2020
kW > 560	2015–2021

(b) *Allowances.* You may choose one of the following options for each power category to produce equipment with exempted engines under this section, except as allowed under § 1039.627:

(1) *Percent-of-production allowances.* You may produce a certain number of units with exempted engines calculated using a percentage of your total sales within a power category relative to your total U.S.-directed production volume. The sum of these percentages within a power category during the seven-year period specified in paragraph (a) of this section may not exceed 80 percent, except as allowed under paragraph (b)(2) or (m) of this section.

(2) *Small-volume allowances.* You may determine an alternate allowance for a specific number of exempted engines under this section using one of the following approaches for your U.S.-directed production volumes:

(i) You may produce up to 700 units with exempted engines within a power category during the seven-year period specified in paragraph (a) of this section, with no more than 200 units in any single year within a power category, except as provided in paragraph (m) of this section. Engines within a power category that are exempted under this section must be from a single engine family within a given year.

(ii) For engines below 130 kW, you may produce up to 525 units with exempted engines within a power category during the seven-year period specified in paragraph (a) of this section, with no more than 150 units in any single year within a power category, except as provided in paragraph (m) of this section. For engines at or above 130 kW, you may produce up to 350 units with exempted engines within a power category during the seven-year period, with no more than 100 units in any single year within a power category. Exemptions under this paragraph (b)(2)(ii) may apply to engines from multiple engine families in a given year.

(c) *Percentage calculation.* Calculate for each calendar year the percentage of equipment with exempted engines from your total U.S.-directed production within a power category if you need to show that you meet the percent-of-production allowances in paragraph (b)(1) of this section.

(d) *Inclusion of engines not subject to Tier 4 standards.* The following provisions apply to engines that are not subject to Tier 4 standards:

(1) If you use the provisions of § 1068.105(a) to use up your inventories of engines not certified to new emission standards, do not include these units in your count of equipment with exempted engines under paragraph (b) of this section. However, you may include these units in your count of total equipment you produce for the given year for the percentage calculation in paragraph (b)(1) of this section.

(2) If you install engines that are exempted from the Tier 4 standards for any reason, other than for equipment-manufacturer allowances under this section, do not include these units in your count of exempted engines under paragraph (b) of this section. However, you may include these units in your count of total equipment you produce for the given year for the percentage calculation in paragraph (b)(1) of this section. For example, if we grant a hardship exemption for the engine manufacturer, you may count these as compliant engines under this section. This paragraph (d)(2) applies only if the engine has a permanent label describing why it is exempted from the Tier 4 standards.

(3) Do not include equipment using model year 2008 or 2009 engines certified under the provisions of § 1039.101(c) in your count of equipment using exempted engines. However, you may include these units in your count of total equipment you produce for the given year for the percentage calculation in paragraph (b)(1) of this section.

(4) You may start using the allowances under this section for engines

that are not yet subject to Tier 4 standards, as long as the seven-year period for using allowances under the Tier 2 or Tier 3 program has expired (see 40 CFR 89.102(d)). Table 3 of this section shows the years for which this applies. To use these early allowances, you must use engines that meet the emission standards described in paragraph (e) of this section. You must also count these units or calculate these percentages as described in paragraph (c) of this section and apply them toward the total number or percentage of equipment with exempted engines we allow for the Tier 4 standards as described in paragraph (b) of this section. The maximum number of cumulative early allowances under this paragraph (d)(4) is 10 percent under the percent-of-production allowance or 100 units under the small-volume allowance. For example, if you produce 5 percent of your equipment with engines between 130 and 560 kW that use allowances under this paragraph (d)(4) in 2009, you may use up to an additional 5 percent of your allowances in 2010. If you use allowances for 5 percent of your equipment in both 2009 and 2010, your 80 percent allowance for 2011–2017 in the 130–560 kW power category decreases to 70 percent. Manufacturers using allowances under this paragraph (d)(4) must comply with the notification and reporting requirements specified in paragraph (g) of this section.

TABLE 3 OF § 1039.625—YEARS FOR EARLY ALLOWANCES

Maximum engine power	Calendar years
kW < 19	2007
19 ≤ kW < 37	2006–2011
37 ≤ kW < 56	2011
56 ≤ kW < 75	2011
75 ≤ kW < 130	2010–2011
130 ≤ kW < 225	2010
225 ≤ kW < 450	2008–2010
450 ≤ kW ≤ 560	2009–2010
KW > 560	

(e) *Standards.* If you produce equipment with exempted engines under this section, the engines must meet emission standards at least as stringent as the following:

(1) If you are using the provisions of paragraph (d)(4) of this section, engines must meet the applicable Tier 1 emission standards described in § 89.112.

(2) If you are using the provisions of paragraph (a)(2) of this section, engines must be certified under this part 1039 as follows:

Engines in the following power category . . .	Must meet all standards and requirements that applied in the following model year . . .
(i) 19 ≤ kW < 56	2008
(ii) 56 ≤ kW < 130	2012
(iii) 130 ≤ kW ≤ 560	2011
(iv) kW > 560	2011

(3) In all other cases, engines at or above 37 kW and at or below 560 kW must meet the appropriate Tier 3 standards described in § 89.112. Engines below 37 kW and engines above 560 kW must meet the appropriate Tier 2 standards described in § 89.112.

(f) *Equipment labeling.* You must add a permanent label, written legibly in English, to the engine or another readily visible part of each piece of equipment you produce with exempted engines under this section. This label, which supplements the engine manufacturer's emission control information label, must include at least the following items:

(1) The label heading ''EMISSION CONTROL INFORMATION''.

(2) Your corporate name and trademark.

(3) The calendar year in which the equipment is manufactured.

(4) The name, e-mail address, and phone number of a person to contact for further information.

(5) The following statement:

THIS EQUIPMENT [or identify the type of equipment] HAS AN ENGINE THAT MEETS U.S. EPA EMISSION STANDARDS UNDER 40 CFR 1039.625.

(g) *Notification and reporting.* You must notify us of your intent to use the provisions of this section and send us an annual report to verify that you are not exceeding the allowances, as follows:

(1) Before January 1 of the first year you intend to use the provisions of this section, send the Designated Compliance Officer and the Designated Enforcement Officer a written notice of your intent, including:

(i) Your company's name and address, and your parent company's name and address, if applicable.

(ii) Whom to contact for more information.

(iii) The calendar years in which you expect to use the exemption provisions of this section.

(iv) The name and address of the company that produces the engines you will be using for the equipment exempted under this section.

(v) Your best estimate of the number of units in each power category you will produce under this section and whether you intend to comply under paragraph (b)(1) or (b)(2) of this section.

(vi) The number of units in each power category you have sold in previous calendar years under 40 CFR 89.102(d).

(2) For each year that you use the provisions of this section, send the Designated Compliance Officer and the Designated Enforcement Officer a written report by March 31 of the following year. Include in your report the total number of engines you sold in the preceding year for each power category, based on actual U.S.-directed production information. Also identify the percentages of U.S.-directed production that correspond to the number of units in each power category and the cumulative numbers and percentages of units for all the units you have sold under this section for each power category. You may omit the percentage figures if you include in the report a statement that you will not be using the percent-of-production allowances in paragraph (b)(1) of this section.

(h) *Recordkeeping.* Keep the following records of all equipment with exempted engines you produce under this section for at least five full years after the final year in which allowances are available for each power category:

(1) The model number, serial number, and the date of manufacture for each engine and piece of equipment.

(2) The maximum power of each engine.

(3) The total number or percentage of equipment with exempted engines, as described in paragraph (b) of this section and all documentation supporting your calculation.

(4) The notifications and reports we require under paragraph (g) of this section.

(i) *Enforcement.* Producing more exempted engines or equipment than we allow under this section or installing engines that do not meet the emission standards of paragraph (e) of this section violates the prohibitions in 40 CFR 1068.101(a)(1). You must give us the records we require under this section if we ask for them (*see* 40 CFR 1068.101(a)(2)).

(j) *Provisions for engine manufacturers.* As an engine manufacturer, you may produce exempted engines as needed under this section. You do not have to request this exemption for your engines, but you must have written assurance from equipment manufacturers that they need a certain number of exempted engines under this section. Send us an annual report of the engines you produce under this section, as described in §1039.250(a). For engines produced under the provisions of paragraph (a)(2) of this section, you must certify the engines under this part 1039. For all other exempt engines, the engines must meet the emission standards in paragraph (e) of this section and you must meet all the requirements of 40 CFR 1068.265. If you show under 40 CFR 1068.265(c) that the engines are identical in all material respects to engines that you have previously certified to one or more FELs above the standards specified in paragraph (e) of this section, you must supply sufficient credits for these engines. Calculate these credits under subpart H of this part using the previously certified FELs and the alternate standards. You must meet the labeling requirements in 40 CFR 89.110, but add the following statement instead of the compliance statement in 40 CFR 89.110(b)(10):

THIS ENGINE MEETS U.S. EPA EMISSION STANDARDS UNDER 40 CFR 1039.625. SELLING OR INSTALLING THIS ENGINE FOR ANY PURPOSE OTHER THAN FOR THE EQUIPMENT FLEXIBILITY PROVISIONS OF 40 CFR 1039.625 MAY BE A VIOLATION OF FEDERAL LAW SUBJECT TO CIVIL PENALTY.

(k) *Other exemptions. See* 40 CFR 1068.255 for exemptions based on hardship for equipment manufacturers and secondary engine manufacturers.

(l) [Reserved]

(m) *Additional exemptions for technical or engineering hardship.* You may request additional engine allowances under paragraph (b)(1) of this section for 19–560 kW power categories or, if you are a small equipment manufacturer, under paragraph (b)(2) of this section for engines at or above 19 and below 37 kW. However, you may use these extra allowances only for those equipment models for which you, or an affiliated company, do not also produce the engine. After considering the circumstances, we may permit you to introduce into commerce equipment with such engines that do not comply with Tier 4 emission standards, as follows:

(1) We may approve additional exemptions if extreme and unusual circumstances that are clearly outside your control and that could not have been avoided with reasonable discretion have resulted in technical or engineering problems that prevent you from meeting the requirements of this part. You must show that you exercised prudent planning and have taken all reasonable steps to minimize the scope of your request for additional allowances.

(2) To apply for exemptions under this paragraph (m), send the Designated Compliance Officer and the Designated Enforcement Officer a written request as soon as possible before you are in violation. In your request, include the following information:

(i) Describe your process for designing equipment.

(ii) Describe how you normally work cooperatively or concurrently with your engine supplier to design products.

(iii) Describe the engineering or technical problems causing you to request the exemption and explain why you have not been able to solve them. Describe the extreme and unusual circumstances that led to these problems and explain how they were unavoidable.

(iv) Describe any information or products you received from your engine supplier related to equipment design—such as written specifications, performance data, or prototype engines—and when you received it.

(v) Compare the design processes of the equipment model for which you need additional exemptions and that for other models for which you do not need additional exemptions. Explain the technical differences that justify your request.

(vi) Describe your efforts to find and use other compliant engines, or otherwise explain why none is available.

(vii) Describe the steps you have taken to minimize the scope of your request.

(viii) Include other relevant information. You must give us other relevant information if we ask for it.

(ix) Estimate the increased percent of production you need for each equipment model covered by your request, as described in paragraph (m)(3) of this section. Estimate the increased number of allowances you need for each equipment model covered by your request, as described in paragraph (m)(4) of this section.

(3) We may approve your request to increase the allowances under paragraph (b)(1) of this section, subject to the following limitations:

(i) The additional allowances will not exceed 70 percent for each power category.

(ii) You must use up the allowances under paragraph (b)(1) of this section before using any additional allowance under this paragraph (m).

(iii) Any allowances we approve under this paragraph (m)(3) expire 24 months after the provisions of this section start for a given power category, as described in paragraph (a) of this section. You may use these allowances only for the specific equipment models covered by your request.

(4) We may approve your request to increase the allowances for the 19–56 kW power category under paragraph (b)(2) of this section, subject to the following limitations:

(i) You are eligible for additional allowances under this paragraph (m)(4) only if you are a small equipment manufacturer and you do not use the provisions of paragraph (m)(3) of this section to obtain additional allowances for the 19–56 kW power category.

(ii) You must use up all the available allowances for the 19–56 kW power category under paragraph (b)(2) of this section in a given year before using any additional allowances under this paragraph (m)(4).

(iii) Base your request only on equipment you produce with engines at or above 19 kW and below 37 kW. You may use any additional allowances only for equipment you produce with engines at or above 19 kW and below 37 kW.

(iv) The total allowances under either paragraph (b)(2)(i) or (ii) of this section for the 19–56 kW power category will not exceed 1,100 units.

(v) Any allowances we approve under this paragraph (m)(4) expire 36 months after the provisions of this section start for this power category, as described in paragraph (a) of this section. These additional allowances are not subject to the annual limits specified in paragraph (b)(2) of this section. You may use these allowances only for the specific equipment models covered by your request.

(5) For purposes of this paragraph (m), *small equipment manufacturer* means a small-business equipment manufacturer that had annual U.S.-directed production volume of equipment using nonroad diesel engines between 19 and 56 kW of no more than 3,000 units in 2002 and all earlier calendar years, and has 750 or fewer employees (500 or fewer employees for nonroad equipment manufacturers that produce no construction equipment or industrial trucks). For manufacturers owned by a parent company, the production limit applies to the production of the parent company and all its subsidiaries and the employee limit applies to the total number of employees of the parent company and all its subsidiaries.

[69 FR 39213, June 29, 2004, as amended at 70 FR 40464, July 13, 2005]

§ 1039.626 What special provisions apply to equipment imported under the equipment-manufacturer flexibility program?

This section describes requirements that apply to equipment manufacturers using the provisions of § 1039.625 for equipment produced outside the United States. Note that § 1039.625 limits these provisions to equipment manufacturers that install some engines and have primary responsibility for designing and manufacturing equipment. Companies that import equipment into the United States without meeting these criteria are not eligible for these allowances. Such importers may import equipment with exempted engines only as described in paragraph (b) of this section.

(a) As a foreign equipment manufacturer, you or someone else may import equipment with exempted engines under this section if you comply with the provisions in § 1039.625 and commit to the following:

(1) Give any EPA inspector or auditor complete and immediate access to inspect and audit, as follows:

(i) Inspections and audits may be announced or unannounced.

(ii) Inspections and audits may be by EPA employees or EPA contractors.

(iii) You must provide access to any location where—

(A) Any nonroad engine, equipment, or vehicle is produced or stored.

(B) Documents related to manufacturer operations are kept.

(C) Equipment, engines, or vehicles are tested or stored for testing.

(iv) You must provide any documents requested by an EPA inspector or auditor that are related to matters covered by the inspections or audit.

(v) EPA inspections and audits may include review and copying of any documents related to demonstrating compliance with the exemptions in § 1039.625.

(vi) EPA inspections and audits may include inspection and evaluation of complete or incomplete equipment, engines, or vehicles, and interviewing employees.

(vii) You must make any of your employees available for interview by the EPA inspector or auditor, on request, within a reasonable time period.

(viii) You must provide English language translations of any documents to an EPA inspector or auditor, on request, within 10 working days.

(ix) You must provide English-language interpreters to accompany EPA inspectors and auditors, on request.

(2) Name an agent for service of process located in the District of Columbia. Service on this agent constitutes service on you or any of your officers or

employees for any action by EPA or otherwise by the United States related to the requirements of this part.

(3) The forum for any civil or criminal enforcement action related to the provisions of this section for violations of the Clean Air Act or regulations promulgated thereunder shall be governed by the Clean Air Act.

(4) The substantive and procedural laws of the United States shall apply to any civil or criminal enforcement action against you or any of your officers or employees related to the provisions of this section.

(5) Provide the notification required by § 1039.625(g). Include in the notice of intent in § 1039.625(g)(1) a commitment to comply with the requirements and obligations of § 1039.625 and this section. This commitment must be signed by the owner or president.

(6) You, your agents, officers, and employees must not seek to detain or to impose civil or criminal remedies against EPA inspectors or auditors, whether EPA employees or EPA contractors, for actions performed within the scope of EPA employment related to the provisions of this section.

(7) By submitting notification of your intent to use the provisions of § 1039.625, producing and exporting for resale to the United States nonroad equipment under this section, or taking other actions to comply with the requirements of this part, you, your agents, officers, and employees, without exception, become subject to the full operation of the administrative and judicial enforcement powers and provisions of the United States as described in 28 U.S.C. 1605(a)(2), without limitation based on sovereign immunity, for conduct that violates the requirements applicable to you under this part 1039—including such conduct that violates 18 U.S.C. 1001, 42 U.S.C. 7413(c)(2), or other applicable provisions of the Clean Air Act'with respect to actions instituted against you and your agents, officers, and employees in any court or other tribunal in the United States.

(8) Any report or other document you submit to us must be in the English language, or include a complete translation in English.

(9) You must post a bond to cover any potential enforcement actions under the Clean Air Act before you or anyone else imports your equipment under this section, as follows:

(i) The value of the bond is based on the per-engine bond values shown in Table 1 of this section and on the highest number of engines in each power category you produce in any single calendar year under the provisions of § 1039.625. For example, if you have projected U.S.-directed production volumes of 100 exempt engines in the 19–56 kW power category and 300 exempt engines in the 56–130 kW power category in 2013, the appropriate bond amount is $180,000. If your estimated or actual engine imports increase beyond the level appropriate for your current bond payment, you must post additional bond to reflect the increased sales within 90 days after you change your estimate or determine the actual sales. You may not decrease your bond.

(ii) You may meet the bond requirements of this section with any of the following methods:

(A) Get a bond from a third-party surety that is cited in the U.S. Department of Treasury Circular 570, ''Companies Holding Certificates of Authority as Acceptable Sureties on Federal Bonds and as Acceptable Reinsuring Companies.'' Maintain this bond for five years after the applicable allowance period expires, or five years after you use up all the available allowances under § 1039.625, whichever comes first.

(B) Get the Designated Enforcement Officer to approve a waiver from the bonding requirement, as long as you can show that you have assets of an appropriate liquidity and value readily available in the United States.

(iii) If you forfeit some or all of your bond in an enforcement action, you must post any appropriate bond for continuing importation within 90 days after you forfeit the bond amount.

TABLE 1 OF § 1039.626—PER-ENGINE BOND VALUES

For engines with maximum engine power falling in the following ranges . . .	The per-engine bond value is . . .
kW < 19	$150
19 ≤ kW < 56	300
56 ≤ kW < 130	500
130 ≤ kW < 225	1,000

TABLE 1 OF § 1039.626—PER-ENGINE BOND VALUES—Continued

For engines with maximum engine power falling in the following ranges . . .	The per-engine bond value is . . .
225 ≤ kW < 450	3,000
kW ≥ 450	8,000

(iv) You will forfeit the proceeds of the bond posted under this paragraph (a)(9) if you need to satisfy any United States administrative final order or judicial judgment against you arising from your conduct in violation of this part 1039, including such conduct that violates 18 U.S.C. 1001, 42 U.S.C. 7413(c)(2), or other applicable provisions of the Clean Air Act.

(b) The provisions of this paragraph (b) apply to importers that do not install engines into equipment and do not have primary responsibility for designing and manufacturing equipment. Such importers may import equipment with engines exempted under § 1039.625 only if each engine is exempted under an allowance provided to an equipment manufacturer meeting the requirements of § 1039.625 and this section. You must notify us of your intent to use the provisions of this section and send us an annual report, as follows:

(1) Before January 1 of the first year you intend to use the provisions of this section, send the Designated Compliance Officer and the Designated Enforcement Officer a written notice of your intent, including:

(i) Your company's name and address, and your parent company's name and address, if applicable.

(ii) The name and address of the companies that produce the equipment and engines you will be importing under this section.

(iii) Your best estimate of the number of units in each power category you will import under this section in the upcoming calendar year, broken down by equipment manufacturer and power category.

(iv) The number of units in each power category you have imported in previous calendar years under 40 CFR 89.102(d).

(2) For each year that you use the provisions of this section, send the Designated Compliance Officer and the Designated Enforcement Officer a written report by March 31 of the following year. Include in your report the total number of engines you imported under this section in the preceding calendar year, broken down by engine manufacturer and by equipment manufacturer.

§ 1039.627 What are the incentives for equipment manufacturers to use cleaner engines?

This section allows equipment manufacturers to generate additional allowances under the provisions of § 1039.625 by producing equipment using engines at or above 19 kW certified to specified levels earlier than otherwise required.

(a) For early-compliant engines to generate offsets for use under this section, the following general provisions apply:

(1) The engine manufacturer must comply with the provisions of § 1039.104(a)(1) for the offset-generating engines.

(2) Engines you install in your equipment after December 31 of the years specified in § 1039.104(a)(1) do not generate allowances under this section, even if the engine manufacturer generated offsets for that engine under § 1039.104(a).

(3) Offset-generating engines must be certified to the following standards under this part 1039:

If the engine's maximum power is . . .	And you install . . .	Certified early to the . . .	You may reduce the number of engines in the same power category that are required to meet the . . .	In later model years by . . .
(i) kW ≥ 19	One engine	Emissions standards in § 1039.101.	Standards in Tables 2 through 7 of § 1039.102 or in § 1039.101.	One engine.

If the engine's maximum power is . . .	And you install . . .	Certified early to the . . .	You may reduce the number of engines in the same power category that are required to meet the . . .	In later model years by . . .
(ii) 56 ≤ kW < 130	Two engines	NO_X standards in § 1039.102 (d)(1), and NMHC standard of 0.19 g/kW-hr, a PM standard of 0.02 g/kW-hr, and a CO standard of 5.0 g/kW-hr.	Standards in Tables 2 through 7 of § 1039.102 or in § 1039.101.	One engine.
(iii) 130 ≤ kW < 560	Two engines	NO_X standards in § 1039.102 (d)(2), an NMHC standard of 0.19 g/kW-hr, a PM standard of 0.02 g/kW-hr, and a CO standard of 3.5 g/kW-hr.	Standards in Tables 2 through 7 of § 1039.102 or in § 1039.101.	One engine.

(b) *Using engine offsets.* (1) You may use engine offsets generated under paragraph (a) of this section to generate additional allowances under § 1039.625, as follows:

(i) For each engine offset, you may increase the number of available allowances under § 1039.625(b) for that power category by one engine for the years indicated.

(ii) For engines in 56–560 kW power categories, you may transfer engine offsets across power categories within this power range. Calculate the number of additional allowances by scaling the number of generated engine offsets according to the ratio of engine power for offset and allowance engines. Make this calculation for all your offset engines for which you will transfer offsets under this paragraph (b)(1)(ii), then round the result to determine the total number of available power-weighted allowances. For example, if you generate engine offsets for 75 500-kW engines, you may generate up to 37,500 kW-engines of power-weighted allowances. You may apply this to 375 100-kW engines or any other combination that totals 37,500 kW-engines.

(2) You may decline to use the offsets. If you decline, the engine manufacturer may use the provisions of § 1039.104(a)(1).

(c) *Limitation on offsets for engines above 560 kW.* For engines above 560 kW, you must track how many engines you install in generator sets and how many you install in other applications under the provisions of this section. Offsets from generator-set engines may be used only for generator-set engines. Offsets from engines for other applications may be used only for other applications besides generator sets.

(d) *Reporting.* When you submit your first annual report under § 1039.625(g), include the following additional information related to the engines you use to generate offsets under this section:

(1) The name of each engine family involved.

(2) The number of engines from each power category.

(3) The maximum engine power of each engine.

(4) For engines above 560 kW, whether you use engines certified to the standards for generator-set engines.

(e) *In-use fuel.* If the engine manufacturer certifies using ultra low-sulfur diesel fuel, you must take steps to ensure that the in-use engines in the family will use diesel fuel with a sulfur concentration no greater than 15 ppm. For example, selling equipment only into applications where the operator commits to a central-fueling facility with ultra low-sulfur diesel fuel throughout its lifetime would meet this requirement.

§ 1039.630 What are the economic hardship provisions for equipment manufacturers?

If you qualify for the economic hardship provisions specified in 40 CFR 1068.255, we may approve your hardship application subject to the following additional conditions:

(a) You must show that you have used up the allowances to produce equipment with exempted engines under § 1039.625.

(b) You may produce equipment under this section for up to 12 months total (or 24 months total for small-volume manufacturers).

§ 1039.635 What are the hardship provisions for engine manufacturers?

If you qualify for the hardship provisions specified in 40 CFR 1068.245, we may approve a period of delayed compliance for up to one model year total (or two model years total for small-volume manufacturers). If you qualify for the hardship provisions specified in 40 CFR 1068.250 for small-volume manufacturers, we may approve a period of delayed compliance for up to two model years total.

§ 1039.640 What special provisions apply to branded engines?

The following provisions apply if you identify the name and trademark of another company instead of your own on your emission control information label, as provided by § 1039.135(c)(2):

(a) You must have a contractual agreement with the other company that obligates that company to take the following steps:

(1) Meet the emission warranty requirements that apply under § 1039.120. This may involve a separate agreement involving reimbursement of warranty-related expenses.

(2) Report all warranty-related information to the certificate holder.

(b) In your application for certification, identify the company whose trademark you will use and describe the arrangements you have made to meet your requirements under this section.

(c) You remain responsible for meeting all the requirements of this chapter, including warranty and defect-reporting provisions.

§ 1039.645 What special provisions apply to engines used for transportation refrigeration units?

Manufacturers may choose to use the provisions of this section for engines used in transportation refrigeration units (TRUs). The operating restrictions and characteristics in paragraph (f) of this section define engines that are not used in TRUs. All provisions of this part apply for TRU engines, except as specified in this section.

(a) You may certify engines under this section with the following special provisions:

(1) The engines are not subject to the transient emission standards of subpart B of this part.

(2) The steady-state emission standards in subpart B of this part apply for emissions measured over the steady-state test cycle described in paragraph (b) of this section instead of the otherwise applicable duty cycle described in § 1039.505.

(b) Measure steady-state emissions using the procedures specified in § 1039.505, except for the duty cycles, as follows:

(1) The following duty cycle applies for discrete-mode testing:

TABLE 1 OF § 1039.645—DISCRETE-MODE CYCLE FOR TRU ENGINES

Mode number	Engine speed [1]	Observed torque [2]	Weighting factors
1	Maximum test speed	75	0.25
2	Maximum test speed	50	0.25
3	Intermediate test speed	75	0.25
4	Intermediate test speed	50	0.25

[1] Speed terms are defined in 40 CFR part 1065.
[2] The percent torque is relative to the maximum torque at the given engine speed.

(2) The following duty cycle applies for ramped-modal testing:

TABLE 2 OF § 1039.645—RAMPED-MODAL CYCLE FOR TRU ENGINES

RMC mode	Time in mode (seconds)	Engine speed [1]	Torque (percent) [2,3]
1a Steady-state	290	Intermediate Speed	75.
1b Transition	20	Intermediate Speed	Linear Transition.
2a Steady-state	280	Intermediate Speed	50.
2b Transition	20	Linear Transition	Linear Transition.
3a Steady-state	280	Maximum Test Speed	75.
3b Transition	20	Maximum Test Speed	Linear Transition.
4 Steady-state	290	Maximum Test Speed	50

[1] Speed terms are defined in 40 CFR part 1065.
[2] The percent torque is relative to the maximum torque at the commanded engine speed.
[3] Advance from one mode to the next within a 20-second transition phase. During the transition phase, command a linear progression from the torque setting of the current mode to the torque setting of the next mode, and simultaneously command a similar linear progression for engine speed if there is a change in speed setting.

(c) Engines certified under this section must be certified in a separate engine family that contains only TRU engines.

(d) You must do the following for each engine certified under this section:

(1) State on the emission control information label: ''THIS ENGINE IS CERTIFIED TO OPERATE ONLY IN TRANSPORTATION REFRIGERATION UNITS. INSTALLING OR USING THIS ENGINE IN ANY OTHER APPLICATION MAY BE A VIOLATION OF FEDERAL LAW SUBJECT TO CIVIL PENALTY.''.

(2) State in the emission-related installation instructions all steps necessary to ensure that the engine will operate only in the modes covered by the test cycle described in this section.

(3) Keep records to document the destinations and quantities of engines produced under this section.

(e) All engines certified under this section must comply with NTE standards, as described in § 1039.101 or § 1039.102 for the applicable model year, except that the NTE standards are not limited with respect to operating speeds and loads. In your application for certification, certify that all the engines in the engine family comply with the not-to-exceed emission standards for all normal operation and use. The deficiency provisions of § 1039.104(d) do not apply to these engines. This paragraph (e) applies whether or not the engine would otherwise be subject to NTE standards.

(f) An engine is not considered to be used in a TRU if any of the following is true:

(1) The engine is installed in any equipment other than refrigeration units for railcars, truck trailers, or other freight vehicles.

(2) The engine operates in any mode not covered by the test cycle described in this section, except as follows:

(i) The engine may operate briefly at idle. Note, however, that TRU engines must meet NTE emission standards under any type of operation, including idle, as described in paragraph (e) of this section.

(ii) The engine may have a minimal amount of transitional operation between two allowable modes. As an example, a thirty-second transition period would clearly not be considered minimal.

(iii) The engine as installed may experience up to a 2-percent decrease in load at a given setpoint over any 10-minute period, and up to a 15-percent decrease in load at a given setpoint over any 60-minute period.

(3) The engine is sold in a configuration that allows the engine to operate in any mode not covered by the test cycle described in this section. For example, this section does not apply to an engine sold without a governor limiting operation only to those modes covered by the test cycle described in this section.

(4) The engine is subject to Tier 3 or earlier standards, or phase-out Tier 4 standards.

§ 1039.650 [Reserved]

§ 1039.655 What special provisions apply to engines sold in Guam, American Samoa, or the Commonwealth of the Northern Mariana Islands?

(a) The prohibitions in § 1068.101(a)(1) do not apply to an engine if the following conditions are met:

(1) The engine is intended for use and will be used in Guam, American Samoa, or the Commonwealth of the Northern Mariana Islands.

(2) The engine meets the latest applicable emission standards in 40 CFR 89.112.

(3) You meet all the requirements of 40 CFR 1068.265.

(b) If you introduce an engine into commerce in the United States under this section, you must meet the labeling requirements in 40 CFR 89.110, but add the following statement instead of the compliance statement in 40 CFR 89.110(b)(10):

THIS ENGINE DOES NOT COMPLY WITH U.S. EPA TIER 4 EMISSION REQUIREMENTS. IMPORTING THIS ENGINE INTO THE UNITED STATES OR ANY TERRITORY OF THE UNITED STATES EXCEPT GUAM, AMERICAN SAMOA, OR THE COMMONWEALTH OF THE NORTHERN MARIANA ISLANDS MAY BE A VIOLATION OF FEDERAL LAW SUBJECT TO CIVIL PENALTY.

(c) Introducing into commerce an engine exempted under this section in any state or territory of the United States other than Guam, American Samoa, or the Commonwealth of the Northern Mariana Islands, throughout its lifetime, violates the prohibitions in 40 CFR 1068.101(a)(1), unless it is exempt under a different provision.

[69 FR 39213, June 29, 2004, as amended at 70 FR 40464, July 13, 2005]

§ 1039.660 What special provisions apply to Independent Commercial Importers?

Under § 1039.801, certain engines are considered to be new engines when they are imported into the United States, even if they have previously been used outside the country. Independent Commercial Importers may use the provisions of 40 CFR part 89, subpart G, and 40 CFR 89.906(b) to receive a certificate of conformity for engines meeting all the requirements of this part 1039.

Subpart H—Averaging, Banking, and Trading for Certification

§ 1039.701 General provisions.

(a) You may average, bank, and trade (ABT) emission credits for purposes of certification as described in this subpart to show compliance with the standards of this part. Participation in this program is voluntary.

(b) Section 1039.740 restricts the use of emission credits to certain averaging sets.

(c) The definitions of Subpart I of this part apply to this subpart. The following definitions also apply:

(1) *Actual emission credits* means emission credits you have generated that we have verified by reviewing your final report.

(2) *Averaging set* means a set of engines in which emission credits may be exchanged only with other engines in the same averaging set.

(3) *Broker* means any entity that facilitates a trade of emission credits between a buyer and seller.

(4) *Buyer* means the entity that receives emission credits as a result of a trade.

(5) *Reserved emission credits* means emission credits you have generated that we have not yet verified by reviewing your final report.

(6) *Seller* means the entity that provides emission credits during a trade.

(7) *Standard* means the emission standard that applies under subpart B of this part for engines not participating in the ABT program of this subpart.

(8) *Trade* means to exchange emission credits, either as a buyer or seller.

(d) You may not use emission credits generated under this subpart to offset any emissions that exceed an FEL or standard. This applies for all testing, including certification testing, in-use testing, selective enforcement audits, and other production-line testing. However, if emissions from an engine exceed an FEL or standard (for example, during a selective enforcement audit), you may use emission credits to recertify the engine family with a higher

FEL that applies only to future production.

(e) Engine families that use emission credits for one or more pollutants may not generate positive emission credits for another pollutant.

(f) Emission credits may be used in the model year they are generated or in future model years. Emission credits may not be used for past model years.

(g) You may increase or decrease an FEL during the model year by amending your application for certification under §1039.225. The new FEL may apply only to engines you have not already introduced into commerce. Each engine's emission control information label must include the applicable FELs.

§1039.705 How do I generate and calculate emission credits?

The provisions of this section apply separately for calculating emission credits for NO_X, NO_X+NMHC, or PM.

(a) Calculate positive emission credits for an engine family that has an FEL below the otherwise applicable standard. Calculate negative emission credits for an engine family that has an FEL above the otherwise applicable standard.

(b) For each participating engine family, calculate positive or negative emission credits relative to the otherwise applicable emission standard. Round calculated emission credits to the nearest kilogram (kg), using consistent units throughout the following equation:

$$\text{Emission credits (kg)} = (\text{Std} - \text{FEL}) \times (\text{Volume}) \times (\text{AvgPR}) \times (\text{UL}) \times (10^{-3})$$

Where:

Std = the emission standard, in grams per kilowatt-hour, that applies under subpart B of this part for engines not participating in the ABT program of this subpart (the ''otherwise applicable standard'').

FEL = the family emission limit for the engine family, in grams per kilowatt-hour.

Volume = the number of engines eligible to participate in the averaging, banking, and trading program within the given engine family during the model year, as described in paragraph (c) of this section.

AvgPR = the average maximum engine power of all the engine configurations within an engine family, calculated on a sales-weighted basis, in kilowatts.

UL = the useful life for the given engine family, in hours.

(c) In your application for certification, base your showing of compliance on projected production volumes for engines whose point of first retail sale is in the United States. As described in §1039.730, compliance with the requirements of this subpart is determined at the end of the model year based on actual production volumes for engines whose point of first retail sale is in the United States. Do not include any of the following engines to calculate emission credits:

(1) Engines exempted under subpart G of this part or under 40 CFR part 1068.

(2) Exported engines.

(3) Engines not subject to the requirements of this part, such as those excluded under §1039.5.

(4) Engines in families that include only stationary engines, except for engines in families certified to standards that are identical to standards applicable under this part 1039 to nonroad engines of the same type for the same model year.

(5) Any other engines, where we indicate elsewhere in this part 1039 that they are not to be included in the calculations of this subpart.

[69 FR 39213, June 29, 2004, as amended at 71 FR 39185, July 11, 2006]

§1039.710 How do I average emission credits?

(a) Averaging is the exchange of emission credits among your engine families. You may average emission credits only within the same averaging set.

(b) You may certify one or more engine families to an FEL above the applicable standard, subject to the FEL caps and other provisions in subpart B of this part, if you show in your application for certification that your projected balance of all emission-credit transactions in that model year is greater than or equal to zero.

(c) If you certify an engine family to an FEL that exceeds the otherwise applicable standard, you must obtain enough emission credits to offset the engine family's deficit by the due date for the final report required in §1039.730. The emission credits used to

address the deficit may come from your other engine families that generate emission credits in the same model year, from emission credits you have banked, or from emission credits you obtain through trading.

§ 1039.715 How do I bank emission credits?

(a) Banking is the retention of emission credits by the manufacturer generating the emission credits for use in averaging or trading in future model years. You may use banked emission credits only within the averaging set in which they were generated.

(b) In your application for certification, designate any emission credits you intend to bank. These emission credits will be considered reserved credits. During the model year and before the due date for the final report, you may redesignate these emission credits for averaging or trading.

(c) You may use banked emission credits from the previous model year for averaging or trading before we verify them, but we may revoke these emission credits if we are unable to verify them after reviewing your reports or auditing your records.

(d) Reserved credits become actual emission credits only when we verify them in reviewing your final report.

§ 1039.720 How do I trade emission credits?

(a) Trading is the exchange of emission credits between manufacturers. You may use traded emission credits for averaging, banking, or further trading transactions. Traded emission credits may be used only within the averaging set in which they were generated.

(b) You may trade actual emission credits as described in this subpart. You may also trade reserved emission credits, but we may revoke these emission credits based on our review of your records or reports or those of the company with which you traded emission credits.

(c) If a negative emission credit balance results from a transaction, both the buyer and seller are liable, except in cases we deem to involve fraud. See § 1039.255(e) for cases involving fraud. We may void the certificates of all engine families participating in a trade that results in a manufacturer having a negative balance of emission credits. See § 1039.745.

§ 1039.725 What must I include in my application for certification?

(a) You must declare in your application for certification your intent to use the provisions of this subpart for each engine family that will be certified using the ABT program. You must also declare the FELs you select for the engine family for each pollutant for which you are using the ABT program. Your FELs must comply with the specifications of subpart B of this part, including the FEL caps. FELs must be expressed to the same number of decimal places as the applicable standards.

(b) Include the following in your application for certification:

(1) A statement that, to the best of your belief, you will not have a negative balance of emission credits for any averaging set when all emission credits are calculated at the end of the year.

(2) Detailed calculations of projected emission credits (positive or negative) based on projected production volumes. If your engine family will generate positive emission credits, state specifically where the emission credits will be applied (for example, to which engine family they will be applied in averaging, whether they will be traded, or whether they will be reserved for banking). If you have projected negative emission credits for an engine family, state the source of positive emission credits to offset the negative emission credits. Describe whether the emission credits are actual or reserved and whether they will come from averaging, banking, trading, or a combination of these. Identify from which of your engine families or from which manufacturer the emission credits will come.

§ 1039.730 What ABT reports must I send to EPA?

(a) If any of your engine families are certified using the ABT provisions of this subpart, you must send an end-of-year report within 90 days after the end of the model year and a final report within 270 days after the end of the

model year. We may waive the requirement to send the end-of year report, as long as you send the final report on time.

(b) Your end-of-year and final reports must include the following information for each engine family participating in the ABT program:

(1) Engine-family designation.

(2) The emission standards that would otherwise apply to the engine family.

(3) The FEL for each pollutant. If you changed an FEL during the model year, identify each FEL you used and calculate the positive or negative emission credits under each FEL. Also, describe how the applicable FEL can be identified for each engine you produced. For example, you might keep a list of engine identification numbers that correspond with certain FEL values.

(4) The projected and actual production volumes for the model year with a point of retail sale in the United States. If you changed an FEL during the model year, identify the actual production volume associated with each FEL.

(5) Maximum engine power for each engine configuration, and the sales-weighted average engine power for the engine family.

(6) Useful life.

(7) Calculated positive or negative emission credits for the whole engine family. Identify any emission credits that you traded, as described in paragraph (d)(1) of this section.

(c) Your end-of-year and final reports must include the following additional information:

(1) Show that your net balance of emission credits from all your engine families in each averaging set in the applicable model year is not negative.

(2) State whether you will reserve any emission credits for banking.

(3) State that the report's contents are accurate.

(d) If you trade emission credits, you must send us a report within 90 days after the transaction, as follows:

(1) As the seller, you must include the following information in your report:

(i) The corporate names of the buyer and any brokers.

(ii) A copy of any contracts related to the trade.

(iii) The engine families that generated emission credits for the trade, including the number of emission credits from each family.

(2) As the buyer, you must include the following information in your report:

(i) The corporate names of the seller and any brokers.

(ii) A copy of any contracts related to the trade.

(iii) How you intend to use the emission credits, including the number of emission credits you intend to apply to each engine family (if known).

(e) Send your reports electronically to the Designated Compliance Officer using an approved information format. If you want to use a different format, send us a written request with justification for a waiver.

(f) Correct errors in your end-of-year report or final report as follows:

(1) You may correct any errors in your end-of-year report when you prepare the final report, as long as you send us the final report by the time it is due.

(2) If you or we determine within 270 days after the end of the model year that errors mistakenly decrease your balance of emission credits, you may correct the errors and recalculate the balance of emission credits. You may not make these corrections for errors that are determined more than 270 days after the end of the model year. If you report a negative balance of emission credits, we may disallow corrections under this paragraph (f)(2).

(3) If you or we determine anytime that errors mistakenly increase your balance of emission credits, you must correct the errors and recalculate the balance of emission credits.

§ 1039.735 What records must I keep?

(a) You must organize and maintain your records as described in this section. We may review your records at any time.

(b) Keep the records required by this section for eight years after the due date for the end-of-year report. You may use any appropriate storage formats or media, including paper, microfilm, or computer diskettes.

(c) Keep a copy of the reports we require in § 1039.725 and § 1039.730.

(d) Keep the following additional records for each engine you produce that generates or uses emission credits under the ABT program:

(1) Engine family designation.

(2) Engine identification number.

(3) FEL and useful life.

(4) Maximum engine power.

(5) Build date and assembly plant.

(6) Purchaser and destination.

(e) We may require you to keep additional records or to send us relevant information not required by this section.

§ 1039.740 What restrictions apply for using emission credits?

The following restrictions apply for using emission credits:

(a) *Averaging sets.* Emission credits may be exchanged only within an averaging set. For Tier 4 engines, there are two averaging sets—one for engines at or below 560 kW and another for engines above 560 kW.

(b) *Emission credits from earlier tiers of standards.* (1) For purposes of ABT under this subpart, you may not use emission credits generated from engines subject to emission standards under 40 CFR part 89, except as specified in § 1039.102(d)(1) or the following table:

If the maximum power of the credit-generating engine is . . .	And it was certified to the following standards under 40 CFR part 89 . . .	Then you may use those banked credits for the following Tier 4 engines . . .
(i) kW < 19	Tier 2	kW < 19
(ii) 19 ≤ kW < 37	Tier 2	kW ≥ 19
(iii) 37 ≤ kW ≤ 560	Tier 3	kW ≥ 19
(iv) kW > 560	Tier 2	kW ≥ 19

(2) Emission credits generated from marine engines certified under the provisions of 40 CFR part 89 may not be used under this part.

(3) See 40 CFR part 89 for other restrictions that may apply for using emission credits generated under that part.

(4) If the maximum power of an engine generating credits under the Tier 2 standards in 40 CFR part 89 is at or above 37 kW and below 75 kW, you may use those credits for certifying engines under the Option #1 standards in § 1039.102.

(c) *NO_X and NO_X+NMHC emission credits.* You may use NO_X emission credits without adjustment to show compliance with NO_X+NMHC standards. You may use NO_X+NMHC emission credits to show compliance with NO_X standards, but you must adjust the NO_X+NMHC emission credits downward by twenty percent when you use them, as shown in the following equation:

$$NO_X \text{ emission credits} = (0.8) \times (NO_X\text{+NMHC emission credits}).$$

(d) *Other restrictions.* Other sections of this part specify additional restrictions for using emission credits under certain special provisions.

[69 FR 39213, June 29, 2004, as amended at 70 FR 40464, July 13, 2005]

§ 1039.745 What can happen if I do not comply with the provisions of this subpart?

(a) For each engine family participating in the ABT program, the certificate of conformity is conditional upon full compliance with the provisions of this subpart during and after the model year. You are responsible to establish to our satisfaction that you fully comply with applicable requirements. We may void the certificate of conformity for an engine family if you fail to comply with any provisions of this subpart.

(b) You may certify your engine family to an FEL above an applicable standard based on a projection that you will have enough emission credits to offset the deficit for the engine family. However, we may void the certificate of conformity if you cannot show in your final report that you have enough actual emission credits to offset a deficit for any pollutant in an engine family.

(c) We may void the certificate of conformity for an engine family if you fail to keep records, send reports, or give us information we request.

(d) You may ask for a hearing if we void your certificate under this section (see § 1039.820).

Subpart I—Definitions and Other Reference Information

§ 1039.801 What definitions apply to this part?

The following definitions apply to this part. The definitions apply to all subparts unless we note otherwise. All undefined terms have the meaning the Act gives to them. The definitions follow:

Act means the Clean Air Act, as amended, 42 U.S.C. 7401–7671q.

Adjustable parameter means any device, system, or element of design that someone can adjust (including those which are difficult to access) and that, if adjusted, may affect emissions or engine performance during emission testing or normal in-use operation. This includes, but is not limited to, parameters related to injection timing and fueling rate. You may ask us to exclude a parameter that is difficult to access if it cannot be adjusted to affect emissions without significantly degrading engine performance, or if you otherwise show us that it will not be adjusted in a way that affects emissions during in-use operation.

Aftertreatment means relating to a catalytic converter, particulate filter, or any other system, component, or technology mounted downstream of the exhaust valve (or exhaust port) whose design function is to decrease emissions in the engine exhaust before it is exhausted to the environment. Exhaust-gas recirculation (EGR) and turbochargers are not aftertreatment.

Aircraft means any vehicle capable of sustained air travel above treetop heights.

Amphibious vehicle means a vehicle with wheels or tracks that is designed primarily for operation on land and secondarily for operation in water.

Auxiliary emission-control device means any element of design that senses temperature, motive speed, engine RPM, transmission gear, or any other parameter for the purpose of activating, modulating, delaying, or deactivating the operation of any part of the emission-control system.

Brake power means the usable power output of the engine, not including power required to fuel, lubricate, or heat the engine, circulate coolant to the engine, or to operate aftertreatment devices.

Calibration means the set of specifications and tolerances specific to a particular design, version, or application of a component or assembly capable of functionally describing its operation over its working range.

Certification means obtaining a certificate of conformity for an engine family that complies with the emission standards and requirements in this part.

Certified emission level means the highest deteriorated emission level in an engine family for a given pollutant from either transient or steady-state testing.

Compression-ignition means relating to a type of reciprocating, internal-combustion engine that is not a spark-ignition engine.

Constant-speed engine means an engine whose certification is limited to constant-speed operation. Engines whose constant-speed governor function is removed or disabled are no longer constant-speed engines.

Constant-speed operation means engine operation with a governor that controls the operator input to maintain an engine at a reference speed, even under changing load. For example, an isochronous governor changes reference speed temporarily during a load change, then returns the engine to its original reference speed after the engine stabilizes. Isochronous governors typically allow speed changes up to 1.0%. Another example is a speed-droop governor, which has a fixed reference speed at zero load and allows the reference speed to decrease as load increases. With speed-droop governors, speed typically decreases (3 to 10)% below the reference speed at zero load, such that the minimum reference speed occurs near the engine's point of maximum power.

Crankcase emissions means airborne substances emitted to the atmosphere from any part of the engine crankcase's ventilation or lubrication systems. The crankcase is the housing for the crankshaft and other related internal parts.

Critical emission-related component means any of the following components:

(1) Electronic control units, aftertreatment devices, fuel-metering components, EGR-system components, crankcase-ventilation valves, all components related to charge-air compression and cooling, and all sensors and actuators associated with any of these components.

(2) Any other component whose primary purpose is to reduce emissions.

Designated Compliance Officer means the Manager, Engine Programs Group (6405–J), U.S. Environmental Protection Agency, 1200 Pennsylvania Ave., NW., Washington, DC 20460.

Designated Enforcement Officer means the Director, Air Enforcement Division (2242A), U.S. Environmental Protection Agency, 1200 Pennsylvania Ave., NW.,Washington, DC 20460.

Deteriorated emission level means the emission level that results from applying the appropriate deterioration factor to the official emission result of the emission-data engine.

Deterioration factor means the relationship between emissions at the end of useful life and emissions at the low-hour test point, expressed in one of the following ways:

(1) For multiplicative deterioration factors, the ratio of emissions at the end of useful life to emissions at the low-hour test point.

(2) For additive deterioration factors, the difference between emissions at the end of useful life and emissions at the low-hour test point.

Discrete-mode means relating to the discrete-mode type of steady-state test described in § 1039.505.

Emission-control system means any device, system, or element of design that controls or reduces the regulated emissions from an engine.

Emission-data engine means an engine that is tested for certification. This includes engines tested to establish deterioration factors.

Emission-related maintenance means maintenance that substantially affects emissions or is likely to substantially affect emission deterioration.

Engine configuration means a unique combination of engine hardware and calibration within an engine family. Engines within a single engine configuration differ only with respect to normal production variability.

Engine family has the meaning given in § 1039.230.

Engine manufacturer means the manufacturer of the engine. See the definition of ''manufacturer'' in this section.

Engine used in a locomotive means either an engine placed in the locomotive to move other equipment, freight, or passenger traffic; or an engine mounted on the locomotive to provide auxiliary power.

Equipment manufacturer means a manufacturer of nonroad equipment. All nonroad equipment manufacturing entities under the control of the same person are considered to be a single nonroad equipment manufacturer. (Note: In § 1039.626, the term ''equipment manufacturer'' has a narrower meaning, which applies only to that section.)

Excluded means relating to an engine that either:

(1) Has been determined not to be a nonroad engine, as specified in 40 CFR 1068.30; or

(2) Is a nonroad engine that, according to § 1039.5, is not subject to this part 1039.

Exempted has the meaning we give in 40 CFR 1068.30.

Exhaust-gas recirculation means a technology that reduces emissions by routing exhaust gases that had been exhausted from the combustion chamber(s) back into the engine to be mixed with incoming air before or during combustion. The use of valve timing to increase the amount of residual exhaust gas in the combustion chamber(s) that is mixed with incoming air before or during combustion is not considered exhaust-gas recirculation for the purposes of this part.

Family emission limit (FEL) means an emission level declared by the manufacturer to serve in place of an otherwise applicable emission standard under the ABT program in subpart H of this part. The family emission limit must be expressed to the same number of decimal places as the emission standard it replaces. The family emission limit serves as the emission standard for the engine family with respect to all required testing.

Fuel system means all components involved in transporting, metering, and mixing the fuel from the fuel tank to

the combustion chamber(s), including the fuel tank, fuel tank cap, fuel pump, fuel filters, fuel lines, carburetor or fuel-injection components, and all fuel-system vents.

Fuel type means a general category of fuels such as diesel fuel or natural gas. There can be multiple grades within a single fuel type, such as high-sulfur or low-sulfur diesel fuel.

Generator-set engine means an engine used primarily to operate an electrical generator or alternator to produce electric power for other applications.

Good engineering judgment has the meaning we give in 40 CFR 1068.30. See 40 CFR 1068.5 for the administrative process we use to evaluate good engineering judgment.

High-sulfur diesel fuel means one of the following:

(1) For in-use fuels, *high-sulfur diesel fuel* means a diesel fuel with a maximum sulfur concentration greater than 500 parts per million.

(2) For testing, *high-sulfur diesel fuel* has the meaning we give in 40 CFR part 1065.

Hydrocarbon (HC) means the hydrocarbon group on which the emission standards are based for each fuel type. For alcohol-fueled engines, HC means total hydrocarbon equivalent (THCE). For all other engines, HC means nonmethane hydrocarbon (NMHC).

Identification number means a unique specification (for example, a model number/serial number combination) that allows someone to distinguish a particular engine from other similar engines.

Intermediate test speed has the meaning we give in 40 CFR 1065.515.

Low-hour means relating to an engine with stabilized emissions and represents the undeteriorated emission level. This would generally involve less than 300 hours of operation.

Low-sulfur diesel fuel means one of the following:

(1) For in-use fuels, *low-sulfur diesel* fuel means a diesel fuel with a maximum sulfur concentration of 500 parts per million.

(2) For testing, *low-sulfur diesel fuel* has the meaning we give in 40 CFR part 1065.

Manufacture means the physical and engineering process of designing, constructing, and assembling a nonroad engine or a piece of nonroad equipment.

Manufacturer has the meaning given in section 216(1) of the Act. In general, this term includes any person who manufactures an engine, vehicle, or piece of equipment for sale in the United States or otherwise introduces a new nonroad engine into commerce in the United States. This includes importers who import engines, equipment, or vehicles for resale. (Note: In § 1039.626, the term ''equipment manufacturer'' has a narrower meaning, which applies only to that section.)

Marine engine means a nonroad engine that is installed or intended to be installed on a marine vessel. This includes a portable auxiliary marine engine only if its fueling, cooling, or exhaust system is an integral part of the vessel. There are two kinds of marine engines:

(1) Propulsion marine engine means a marine engine that moves a vessel through the water or directs the vessel's movement.

(2) Auxiliary marine engine means a marine engine not used for propulsion.

Marine vessel has the meaning given in 1 U.S.C. 3, except that it does not include amphibious vehicles. The definition in 1 U.S.C. 3 very broadly includes every craft capable of being used as a means of transportation on water.

Maximum engine power has the meaning given in § 1039.140. Note that § 1039.230 generally disallows grouping engines from different power categories in the same engine family.

Maximum test speed has the meaning we give in 40 CFR 1065.1001.

Maximum test torque has the meaning we give in 40 CFR 1065.1001.

Model year means one of the following things:

(1) For freshly manufactured equipment and engines (see definition of ''new nonroad engine,'' paragraph (1)), model year means one of the following:

(i) Calendar year.

(ii) Your annual new model production period if it is different than the calendar year. This must include January 1 of the calendar year for which the model year is named. It may not begin

before January 2 of the previous calendar year and it must end by December 31 of the named calendar year.

(2) For an engine that is converted to a nonroad engine after being placed into service as a motor-vehicle engine or a stationary engine, model year means the calendar year in which the engine was originally produced (see definition of ''new nonroad engine,'' paragraph (2)).

(3) For a nonroad engine excluded under § 1039.5 that is later converted to operate in an application that is not excluded, model year means the calendar year in which the engine was originally produced (see definition of ''new nonroad engine,'' paragraph (3)).

(4) For engines that are not freshly manufactured but are installed in new nonroad equipment, model year means the calendar year in which the engine is installed in the new nonroad equipment (see definition of ''new nonroad engine,'' paragraph (4)).

(5) For imported engines:

(i) For imported engines described in paragraph (5)(i) of the definition of ''new nonroad engine,'' *model year* has the meaning given in paragraphs (1) through (4) of this definition.

(ii) For imported engines described in paragraph (5)(ii) of the definition of ''new nonroad engine,'' *model year* has the meaning given in 40 CFR 89.602 for independent commercial importers.

Motor vehicle has the meaning we give in 40 CFR 85.1703(a).

New nonroad engine means any of the following things:

(1) A freshly manufactured nonroad engine for which the ultimate purchaser has never received the equitable or legal title. This kind of engine might commonly be thought of as ''brand new.'' In the case of this paragraph (1), the engine becomes new when it is fully assembled for the first time. The engine is no longer new when the ultimate purchaser receives the title or the product is placed into service, whichever comes first.

(2) An engine originally manufactured as a motor-vehicle engine or a stationary engine that is later intended to be used in a piece of nonroad equipment. In this case, the engine is no longer a motor-vehicle or stationary engine and becomes a ''new nonroad engine''. The engine is no longer new when it is placed into nonroad service.

(3) A nonroad engine that has been previously placed into service in an application we exclude under § 1039.5, where that engine is installed in a piece of equipment that is covered by this part 1039. The engine is no longer new when it is placed into nonroad service covered by this part 1039. For example, this would apply to a marine diesel engine that is no longer used in a marine vessel.

(4) An engine not covered by paragraphs (1) through (3) of this definition that is intended to be installed in new nonroad equipment. The engine is no longer new when the ultimate purchaser receives a title for the equipment or the product is placed into service, whichever comes first. This generally includes installation of used engines in new equipment.

(5) An imported nonroad engine, subject to the following provisions:

(i) An imported nonroad engine covered by a certificate of conformity issued under this part that meets the criteria of one or more of paragraphs (1) through (4) of this definition, where the original engine manufacturer holds the certificate, is new as defined by those applicable paragraphs.

(ii) An imported nonroad engine covered by a certificate of conformity issued under this part, where someone other than the original engine manufacturer holds the certificate (such as when the engine is modified after its initial assembly), becomes new when it is imported. It is no longer new when the ultimate purchaser receives a title for the engine or it is placed into service, whichever comes first.

(iii) An imported nonroad engine that is not covered by a certificate of conformity issued under this part at the time of importation is new, but only if it was produced on or after the dates shown in the following table. This addresses uncertified engines and equipment initially placed into service that someone seeks to import into the United States. Importation of this kind of new nonroad engine (or equipment containing such an engine) is generally prohibited by 40 CFR part 1068.

APPLICABILITY OF EMISSION STANDARDS FOR NONROAD DIESEL ENGINES

Maximum engine power	Initial date of emission standards
kW < 19	January 1, 2000.
19 ≤ kW < 37	January 1, 1999.
37 ≤ kW < 75	January 1, 1998.
75 ≤ kW < 130	January 1, 1997.
130 ≤ kW ≤ 560	January 1, 1996.
kW > 560	January 1, 2000.

New nonroad equipment means either of the following things:

(1) A nonroad piece of equipment for which the ultimate purchaser has never received the equitable or legal title. The product is no longer new when the ultimate purchaser receives this title or the product is placed into service, whichever comes first.

(2) An imported nonroad piece of equipment with an engine not covered by a certificate of conformity issued under this part at the time of importation and manufactured after the requirements of this part start to apply (see § 1039.1).

Noncommercial fuel means a combustible product that is not marketed as a commercial fuel, but is used as a fuel for nonroad engines. For example, this includes methane that is produced and released from landfills or oil wells, or similar unprocessed fuels that are not intended to meet any otherwise applicable fuel specifications. See § 1039.615 for provisions related to engines designed to burn noncommercial fuels.

Noncompliant engine means an engine that was originally covered by a certificate of conformity, but is not in the certified configuration or otherwise does not comply with the conditions of the certificate.

Nonconforming engine means an engine not covered by a certificate of conformity that would otherwise be subject to emission standards.

Nonmethane hydrocarbon means the difference between the emitted mass of total hydrocarbons and the emitted mass of methane.

Nonroad means relating to nonroad engines or equipment that includes nonroad engines.

Nonroad engine has the meaning we give in 40 CFR 1068.30. In general this means all internal-combustion engines except motor vehicle engines, stationary engines, engines used solely for competition, or engines used in aircraft. This part does not apply to all nonroad engines (see § 1039.5).

Nonroad equipment means a piece of equipment that is powered by one or more nonroad engines.

Official emission result means the measured emission rate for an emission-data engine on a given duty cycle before the application of any deterioration factor, but after the applicability of regeneration adjustment factors.

Opacity means the fraction of a beam of light, expressed in percent, which fails to penetrate a plume of smoke, as measured by the procedure specified in § 1039.501.

Oxides of nitrogen has the meaning we give in 40 CFR part 1065.

Particulate trap means a filtering device that is designed to physically trap all particulate matter above a certain size.

Piece of equipment means any vehicle, vessel, or other type of equipment using engines to which this part applies.

Placed into service means put into initial use for its intended purpose.

Point of first retail sale means the location at which the initial retail sale occurs. This generally means an equipment dealership, but may also include an engine seller or distributor in cases where loose engines are sold to the general public for uses such as replacement engines.

Power category means a specific range of maximum engine power that defines the applicability of standards. For example, references to the 56–130 kW power category and 56 ≤ kW < 130 include all engines with maximum engine power at or above 56 kW but below 130 kW. Also references to 56–560 kW power categories or 56 ≤ kW ≤ 560 include all engines with maximum engine power at or above 56 kW but at or below 560 kW, even though these engines span multiple power categories. Note that in some cases, FEL caps are based on a subset of a power category. The power categories are defined as follows:

(1) Engines with maximum power below 19 kW.

(2) Engines with maximum power at or above 19 kW but below 56 kW.

(3) Engines with maximum power at or above 56 kW but below 130 kW.

(4) Engines with maximum power at or above 130 kW but at or below 560 kW.

(5) Engines with maximum power above 560 kW.

Ramped-modal means relating to the ramped-modal type of steady-state test described in § 1039.505.

Rated speed means the maximum full-load governed speed for governed engines and the speed of maximum power for ungoverned engines.

Revoke has the meaning we give in 40 CFR 1068.30.

Round means to round numbers according to NIST Special Publication 811(incorporated by reference in § 1039.810), unless otherwise specified.

Scheduled maintenance means adjusting, repairing, removing, disassembling, cleaning, or replacing components or systems periodically to keep a part or system from failing, malfunctioning, or wearing prematurely. It also may mean actions you expect are necessary to correct an overt indication of failure or malfunction for which periodic maintenance is not appropriate.

Small-volume engine manufacturer means a small business engine manufacturer that had engine families certified to meet the requirements of 40 CFR part 89 before 2003 (40 CFR part 89, revised as of July 1, 2002), had annual U.S.-directed production of no more than 2,500 units in 2002 and all earlier calendar years, and has 1000 or fewer employees. For manufacturers owned by a parent company, the production limit applies to the production of the parent company and all its subsidiaries and the employee limit applies to the total number of employees of the parent company and all its subsidiaries.

Spark-ignition means relating to a gasoline-fueled engine or any other type of engine with a spark plug (or other sparking device) and with operating characteristics significantly similar to the theoretical Otto combustion cycle. Spark-ignition engines usually use a throttle to regulate intake air flow to control power during normal operation.

Steady-state means relating to emission tests in which engine speed and load are held at a finite set of essentially constant values. Steady-state tests are either discrete-mode tests or ramped-modal tests.

Sulfur-sensitive technology means an emission-control technology that experiences a significant drop in emission-control performance or emission-system durability when an engine is operated on low-sulfur fuel (*i.e.*, fuel with a sulfur concentration of 300 to 500 ppm) as compared to when it is operated on ultra low-sulfur fuel (*i.e.*, fuel with a sulfur concentration less than 15 ppm). Exhaust-gas recirculation is not a sulfur-sensitive technology.

Suspend has the meaning we give in 40 CFR 1068.30.

Test engine means an engine in a test sample.

Test sample means the collection of engines selected from the population of an engine family for emission testing. This may include testing for certification, production-line testing, or in-use testing.

Tier 1 means relating to the Tier 1 emission standards, as shown in 40 CFR 89.112.

Tier 2 means relating to the Tier 2 emission standards, as shown in 40 CFR 89.112.

Tier 3 means relating to the Tier 3 emission standards, as shown in 40 CFR 89.112.

Tier 4 means relating to the Tier 4 emission standards, as shown in § 1039.101 and § 1039.102. This includes the emission standards that are shown in § 1039.101 and § 1039.102 that are unchanged from Tier 2 or Tier 3 emission standards.

Total hydrocarbon means the combined mass of organic compounds measured by the specified procedure for measuring total hydrocarbon, expressed as a hydrocarbon with a hydrogen-to-carbon mass ratio of 1.85:1.

Total hydrocarbon equivalent means the sum of the carbon mass contributions of non-oxygenated hydrocarbons, alcohols and aldehydes, or other organic compounds that are measured separately as contained in a gas sample, expressed as exhaust hydrocarbon from petroleum-fueled engines. The hydrogen-to-carbon ratio of the equivalent hydrocarbon is 1.85:1.

Ultimate purchaser means, with respect to any new nonroad equipment or

new nonroad engine, the first person who in good faith purchases such new nonroad equipment or new nonroad engine for purposes other than resale.

Ultra low-sulfur diesel fuel means one of the following:

(1) For in-use fuels, *ultra low-sulfur diesel fuel* means a diesel fuel with a maximum sulfur concentration of 15 parts per million.

(2) For testing, *ultra low-sulfur diesel fuel* has the meaning we give in 40 CFR part 1065.

United States has the meaning we give in 40 CFR 1068.30.

Upcoming model year means for an engine family the model year after the one currently in production.

U.S.-directed production volume means the number of engine units, subject to the requirements of this part, produced by a manufacturer for which the manufacturer has a reasonable assurance that sale was or will be made to ultimate purchasers in the United States.

Useful life means the period during which the engine is designed to properly function in terms of reliability and fuel consumption, without being remanufactured, specified as a number of hours of operation or calendar years, whichever comes first. It is the period during which a new nonroad engine is required to comply with all applicable emission standards. *See* § 1039.101(g).

Variable-speed engine means an engine that is not a constant-speed engine.

Void has the meaning we give in 40 CFR 1068.30.

Volatile liquid fuel means any fuel other than diesel or biodiesel that is a liquid at atmospheric pressure and has a Reid Vapor Pressure higher than 2.0 pounds per square inch.

We (us, our) means the Administrator of the Environmental Protection Agency and any authorized representatives.

[69 FR 39213, June 29, 2004, as amended at 70 FR 40464, July 13, 2005]

§ 1039.805 What symbols, acronyms, and abbreviations does this part use?

The following symbols, acronyms, and abbreviations apply to this part:

CFR Code of Federal Regulations.
CO carbon monoxide.
CO2 carbon dioxide.
EPA Environmental Protection Agency.
FEL Family Emission Limit.
g/kW-hr grams per kilowatt-hour.
HC hydrocarbon.
kW kilowatts.
NIST National Institute of Standards and Technology.
NMHC nonmethane hydrocarbons.
NO_X oxides of nitrogen (NO and NO_2).
NTE not-to-exceed
PM particulate matter.
rpm revolutions per minute.
SAE Society of Automotive Engineers.
SEA Selective enforcement audit.
THC total hydrocarbon.
THCE total hydrocarbon equivalent.
TRU transportation refrigeration unit.
U.S.C. United States Code.

§ 1039.810 What materials does this part reference?

Documents listed in this section have been incorporated by reference into this part. The Director of the Federal Register approved the incorporation by reference as prescribed in 5 U.S.C. 552(a) and 1 CFR part 51. Anyone may inspect copies at the U.S. EPA, Air and Radiation Docket and Information Center, 1301 Constitution Ave., NW., Room B102, EPA West Building, Washington, DC 20460 or at the National Archives and Records Administration (NARA). For information on the availability of this material at NARA, call 202–741–6030, or go to: *http://www.archives.gov/federal_register/code_of_federal_regulations/ibr_locations.html.*

(a) *NIST material.* Table 1 of this section lists material from the National Institute of Standards and Technology that we have incorporated by reference. The first column lists the number and name of the material. The second column lists the sections of this part where we reference it. Anyone may purchase copies of these materials from the Government Printing Office, Washington, DC 20402 or download them from the Internet at *http://physics.nist.gov/Pubs/SP811/.* Table 1 follows:

TABLE 1 OF § 1039.810—NIST MATERIALS

Document number and name	Part 1039 reference
NIST Special Publication 811, Guide for the Use of the International System of Units (SI), 1995 Edition	1039.801

(b) *SAE material.* Table 2 of this section lists material from the Society of

Automotive Engineering that we have incorporated by reference. The first column lists the number and name of the material. The second column lists the sections of this part where we reference it. Anyone may purchase copies of these materials from the Society of Automotive Engineers, 400 Commonwealth Drive, Warrendale, PA 15096. Table 2 follows:

TABLE 2 OF § 1039.810—SAE MATERIALS

Document number and name	Part 1039 reference
SAE J1930, Electrical/Electronic Systems Diagnostic Terms, Definitions, Abbreviations, and Acronyms, revised May 1998 ...	1039.135

§ 1039.815 What provisions apply to confidential information?

(a) Clearly show what you consider confidential by marking, circling, bracketing, stamping, or some other method.

(b) We will store your confidential information as described in 40 CFR part 2. Also, we will disclose it only as specified in 40 CFR part 2. This applies both to any information you send us and to any information we collect from inspections, audits, or other site visits.

(c) If you send us a second copy without the confidential information, we will assume it contains nothing confidential whenever we need to release information from it.

(d) If you send us information without claiming it is confidential, we may make it available to the public without further notice to you, as described in 40 CFR 2.204.

§ 1039.820 How do I request a hearing?

(a) You may request a hearing under certain circumstances, as described elsewhere in this part. To do this, you must file a written request, including a description of your objection and any supporting data, within 30 days after we make a decision.

(b) For a hearing you request under the provisions of this part, we will approve your request if we find that your request raises a substantial factual issue.

(c) If we agree to hold a hearing, we will use the procedures specified in 40 CFR part 1068, subpart G.

APPENDIX I TO PART 1039 [RESERVED]

APPENDIX II TO PART 1039—STEADY-STATE DUTY CYCLES FOR CONSTANT-SPEED ENGINES

(a) The following duty cycle applies for discrete-mode testing of constant-speed engines:

D2 mode number	Engine speed [1]	Torque (percent) [2]	Weighting factors
1	Maximum test speed	100	0.05
2	Maximum test speed	75	0.25
3	Maximum test speed	50	0.30
4	Maximum test speed	25	0.30
5	Maximum test speed	10	0.10

[1] Maximum test speed is defined in 40 CFR part 1065.
[2] Except as noted in § 1039.505, the percent torque is relative to maximum test torque.

(b) The following duty cycle applies for ramped-modal testing of constant-speed engines:

RMC mode	Time in mode (seconds)	Engine speed	Torque (percent) [1,2]
1a Steady-state	53	Engine Governed	100.
1b Transition	20	Engine Governed	Linear transition.
2a Steady-state	101	Engine Governed	10.
2b Transition	20	Engine Governed	Linear transition.
3a Steady-state	277	Engine Governed	75.
3b Transition	20	Engine Governed	Linear transition.
4a Steady-state	339	Engine Governed	25.
4b Transition	20	Engine Governed	Linear transition.
5 Steady-state	350	Engine Governed	50.

[1] The percent torque is relative to maximum test torque.

[2] Advance from one mode to the next within a 20-second transition phase. During the transition phase, command a linear progression from the torque setting of the current mode to the torque setting of the next mode.

APPENDIX III TO PART 1039—STEADY-STATE DUTY CYCLES FOR VARIABLE-SPEED ENGINES WITH MAXIMUM POWER BELOW 19 KW

(a) The following duty cycle applies for discrete-mode testing of variable-speed engines with maximum power below 19 kW:

G2 mode number	Engine speed [1]	Observed torque (percent) [2]	Weighting factors
1	Maximum test speed	100	0.09
2	Maximum test speed	75	0.20
3	Maximum test speed	50	0.29
4	Maximum test speed	25	0.30
5	Maximum test speed	10	0.07
6	Idle	0	0.05

[1] Speed terms are defined in 40 CFR part 1065.
[2] The percent torque is relative to the maximum torque at the commanded test speed.

(b) The following duty cycle applies for ramped-modal testing of variable-speed engines with maximum power below 19 kW:

RMC mode	Time in mode (seconds)	Engine speed [1,3]	Torque (percent) [2,3]
1a Steady-state	41	Warm Idle	0.
1b Transition	20	Linear transition	Linear transition.
2a Steady-state	135	Maximum Test Speed	100.
2b Transition	20	Maximum Test Speed	Linear transition.
3a Steady-state	112	Maximum Test Speed	10.
3b Transition	20	Maximum Test Speed	Linear transition.
4a Steady-state	337	Maximum Test Speed	75.
4b Transition	20	Maximum Test Speed	Linear transition.
5a Steady-state	518	Maximum Test Speed	25.
5b Transition	20	Maximum Test Speed	Linear transition.
6a Steady-state	494	Maximum Test Speed	50.
6b Transition	20	Linear transition	Linear transition.
7 Steady-state	43	Warm Idle	0.

[1] Speed terms are defined in 40 CFR part 1065.
[2] The percent torque is relative to the maximum torque at the commanded engine speed.
[3] Advance from one mode to the next within a 20-second transition phase. During the transition phase, command a linear progression from the torque setting of the current mode to the torque setting of the next mode, and simultaneously command a similar linear progression for engine speed if there is a change in speed setting.

APPENDIX IV TO PART 1039—STEADY-STATE DUTY CYCLES FOR VARIABLE-SPEED ENGINES WITH MAXIMUM POWER AT OR ABOVE 19 KW

(a) The following duty cycle applies for discrete-mode testing of variable-speed engines with maximum power at or above 19 kW:

C1 mode number	Engine speed [1]	Observed torque (percent) [2]	Weighting factors
1	Maximum test speed	100	0.15
2	Maximum test speed	75	0.15
3	Maximum test speed	50	0.15
4	Maximum test speed	10	0.10
5	Intermediate test speed	100	0.10
6	Intermediate test speed	75	0.10
7	Intermediate test speed	50	0.10
8	Idle	0	0.15

[1] Speed terms are defined in 40 CFR part 1065.
[2] The percent torque is relative to the maximum torque at the commanded test speed.

(b) The following duty cycle applies for ramped-modal testing of variable-speed engines with maximum power at or above 19 kW:

RMC Mode	Time in mode (seconds)	Engine speed [1,3]	Torque (percent) [2,3]
1a Steady-state	126	Warm Idle	0.
1b Transition	20	Linear Transition [2]	Linear Transition.
2a Steady-state	159	Intermediate Speed	100.
2b Transition	20	Intermediate Speed	Linear Transition.
3a Steady-state	160	Intermediate Speed	50.
3b Transition	20	Intermediate Speed	Linear Transition.
4a Steady-state	162	Intermediate Speed	75.
4b Transition	20	Linear Transition	Linear Transition.
5a Steady-state	246	Maximum Test Speed	100.
5b Transition	20	Maximum Test Speed	Linear Transition.
6a Steady-state	164	Maximum Test Speed	10.
6b Transition	20	Maximum Test Speed	Linear Transition.
7a Steady-state	248	Maximum Test Speed	75.
7b Transition	20	Maximum Test Speed	Linear Transition.
8a Steady-state	247	Maximum Test Speed	50.
8b Transition	20	Linear Transition	Linear Transition.
9 Steady-state	128	Warm Idle	0.

[1] Speed terms are defined in 40 CFR part 1065.
[2] The percent torque is relative to the maximum torque at the commanded engine speed.
[3] Advance from one mode to the next within a 20-second transition phase. During the transition phase, command a linear progression from the torque setting of the current mode to the torque setting of the next mode, and simultaneously command a similar linear progression for engine speed if there is a change in speed setting.

APPENDIX V TO PART 1039 [RESERVED]

APPENDIX VI TO PART 1039—NONROAD COMPRESSION-IGNITION COMPOSITE TRANSIENT CYCLE

Time(s)	Normalized speed (percent)	Normalized torque (percent)[1]
1	0	0
2	0	0
3	0	0
4	0	0
5	0	0
6	0	0
7	0	0
8	0	0
9	0	0
10	0	0
11	0	0
12	0	0
13	0	0
14	0	0
15	0	0
16	0	0
17	0	0
18	0	0
19	0	0
20	0	0
21	0	0
22	0	0
23	0	0
24	1	3
25	1	3
26	1	3
27	1	3
28	1	3
29	1	3
30	1	6
31	1	6
32	2	1
33	4	13
34	7	18
35	9	21
36	17	20
37	33	42
38	57	46
39	44	33
40	31	0
41	22	27
42	33	43
43	80	49
44	105	47
45	98	70
46	104	36
47	104	65
48	96	71
49	101	62
50	102	51
51	102	50
52	102	46
53	102	41
54	102	31
55	89	2
56	82	0
57	47	1
58	23	1
59	1	3
60	1	8
61	1	3
62	1	5
63	1	6
64	1	4
65	1	4
66	0	6
67	1	4
68	9	21
69	25	56
70	64	26
71	60	31
72	63	20
73	62	24
74	64	8
75	58	44
76	65	10
77	65	12
78	68	23
79	69	30
80	71	30
81	74	15

Time(s)	Normalized speed (percent)	Normalized torque (percent)[1]
82	71	23
83	73	20
84	73	21
85	73	19
86	70	33
87	70	34
88	65	47
89	66	47
90	64	53
91	65	45
92	66	38
93	67	49
94	69	39
95	69	39
96	66	42
97	71	29
98	75	29
99	72	23
100	74	22
101	75	24
102	73	30
103	74	24
104	77	6
105	76	12
106	74	39
107	72	30
108	75	22
109	78	64
110	102	34
111	103	28
112	103	28
113	103	19
114	103	32
115	104	25
116	103	38
117	103	39
118	103	34
119	102	44
120	103	38
121	102	43
122	103	34
123	102	41
124	103	44
125	103	37
126	103	27
127	104	13
128	104	30
129	104	19
130	103	28
131	104	40
132	104	32
133	101	63
134	102	54
135	102	52
136	102	51
137	103	40
138	104	34
139	102	36
140	104	44
141	103	44
142	104	33
143	102	27
144	103	26
145	79	53
146	51	37
147	24	23
148	13	33
149	19	55
150	45	30
151	34	7
152	14	4
153	8	16
154	15	6
155	39	47
156	39	4
157	35	26
158	27	38
159	43	40
160	14	23
161	10	10
162	15	33
163	35	72
164	60	39
165	55	31
166	47	30
167	16	7
168	0	6
169	0	8
170	0	8
171	0	2
172	2	17
173	10	28
174	28	31
175	33	30
176	36	0
177	19	10
178	1	18
179	0	16
180	1	3
181	1	4
182	1	5
183	1	6
184	1	5
185	1	3
186	1	4
187	1	4
188	1	6
189	8	18
190	20	51
191	49	19
192	41	13
193	31	16
194	28	21
195	21	17
196	31	21
197	21	8
198	0	14
199	0	12
200	3	8
201	3	22
202	12	20
203	14	20
204	16	17
205	20	18
206	27	34
207	32	33
208	41	31
209	43	31
210	37	33
211	26	18
212	18	29
213	14	51
214	13	11
215	12	9
216	15	33
217	20	25
218	25	17
219	31	29
220	36	66
221	66	40
222	50	13
223	16	24
224	26	50
225	64	23

Time(s)	Normalized speed (percent)	Normalized torque (percent)[1]
226	81	20
227	83	11
228	79	23
229	76	31
230	68	24
231	59	33
232	59	3
233	25	7
234	21	10
235	20	19
236	4	10
237	5	7
238	4	5
239	4	6
240	4	6
241	4	5
242	7	5
243	16	28
244	28	25
245	52	53
246	50	8
247	26	40
248	48	29
249	54	39
250	60	42
251	48	18
252	54	51
253	88	90
254	103	84
255	103	85
256	102	84
257	58	66
258	64	97
259	56	80
260	51	67
261	52	96
262	63	62
263	71	6
264	33	16
265	47	45
266	43	56
267	42	27
268	42	64
269	75	74
270	68	96
271	86	61
272	66	0
273	37	0
274	45	37
275	68	96
276	80	97
277	92	96
278	90	97
279	82	96
280	94	81
281	90	85
282	96	65
283	70	96
284	55	95
285	70	96
286	79	96
287	81	71
288	71	60
289	92	65
290	82	63
291	61	47
292	52	37
293	24	0
294	20	7
295	39	48
296	39	54
297	63	58
298	53	31
299	51	24
300	48	40
301	39	0
302	35	18
303	36	16
304	29	17
305	28	21
306	31	15
307	31	10
308	43	19
309	49	63
310	78	61
311	78	46
312	66	65
313	78	97
314	84	63
315	57	26
316	36	22
317	20	34
318	19	8
319	9	10
320	5	5
321	7	11
322	15	15
323	12	9
324	13	27
325	15	28
326	16	28
327	16	31
328	15	20
329	17	0
330	20	34
331	21	25
332	20	0
333	23	25
334	30	58
335	63	96
336	83	60
337	61	0
338	26	0
339	29	44
340	68	97
341	80	97
342	88	97
343	99	88
344	102	86
345	100	82
346	74	79
347	57	79
348	76	97
349	84	97
350	86	97
351	81	98
352	83	83
353	65	96
354	93	72
355	63	60
356	72	49
357	56	27
358	29	0
359	18	13
360	25	11
361	28	24
362	34	53
363	65	83
364	80	44
365	77	46
366	76	50
367	45	52
368	61	98
369	61	69

Time(s)	Normalized speed (percent)	Normalized torque (percent)[1]
370	63	49
371	32	0
372	10	8
373	17	7
374	16	13
375	11	6
376	9	5
377	9	12
378	12	46
379	15	30
380	26	28
381	13	9
382	16	21
383	24	4
384	36	43
385	65	85
386	78	66
387	63	39
388	32	34
389	46	55
390	47	42
391	42	39
392	27	0
393	14	5
394	14	14
395	24	54
396	60	90
397	53	66
398	70	48
399	77	93
400	79	67
401	46	65
402	69	98
403	80	97
404	74	97
405	75	98
406	56	61
407	42	0
408	36	32
409	34	43
410	68	83
411	102	48
412	62	0
413	41	39
414	71	86
415	91	52
416	89	55
417	89	56
418	88	58
419	78	69
420	98	39
421	64	61
422	90	34
423	88	38
424	97	62
425	100	53
426	81	58
427	74	51
428	76	57
429	76	72
430	85	72
431	84	60
432	83	72
433	83	72
434	86	72
435	89	72
436	86	72
437	87	72
438	88	72
439	88	71
440	87	72
441	85	71
442	88	72
443	88	72
444	84	72
445	83	73
446	77	73
447	74	73
448	76	72
449	46	77
450	78	62
451	79	35
452	82	38
453	81	41
454	79	37
455	78	35
456	78	38
457	78	46
458	75	49
459	73	50
460	79	58
461	79	71
462	83	44
463	53	48
464	40	48
465	51	75
466	75	72
467	89	67
468	93	60
469	89	73
470	86	73
471	81	73
472	78	73
473	78	73
474	76	73
475	79	73
476	82	73
477	86	73
478	88	72
479	92	71
480	97	54
481	73	43
482	36	64
483	63	31
484	78	1
485	69	27
486	67	28
487	72	9
488	71	9
489	78	36
490	81	56
491	75	53
492	60	45
493	50	37
494	66	41
495	51	61
496	68	47
497	29	42
498	24	73
499	64	71
500	90	71
501	100	61
502	94	73
503	84	73
504	79	73
505	75	72
506	78	73
507	80	73
508	81	73
509	81	73
510	83	73
511	85	73
512	84	73
513	85	73

Time(s)	Normalized speed (percent)	Normalized torque (percent)[1]
514	86	73
515	85	73
516	85	73
517	85	72
518	85	73
519	83	73
520	79	73
521	78	73
522	81	73
523	82	72
524	94	56
525	66	48
526	35	71
527	51	44
528	60	23
529	64	10
530	63	14
531	70	37
532	76	45
533	78	18
534	76	51
535	75	33
536	81	17
537	76	45
538	76	30
539	80	14
540	71	18
541	71	14
542	71	11
543	65	2
544	31	26
545	24	72
546	64	70
547	77	62
548	80	68
549	83	53
550	83	50
551	83	50
552	85	43
553	86	45
554	89	35
555	82	61
556	87	50
557	85	55
558	89	49
559	87	70
560	91	39
561	72	3
562	43	25
563	30	60
564	40	45
565	37	32
566	37	32
567	43	70
568	70	54
569	77	47
570	79	66
571	85	53
572	83	57
573	86	52
574	85	51
575	70	39
576	50	5
577	38	36
578	30	71
579	75	53
580	84	40
581	85	42
582	86	49
583	86	57
584	89	68
585	99	61
586	77	29
587	81	72
588	89	69
589	49	56
590	79	70
591	104	59
592	103	54
593	102	56
594	102	56
595	103	61
596	102	64
597	103	60
598	93	72
599	86	73
600	76	73
601	59	49
602	46	22
603	40	65
604	72	31
605	72	27
606	67	44
607	68	37
608	67	42
609	68	50
610	77	43
611	58	4
612	22	37
613	57	69
614	68	38
615	73	2
616	40	14
617	42	38
618	64	69
619	64	74
620	67	73
621	65	73
622	68	73
623	65	49
624	81	0
625	37	25
626	24	69
627	68	71
628	70	71
629	76	70
630	71	72
631	73	69
632	76	70
633	77	72
634	77	72
635	77	72
636	77	70
637	76	71
638	76	71
639	77	71
640	77	71
641	78	70
642	77	70
643	77	71
644	79	72
645	78	70
646	80	70
647	82	71
648	84	71
649	83	71
650	83	73
651	81	70
652	80	71
653	78	71
654	76	70
655	76	70
656	76	71
657	79	71

Time(s)	Normalized speed (percent)	Normalized torque (percent)[1]
658	78	71
659	81	70
660	83	72
661	84	71
662	86	71
663	87	71
664	92	72
665	91	72
666	90	71
667	90	71
668	91	71
669	90	70
670	90	72
671	91	71
672	90	71
673	90	71
674	92	72
675	93	69
676	90	70
677	93	72
678	91	70
679	89	71
680	91	71
681	90	71
682	90	71
683	92	71
684	91	71
685	93	71
686	93	68
687	98	68
688	98	67
689	100	69
690	99	68
691	100	71
692	99	68
693	100	69
694	102	72
695	101	69
696	100	69
697	102	71
698	102	71
699	102	69
700	102	71
701	102	68
702	100	69
703	102	70
704	102	68
705	102	70
706	102	72
707	102	68
708	102	69
709	100	68
710	102	71
711	101	64
712	102	69
713	102	69
714	101	69
715	102	64
716	102	69
717	102	68
718	102	70
719	102	69
720	102	70
721	102	70
722	102	62
723	104	38
724	104	15
725	102	24
726	102	45
727	102	47
728	104	40
729	101	52
730	103	32
731	102	50
732	103	30
733	103	44
734	102	40
735	103	43
736	103	41
737	102	46
738	103	39
739	102	41
740	103	41
741	102	38
742	103	39
743	102	46
744	104	46
745	103	49
746	102	45
747	103	42
748	103	46
749	103	38
750	102	48
751	103	35
752	102	48
753	103	49
754	102	48
755	102	46
756	103	47
757	102	49
758	102	42
759	102	52
760	102	57
761	102	55
762	102	61
763	102	61
764	102	58
765	103	58
766	102	59
767	102	54
768	102	63
769	102	61
770	103	55
771	102	60
772	102	72
773	103	56
774	102	55
775	102	67
776	103	56
777	84	42
778	48	7
779	48	6
780	48	6
781	48	7
782	48	6
783	48	7
784	67	21
785	105	59
786	105	96
787	105	74
788	105	66
789	105	62
790	105	66
791	89	41
792	52	5
793	48	5
794	48	7
795	48	5
796	48	6
797	48	4
798	52	6
799	51	5
800	51	6
801	51	6

Time(s)	Normalized speed (percent)	Normalized torque (percent)[1]
802	52	5
803	52	5
804	57	44
805	98	90
806	105	94
807	105	100
808	105	98
809	105	95
810	105	96
811	105	92
812	104	97
813	100	85
814	94	74
815	87	62
816	81	50
817	81	46
818	80	39
819	80	32
820	81	28
821	80	26
822	80	23
823	80	23
824	80	20
825	81	19
826	80	18
827	81	17
828	80	20
829	81	24
830	81	21
831	80	26
832	80	24
833	80	23
834	80	22
835	81	21
836	81	24
837	81	24
838	81	22
839	81	22
840	81	21
841	81	31
842	81	27
843	80	26
844	80	26
845	81	25
846	80	21
847	81	20
848	83	21
849	83	15
850	83	12
851	83	9
852	83	8
853	83	7
854	83	6
855	83	6
856	83	6
857	83	6
858	83	6
859	76	5
860	49	8
861	51	7
862	51	20
863	78	52
864	80	38
865	81	33
866	83	29
867	83	22
868	83	16
869	83	12
870	83	9
871	83	8
872	83	7
873	83	6
874	83	6
875	83	6
876	83	6
877	83	6
878	59	4
879	50	5
880	51	5
881	51	5
882	51	5
883	50	5
884	50	5
885	50	5
886	50	5
887	50	5
888	51	5
889	51	5
890	51	5
891	63	50
892	81	34
893	81	25
894	81	29
895	81	23
896	80	24
897	81	24
898	81	28
899	81	27
900	81	22
901	81	19
902	81	17
903	81	17
904	81	17
905	81	15
906	80	15
907	80	28
908	81	22
909	81	24
910	81	19
911	81	21
912	81	20
913	83	26
914	80	63
915	80	59
916	83	100
917	81	73
918	83	53
919	80	76
920	81	61
921	80	50
922	81	37
923	82	49
924	83	37
925	83	25
926	83	17
927	83	13
928	83	10
929	83	8
930	83	7
931	83	7
932	83	6
933	83	6
934	83	6
935	71	5
936	49	24
937	69	64
938	81	50
939	81	43
940	81	42
941	81	31
942	81	30
943	81	35
944	81	28
945	81	27

Time(s)	Normalized speed (percent)	Normalized torque (percent)[1]
946	80	27
947	81	31
948	81	41
949	81	41
950	81	37
951	81	43
952	81	34
953	81	31
954	81	26
955	81	23
956	81	27
957	81	38
958	81	40
959	81	39
960	81	27
961	81	33
962	80	28
963	81	34
964	83	72
965	81	49
966	81	51
967	80	55
968	81	48
969	81	36
970	81	39
971	81	38
972	80	41
973	81	30
974	81	23
975	81	19
976	81	25
977	81	29
978	83	47
979	81	90
980	81	75
981	80	60
982	81	48
983	81	41
984	81	30
985	80	24
986	81	20
987	81	21
988	81	29
989	81	29
990	81	27
991	81	23
992	81	25
993	81	26
994	81	22
995	81	20
996	81	17
997	81	23
998	83	65
999	81	54
1000	81	50
1001	81	41
1002	81	35
1003	81	37
1004	81	29
1005	81	28
1006	81	24
1007	81	19
1008	81	16
1009	80	16
1010	83	23
1011	83	17
1012	83	13
1013	83	27
1014	81	58
1015	81	60
1016	81	46
1017	80	41
1018	80	36
1019	81	26
1020	86	18
1021	82	35
1022	79	53
1023	82	30
1024	83	29
1025	83	32
1026	83	28
1027	76	60
1028	79	51
1029	86	26
1030	82	34
1031	84	25
1032	86	23
1033	85	22
1034	83	26
1035	83	25
1036	83	37
1037	84	14
1038	83	39
1039	76	70
1040	78	81
1041	75	71
1042	86	47
1043	83	35
1044	81	43
1045	81	41
1046	79	46
1047	80	44
1048	84	20
1049	79	31
1050	87	29
1051	82	49
1052	84	21
1053	82	56
1054	81	30
1055	85	21
1056	86	16
1057	79	52
1058	78	60
1059	74	55
1060	78	84
1061	80	54
1062	80	35
1063	82	24
1064	83	43
1065	79	49
1066	83	50
1067	86	12
1068	64	14
1069	24	14
1070	49	21
1071	77	48
1072	103	11
1073	98	48
1074	101	34
1075	99	39
1076	103	11
1077	103	19
1078	103	7
1079	103	13
1080	103	10
1081	102	13
1082	101	29
1083	102	25
1084	102	20
1085	96	60
1086	99	38
1087	102	24
1088	100	31
1089	100	28

Time(s)	Normalized speed (percent)	Normalized torque (percent)[1]
1090	98	3
1091	102	26
1092	95	64
1093	102	23
1094	102	25
1095	98	42
1096	93	68
1097	101	25
1098	95	64
1099	101	35
1100	94	59
1101	97	37
1102	97	60
1103	93	98
1104	98	53
1105	103	13
1106	103	11
1107	103	11
1108	103	13
1109	103	10
1110	103	10
1111	103	11
1112	103	10
1113	103	10
1114	102	18
1115	102	31
1116	101	24
1117	102	19
1118	103	10
1119	102	12
1120	99	56
1121	96	59
1122	74	28
1123	66	62
1124	74	29
1125	64	74
1126	69	40
1127	76	2
1128	72	29
1129	66	65
1130	54	69
1131	69	56
1132	69	40
1133	73	54
1134	63	92
1135	61	67
1136	72	42
1137	78	2
1138	76	34
1139	67	80
1140	70	67
1141	53	70
1142	72	65
1143	60	57
1144	74	29
1145	69	31
1146	76	1
1147	74	22
1148	72	52
1149	62	96
1150	54	72
1151	72	28
1152	72	35
1153	64	68
1154	74	27
1155	76	14
1156	69	38
1157	66	59
1158	64	99
1159	51	86
1160	70	53
1161	72	36
1162	71	47
1163	70	42
1164	67	34
1165	74	2
1166	75	21
1167	74	15
1168	75	13
1169	76	10
1170	75	13
1171	75	10
1172	75	7
1173	75	13
1174	76	8
1175	76	7
1176	67	45
1177	75	13
1178	75	12
1179	73	21
1180	68	46
1181	74	8
1182	76	11
1183	76	14
1184	74	11
1185	74	18
1186	73	22
1187	74	20
1188	74	19
1189	70	22
1190	71	23
1191	73	19
1192	73	19
1193	72	20
1194	64	60
1195	70	39
1196	66	56
1197	68	64
1198	30	68
1199	70	38
1200	66	47
1201	76	14
1202	74	18
1203	69	46
1204	68	62
1205	68	62
1206	68	62
1207	68	62
1208	68	62
1209	68	62
1210	54	50
1211	41	37
1212	27	25
1213	14	12
1214	0	0
1215	0	0
1216	0	0
1217	0	0
1218	0	0
1219	0	0
1220	0	0
1221	0	0
1222	0	0
1223	0	0
1224	0	0
1225	0	0
1226	0	0
1227	0	0
1228	0	0
1229	0	0
1230	0	0
1231	0	0
1232	0	0
1233	0	0

Time(s)	Normalized speed (percent)	Normalized torque (percent)[1]
1234	0	0
1235	0	0
1236	0	0
1237	0	0
1238	0	0

[1] The percent torque is relative to maximum torque at the commanded engine speed.

[69 FR 39213, June 29, 2004, as amended at 70 FR 40465, July 13, 2005]

PART 1048—CONTROL OF EMISSIONS FROM NEW, LARGE NONROAD SPARK-IGNITION ENGINES

Subpart A—Overview and Applicability

Sec.
1048.1 Does this part apply to me?
1048.5 Which engines are excluded from this part's requirements?
1048.10 How is this part organized?
1048.15 Do any other regulation parts affect me?
1048.20 What requirements from this part apply to excluded stationary engines?

Subpart B—Emission Standards and Related Requirements

1048.101 What exhaust emission standards must my engines meet?
1048.105 What evaporative emissions standards and requirements apply?
1048.110 How must my engines diagnose malfunctions?
1048.115 What other requirements must my engines meet?
1048.120 What warranty requirements apply to me?
1048.125 What maintenance instructions must I give to buyers?
1048.130 What installation instructions must I give to equipment manufacturers?
1048.135 How must I label and identify the engines I produce?
1048.140 What are the provisions for certifying Blue Sky Series engines?
1048.145 Are there interim provisions that apply only for a limited time?

Subpart C—Certifying Engine Families

1048.201 What are the general requirements for obtaining a certificate of conformity?
1048.205 What must I include in my application?
1048.210 May I get preliminary approval before I complete my application?
1048.220 How do I amend the maintenance instructions in my application?
1048.225 How do I amend my application for certification to include new or modified engines?
1048.230 How do I select engine families?
1048.235 What emission testing must I perform for my application for a certificate of conformity?
1048.240 How do I demonstrate that my engine family complies with exhaust emission standards?
1048.245 How do I demonstrate that my engine family complies with evaporative emission standards?
1048.250 What records must I keep and make available to EPA?
1048.255 When may EPA deny, revoke, or void my certificate of conformity?

Subpart D—Testing Production-line Engines

1048.301 When must I test my production-line engines?
1048.305 How must I prepare and test my production-line engines?
1048.310 How must I select engines for production-line testing?
1048.315 How do I know when my engine family fails the production-line testing requirements?
1048.320 What happens if one of my production-line engines fails to meet emission standards?
1048.325 What happens if an engine family fails the production-line requirements?
1048.330 May I sell engines from an engine family with a suspended certificate of conformity?
1048.335 How do I ask EPA to reinstate my suspended certificate?
1048.340 When may EPA revoke my certificate under this subpart and how may I sell these engines again?
1048.345 What production-line testing records must I send to EPA?
1048.350 What records must I keep?

Subpart E—Testing In-use Engines

1048.401 What testing requirements apply to my engines that have gone into service?
1048.405 How does this program work?
1048.410 How must I select, prepare, and test my in-use engines?
1048.415 What happens if in-use engines do not meet requirements?
1048.420 What in-use testing information must I report to EPA?
1048.425 What records must I keep?

Subpart F—Test Procedures

1048.501 How do I run a valid emission test?
1048.505 How do I test engines using steady-state duty cycles, including ramped-modal testing?
1048.510 Which duty cycles do I use for transient testing?

1048.515 What are the field-testing procedures?

Subpart G—Compliance Provisions

1048.601 What compliance provisions apply to these engines?
1048.605 What provisions apply to engines certified under the motor-vehicle program?
1048.610 What provisions apply to vehicles certified under the motor-vehicle program?
1048.615 What are the provisions for exempting engines designed for lawn and garden applications?
1048.620 What are the provisions for exempting large engines fueled by natural gas?
1048.625 What special provisions apply to engines using noncommercial fuels?
1048.630 What are the provisions for exempting engines used solely for competition?
1048.635 What special provisions apply to branded engines?

Subpart H [Reserved]

Subpart I—Definitions and Other Reference Information

1048.801 What definitions apply to this part?
1048.805 What symbols, acronyms, and abbreviations does this part use?
1048.810 What materials does this part reference?
1048.815 What provisions apply to confidential information?
1048.820 How do I request a hearing?
APPENDIX I TO PART 1048—LARGE SPARK-IGNITION (SI) TRANSIENT CYCLE FOR CONSTANT-SPEED ENGINES
APPENDIX II TO PART 1048—LARGE SPARK-IGNITION (SI) COMPOSITE TRANSIENT CYCLE

AUTHORITY: 42 U.S.C. 7401–7671q.

SOURCE: 67 FR 68347, Nov. 8, 2002, unless otherwise noted.

Subpart A—Overview and Applicability

§ 1048.1 Does this part apply to me?

(a) The regulations in this part 1048 apply for all new, spark-ignition nonroad engines (defined in § 1048.801) with maximum engine power above 19 kW, except as provided in § 1048.5.

(b) This part 1048 applies for engines built on or after January 1, 2004. You need not follow this part for engines you produce before January 1, 2004. *See* §§ 1048.101 through 1048.115, § 1048.145, and the definition of model year in § 1048.801 for more information about the timing of new requirements.

(c) The definition of nonroad engine in 40 CFR 1068.30 excludes certain engines used in stationary applications. These engines are not required to comply with this part, except for the requirements in § 1048.20. In addition, if these engines are uncertified, the prohibitions in 40 CFR 1068.101 restrict their use as nonroad engines.

(d) In certain cases, the regulations in this part 1048 apply to engines with maximum engine power at or below 19 kW that would otherwise be covered by 40 CFR part 90. *See* 40 CFR 90.913 for provisions related to this allowance.

[70 FR 40465, July 13, 2005]

§ 1048.5 Which engines are excluded from this part's requirements?

This part does not apply to the following nonroad engines:

(a) Engines that are certified to meet the requirements of 40 CFR part 1051, or are otherwise subject to 40 CFR part 1051 (for example, engines used in snowmobiles and all-terrain vehicles).

(b) *Propulsion marine engines. See* 40 CFR part 91. This part applies with respect to auxiliary marine engines.

[70 FR 40465, July 13, 2005]

§ 1048.10 How is this part organized?

The regulations in this part 1048 contain provisions that affect both engine manufacturers and others. However, the requirements of this part are generally addressed to the engine manufacturer. The term ''you'' generally means the engine manufacturer, as defined in § 1048.801. This part 1048 is divided into the following subparts:

(a) Subpart A of this part defines the applicability of part 1048 and gives an overview of regulatory requirements.

(b) Subpart B of this part describes the emission standards and other requirements that must be met to certify engines under this part. Note that § 1048.145 discusses certain interim requirements and compliance provisions that apply only for a limited time.

(c) Subpart C of this part describes how to apply for a certificate of conformity.

(d) Subpart D of this part describes general provisions for testing production-line engines.

(e) Subpart E of this part describes general provisions for testing in-use engines.

(f) Subpart F of this part describes how to test your engines (including references to other parts of the Code of Federal Regulations).

(g) Subpart G of this part and 40 CFR part 1068 describe requirements, prohibitions, and other provisions that apply to engine manufacturers, equipment manufacturers, owners, operators, rebuilders, and all others.

(h) [Reserved]

(i) Subpart I of this part contains definitions and other reference information.

[70 FR 40465, July 13, 2005]

§ 1048.15 Do any other regulation parts affect me?

(a) Part 1065 of this chapter describes procedures and equipment specifications for testing engines. Subpart F of this part 1048 describes how to apply the provisions of part 1065 of this chapter to determine whether engines meet the emission standards in this part.

(b) The requirements and prohibitions of part 1068 of this chapter apply to everyone, including anyone who manufactures, imports, installs, owns, operates, or rebuilds any of the engines subject to this part 1048, or equipment containing these engines. Part 1068 of this chapter describes general provisions, including these seven areas:

(1) Prohibited acts and penalties for engine manufacturers, equipment manufacturers, and others.

(2) Rebuilding and other aftermarket changes.

(3) Exclusions and exemptions for certain engines.

(4) Importing engines.

(5) Selective enforcement audits of your production.

(6) Defect reporting and recall.

(7) Procedures for hearings.

(c) Other parts of this chapter apply if referenced in this part.

[70 FR 40465, July 13, 2005]

§ 1048.20 What requirements from this part apply to excluded stationary engines?

(a) You must add a permanent label or tag to each new engine you produce or import that is excluded under § 1048.1(c) as a stationary engine. To meet labeling requirements, you must do the following things:

(1) Attach the label or tag in one piece so no one can remove it without destroying or defacing it.

(2) Secure it to a part of the engine needed for normal operation and not normally requiring replacement.

(3) Make sure it is durable and readable for the engine's entire life.

(4) Write it in English.

(5) Follow the requirements in § 1048.135(g) regarding duplicate labels if the engine label is obscured in the final installation.

(b) Engine labels or tags required under this section must have the following information:

(1) Include the heading ''EMISSION CONTROL INFORMATION''.

(2) Include your full corporate name and trademark. You may instead include the full corporate name and trademark of another company you choose to designate.

(3) State the engine displacement (in liters) and maximum engine power.

(4) State: ''THIS ENGINE IS EXCLUDED FROM THE REQUIREMENTS OF 40 CFR PART 1048 AS A ''STATIONARY ENGINE.'' INSTALLING OR USING THIS ENGINE IN ANY OTHER APPLICATION MAY BE A VIOLATION OF FEDERAL LAW SUBJECT TO CIVIL PENALTY.''.

[70 FR 40466, July 13, 2005]

Subpart B—Emission Standards and Related Requirements

§ 1048.101 What exhaust emission standards must my engines meet?

The exhaust emission standards of this section apply by model year. You may certify engines earlier than we require. The Tier 1 standards apply only to steady-state testing, as described in paragraph (b) of this section. The Tier 2 standards apply to steady-state, transient, and field testing, as described in

paragraphs (a), (b), and (c) of this section.

(a) *Emission standards for transient testing.* Starting in the 2007 model year, transient exhaust emissions from your engines may not exceed the Tier 2 emission standards, as follows:

(1) Measure emissions using the applicable transient test procedures described in subpart F of this part.

(2) The Tier 2 $HC+NO_X$ standard is 2.7 g/kW-hr and the Tier 2 CO standard is 4.4 g/kW-hr. For severe-duty engines, the Tier 2 $HC+NO_X$ standard is 2.7 g/kW-hr and the Tier 2 CO standard is 130.0 g/kW-hr. The following engines are not subject to the transient standards in this paragraph (a):

(i) High-load engines.

(ii) Engines with maximum engine power above 560 kW.

(iii) Engines with maximum test speed above 3400 rpm.

(3) You may optionally certify your engines according to the following formula instead of the standards in paragraph (a)(1) of this section: $(HC+NO_X) \times CO^{0.784} \leq 8.57$. The $HC+NO_X$ and CO emission levels you select to satisfy this formula, rounded to the nearest 0.1 g/kW-hr, become the emission standards that apply for those engines. You may not select an $HC+NO_X$ emission standard higher than 2.7 g/kW-hr or a CO emission standard higher than 20.6 g/kW-hr. The following table illustrates a range of possible values under this paragraph (a)(3):

TABLE 1 OF § 1048.101—EXAMPLES OF POSSIBLE TIER 2 DUTY-CYCLE EMISSION STANDARDS

$HC+NO_X$ (g/kW-hr)	CO (g/kW-hr)
2.7	4.4
2.2	5.6
1.7	7.9
1.3	11.1
1.0	15.5
0.8	20.6

(b) *Standards for steady-state testing.* Except as we allow in paragraph (d) of this section, steady-state exhaust emissions from your engines may not exceed emission standards, as follows:

(1) Measure emissions using the applicable steady-state test procedures described in subpart F of this part:

(2) The following table shows the Tier 1 exhaust emission standards that apply to engines from 2004 through 2006 model years:

TABLE 2 OF § 1048.101—TIER 1 EMISSION STANDARDS (G/KW–HR)

Testing	General emission standards		Alternate emission standards for severe-duty engines	
	$HC+NO_X$	CO	$HC+NO_X$	CO
Certification and production-line testing	4.0	50.0	4.0	130.0
In-use testing	5.4	50.0	5.4	130.0

(3) Starting in the 2007 model year, steady-state exhaust emissions from your engines may not exceed the numerical emission standards in paragraph (a) of this section. See paragraph (d) of this section for alternate standards that apply for certain engines.

(c) *Standards for field testing.* Starting in 2007, exhaust emissions may not exceed field-testing standards, as follows:

(1) Measure emissions using the field-testing procedures in subpart F of this part:

(2) The $HC+NO_X$ standard is 3.8 g/kW-hr and the CO standard is 6.5 g/kW-hr. For severe-duty engines, the $HC+NO_X$ standard is 3.8 g/kW-hr and the CO standard is 200.0 g/kW-hr. For natural gas-fueled engines, you are not required to measure nonmethane hydrocarbon emissions or total hydrocarbon emissions for testing to show that the engine meets the emission standards of this paragraph (c); that is, you may assume HC emissions are equal to zero.

(3) You may apply the following formula to determine alternate emission standards that apply to your engines instead of the standards in paragraph (c)(1) of this section: $(HC+NO_X) \times CO^{0.791} \leq 16.78$. $HC+NO_X$ emission levels may not exceed 3.8 g/kW-hr and CO emission levels may not exceed 31.0 g/kW-hr. The following table illustrates a range of

possible values under this paragraph (c)(2):

TABLE 3 OF § 1048.101—EXAMPLES OF POSSIBLE TIER 2 FIELD-TESTING EMISSION STANDARDS

$HC+NO_X$ (g/kW-hr)	CO (g/kW-hr)
3.8	6.5
3.1	8.5
2.4	11.7
1.8	16.8
1.4	23.1
1.1	31.0

(d) *Engine protection.* For engines that require enrichment at high loads to protect the engine, you may ask to meet alternate Tier 2 standards of 2.7 g/kW-hr for $HC+NO_X$ and 31.0 g/kW-hr for CO instead of the emission standards described in paragraph (b)(2) of this section for steady-state testing. If we approve your request, you must still meet the transient testing standards in paragraph (a) of this section and the field-testing standards in paragraph (c) of this section. To qualify for this allowance, you must do all the following things:

(1) Show that enrichment is necessary to protect the engine from damage.

(2) Show that you limit enrichment to operating modes that require additional cooling to protect the engine from damage.

(3) Show in your application for certification that enrichment will rarely occur in use in the equipment in which your engines are installed. For example, an engine that is expected to operate 5 percent of the time in use with enrichment would clearly not qualify.

(4) Include in your installation instructions any steps necessary for someone installing your engines to prevent enrichment during normal operation (see § 1048.130).

(e) *Fuel types.* The exhaust emission standards in this section apply for engines using each type of fuel specified in 40 CFR part 1065, subpart H, on which the engines in the engine family are designed to operate, except for engines certified under § 1048.625. For engines certified under § 1048.625, the standards of this section apply to emissions measured using the specified test fuel. You must meet the numerical emission standards for hydrocarbons in this section based on the following types of hydrocarbon emissions for engines powered by the following fuels:

(1) Gasoline- and LPG-fueled engines: THC emissions.

(2) Natural gas-fueled engines: NMHC emissions.

(3) Alcohol-fueled engines: THCE emissions.

(f) *Small engines.* Certain engines with total displacement at or below 1000 cc may comply with the requirements of 40 CFR part 90 instead of complying with the requirements of this part, as described in § 1048.615.

(g) *Useful life.* Your engines must meet the exhaust emission standards in paragraphs (a) through (c) of this section over their full useful life. For severe-duty engines, the minimum useful life is 1,500 hours of operation or seven years, whichever comes first. For all other engines, the minimum useful life is 5,000 hours of operation or seven years, whichever comes first.

(1) Specify a longer useful life in hours for an engine family under either of two conditions:

(i) If you design, advertise, or market your engine to operate longer than the minimum useful life (your recommended hours until rebuild may indicate a longer design life).

(ii) If your basic mechanical warranty is longer than the minimum useful life.

(2) You may request in your application for certification that we approve a shorter useful life for an engine family. We may approve a shorter useful life, in hours of engine operation but not in years, if we determine that these engines will rarely operate longer than the shorter useful life. If engines identical to those in the engine family have already been produced and are in use, your demonstration must include documentation from such in-use engines. In other cases, your demonstration must include an engineering analysis of information equivalent to such in-use data, such as data from research engines or similar engine models that are already in production. Your demonstration must also include any overhaul interval that you recommend, any mechanical warranty that you offer for the engine or its components, and any

relevant customer design specifications. Your demonstration may include any other relevant information. The useful life value may not be shorter than any of the following:

(i) 1,000 hours of operation.

(ii) Your recommended overhaul interval.

(iii) Your mechanical warranty for the engine.

(h) *Applicability for testing.* The emission standards in this subpart apply to all testing, including certification, production-line, and in-use testing. For production-line testing, you must perform duty-cycle testing as specified in §§ 1048.505 and 1048.510. The field-testing standards of this section apply for those tests. You need not do additional testing of production-line engines to show that your engines meet the field-testing standards.

[67 FR 68347, Nov. 8, 2002, as amended at 70 FR 40466, July 13, 2005]

§ 1048.105 What evaporative emission standards and requirements apply?

The requirements of this section apply to all engines that are subject to this part, except auxiliary marine engines.

(a) Starting in the 2007 model year, engines that run on a volatile liquid fuel (such as gasoline), must meet the following evaporative emissions standards and requirements:

(1) Evaporative hydrocarbon emissions may not exceed 0.2 grams per gallon of fuel tank capacity when measured with the test procedures for evaporative emissions in subpart F of this part.

(2) For nonmetallic fuel lines, you must specify and use products that meet the Category 1 specifications in SAE J2260 (incorporated by reference in § 1048.810).

(3) Liquid fuel in the fuel tank may not reach boiling during continuous engine operation in the final installation at an ambient temperature of 30 °C. Note that gasoline with a Reid vapor pressure of 62 kPa (9 psi) begins to boil at about 53 °C.

(b) Note that § 1048.245 allows you to use design-based certification instead of generating new emission data.

(c) If other companies install your engines in their equipment, give them any appropriate instructions, as described in § 1048.130.

[67 FR 68347, Nov. 8, 2002, as amended at 70 FR 40467, July 13, 2005]

§ 1048.110 How must my engines diagnose malfunctions?

(a) *Equip your engines with a diagnostic system.* Starting in the 2007 model year, equip each engine with a diagnostic system that will detect significant malfunctions in its emission-control system using one of the following protocols:

(1) If your emission-control strategy depends on maintaining air-fuel ratios at stoichiometry, an acceptable diagnostic design would identify malfunction whenever the air-fuel ratio does not cross stoichiometry for one minute of intended closed-loop operation. You may use other diagnostic strategies if we approve them in advance.

(2) If the protocol described in paragraph (a)(1) of this section does not apply to your engine, you must use an alternative approach that we approve in advance. Your alternative approach must generally detect when the emission-control system is not functioning properly.

(b) *Use a malfunction-indicator light (MIL).* The MIL must be readily visible to the operator; it may be any color except red. When the MIL goes on, it must display ''Check Engine,'' ''Service Engine Soon,'' or a similar message that we approve. You may use sound in addition to the light signal. The MIL must go on under each of these circumstances:

(1) When a malfunction occurs, as described in paragraph (a) of this section.

(2) When the diagnostic system cannot send signals to meet the requirement of paragraph (b)(1) of this section.

(3) When the engine's ignition is in the ''key-on'' position before starting or cranking. The MIL should go out after engine starting if the system detects no malfunction.

(c) *Control when the MIL can go out.* If the MIL goes on to show a malfunction, it must remain on during all later engine operation until servicing corrects the malfunction. If the engine is not serviced, but the malfunction does not recur for three consecutive engine starts during which the malfunctioning

system is evaluated and found to be working properly, the MIL may stay off during later engine operation.

(d) *Store trouble codes in computer memory.* Record and store in computer memory any diagnostic trouble codes showing a malfunction that should illuminate the MIL. The stored codes must identify the malfunctioning system or component as uniquely as possible. Make these codes available through the data link connector as described in paragraph (g) of this section. You may store codes for conditions that do not turn on the MIL. The system must store a separate code to show when the diagnostic system is disabled (from malfunction or tampering).

(e) *Make data, access codes, and devices accessible.* Make all required data accessible to us without any access codes or devices that only you can supply. Ensure that anyone servicing your engine can read and understand the diagnostic trouble codes stored in the on-board computer with generic tools and information.

(f) *Consider exceptions for certain conditions.* Your diagnostic systems may disregard trouble codes for the first three minutes after engine starting. You may ask us to approve diagnostic-system designs that disregard trouble codes under other conditions that would produce an unreliable reading, damage systems or components, or cause other safety risks. This might include operation at altitudes over 8,000 feet.

(g) *Follow standard references for formats, codes, and connections.* Follow conventions defined in the following documents (incorporated by reference in § 1048.810) or ask us to approve using updated versions of (or variations from) these documents:

(1) ISO 9141–2 Road vehicles-Diagnostic systems—Part 2: CARB requirements for interchange of digital information, February 1994.

(2) ISO 14230–4 Road vehicles—Diagnostic systems—Keyword Protocol 2000—Part 4: Requirements for emission-related systems, June 2000.

§ 1048.115 What other requirements must my engines meet?

Engines subject to this part must meet the following requirements:

(a) *Crankcase emissions.* Crankcase emissions may not be discharged directly into the ambient atmosphere from any engine throughout its useful life, except as follows:

(1) Engines may discharge crankcase emissions to the ambient atmosphere if the emissions are added to the exhaust emissions (either physically or mathematically) during all emission testing. If you take advantage of this exception, you must do the following things:

(i) Manufacture the engines so that all crankcase emissions can be routed into the applicable sampling systems specified in 40 CFR part 1065.

(ii) Account for deterioration in crankcase emissions when determining exhaust deterioration factors.

(2) For purposes of this paragraph (a), crankcase emissions that are routed to the exhaust upstream of exhaust aftertreatment during all operation are not considered to be discharged directly into the ambient atmosphere.

(b) *Torque broadcasting.* Electronically controlled engines must broadcast their speed and output shaft torque (in newton-meters). Engines may alternatively broadcast a surrogate value for determining torque. Engines must broadcast engine parameters such that they can be read with a remote device, or broadcast them directly to their controller area networks. This information is necessary for testing engines in the field (see § 1048.515). This requirement applies beginning in the 2007 model year. Small-volume engine manufacturers may omit this requirement.

(c) *EPA access to broadcast information.* If we request it, you must provide us any hardware or tools we would need to readily read, interpret, and record all information broadcast by an engine's on-board computers and electronic control modules. If you broadcast a surrogate parameter for torque values, you must provide us what we need to convert these into torque units. We will not ask for hardware or tools if they are readily available commercially.

(d) [Reserved]

(e) *Adjustable parameters.* Engines that have adjustable parameters must meet all the requirements of this part for any adjustment in the physically

adjustable range. An operating parameter is not considered adjustable if you permanently seal it or if it is not normally accessible using ordinary tools. We may require that you set adjustable parameters to any specification within the adjustable range during any testing, including certification testing, selective enforcement auditing, or in-use testing.

(f) *Prohibited controls.* You may not design your engines with emission-control devices, systems, or elements of design that cause or contribute to an unreasonable risk to public health, welfare, or safety while operating. For example, this would apply if the engine emits a noxious or toxic substance it would otherwise not emit that contributes to such an unreasonable risk.

(g) *Defeat devices.* You may not equip your engines with a defeat device. A defeat device is an auxiliary emission-control device that reduces the effectiveness of emission controls under conditions that the engine may reasonably be expected to encounter during normal operation and use. This does not apply to auxiliary-emission control devices you identify in your certification application if any of the following is true:

(1) The conditions of concern were substantially included in the applicable test procedures described in subpart F of this part.

(2) You show your design is necessary to prevent engine (or equipment) damage or accidents.

(3) The reduced effectiveness applies only to starting the engine.

[67 FR 68347, Nov. 8, 2002, as amended at 70 FR 40467, July 13, 2005]

§ 1048.120 What emission-related warranty requirements apply to me?

(a) *General requirements.* You must warrant to the ultimate purchaser and each subsequent purchaser that the new nonroad engine, including all parts of its emission-control system, meets two conditions:

(1) It is designed, built, and equipped so it conforms at the time of sale to the ultimate purchaser with the requirements of this part.

(2) It is free from defects in materials and workmanship that may keep it from meeting these requirements.

(b) *Warranty period.* Your emission-related warranty must be valid for at least 50 percent of the engine's useful life in hours of operation or at least three years, whichever comes first. In the case of a high-cost warranted part, the warranty must be valid for at least 70 percent of the engine's useful life in hours of operation or at least five years, whichever comes first. You may offer an emission-related warranty more generous than we require. The emission-related warranty for the engine may not be shorter than any published warranty you offer without charge for the engine. Similarly, the emission-related warranty for any component may not be shorter than any published warranty you offer without charge for that component. If an engine has no hour meter, we base the warranty periods in this paragraph (b) only on the engine's age (in years). The warranty period begins when the engine is placed into service.

(c) *Components covered.* The emission-related warranty covers all components whose failure would increase an engine's emissions of any pollutant. This includes components listed in 40 CFR part 1068, Appendix I, and components from any other system you develop to control emissions. The emission-related warranty covers these components even if another company produces the component. Your emission-related warranty does not cover components whose failure would not increase an engine's emissions of any pollutant.

(d) *Limited applicability.* You may deny warranty claims under this section if the operator caused the problem through improper maintenance or use, as described in 40 CFR 1068.115.

(e) *Owners manual.* Describe in the owners manual the emission-related warranty provisions from this section that apply to the engine.

[70 FR 40467, July 13, 2005]

§ 1048.125 What maintenance instructions must I give to buyers?

Give the ultimate purchaser of each new nonroad engine written instructions for properly maintaining and using the engine, including the emission-control system. The maintenance

instructions also apply to service accumulation on your emission-data engines, as described in 40 CFR part 1065.

(a) *Critical emission-related maintenance.* Critical emission-related maintenance includes any adjustment, cleaning, repair, or replacement of critical emission-related components. This may also include additional emission-related maintenance that you determine is critical if we approve it in advance. You may schedule critical emission-related maintenance on these components if you meet the following conditions:

(1) You demonstrate that the maintenance is reasonably likely to be done at the recommended intervals on in-use engines. We will accept scheduled maintenance as reasonably likely to occur if you satisfy any of the following conditions:

(i) You present data showing that, if a lack of maintenance increases emissions, it also unacceptably degrades the engine's performance.

(ii) You present survey data showing that at least 80 percent of engines in the field get the maintenance you specify at the recommended intervals.

(iii) You provide the maintenance free of charge and clearly say so in maintenance instructions for the customer.

(iv) You otherwise show us that the maintenance is reasonably likely to be done at the recommended intervals.

(2) You may not schedule critical emission-related maintenance more frequently than the following minimum intervals, except as specified in paragraphs (a)(3), (b) and (c) of this section:

(i) For catalysts, fuel injectors, electronic control units, superchargers, and turbochargers: The useful life of the engine family.

(ii) For gaseous fuel-system components (cleaning without disassembly only) and oxygen sensors: 2,500 hours.

(3) If your engine family has an alternate useful life under §1048.101(g) that is shorter than the period specified in paragraph (a)(2)(ii) of this section, you may not schedule critical emission-related maintenance more frequently than the alternate useful life, except as specified in paragraph (c) of this section.

(b) *Recommended additional maintenance.* You may recommend any additional amount of maintenance on the components listed in paragraph (a) of this section, as long as you state clearly that these maintenance steps are not necessary to keep the emission-related warranty valid. If operators do the maintenance specified in paragraph (a) of this section, but not the recommended additional maintenance, this does not allow you to disqualify those engines from in-use testing or deny a warranty claim. Do not take these maintenance steps during service accumulation on your emission-data engines.

(c) *Special maintenance.* You may specify more frequent maintenance to address problems related to special situations, such as substandard fuel or atypical engine operation. For example, you may specify more frequent cleaning of fuel system components for engines you have reason to believe will be using fuel that causes substantially more engine performance problems than commercial fuels of the same type that are generally available across the United States. You must clearly state that this additional maintenance is associated with the special situation you are addressing.

(d) *Noncritical emission-related maintenance.* You may schedule any amount of emission-related inspection or maintenance that is not covered by paragraph (a) of this section, as long as you state in the owners manual that these steps are not necessary to keep the emission-related warranty valid. If operators fail to do this maintenance, this does not allow you to disqualify those engines from in-use testing or deny a warranty claim. Do not take these inspection or maintenance steps during service accumulation on your emission-data engines.

(e) *Maintenance that is not emission-related.* For maintenance unrelated to emission controls, you may schedule any amount of inspection or maintenance. You may also take these inspection or maintenance steps during service accumulation on your emission-data engines, as long as they are reasonable and technologically necessary. This might include adding engine oil,

changing air, fuel, or oil filters, servicing engine-cooling systems, and adjusting idle speed, governor, engine bolt torque, valve lash, or injector lash. You may perform this nonemission-related maintenance on emission-data engines at the least frequent intervals that you recommend to the ultimate purchaser (but not the intervals recommended for severe service).

(f) *Source of parts and repairs.* State clearly on the first page of your written maintenance instructions that a repair shop or person of the owner's choosing may maintain, replace, or repair emission-control devices and systems. Your instructions may not require components or service identified by brand, trade, or corporate name. Also, do not directly or indirectly condition your warranty on a requirement that the engine be serviced by your franchised dealers or any other service establishments with which you have a commercial relationship. You may disregard the requirements in this paragraph (f) if you do one of two things:

(1) Provide a component or service without charge under the purchase agreement.

(2) Get us to waive this prohibition in the public's interest by convincing us the engine will work properly only with the identified component or service.

(g) *Payment for scheduled maintenance.* Owners are responsible for properly maintaining their engines. This generally includes paying for scheduled maintenance. However, manufacturers must pay for scheduled maintenance during the useful life if it meets all the following criteria:

(1) Each affected component was not in general use on similar engines before January 1, 2004.

(2) The primary function of each affected component is to reduce emissions.

(3) The cost of the scheduled maintenance is more than 2 percent of the price of the engine.

(4) Failure to perform the maintenance would not cause clear problems that would significantly degrade the engine's performance.

(h) *Owners manual.* Explain the owner's responsibility for proper maintenance in the owners manual.

[70 FR 40468, July 13, 2005]

§ 1048.130 What installation instructions must I give to equipment manufacturers?

(a) If you sell an engine for someone else to install in a piece of nonroad equipment, give the engine installer instructions for installing it consistent with the requirements of this part. Include all information necessary to ensure that an engine will be installed in its certified configuration.

(b) Make sure these instructions have the following information:

(1) Include the heading: ''Emission-related installation instructions''.

(2) State: ''Failing to follow these instructions when installing a certified engine in a piece of nonroad equipment violates federal law (40 CFR 1068.105(b)), subject to fines or other penalties as described in the Clean Air Act.''.

(3) Describe the instructions needed to properly install the exhaust system and any other components. Include instructions consistent with the requirements of § 1048.205(v).

(4) Describe the steps needed to control evaporative emissions, as described in §§ 1048.105 and 1048.245.

(5) Describe any necessary steps for installing the diagnostic system described in § 1048.110.

(6) Describe any limits on the range of applications needed to ensure that the engine operates consistently with your application for certification. For example, if your engines are certified only for constant-speed operation, tell equipment manufacturers not to install the engines in variable-speed applications. Also, if you need to avoid sustained high-load operation to meet the field-testing emission standards we specify in § 1048.101(c) or to comply with the provisions of § 1048.101(d), describe how the equipment manufacturer must properly size the engines for a given application.

(7) Describe any other instructions to make sure the installed engine will operate according to design specifications in your application for certification.

This may include, for example, instructions for installing aftertreatment devices when installing the engines.

(8) State: ''If you install the engine in a way that makes the engine's emission control information label hard to read during normal engine maintenance, you must place a duplicate label on the equipment, as described in 40 CFR 1068.105.''.

(c) You do not need installation instructions for engines you install in your own equipment.

(d) Provide instructions in writing or in an equivalent format. For example, you may post instructions on a publicly available Web site for downloading or printing. If you do not provide the instructions in writing, explain in your application for certification how you will ensure that each installer is informed of the installation requirements.

[67 FR 68347, Nov. 8, 2002, as amended at 70 FR 40469, July 13, 2005]

§ 1048.135 How must I label and identify the engines I produce?

(a) Assign each engine a unique identification number and permanently affix, engrave, or stamp it on the engine in a legible way.

(b) At the time of manufacture, affix a permanent and legible label identifying each engine. The label must be—

(1) Attached in one piece so it is not removable without being destroyed or defaced.

(2) Secured to a part of the engine needed for normal operation and not normally requiring replacement.

(3) Durable and readable for the engine's entire life.

(4) Written in English.

(c) The label must—

(1) Include the heading ''EMISSION CONTROL INFORMATION''.

(2) Include your full corporate name and trademark. You may identify another company and use its trademark instead of yours if you comply with the provisions of § 1048.635.

(3) Include EPA's standardized designation for the engine family (and subfamily, where applicable).

(4) State the engine's displacement (in liters); however, you may omit this from the label if all the engines in the engine family have the same per-cylinder displacement and total displacement.

(5) State the date of manufacture [MONTH and YEAR]. You may omit this from the label if you keep a record of the engine-manufacture dates and provide it to us upon request.

(6) Identify the emission-control system. Use terms and abbreviations consistent with SAE J1930 (incorporated by reference in § 1048.810). You may omit this information from the label if there is not enough room for it and you put it in the owners manual instead.

(7) State: ''THIS ENGINE IS CERTIFIED TO OPERATE ON [specify operating fuel or fuels].''.

(8) Identify any requirements for fuel and lubricants. You may omit this information from the label if there is not enough room for it and you put it in the owners manual instead.

(9) List specifications and adjustments for engine tuneups; show the proper position for the transmission during tuneup and state which accessories should be operating. You may omit this information from the label if there is not enough room for it and you put it in the owners manual instead.

(10) State the useful life for your engine family if it has a longer useful life under § 1048.101(g)(1) or a shortened useful life under § 1048.101(g)(2).

(11) Identify the emission standards to which you have certified the engine.

(12) State: ''THIS ENGINE COMPLIES WITH U.S. EPA REGULATIONS FOR [MODEL YEAR] LARGE NONROAD SI ENGINES.''.

(13) If your engines are certified only for constant-speed operation, state: ''USE IN CONSTANT–SPEED APPLICATIONS ONLY''.

(14) If your engines are certified only for variable-speed operation, state: ''USE IN VARIABLE–SPEED APPLICATIONS ONLY''.

(15) If your engines are certified only for high-load engines, state: ''THIS ENGINE IS NOT INTENDED FOR OPERATION AT LESS THAN 75 PERCENT OF FULL LOAD.''.

(16) If you certify your engines under § 1048.101(d) (and show in your application for certification that in-use engines will experience infrequent high-load operation), state: ''THIS ENGINE IS NOT INTENDED FOR OPERATION

AT MORE THAN__PERCENT OF FULL LOAD.''. Specify the appropriate percentage of full load based on the nature of the engine protection. You may add other statements to discourage operation in engine-protection modes.

(17) If your engines are certified to the voluntary standards in § 1048.140, state: ''BLUE SKY SERIES''.

(d) You may add information to the emission control information label to identify other emission standards that the engine meets or does not meet (such as California standards). You may also add other information to ensure that the engine will be properly maintained and used.

(e) You may ask us to approve modified labeling requirements in this part 1048 if you show that it is necessary or appropriate. We will approve your request if your alternate label is consistent with the requirements of this part.

(f) If you obscure the engine label while installing the engine in the equipment such that the label will be hard to read during normal maintenance, you must place a duplicate label on the equipment. If others install your engine in their equipment in a way that obscures the engine label, we require them to add a duplicate label on the equipment (see 40 CFR 1068.105); in that case, give them the number of duplicate labels they request and keep the following records for at least five years:

(1) Written documentation of the request from the equipment manufacturer.

(2) The number of duplicate labels you send and the date you sent them.

[70 FR 40469, July 13, 2005]

§ 1048.140 What are the provisions for certifying Blue Sky Series engines?

This section defines voluntary standards for a recognized level of superior emission control for engines designated as ''Blue Sky Series'' engines. Blue Sky Series engines must meet one of the following standards:

(a) For the 2003 model year, to receive a certificate of conformity, a ''Blue Sky Series'' engine family must meet all the requirements in this part that apply to 2004 model year engines. This includes all testing and reporting requirements.

(b) For the 2003 through 2006 model years, to receive a certificate of conformity, a ''Blue Sky Series'' engine family must meet all the requirements in this part that apply to 2007 model year engines. This includes all testing and reporting requirements.

(c) For any model year, to receive a certificate of conformity as a ''Blue Sky Series'' engine family must meet all the requirements in this part while certifying to one of the sets of exhaust emission standards in the following table:

TABLE 1 OF § 1048.140—LONG-TERM STANDARDS FOR BLUE SKY SERIES ENGINES (G/KW-HR)

Standards for steady-state and transient test procedures		Standards for field-testing procedures	
$HC+NO_X$	CO	$HC+NO_X$	CO
0.80	4.4	1.10	6.6
0.60	4.4	0.84	6.6
0.40	4.4	0.56	6.6
0.20	4.4	0.28	6.6
0.10	4.4	0.14	6.6

(d) If you certify an engine family under this section, it is subject to all the requirements of this part as if these voluntary standards were mandatory.

[67 FR 68347, Nov. 8, 2002, as amended at 70 FR 40470, July 13, 2005]

§ 1048.145 Are there interim provisions that apply only for a limited time?

The provisions in this section apply instead of other provisions in this part. This section describes when these interim provisions expire.

(a) *Family banking.* This paragraph (a) allows you to reduce the number of engines subject to the Tier 2 standards by certifying some of your engines earlier than otherwise required, as follows:

(1) For early-compliant engines to generate offsets under this paragraph (a), you must meet the following general provisions:

(i) You must begin actual production of early-compliant engines by September 1, 2006.

(ii) Engines you produce after December 31, 2006 may not generate offsets.

(iii) Offset-generating engines must be certified to the Tier 2 standards and requirements under this part 1048.

(iv) If you certify engines under the voluntary standards of §1048.140, you may not use them in your calculation under this paragraph (a).

(2) For every offset-generating engine certified to the Tier 2 standards, you may reduce the number of engines with the same maximum engine power that are required to meet the Tier 2 standards in later model years by one engine. You may calculate power-weighted offsets based on actual U.S.-directed sales volumes. For example, if you produce a total of 1,000 engines in 2005 and 2006 with an average maximum power of 60 kW certified to the Tier 2 standards, you may delay certification to that tier of standards for up to 60,000 kW-engine-years in any of the following ways:

(i) Delay certification of up to 600 engines with an average maximum power of 100 kW for one model year.

(ii) Delay certification of up to 200 engines with an average maximum power of 100 kW for three consecutive model years.

(iii) Delay certification of up to 400 engines with an average maximum power of 100 kW for one model year and up to 50 engines with an average maximum power of 200 kW for two model years.

(3) Offset-using engines (that is, those not required to certify to the Tier 2 standards) must be certified to the Tier 1 standards and requirements of this part 1048. You may delay compliance for up to three model years.

(4) By January 31 of each year in which you use the provisions of this paragraph (a), send us a report describing how many offset-generating or offset-using engines you produced in the preceding model year.

(b) *Hydrocarbon standards.* For 2004 through 2006 model years, engine manufacturers may use nonmethane hydrocarbon measurements to demonstrate compliance with applicable emission standards.

(c) [Reserved]

(d) *Tier 1 deterioration factors.* For Tier 1 engines, base the deterioration factor from §1048.240 on 3500 hours of operation. We may assign a deterioration factor for a Tier 1 engine family, but this would not affect your need to meet all emission standards that apply.

(e) [Reserved]

(f) *Optional early field testing.* You may optionally use the field-testing procedures in subpart F of this part for any in-use testing required under subpart E of this part to show that you meet Tier 1 standards. In this case, the same Tier 1 in-use emission standards apply to both steady-state testing in the laboratory and field testing.

(g) *Small-volume provisions.* If you qualify for the hardship provisions in §1068.250 of this chapter, we may approve extensions of up to four years total.

(h) *2004 certification.* For the 2004 model year, you may choose to have the emission standards and other requirements that apply to these engines in California serve as the emission standards and other requirements applicable under this part, instead of those in subpart A of this part. To ask for a certificate under this paragraph (h), send us the application for certification that you prepare for the California Air Resources Board instead of the information we otherwise require in §1048.205.

(i) *Recreational vehicles.* Engines or vehicles identified in the scope of 40 CFR part 1051 that are not yet regulated under that part are excluded from the requirements of this part. For example, snowmobiles produced in 2004 are not subject to the emission standards in this part. Once emission standards apply to these engines and vehicles, they are excluded from the requirements of this part under §1048.5(a)(1).

[67 FR 68347, Nov. 8, 2002, as amended at 70 FR 40470, July 13, 2005]

Subpart C—Certifying Engine Families

§1048.201 What are the general requirements for obtaining a certificate of conformity?

(a) You must send us a separate application for a certificate of conformity for each engine family. A certificate of conformity is valid from the indicated effective date until December

31 of the model year for which it is issued.

(b) The application must contain all the information required by this part and must not include false or incomplete statements or information (see § 1048.255).

(c) We may ask you to include less information than we specify in this subpart, as long as you maintain all the information required by § 1048.250.

(d) You must use good engineering judgment for all decisions related to your application (see 40 CFR 1068.5).

(e) An authorized representative of your company must approve and sign the application.

(f) See § 1048.255 for provisions describing how we will process your application.

(g) We may require you to deliver your test engines to a facility we designate for our testing (see § 1048.235(c)).

[70 FR 40470, July 13, 2005]

§ 1048.205 What must I include in my application?

This section specifies the information that must be in your application, unless we ask you to include less information under § 1048.201(c). We may require you to provide additional information to evaluate your application.

(a) Describe the engine family's specifications and other basic parameters of the engine's design and emission controls. List the fuel types on which your engines are designed to operate (for example, gasoline and natural gas). List each distinguishable engine configuration in the engine family.

(b) Explain how the emission-control system operates. Describe in detail all system components for controlling exhaust emissions, including all auxiliary-emission control devices (AECDs) and all fuel-system components you will install on any production or test engine. Describe the evaporative emission controls. Identify the part number of each component you describe. For this paragraph (b), treat as separate AECDs any devices that modulate or activate differently from each other. Include all the following:

(1) Give a general overview of the engine, the emission-control strategies, and all AECDs.

(2) Describe each AECD's general purpose and function.

(3) Identify the parameters that each AECD senses (including measuring, estimating, calculating, or empirically deriving the values). Include equipment-based parameters and state whether you simulate them during testing with the applicable procedures.

(4) Describe the purpose for sensing each parameter.

(5) Identify the location of each sensor the AECD uses.

(6) Identify the threshold values for the sensed parameters that activate the AECD.

(7) Describe the parameters that the AECD modulates (controls) in response to any sensed parameters, including the range of modulation for each parameter, the relationship between the sensed parameters and the controlled parameters and how the modulation achieves the AECD's stated purpose. Use graphs and tables, as necessary.

(8) Describe each AECD's specific calibration details. This may be in the form of data tables, graphical representations, or some other description.

(9) Describe the hierarchy among the AECDs when multiple AECDs sense or modulate the same parameter. Describe whether the strategies interact in a comparative or additive manner and identify which AECD takes precedence in responding, if applicable.

(10) Explain the extent to which the AECD is included in the applicable test procedures specified in subpart F of this part.

(11) Do the following additional things for AECDs designed to protect engines or equipment:

(i) Identify the engine and/or equipment design limits that make protection necessary and describe any damage that would occur without the AECD.

(ii) Describe how each sensed parameter relates to the protected components' design limits or those operating conditions that cause the need for protection.

(iii) Describe the relationship between the design limits/parameters being protected and the parameters sensed or calculated as surrogates for those design limits/parameters, if applicable.

(iv) Describe how the modulation by the AECD prevents engines and/or equipment from exceeding design limits.

(v) Explain why it is necessary to estimate any parameters instead of measuring them directly and describe how the AECD calculates the estimated value, if applicable.

(vi) Describe how you calibrate the AECD modulation to activate only during conditions related to the stated need to protect components and only as needed to sufficiently protect those components in a way that minimizes the emission impact.

(c) Explain how the engine diagnostic system works, describing especially the engine conditions (with the corresponding diagnostic trouble codes) that cause the malfunction-indicator light to go on. Propose what you consider to be extreme conditions under which the diagnostic system should disregard trouble codes, as described in § 1048.110.

(d) Describe the engines you selected for testing and the reasons for selecting them.

(e) Describe the test equipment and procedures that you used, including any special or alternate test procedures you used (see § 1048.501).

(f) Describe how you operated the emission-data engine before testing, including the duty cycle and the number of engine operating hours used to stabilize emission levels. Explain why you selected the method of service accumulation. Describe any scheduled maintenance you did.

(g) List the specifications of each test fuel to show that it falls within the required ranges we specify in 40 CFR part 1065, subpart H.

(h) Identify the engine family's useful life.

(i) Include the maintenance instructions you will give to the ultimate purchaser of each new nonroad engine (see § 1048.125).

(j) Include the emission-related installation instructions you will provide if someone else installs your engines in a piece of nonroad equipment (see § 1048.130).

(k) Identify each high-cost warranted part and show us how you calculated its replacement cost, including the estimated retail cost of the part, labor rates, and labor hours to diagnose and replace defective parts.

(l) Describe your emission control information label (see § 1048.135).

(m) Identify the emission standards to which you are certifying engines in the engine family.

(n) Identify the engine family's deterioration factors and describe how you developed them (see § 1048.240). Present any emission test data you used for this.

(o) State that you operated your emission-data engines as described in the application (including the test procedures, test parameters, and test fuels) to show you meet the requirements of this part.

(p) Present emission data to show that you meet emission standards, as follows:

(1) Present exhaust emission data for HC, NO_X, and CO on an emission-data engine to show your engines meet the applicable duty-cycle emission standards we specify in § 1048.101. Show emission figures before and after applying adjustment factors for deterioration factors for each engine. Include test data for each type of fuel from 40 CFR part 1065, subpart H, on which you intend for engines in the engine family to operate (for example, gasoline, liquefied petroleum gas, methanol, or natural gas). If we specify more than one grade of any fuel type (for example, a summer grade and winter grade of gasoline), you only need to submit test data for one grade, unless the regulations of this part specify otherwise for your engine. Note that § 1048.235 allows you to submit an application in certain cases without new emission data.

(2) If your engine family includes a volatile liquid fuel (and you do not use design-based certification under § 1048.245), present evaporative test data to show your vehicles meet the evaporative emission standards we specify in subpart B of this part. Show these figures before and after applying deterioration factors, where applicable.

(q) State that all the engines in the engine family comply with the field-testing emission standards we specify in § 1048.104 for all normal operation and use when tested as specified in

§ 1048.515. Describe any relevant testing, engineering analysis, or other information in sufficient detail to support your statement.

(r) For engines with maximum engine power above 560 kW, include information showing how your emission controls will function during normal in-use transient operation. For example, this might include the following:

(1) Emission data from transient testing of engines using measurement systems designed for measuring in-use emissions.

(2) Comparison of the engine design for controlling transient emissions with that from engines for which you have emission data over the transient duty cycle for certification.

(3) Detailed descriptions of control algorithms and other design parameters for controlling transient emissions.

(s) Report all test results, including those from invalid tests or from any other tests, whether or not they were conducted according to the test procedures of subpart F of this part. If you measure CO_2, report those emission levels. We may ask you to send other information to confirm that your tests were valid under the requirements of this part and 40 CFR part 1065.

(t) Describe all adjustable operating parameters (see § 1048.115(e)), including production tolerances. Include the following in your description of each parameter:

(1) The nominal or recommended setting.

(2) The intended physically adjustable range.

(3) The limits or stops used to establish adjustable ranges.

(4) Information showing why the limits, stops, or other means of inhibiting adjustment are effective in preventing adjustment of parameters on in-use engines to settings outside your intended physically adjustable ranges.

(u) Provide the information to read, record, and interpret all the information broadcast by an engine's onboard computers and electronic control units. State that, upon request, you will give us any hardware, software, or tools we would need to do this. If you broadcast a surrogate parameter for torque values, you must provide us what we need to convert these into torque units. You may reference any appropriate publicly released standards that define conventions for these messages and parameters. Format your information consistent with publicly released standards.

(v) Confirm that your emission-related installation instructions specify how to ensure that sampling of exhaust emissions will be possible after engines are installed in equipment and placed in service. If this cannot be done by simply adding a 20-centimeter extension to the exhaust pipe, show how to sample exhaust emissions in a way that prevents diluting the exhaust sample with ambient air.

(w) State whether your engine will operate in variable-speed applications, constant-speed applications, or both. If your certification covers only constant-speed or only variable-speed applications, describe how you will prevent use of these engines in applications for which they are not certified.

(x) Unconditionally certify that all the engines in the engine family comply with the requirements of this part, other referenced parts of the CFR, and the Clean Air Act.

(y) Include estimates of U.S.-directed production volumes.

(z) Include other applicable information, such as information specified in this part or part 1068 of this chapter related to requests for exemptions.

(aa) Name an agent for service of process located in the United States. Service on this agent constitutes service on you or any of your officers or employees for any action by EPA or otherwise by the United States related to the requirements of this part.

[70 FR 40470, July 13, 2005]

§ 1048.210 May I get preliminary approval before I complete my application?

If you send us information before you finish the application, we will review it and make any appropriate determinations, especially for questions related to engine family definitions, auxiliary emission-control devices, deterioration factors, testing for service accumulation, and maintenance. Decisions made under this section are considered to be preliminary approval, subject to final

review and approval. We will generally not reverse a decision where we have given you preliminary approval, unless we find new information supporting a different decision. If you request preliminary approval related to the upcoming model year or the model year after that, we will make best-efforts to make the appropriate determinations as soon as practicable. We will generally not provide preliminary approval related to a future model year more than two years ahead of time.

[70 FR 40472, July 13, 2005]

§ 1048.220 How do I amend the maintenance instructions in my application?

You may amend your emission-related maintenance instructions after you submit your application for certification, as long as the amended instructions remain consistent with the provisions of § 1048.125. You must send the Designated Compliance Officer a request to amend your application for certification for an engine family if you want to change the emission-related maintenance instructions in a way that could affect emissions. In your request, describe the proposed changes to the maintenance instructions. We will disapprove your request if we determine that the amended instructions are inconsistent with maintenance you performed on emission-data engines.

(a) If you are decreasing the specified maintenance, you may distribute the new maintenance instructions to your customers 30 days after we receive your request, unless we disapprove your request. We may approve a shorter time or waive this requirement.

(b) If your requested change would not decrease the specified maintenance, you may distribute the new maintenance instructions anytime after you send your request. For example, this paragraph (b) would cover adding instructions to increase the frequency of a maintenance step for engines in severe-duty applications.

(c) You need not request approval if you are making only minor corrections (such as correcting typographical mistakes), clarifying your maintenance instructions, or changing instructions for maintenance unrelated to emission control.

[70 FR 40472, July 13, 2005]

§ 1048.225 How do I amend my application for certification to include new or modified engines?

Before we issue you a certificate of conformity, you may amend your application to include new or modified engine configurations, subject to the provisions of this section. After we have issued your certificate of conformity, you may send us an amended application requesting that we include new or modified engine configurations within the scope of the certificate, subject to the provisions of this section. You must amend your application if any changes occur with respect to any information included in your application.

(a) You must amend your application before you take either of the following actions:

(1) Add an engine (that is, an additional engine configuration) to an engine family. In this case, the engine added must be consistent with other engines in the engine family with respect to the criteria listed in § 1048.230.

(2) Change an engine already included in an engine family in a way that may affect emissions, or change any of the components you described in your application for certification. This includes production and design changes that may affect emissions any time during the engine's lifetime.

(b) To amend your application for certification, send the Designated Compliance Officer the following information:

(1) Describe in detail the addition or change in the engine model or configuration you intend to make.

(2) Include engineering evaluations or data showing that the amended engine family complies with all applicable requirements. You may do this by showing that the original emission-data engine is still appropriate with respect to showing compliance of the amended family with all applicable requirements.

(3) If the original emission-data engine for the engine family is not appropriate to show compliance for the new or modified nonroad engine, include

new test data showing that the new or modified nonroad engine meets the requirements of this part.

(c) We may ask for more test data or engineering evaluations. You must give us these within 30 days after we request them.

(d) For engine families already covered by a certificate of conformity, we will determine whether the existing certificate of conformity covers your new or modified nonroad engine. You may ask for a hearing if we deny your request (see § 1048.820).

(e) For engine families already covered by a certificate of conformity, you may start producing the new or modified nonroad engine anytime after you send us your amended application, before we make a decision under paragraph (d) of this section. However, if we determine that the affected engines do not meet applicable requirements, we will notify you to cease production of the engines and may require you to recall the engines at no expense to the owner. Choosing to produce engines under this paragraph (e) is deemed to be consent to recall all engines that we determine do not meet applicable emission standards or other requirements and to remedy the nonconformity at no expense to the owner. If you do not provide information required under paragraph (c) of this section within 30 days, you must stop producing the new or modified nonroad engines.

[70 FR 40472, July 13, 2005]

§ 1048.230 How do I select engine families?

(a) Divide your product line into families of engines that are expected to have similar emission characteristics throughout the useful life. Your engine family is limited to a single model year.

(b) Group engines in the same engine family if they are the same in all of the following aspects:

(1) The combustion cycle.

(2) The cooling system (water-cooled vs. air-cooled).

(3) Configuration of the fuel system (for example, fuel injection vs. carburetion).

(4) Method of air aspiration.

(5) The number, location, volume, and composition of catalytic converters.

(6) The number, arrangement, and approximate bore diameter of cylinders.

(7) Evaporative emission controls.

(c) You may subdivide a group of engines that is identical under paragraph (b) of this section into different engine families if you show the expected emission characteristics are different during the useful life.

(d) You may group engines that are not identical with respect to the things listed in paragraph (b) of this section in the same engine family if you show that their emission characteristics during the useful life will be similar.

(e) You may create separate families for exhaust emissions and evaporative emissions. If we do this, list both families on the emission control information label.

(f) Where necessary, you may divide an engine family into sub-families to meet different emission standards, as specified in § 1048.101(a)(2). For issues related to compliance and prohibited actions, we will generally apply decisions to the whole engine family. For engine labels and other administrative provisions, we may approve your request for separate treatment of sub-families.

[70 FR 40473, July 13, 2005]

§ 1048.235 What emission testing must I perform for my application for a certificate of conformity?

This section describes the emission testing you must perform to show compliance with the emission standards in §§ 1048.101(a) and (b) and 1048.105 during certification. See § 1048.205(q) regarding emission testing related to the field-testing standards. See § 1048.240 and 40 CFR part 1065, subpart E, regarding service accumulation before emission testing.

(a) Test your emission-data engines using the procedures and equipment specified in subpart F of this part. For any testing related to evaporative emissions, use good engineering judgment to include a complete fuel system with the engine.

(b) Select emission-data engines according to the following criteria:

(1) *Exhaust testing.* For each fuel type from each engine family, select an emission-data engine with a configuration that is most likely to exceed the exhaust emission standards, using good engineering judgment. Consider the emission levels of all exhaust constituents over the full useful life of the engine when operated in a piece of equipment.

(2) *Evaporative testing.* For each engine family that includes a volatile liquid fuel, select a test fuel system with a configuration that is most likely to exceed the evaporative emission standards, using good engineering judgment.

(c) We may measure emissions from any of your test engines or other engines from the engine family, as follows:

(1) We may decide to do the testing at your plant or any other facility. If we do this, you must deliver the test engine to a test facility we designate. The test engine you provide must include appropriate manifolds, aftertreatment devices, electronic control units, and other emission-related components not normally attached directly to the engine block. If we do the testing at your plant, you must schedule it as soon as possible and make available the instruments, personnel, and equipment we need.

(2) If we measure emissions on one of your test engines, the results of that testing become the official emission results for the engine. Unless we later invalidate these data, we may decide not to consider your data in determining if your engine family meets applicable requirements.

(3) Before we test one of your engines, we may set its adjustable parameters to any point within the physically adjustable ranges (see §1048.115(e)).

(4) Before we test one of your engines, we may calibrate it within normal production tolerances for anything we do not consider an adjustable parameter.

(d) You may ask to use emission data from a previous model year instead of doing new tests, but only if all the following are true:

(1) The engine family from the previous model year differs from the current engine family only with respect to model year.

(2) The emission-data engine from the previous model year remains the appropriate emission-data engine under paragraph (b) of this section.

(3) The data show that the emission-data engine would meet all the requirements that apply to the engine family covered by the application for certification.

(e) We may require you to test a second engine of the same or different configuration in addition to the engine tested under paragraph (b) of this section.

(f) If you use an alternate test procedure under 40 CFR 1065.10 and later testing shows that such testing does not produce results that are equivalent to the procedures specified in subpart F of this part, we may reject data you generated using the alternate procedure.

[70 FR 40473, July 13, 2005]

§1048.240 How do I demonstrate that my engine family complies with exhaust emission standards?

(a) For purposes of certification, your engine family is considered in compliance with the applicable numerical emission standards in §1048.101(a) and (b) if all emission-data engines representing that family have test results showing deteriorated emission levels at or below these standards.

(b) Your engine family is deemed not to comply if any emission-data engine representing that family has test results showing a deteriorated emission level above an applicable emission standard from §1048.101 for any pollutant.

(c) To compare emission levels from the emission-data engine with the applicable emission standards, apply deterioration factors to the measured emission levels for each pollutant. Specify the deterioration factors based on emission measurements using four significant figures, consistent with good engineering judgment. For example, your deterioration factors must take into account any available data from in-use testing with similar engines (see subpart E of this part). Small-volume engine manufacturers may use assigned deterioration factors

that we establish. Apply deterioration factors as follows:

(1) *Multiplicative deterioration factor.* For engines that use aftertreatment technology, such as catalytic converters, use a multiplicative deterioration factor for exhaust emissions. A multiplicative deterioration factor is the ratio of exhaust emissions at the end of useful life to exhaust emissions at the low-hour test point. Adjust the official emission results for each tested engine at the selected test point by multiplying the measured emissions by the deterioration factor. If the factor is less than one, use one.

(2) *Additive deterioration factor.* For engines that do not use aftertreatment technology, use an additive deterioration factor for exhaust emissions. An additive deterioration factor is the difference between exhaust emissions at the end of useful life and exhaust emissions at the low-hour test point. Adjust the official emission results for each tested engine at the selected test point by adding the factor to the measured emissions. If the factor is less than zero, use zero.

(d) Collect emission data using measurements to one more decimal place than the applicable standard. Apply the deterioration factor to the official emission result, as described in paragraph (c) of this section, then round the adjusted figure to the same number of decimal places as the emission standard. Compare the rounded emission levels to the emission standard for each emission-data engine. In the case of HC + NO_X standards, apply the deterioration factor to each pollutant and then add the results before rounding.

[70 FR 40474, July 13, 2005]

§ 1048.245 How do I demonstrate that my engine family complies with evaporative emission standards?

(a) For certification, your engine family is considered in compliance with the evaporative emission standards in subpart B of this part if you do either of the following:

(1) You have test results showing that evaporative emissions in the family are at or below the standards throughout the useful life.

(2) Where applicable, you comply with the design specifications in paragraph (e) of this section.

(b) Your engine family does not comply if any fuel system representing that family has test results showing emission levels above the standards.

(c) Use good engineering judgment to develop a test plan to establish deterioration factors to show how much emissions increase at the end of useful life.

(d) If you adjust the emission levels for deterioration, round them to the same number of decimal places as the emission standard. Compare the rounded emission levels to the emission standard for each test fuel system.

(e) You may demonstrate that your engine family complies with the evaporative emission standards by demonstrating that you use the following control technologies:

(1) For certification to the standards specified in § 1048.105(a)(1), with the following technologies:

(i) Use a tethered or self-closing gas cap on a fuel tank that stays sealed up to a positive pressure of 24.5 kPa (3.5 psig) or a vacuum pressure of 0.7 kPa (0.1 psig).

(ii) [Reserved]

(2) For certification to the standards specified in § 1048.105(a)(3), demonstrating that you use design features to prevent fuel boiling under all normal operation. You may do this using fuel temperature data measured during normal operation.

(3) We may establish additional options for design-based certification where we find that new test data demonstrate that a technology will ensure compliance with the emission standards in this section.

[67 FR 68347, Nov. 8, 2002, as amended at 70 FR 40474, July 13, 2005]

§ 1048.250 What records must I keep and make available to EPA?

(a) Organize and maintain the following records:

(1) A copy of all applications and any summary information you send us.

(2) Any of the information we specify in § 1048.205 that you were not required to include in your application.

(3) A detailed history of each emission-data engine. For each engine, describe all of the following:

(i) The emission-data engine's construction, including its origin and buildup, steps you took to ensure that it represents production engines, any components you built specially for it, and all the components you include in your application for certification.

(ii) How you accumulated engine operating hours (service accumulation), including the dates and the number of hours accumulated.

(iii) All maintenance, including modifications, parts changes, and other service, and the dates and reasons for the maintenance.

(iv) All your emission tests, including documentation on routine and standard tests, as specified in part 40 CFR part 1065, and the date and purpose of each test.

(v) All tests to diagnose engine or emission-control performance, giving the date and time of each and the reasons for the test.

(vi) Any other significant events.

(4) Production figures for each engine family divided by assembly plant.

(5) Keep a list of engine identification numbers for all the engines you produce under each certificate of conformity.

(b) Keep data from routine emission tests (such as test cell temperatures and relative humidity readings) for one year after we issue the associated certificate of conformity. Keep all other information specified in paragraph (a) of this section for eight years after we issue your certificate.

(c) Store these records in any format and on any media, as long as you can promptly send us organized, written records in English if we ask for them. You must keep these records readily available. We may review them at any time.

(d) Send us copies of any engine maintenance instructions or explanations if we ask for them.

[67 FR 68347, Nov. 8, 2002, as amended at 70 FR 40474, July 13, 2005]

§ 1048.255 When may EPA deny, revoke, or void my certificate of conformity?

(a) If we determine your application is complete and shows that the engine family meets all the requirements of this part and the Act, we will issue a certificate of conformity for your engine family for that model year. We may make the approval subject to additional conditions.

(b) We may deny your application for certification if we determine that your engine family fails to comply with emission standards or other requirements of this part or the Act. Our decision may be based on a review of all information available to us. If we deny your application, we will explain why in writing.

(c) In addition, we may deny your application or suspend or revoke your certificate if you do any of the following:

(1) Refuse to comply with any testing or reporting requirements.

(2) Submit false or incomplete information (paragraph (e) of this section applies if this is fraudulent).

(3) Render inaccurate any test data.

(4) Deny us from completing authorized activities despite our presenting a warrant or court order (see 40 CFR 1068.20). This includes a failure to provide reasonable assistance.

(5) Produce engines for importation into the United States at a location where local law prohibits us from carrying out authorized activities.

(6) Fail to supply requested information or amend your application to include all engines being produced.

(7) Take any action that otherwise circumvents the intent of the Act or this part.

(d) We may void your certificate if you do not keep the records we require or do not give us information when we ask for it.

(e) We may void your certificate if we find that you intentionally submitted false or incomplete information.

(f) If we deny your application or suspend, revoke, or void your certificate, you may ask for a hearing (see § 1048.820).

[70 FR 40474, July 13, 2005]

Subpart D—Testing Production-line Engines

§ 1048.301 When must I test my production-line engines?

(a) If you produce engines that are subject to the requirements of this

part, you must test them as described in this subpart.

(b) We may suspend or revoke your certificate of conformity for certain engine families if your production-line engines do not meet the requirements of this part or you do not fulfill your obligations under this subpart (see §§ 1048.325 and 1048.340).

(c) Other requirements apply to engines that you produce. Other regulatory provisions authorize us to suspend, revoke, or void your certificate of conformity, or order recalls for engines families without regard to whether they have passed these production-line testing requirements. The requirements of this part do not affect our ability to do selective enforcement audits, as described in part 1068 of this chapter. Individual engines in families that pass these production-line testing requirements must also conform to all applicable regulations of this part and part 1068 of this chapter.

(d) You may ask to use an alternate program for testing production-line engines. In your request, you must show us that the alternate program gives equal assurance that your production-line engines meet the requirements of this part. If we approve your alternate program, we may waive some or all of this subpart's requirements.

(e) If you certify an engine family with carryover emission data, as described in § 1048.235(c), and these equivalent engine families consistently pass the production-line testing requirements over the preceding two-year period, you may ask for a reduced testing rate for further production-line testing for that family. The minimum testing rate is one engine per engine family. If we reduce your testing rate, we may limit our approval to any number of model years. In determining whether to approve your request, we may consider the number of engines that have failed the emission tests.

(f) We may ask you to make a reasonable number of production-line engines available for a reasonable time so we can test or inspect them for compliance with the requirements of this part. See 40 CFR 1068.27.

[67 FR 68347, Nov. 8, 2002, as amended at 70 FR 40475, July 13, 2005]

§ 1048.305 How must I prepare and test my production-line engines?

(a) *Test procedures.* Test your production-line engines using either the steady-state or transient testing procedures in subpart F of this part to show you meet the emission standards in § 1048.101(a) or (b), respectively. We may require you to test engines using the transient testing procedures to show you meet the emission standards in § 1048.101(a).

(b) *Modifying a test engine.* Once an engine is selected for testing (see § 1048.310), you may adjust, repair, prepare, or modify it or check its emissions only if one of the following is true:

(1) You document the need for doing so in your procedures for assembling and inspecting all your production engines and make the action routine for all the engines in the engine family.

(2) This subpart otherwise specifically allows your action.

(3) We approve your action in advance.

(c) *Engine malfunction.* If an engine malfunction prevents further emission testing, ask us to approve your decision to either repair the engine or delete it from the test sequence.

(d) *Setting adjustable parameters.* Before any test, we may adjust or require you to adjust any adjustable parameter to any setting within its physically adjustable range.

(1) We may adjust or require you to adjust idle speed outside the physically adjustable range as needed only until the engine has stabilized emission levels (see paragraph (e) of this section). We may ask you for information needed to establish an alternate minimum idle speed.

(2) We may make or specify adjustments within the physically adjustable range by considering their effect on emission levels, as well as how likely it is someone will make such an adjustment with in-use engines.

(e) *Stabilizing emission levels.* Before you test production-line engines, you may operate the engine to stabilize the emission levels. Using good engineering judgment, operate your engines in

a way that represents the way production engines will be used. You may operate each engine for no more than the greater of two periods:

(1) 50 hours.

(2) The number of hours you operated your emission-data engine for certifying the engine family (see 40 CFR part 1065, subpart E).

(f) *Damage during shipment.* If shipping an engine to a remote facility for production-line testing makes necessary an adjustment or repair, you must wait until after the initial emission test to do this work. We may waive this requirement if the test would be impossible or unsafe, or if it would permanently damage the engine. Report to us, in your written report under § 1048.345, all adjustments or repairs you make on test engines before each test.

(g) *Retesting after invalid tests.* You may retest an engine if you determine an emission test is invalid under subpart F of this part. Explain in your written report reasons for invalidating any test and the emission results from all tests. If you retest an engine and, within ten days after testing, ask to substitute results of the new tests for the original ones, we will answer within ten days after we receive your information.

[67 FR 68347, Nov. 8, 2002, as amended at 70 FR 40475, July 13, 2005]

§ 1048.310 How must I select engines for production-line testing?

(a) Use test results from two engines for each engine family to calculate the required sample size for the model year. Update this calculation with each test.

(b) Early in each calendar quarter, randomly select and test two engines from the end of the assembly line for each engine family.

(c) Calculate the required sample size for each engine family. Separately calculate this figure for $HC+NO_X$ and for CO. The required sample size is the greater of these two calculated values. Use the following equation:

$$N = \left[\frac{(t_{95} \times \sigma)}{(x - STD)}\right]^2 + 1$$

Where:

N = Required sample size for the model year.

t_{95} = 95% confidence coefficient, which depends on the number of tests completed, n, as specified in the table in paragraph (c)(1) of this section. It defines 95% confidence intervals for a one-tail distribution.

x = Mean of emission test results of the sample.

STD = Emission standard.

σ = Test sample standard deviation (see paragraph (c)(2) of this section).

n = The number of tests completed in an engine family.

(1) Determine the 95% confidence coefficient, t_{95}, from the following table:

n	t_{95}	n	t_{95}	n	t_{95}
2	6.31	12	1.80	22	1.72
3	2.92	13	1.78	23	1.72
4	2.35	14	1.77	24	1.71
5	2.13	15	1.76	25	1.71
6	2.02	16	1.75	26	1.71
7	1.94	17	1.75	27	1.71
8	1.90	18	1.74	28	1.70
9	1.86	19	1.73	29	1.70
10	1.83	20	1.73	30+	1.70
11	1.81	21	1.72		

(2) Calculate the standard deviation, σ, for the test sample using the following formula:

$$\sigma = \sqrt{\frac{\sum (X_i - x)^2}{n - 1}}$$

Where:

X_i = Emission test result for an individual engine.

(d) Use final deteriorated test results to calculate the variables in the equations in paragraph (c) of this section (see § 1048.315(a)).

(e) After each new test, recalculate the required sample size using the updated mean values, standard deviations, and the appropriate 95-percent confidence coefficient.

(f) Distribute the remaining engine tests evenly throughout the rest of the year. You may need to adjust your schedule for selecting engines if the required sample size changes. Continue to randomly select engines from each engine family; this may involve testing engines that operate on different fuels.

(g) Continue testing any engine family for which the sample mean, x, is greater than the emission standard. This applies if the sample mean for either $HC+NO_X$ or for CO is greater than

the emission standard. Continue testing until one of the following things happens:

(1) The number of tests completed in an engine family, n, is greater than the required sample size, N, and the sample mean, x, is less than or equal to the emission standard. For example, if N = 3.1 after the third test, the sample-size calculation does not allow you to stop testing.

(2) The engine family does not comply according to § 1048.315.

(3) You test 30 engines from the engine family.

(4) You test one percent of your projected annual U.S.-directed production volume for the engine family, rounded to the nearest whole number. If your projected production is between 150 and 750 engines, test engines as specified in paragraph (b) of this section until you have tested one percent of your projected annual U.S.-directed production volume. For example, if projected volume is 475 engines, test two engines in each of the first two quarters and one engine in the third quarter to fulfill your testing requirements under this section for that engine family. If your projected production volume is less than 150, you must test at least two engines.

(5) You choose to declare that the engine family does not comply with the requirements of this subpart.

(h) If the sample-size calculation allows you to stop testing for a pollutant, you must continue measuring emission levels of that pollutant for any additional tests required under this section. However, you need not continue making the calculations specified in this section for that pollutant. This paragraph (h) does not affect the requirements in § 1048.320.

(i) You may elect to test more randomly chosen engines than we require under this section. Include these engines in the sample-size calculations.

[67 FR 68347, Nov. 8, 2002, as amended at 70 FR 40475, July 13, 2005]

§ 1048.315 How do I know when my engine family fails the production-line testing requirements?

This section describes the pass/fail criteria for the production-line testing requirements. We apply these criteria on an engine-family basis. See § 1048.320 for the requirements that apply to individual engines that fail a production-line test.

(a) Calculate your test results. Round them to the number of decimal places in the emission standard expressed to one more decimal place.

(1) *Initial and final test results.* Calculate and round the test results for each engine. If you do several tests on an engine, calculate the initial test results, then add them together and divide by the number of tests and round for the final test results on that engine.

(2) *Final deteriorated test results.* Apply the deterioration factor for the engine family to the final test results (see § 1048.240(c)).

(b) Construct the following CumSum Equation for each engine family (for $HC+NO_X$ and for CO emissions):

$$C_i = C_{i-1} + X_i - (STD + 0.25 \times \sigma)$$

Where:

C_i = The current CumSum statistic.

C_{i-1} = The previous CumSum statistic. For the first test, CumSum statistic is 0 (*i.e.* $C_1 = 0$).

X_i = The current emission test result for an individual engine.

STD = Emission standard.

(c) Use final deteriorated test results to calculate the variables in the equation in paragraph (b) of this section (see § 1048.315(a)).

(d) After each new test, recalculate the CumSum statistic.

(e) If you test more than the required number of engines, include the results from these additional tests in the CumSum Equation.

(f) After each test, compare the current CumSum statistic, C_i, to the recalculated Action Limit, H, defined as $H = 5.0 \times \sigma$.

(g) If the CumSum statistic exceeds the Action Limit in two consecutive tests, the engine family fails the production-line testing requirements of this subpart. Tell us within ten working days if this happens.

(h) If you amend the application for certification for an engine family (see § 1048.225), do not change any previous

calculations of sample size or CumSum statistics for the model year.

[67 FR 68347, Nov. 8, 2002, as amended at 70 FR 40475, July 13, 2005]

§ 1048.320 What happens if one of my production-line engines fails to meet emission standards?

If you have a production-line engine with final deteriorated test results exceeding one or more emission standards (see § 1048.315(a)), the certificate of conformity is automatically suspended for that failing engine. You must take the following actions before your certificate of conformity can cover that engine:

(a) Correct the problem and retest the engine to show it complies with all emission standards.

(b) Include in your written report a description of the test results and the remedy for each engine (see § 1048.345).

§ 1048.325 What happens if an engine family fails the production-line requirements?

(a) We may suspend your certificate of conformity for an engine family if it fails under § 1048.315. The suspension may apply to all facilities producing engines from an engine family, even if you find noncompliant engines only at one facility.

(b) We will tell you in writing if we suspend your certificate in whole or in part. We will not suspend a certificate until at least 15 days after the engine family fails. The suspension is effective when you receive our notice.

(c) Up to 15 days after we suspend the certificate for an engine family, you may ask for a hearing (see § 1048.820). If we agree before a hearing that we used erroneous information in deciding to suspend the certificate, we will reinstate the certificate.

(d) Section 1048.335 specifies steps you must take to remedy the cause of the engine family's production-line failure. All the engines you have produced since the end of the last test period are presumed noncompliant and should be addressed in your proposed remedy. We may require you to apply the remedy to engines produced earlier if we determine that the cause of the failure is likely to have affected the earlier engines.

[67 FR 68347, Nov. 8, 2002, as amended at 70 FR 40475, July 13, 2005]

§ 1048.330 May I sell engines from an engine family with a suspended certificate of conformity?

You may sell engines that you produce after we suspend the engine family's certificate of conformity under § 1048.315 only if one of the following occurs:

(a) You test each engine you produce and show it complies with emission standards that apply.

(b) We conditionally reinstate the certificate for the engine family. We may do so if you agree to recall all the affected engines and remedy any noncompliance at no expense to the owner if later testing shows that the engine family still does not comply.

§ 1048.335 How do I ask EPA to reinstate my suspended certificate?

(a) Send us a written report asking us to reinstate your suspended certificate. In your report, identify the reason for noncompliance, propose a remedy for the engine family, and commit to a date for carrying it out. In your proposed remedy include any quality control measures you propose to keep the problem from happening again.

(b) Give us data from production-line testing that shows the remedied engine family complies with all the emission standards that apply.

§ 1048.340 When may EPA revoke my certificate under this subpart and how may I sell these engines again?

(a) We may revoke your certificate for an engine family in the following cases:

(1) You do not meet the reporting requirements.

(2) Your engine family fails to comply with the requirements of this subpart and your proposed remedy to address a suspended certificate under § 1048.325 is inadequate to solve the problem or requires you to change the engine's design or emission-control system.

(b) To sell engines from an engine family with a revoked certificate of

conformity, you must modify the engine family and then show it complies with the requirements of this part.

(1) If we determine your proposed design change may not control emissions for the engine's full useful life, we will tell you within five working days after receiving your report. In this case we will decide whether production-line testing will be enough for us to evaluate the change or whether you need to do more testing.

(2) Unless we require more testing, you may show compliance by testing production-line engines as described in this subpart.

(3) We will issue a new or updated certificate of conformity when you have met these requirements.

§ 1048.345 What production-line testing records must I send to EPA?

Do all the following things unless we ask you to send us less information:

(a) Within 30 calendar days of the end of each calendar quarter, send us a report with the following information:

(1) Describe any facility used to test production-line engines and state its location.

(2) State the total U.S.-directed production volume and number of tests for each engine family.

(3) Describe how you randomly selected engines.

(4) Describe your test engines, including the engine family's identification and the engine's model year, build date, model number, identification number, and number of hours of operation before testing for each test engine.

(5) Identify where you accumulated hours of operation on the engines and describe the procedure and schedule you used.

(6) Provide the test number; the date, time and duration of testing; test procedure; initial test results before and after rounding; final test results; and final deteriorated test results for all tests. Provide the emission results for all measured pollutants. Include information for both valid and invalid tests and the reason for any invalidation.

(7) Describe completely and justify any nonroutine adjustment, modification, repair, preparation, maintenance, or test for the test engine if you did not report it separately under this subpart. Include the results of any emission measurements, regardless of the procedure or type of equipment.

(8) Provide the CumSum analysis required in § 1048.315 for each engine family.

(9) Report on each failed engine as described in § 1048.320.

(10) State the date the calendar quarter ended for each engine family.

(b) We may ask you to add information to your written report, so we can determine whether your new nonroad engines conform with the requirements of this subpart.

(c) An authorized representative of your company must sign the following statement:

> We submit this report under Sections 208 and 213 of the Clean Air Act. Our production-line testing conformed completely with the requirements of 40 CFR part 1048. We have not changed production processes or quality-control procedures for the engine family in a way that might affect the emission control from production engines. All the information in this report is true and accurate, to the best of my knowledge. I know of the penalties for violating the Clean Air Act and the regulations. (Authorized Company Representative)

(d) Send electronic reports of production-line testing to the Designated Compliance Officer using an approved information format. If you want to use a different format, send us a written request with justification for a waiver.

(e) We will send copies of your reports to anyone from the public who asks for them. See § 1048.815 for information on how we treat information you consider confidential.

[67 FR 68347, Nov. 8, 2002, as amended at 70 FR 40476, July 13, 2005]

§ 1048.350 What records must I keep?

(a) Organize and maintain your records as described in this section. We may review your records at any time.

(b) Keep paper records of your production-line testing for one full year after you complete all the testing required for an engine family in a model year. You may use any additional storage formats or media if you like.

(c) Keep a copy of the written reports described in § 1048.345.

(d) Keep the following additional records:

(1) A description of all test equipment for each test cell that you can use to test production-line engines.

(2) The names of supervisors involved in each test.

(3) The name of anyone who authorizes adjusting, repairing, preparing, or modifying a test engine and the names of all supervisors who oversee this work.

(4) If you shipped the engine for testing, the date you shipped it, the associated storage or port facility, and the date the engine arrived at the testing facility.

(5) Any records related to your production-line tests that are not in the written report.

(6) A brief description of any significant events during testing not otherwise described in the written report or in this section.

(7) Any information specified in § 1048.345 that you do not include in your written reports.

(e) If we ask, you must give us projected or actual production figures for an engine family. We may ask you to divide your production figures by maximum brake power, displacement, fuel type, or assembly plant (if you produce engines at more than one plant).

(f) Keep a list of engine identification numbers for all the engines you produce under each certificate of conformity. Give us this list within 30 days if we ask for it.

(g) We may ask you to keep or send other information necessary to implement this subpart.

[67 FR 68347, Nov. 8, 2002, as amended at 70 FR 40476, July 13, 2005]

Subpart E—Testing In-use Engines

§ 1048.401 What testing requirements apply to my engines that have gone into service?

(a) If you produce engines that are subject to the requirements of this part, you must test them as described in this subpart. This generally involves testing engines in the field or removing them for measurement in a laboratory.

(b) We may approve an alternate plan for showing that in-use engines comply with the requirements of this part if one of the following is true:

(1) You produce 200 or fewer engines per year in the selected engine family.

(2) Removing the engine from most of the applications for that engine family causes significant, irreparable damage to the equipment.

(3) You identify a unique aspect of your engine applications that keeps you from doing the required in-use testing.

(c) We may void your certificate of conformity for an engine family if you do not meet your obligations under this part.

(d) Independent of your responsibility to test in-use engines, we may choose at any time to do our own testing of your in-use engines.

(e) If in-use testing shows that engines fail to meet emission standards or other requirements of this part, we may pursue a recall or other remedy as allowed by the Act (see § 1048.415).

§ 1048.405 How does this program work?

(a) You must test in-use engines, for exhaust emissions, from the families we select. We may select up to 25 percent of your engine families in any model year—or one engine family if you have three or fewer families. We will select engine families for testing before the end of the model year. When we select an engine family for testing, we may specify that you preferentially test engines based on fuel type or equipment type. In addition, we may identify specific modes of operation or sampling times. You may choose to test additional engine families that we do not select.

(b) Send us an in-use testing plan within 12 calendar months after we direct you to test a particular engine family. Complete the testing within 24 calendar months after we approve your plan.

(c) You may need to test engines from more than one model year at a given time.

§ 1048.410 How must I select, prepare, and test my in-use engines?

(a) You may make arrangements to select representative test engines from

your own fleet or from other independent sources.

(b) For the selected engine families, select engines that you or your customers have—

(1) Operated for at least 50 percent of the engine family's useful life (see § 1048.101(d));

(2) Not maintained or used in an abnormal way; and

(3) Documented in terms of total hours of operation, maintenance, operating conditions, and storage.

(c) Use the following methods to determine the number of engines you must test in each engine family:

(1) Test at least two engines if you produce 2,000 or fewer engines in the model year from all engine families, or if you produce 500 or fewer engines from the selected engine family. Otherwise, test at least four engines.

(2) If you successfully complete an in-use test program on an engine family and later certify an equivalent engine family with carryover emission data, as described in § 1048.235(c), then test at least one engine instead of the testing rates in paragraph (c)(1) of this section.

(3) If you test the minimum required number of engines and all comply fully with emission standards, you may stop testing.

(4) For each engine that fails any applicable standard, test two more. Regardless of measured emission levels, you do not have to test more than ten engines in an engine family. You may do more tests than we require.

(5) You may concede that the engine family does not comply before testing a total of ten engines.

(d) You may do minimal maintenance to set components of a test engine to specifications for anything we do not consider an adjustable parameter (see § 1048.205(p)). Limit maintenance to what is in the owner's instructions for engines with that amount of service and age. Document all maintenance and adjustments.

(e) Do at least one valid exhaust emission test for each test engine.

(f) For a test program on an engine family, choose one of the following methods to test your engines:

(1) Remove the selected engines for testing in a laboratory. Use the applicable steady-state and transient procedures in subpart F of this part to show compliance with the duty-cycle standards in § 1048.101(a) and (b). We may direct you to measure emissions on the dynamometer using the supplemental test procedures in § 1048.515 to show compliance with the field-testing standards in § 1048.101(c).

(2) Test the selected engines while they remain installed in the equipment. Use the field testing procedures in subpart F of this part. Measure emissions during normal operation of the equipment to show compliance with the field-testing standards in § 1048.101(c). We may direct you to include specific areas of normal operation.

(g) You may ask us to waive parts of the prescribed test procedures if they are not necessary to determine in-use compliance.

(h) Calculate the average emission levels for an engine family from the results for the set of tested engines. Round them to the number of decimal places in the emission standards expressed to one more decimal place.

§ 1048.415 What happens if in-use engines do not meet requirements?

(a) Determine the reason each in-use engine exceeds the emission standards.

(b) If the average emission levels calculated in § 1048.410(h) exceed any of the emission standards that apply, notify us within fifteen days of completing testing on this family. Otherwise follow the reporting instructions in § 1048.420.

(c) We will consider failure rates, average emission levels, and any defects—among other things—to decide on taking remedial action under this subpart (see 40 CFR 1068.505). We may consider the results from any voluntary additional testing you conduct. We may also consider information related to testing from other engine families showing that you designed them to exceed the minimum requirements for controlling emissions. We may order a recall before or after you complete testing of an engine family if we determine a substantial number of engines do not conform to section 213 of the Act or to this part.

(d) If in-use testing reveals a design or manufacturing defect that prevents

engines from meeting the requirements of this part, you must correct the defect as soon as possible for any future production for engines in every family affected by the defect.

(e) You may voluntarily recall an engine family for emission failures, as described in 40 CFR 1068.535, unless we have ordered a recall for that family under 40 CFR 1068.505.

(f) You have the right to a hearing before we order you to recall your engines or implement an alternative remedy (see § 1048.820).

§ 1048.420 What in-use testing information must I report to EPA?

(a) In a report to us within three months after you finish testing an engine family, do all the following:

(1) Identify the engine family, model, serial number, and date of manufacture.

(2) For each engine inspected or considered for testing, identify whether the diagnostic system was functioning.

(3) Describe the specific reasons for disqualifying any engines for not being properly maintained or used.

(4) For each engine selected for testing, include the following information:

(i) Estimate the hours each engine was used before testing.

(ii) Describe all maintenance, adjustments, modifications, and repairs to each test engine.

(5) State the date and time of each test attempt.

(6) Include the results of all emission testing, including incomplete or invalidated tests, if any.

(b) Send electronic reports of in-use testing to the Designated Compliance Officer using an approved information format. If you want to use a different format, send us a written request with justification for a waiver.

(c) We will send copies of your reports to anyone from the public who asks for them. See § 1048.815 for information on how we treat information you consider confidential.

(d) We may ask for more information.

[67 FR 68347, Nov. 8, 2002, as amended at 70 FR 40476, July 13, 2005]

§ 1048.425 What records must I keep?

(a) Organize and maintain your records as described in this section. We may review your records at any time.

(b) Keep paper records of your in-use testing for one full year after you complete all the testing required for an engine family in a model year. You may use any additional storage formats or media if you like.

(c) Keep a copy of the written reports described in § 1048.420.

(d) Keep any additional records related to the procurement process.

[67 FR 68347, Nov. 8, 2002, as amended at 70 FR 40476, July 13, 2005]

Subpart F—Test Procedures

§ 1048.501 How do I run a valid emission test?

(a) Use the equipment and procedures for spark-ignition engines in 40 CFR part 1065 to determine whether engines meet the duty-cycle emission standards in § 1048.101(a) and (b). Measure the emissions of all the pollutants we regulate in § 1048.101 using the sampling procedures specified in 40 CFR part 1065. Use the applicable duty cycles specified in §§ 1048.505 and 1048.510.

(b) Section 1048.515 describes the supplemental procedures for evaluating whether engines meet the field-testing emission standards in § 1048.101(c).

(c) Use the fuels specified in 40 CFR part 1065, subpart C, to perform valid tests for all the testing we require in this part, except as noted in § 1048.515. For service accumulation, use the test fuel or any commercially available fuel that is representative of the fuel that in-use engines will use.

(d) In place of the provisions of 40 CFR 1065.405, you may consider emission levels stable without measurement after 50 hours of engine operation.

(e) To test engines for evaporative emissions, use the equipment and procedures specified for testing diurnal emissions in 40 CFR 86.107–96 and 86.133–96 with fuel meeting the specifications in 40 CFR part 1065, subpart C. Measure emissions from a test engine with a complete fuel system. Reported emission levels must be based on the

highest emissions from three successive 24-hour periods of cycling temperatures. Note that you may omit testing for evaporative emissions during certification if you certify by design, as specified in § 1048.245.

(f) You may use special or alternate procedures to the extent we allow them under 40 CFR 1065.10.

(g) This subpart is addressed to you as a manufacturer, but it applies equally to anyone who does testing for you, and to us when we perform testing to determine if your engines meet emission standards.

(h) Map all engines (including constant-speed engines) using the procedures specified in 40 CFR part 1065 for variable-speed engines. For constant-speed engines, continue the mapping procedure until you reach the high-idle speed (the highest speed at which the engine produces zero torque).

[70 FR 40476, July 13, 2005]

§ 1048.505 How do I test engines using steady-state duty cycles, including ramped-modal testing?

This section describes how to test engines under steady-state conditions. In some cases, we allow you to choose the appropriate steady-state duty cycle for an engine. In these cases, you must use the duty cycle you select in your application for certification for all testing you perform for that engine family. If we test your engines to confirm that they meet emission standards, we will use the duty cycles you select for your own testing. We may also perform other testing as allowed by the Clean Air Act.

(a) You may perform steady-state testing with either discrete-mode or ramped-modal cycles, as follows:

(1) For discrete-mode testing, sample emissions separately for each mode, then calculate an average emission level for the whole cycle using the weighting factors specified for each mode. Calculate cycle statistics for the sequence of modes and compare with the specified values in 40 CFR 1065.514 to confirm that the test is valid. Operate the engine and sampling system as follows:

(i) *Engines with lean NO_X aftertreatment.* For lean-burn engines that depend on aftertreatment to meet the NO_X emission standard, operate the engine for 5–6 minutes, then sample emissions for 1–3 minutes in each mode.

(ii) *Engines without lean NO_X aftertreatment.* For other engines, operate the engine for at least 5 minutes, then sample emissions for at least 1 minute in each mode. Calculate cycle statistics for the sequence of modes and compare with the specified values in 40 CFR part 1065 to confirm that the test is valid.

(2) For ramped-modal testing, start sampling at the beginning of the first mode and continue sampling until the end of the last mode. Calculate emissions and cycle statistics the same as for transient testing.

(b) Measure emissions by testing the engine on a dynamometer with one or more of the following sets of duty cycles to determine whether it meets the steady-state emission standards in § 1048.101(b):

(1) For engines from an engine family that will be used only in variable-speed applications, use one of the following duty cycles:

(i) The following duty cycle applies for discrete-mode testing:

TABLE 1 OF § 1048.505

C2 Mode No.	Engine speed [1]	Observed torque [2]	Minimum time in mode (minutes)	Weighting factors
1	Maximum test speed	25	3.0	0.06
2	Intermediate test speed	100	3.0	0.02
3	Intermediate test speed	75	3.0	0.05
4	Intermediate test speed	50	3.0	0.32
5	Intermediate test speed	25	3.0	0.30

TABLE 1 OF § 1048.505—Continued

C2 Mode No.	Engine speed [1]	Observed torque [2]	Minimum time in mode (minutes)	Weighting factors
6	Intermediate test speed	10	3.0	0.10
7	Idle	0	3.0	0.15

[1] Speed terms are defined in 40 CFR part 1065.
[2] The percent torque is relative to the maximum torque at the given engine speed.

(ii) The following duty cycle applies for ramped-modal testing:

TABLE 2 OF § 1048.505

RMC mode	Time in mode (seconds)	Engine speed [1,2]	Torque (percent) [2,3]
1a Steady-state	119	Warm Idle	0
1b Transition	20	Linear Transition	Linear Transition.
2a Steady-state	29	Intermediate Speed	100
2b Transition	20	Intermediate Speed	Linear Transition.
3a Steady-state	150	Intermediate Speed	10
3b Transition	20	Intermediate Speed	Linear Transition.
4a Steady-state	80	Intermediate Speed	75
4b Transition	20	Intermediate Speed	Linear Transition.
5a Steady-state	513	Intermediate Speed	25
5b Transition	20	Intermediate Speed	Linear Transition.
6a Steady-state	549	Intermediate Speed	50
5b Transition	20	Linear Transition	Linear Transition.
6a Steady-state	96	Maximum test speed	25
6b Transition	20	Linear Transition	Linear Transition.
7 Steady-state	124	Warm Idle	0

[1] Speed terms are defined in 40 CFR part 1065.
[2] Advance from one mode to the next within a 20-second transition phase. During the transition phase, command a linear progression from the torque setting of the current mode to the torque setting of the next mode.
[3] The percent torque is relative to maximum torque at the commanded engine speed.

(2) For engines from an engine family that will be used only at a single, rated speed, use one of the following duty cycles:

(i) The following duty cycle applies for discrete-mode testing:

TABLE 3 OF § 1048.505

D2 mode No.	Engine speed	Torque [1]	Minimum time in mode (minutes)	Weighting factors
1	Maximum test	100	3.0	0.05
2	Maximum test	75	3.0	0.25
3	Maximum test	50	3.0	0.30
4	Maximum test	25	3.0	0.30
5	Maximum test	10	3.0	0.10

[1] The percent torque is relative to the maximum torque at maximum test speed.

(ii) The following duty cycle applies for ramped-modal testing:

TABLE 4 OF § 1048.505

RMC mode	Time in mode (seconds)	Engine speed	Torque (percent) [1,2]
1a Steady-state	53	Engine Governed	100
1b Transition	20	Engine Governed	Linear transition.

TABLE 4 OF § 1048.505—Continued

RMC mode	Time in mode (seconds)	Engine speed	Torque (percent) [1,2]
2a Steady-state	101	Engine Governed	10
2b Transition	20	Engine Governed	Linear transition.
3a Steady-state	277	Engine Governed	75
3b Transition	20	Engine Governed	Linear transition.
4a Steady-state	339	Engine Governed	25
4b Transition	20	Engine Governed	Linear transition.
5 Steady-state	350	Engine Governed	50

[1] The percent torque is relative to maximum test torque.
[2] Advance from one mode to the next within a 20-second transition phase. During the transition phase, command a linear progression from the torque setting of the current mode to the torque setting of the next mode.

(3) Use a duty cycle from both paragraphs (b)(1) and (b)(2) of this section if you will not restrict an engine family to constant-speed or variable-speed applications.

(4) Use a duty cycle specified in paragraph (b)(2) of this section for all severe-duty engines.

(5) For high-load engines, use one of the following duty cycles:

(i) The following duty cycle applies for discrete-mode testing:

TABLE 5 OF § 1048.505

D1 mode No.	Engine speed	Torque [1]	Minimum time in mode (minutes)	Weighting factors
1	Maximum test	100	3.0	0.50
2	Maximum test	75	3.0	0.50

[1] The percent torque is relative to the maximum torque at maximum test speed.

(ii) The following duty cycle applies for discrete-mode testing:

TABLE 6 OF § 1048.505

RMC modes	Time in mode (seconds)	Engine speed (percent)	Torque (percent) [1,2]
1a Steady-state	290	Engine Governed	100
1b Transition	20	Engine Governed	Linear Transition.
2 Steady-state	290	Engine Governed	75

[1] The percent torque is relative to maximum test torque.
[2] Advance from one mode to the next within a 20-second transition phase. During the transition phase, command a linear progression from the torque setting of the current mode to the torque setting of the next mode.

(c) If we test an engine to confirm that it meets the duty-cycle emission standards, we will use the steady-state duty cycles that apply for that engine family.

(d) During idle mode, operate the engine with the following parameters:

(1) Hold the speed within your specifications.

(2) Set the engine to operate at its minimum fueling rate.

(3) Keep engine torque under 5 percent of maximum test torque.

(e) For full-load operating modes, operate the engine at wide-open throttle.

(f) See 40 CFR part 1065 for detailed specifications of tolerances and calculations.

(g) For those cases where transient testing is not necessary, perform the steady-state test according to this section after an appropriate warm-up period, consistent with 40 CFR part 1065, subpart F.

[70 FR 40476, July 13, 2005]

§ 1048.510 Which duty cycles do I use for transient testing?

(a) Starting with the 2007 model year, measure emissions by testing the engine on a dynamometer with one of the following transient duty cycles to determine whether it meets the transient emission standards in § 1048.101(a):

(1) For constant-speed engines and severe-duty engines, use the transient duty-cycle described in Appendix I of this part.

(2) For all other engines, use the transient duty cycle described in Appendix II of this part.

(b) If we test an engine to confirm that it meets the duty-cycle emission standards, we will use the transient duty cycle that applies for that engine family.

(c) Warm up the test engine as follows:

(1) Operate the engine for the first 180 seconds of the appropriate duty cycle from Appendix I or Appendix II of this part, then allow it to idle without load for 30 seconds. At the end of the 30-second idling period, start measuring emissions as the engine operates over the prescribed duty cycle. For severe-duty engines, this engine warm-up procedure may include up to 15 minutes of operation over the appropriate duty cycle.

(2) If the engine was already operating before a test, use good engineering judgment to let the engine cool down enough so measured emissions during the next test will accurately represent those from an engine starting at room temperature. For example, if an engine starting at room temperature warms up enough in three minutes to start closed-loop operation and achieve full catalyst activity, then minimal engine cooling is necessary before starting the next test.

(3) You are not required to measure emissions while the engine is warming up. However, you must design your emission-control system to start working as soon as possible after engine starting. In your application for certification, describe how your engine meets this objective (see § 1048.205(b)).

[67 FR 68347, Nov. 8, 2002, as amended at 70 FR 40478, July 13, 2005]

§ 1048.515 What are the field-testing procedures?

(a) This section describes the procedures to determine whether your engines meet the field-testing emission standards in § 1048.101(c). These procedures may include any normal engine operation and ambient conditions that the engines may experience in use. Paragraph (b) of this section defines the limits of what we will consider normal engine operation and ambient conditions. Use the test procedures we specify in § 1048.501, except for the provisions we specify in this section. Measure emissions with one of the following procedures:

(1) Remove the selected engines for testing in a laboratory. You may use an engine dynamometer to simulate normal operation, as described in this section.

(2) Test the selected engines while they remain installed in the equipment. In 40 CFR part 1065, subpart J, we describe the equipment and sampling methods for testing engines in the field. Use fuel meeting the specifications of 40 CFR part 1065, subpart H, or a fuel typical of what you would expect the engine to use in service.

(b) An engine's emissions may not exceed the levels we specify in § 1048.101(c) for any continuous sampling period of at least 120 seconds under the following ranges of operation and operating conditions:

(1) Engine operation during the emission sampling period may include any normal operation, subject to the following restrictions:

(i) Average power must be over 5 percent of maximum brake power.

(ii) Continuous time at idle must not be greater than 120 seconds.

(iii) The sampling period may not begin until the engine has reached stable operating temperatures. For example, this would exclude engine operation after starting until the thermostat starts modulating coolant temperature.

(iv) The sampling period may not include engine starting.

(v) For engines that qualify for the alternate Tier 2 emission standards in § 1048.101(d), operation at 90 percent or more of maximum power must be less than 10 percent of the total sampling

time. You may request our approval for a different power threshold.

(2) Engine testing may occur under any normal conditions without correcting measured emission levels, subject to the following restrictions:

(i) Barometric pressure must be between 80.0 and 103.3 kPa (600 and 775 mm Hg).

(ii) Ambient air temperature must be between 13° and 35 °C.

[67 FR 68347, Nov. 8, 2002, as amended at 70 FR 40478, July 13, 2005]

Subpart G—Compliance Provisions

§ 1048.601 What compliance provisions apply to these engines?

Engine and equipment manufacturers, as well as owners, operators, and rebuilders of engines subject to the requirements of this part, and all other persons, must observe the provisions of this part, the requirements and prohibitions in 40 CFR part 1068, and the provisions of the Act.

[70 FR 40479, July 13, 2005]

§ 1048.605 What provisions apply to engines certified under the motor-vehicle program?

(a) *General provisions.* If you are an engine manufacturer, this section allows you to introduce new nonroad engines into commerce if they are already certified to the requirements that apply to engines under 40 CFR parts 85 and 86 for the appropriate model year. If you comply with all the provisions of this section, we consider the certificate issued under 40 CFR part 86 for each engine to also be a valid certificate of conformity under this part 1048 for its model year, without a separate application for certification under the requirements of this part 1048. See § 1048.610 for similar provisions that apply to engines certified to chassis-based standards for motor vehicles.

(b) *Equipment-manufacturer provisions.* If you are not an engine manufacturer, you may produce nonroad equipment using motor-vehicle engines under this section as long as you meet all the requirements and conditions specified in paragraph (d) of this section. If you modify the motor-vehicle engine in any of the ways described in paragraph (d)(2) of this section, we will consider you a manufacturer of a new nonroad engine. Such engine modifications prevent you from using the provisions of this section.

(c) *Liability.* Engines for which you meet the requirements of this section are exempt from all the requirements and prohibitions of this part, except for those specified in this section. Engines exempted under this section must meet all the applicable requirements from 40 CFR parts 85 and 86. This applies to engine manufacturers, equipment manufacturers who use these engines, and all other persons as if these engines were used in a motor vehicle. The prohibited acts of 40 CFR 1068.101(a)(1) apply to these new engines and equipment; however, we consider the certificate issued under 40 CFR part 86 for each engine to also be a valid certificate of conformity under this part 1048 for its model year. If we make a determination that these engines do not conform to the regulations during their useful life, we may require you to recall them under 40 CFR part 86 or 40 CFR 1068.505.

(d) *Specific requirements.* If you are an engine manufacturer or equipment manufacturer and meet all the following criteria and requirements regarding your new nonroad engine, the engine is eligible for an exemption under this section:

(1) Your engine must be covered by a valid certificate of conformity issued under 40 CFR part 86.

(2) You must not make any changes to the certified engine that could reasonably be expected to increase its exhaust emissions for any pollutant, or its evaporative emissions. For example, if you make any of the following changes to one of these engines, you do not qualify for this exemption:

(i) Change any fuel system or evaporative system parameters from the certified configuration (this does not apply to refueling controls).

(ii) Change, remove, or fail to properly install any other component, element of design, or calibration specified in the engine manufacturer's application for certification. This includes

aftertreatment devices and all related components.

(iii) Modify or design the engine cooling system so that temperatures or heat rejection rates are outside the original engine manufacturer's specified ranges.

(3) You must show that fewer than 50 percent of the engine family's total sales in the United States are used in nonroad applications. This includes engines used in any application without regard to which company manufactures the vehicle or equipment. Show this as follows:

(i) If you are the original manufacturer of the engine, base this showing on your sales information.

(ii) In all other cases, you must get the original manufacturer of the engine to confirm this based on its sales information.

(4) You must ensure that the engine has the label we require under 40 CFR part 86.

(5) You must add a permanent supplemental label to the engine in a position where it will remain clearly visible after installation in the equipment. In the supplemental label, do the following:

(i) Include the heading: ''NONROAD ENGINE EMISSION CONTROL INFORMATION''.

(ii) Include your full corporate name and trademark. You may instead include the full corporate name and trademark of another company you choose to designate.

(iii) State: ''THIS ENGINE WAS ADAPTED FOR NONROAD USE WITHOUT AFFECTING ITS EMISSION CONTROLS. THE EMISSION-CONTROL SYSTEM DEPENDS ON THE USE OF FUEL MEETING SPECIFICATIONS THAT APPLY FOR MOTOR-VEHICLE APPLICATIONS. OPERATING THE ENGINE ON OTHER FUELS MAY BE A VIOLATION OF FEDERAL LAW.''.

(iv) State the date you finished modifying the engine (month and year), if applicable.

(6) The original and supplemental labels must be readily visible after the engine is installed in the equipment or, if the equipment obscures the engine's emission control information label, the equipment manufacturer must attach duplicate labels, as described in 40 CFR 1068.105.

(7) Send the Designated Compliance Officer a signed letter by the end of each calendar year (or less often if we tell you) with all the following information:

(i) Identify your full corporate name, address, and telephone number.

(ii) List the engine or equipment models you expect to produce under this exemption in the coming year.

(iii) State: ''We produce each listed [engine or equipment] model for nonroad application without making any changes that could increase its certified emission levels, as described in 40 CFR 1048.605.''.

(e) *Failure to comply.* If your engines do not meet the criteria listed in paragraph (d) of this section, they will be subject to the standards, requirements, and prohibitions of this part 1048 and the certificate issued under 40 CFR part 86 will not be deemed to also be a certificate issued under this part 1048. Introducing these engines into commerce without a valid exemption or certificate of conformity under this part violates the prohibitions in 40 CFR 1068.101(a)(1).

(f) *Data submission.* We may require you to send us emission test data on any applicable nonroad duty cycles.

(g) *Participation in averaging, banking and trading.* Engines adapted for nonroad use under this section may generate credits under the ABT provisions in 40 CFR part 86. These engines must use emission credits under 40 CFR part 86 if they are certified to an FEL that exceeds an applicable standard under 40 CFR part 86.

[70 FR 40479, July 13, 2005]

§ 1048.610 What provisions apply to vehicles certified under the motor-vehicle program?

(a) *General provisions.* If you are a motor-vehicle manufacturer, this section allows you to introduce new nonroad engines or equipment into commerce if the vehicle is already certified to the requirements that apply under 40 CFR parts 85 and 86 for the appropriate model year. If you comply with all of the provisions of this section, we consider the certificate issued

under 40 CFR part 86 for each motor vehicle to also be a valid certificate of conformity for the engine under this part 1048 for its model year, without a separate application for certification under the requirements of this part 1048. See § 1048.605 or similar provisions that apply to motor-vehicle engines produced for nonroad equipment. The provisions of this section do not apply to engines certified to meet the requirements for highway motorcycles.

(b) *Equipment-manufacturer provisions.* If you are not a motor-vehicle manufacturer, you may produce nonroad equipment from motor vehicles under this section as long as you meet all the requirements and conditions specified in paragraph (d) of this section. If you modify the motor vehicle or its engine in any of the ways described in paragraph (d)(2) of this section, we will consider you a manufacturer of a new nonroad engine. Such modifications prevent you from using the provisions of this section.

(c) *Liability.* Engines, vehicles, and equipment for which you meet the requirements of this section are exempt from all the requirements and prohibitions of this part, except for those specified in this section. Engines exempted under this section must meet all the applicable requirements from 40 CFR parts 85 and 86. This applies to engine manufacturers, equipment manufacturers, and all other persons as if the nonroad equipment were motor vehicles. The prohibited acts of 40 CFR 1068.101(a)(1) apply to these new pieces of equipment; however, we consider the certificate issued under 40 CFR part 86 for each motor vehicle to also be a valid certificate of conformity for the engine under this part 1048 for its model year. If we make a determination that these engines, vehicles, or equipment do not conform to the regulations during their useful life, we may require you to recall them under 40 CFR part 86 or 40 CFR 1068.505.

(d) *Specific requirements.* If you are a motor-vehicle manufacturer and meet all the following criteria and requirements regarding your new nonroad equipment and its engine, the engine is eligible for an exemption under this section:

(1) Your equipment must be covered by a valid certificate of conformity as a motor vehicle issued under 40 CFR part 86.

(2) You must not make any changes to the certified vehicle that we could reasonably expect to increase its exhaust emissions for any pollutant, or its evaporative emissions if it is subject to evaporative-emission standards. For example, if you make any of the following changes, you do not qualify for this exemption:

(i) Change any fuel system or evaporative system parameters from the certified configuration, including refueling emission controls.

(ii) Change, remove, or fail to properly install any other component, element of design, or calibration specified in the vehicle manufacturer's application for certification. This includes aftertreatment devices and all related components.

(iii) Modify or design the engine cooling system so that temperatures or heat rejection rates are outside the original vehicle manufacturer's specified ranges.

(iv) Add more than 500 pounds to the curb weight of the originally certified motor vehicle.

(3) You must show that fewer than 50 percent of the engine family's total sales in the United States are used in nonroad applications. This includes any type of vehicle, without regard to which company completes the manufacturing of the nonroad equipment. Show this as follows:

(i) If you are the original manufacturer of the vehicle, base this showing on your sales information.

(ii) In all other cases, you must get the original manufacturer of the vehicle to confirm this based on their sales information.

(4) The equipment must have the vehicle emission control information and fuel labels we require under 40 CFR 86.007–35.

(5) You must add a permanent supplemental label to the equipment in a position where it will remain clearly visible. In the supplemental label, do the following:

(i) Include the heading: ''NONROAD ENGINE EMISSION CONTROL INFORMATION''.

(ii) Include your full corporate name and trademark. You may instead include the full corporate name and trademark of another company you choose to designate.

(iii) State: ''THIS VEHICLE WAS ADAPTED FOR NONROAD USE WITHOUT AFFECTING ITS EMISSION CONTROLS. THE EMISSION-CONTROL SYSTEM DEPENDS ON THE USE OF FUEL MEETING SPECIFICATIONS THAT APPLY FOR MOTOR-VEHICLE APPLICATIONS. OPERATING THE ENGINE ON OTHER FUELS MAY BE A VIOLATION OF FEDERAL LAW.''.

(iv) State the date you finished modifying the vehicle (month and year), if applicable.

(6) The original and supplemental labels must be readily visible in the fully assembled equipment.

(7) Send the Designated Compliance Officer a signed letter by the end of each calendar year (or less often if we tell you) with all the following information:

(i) Identify your full corporate name, address, and telephone number.

(ii) List the equipment models you expect to produce under this exemption in the coming year.

(iii) State: ''We produced each listed engine or equipment model for nonroad application without making any changes that could increase its certified emission levels, as described in 40 CFR 1048.610.''.

(e) *Failure to comply*. If your engines, vehicles, or equipment do not meet the criteria listed in paragraph (d) of this section, the engines will be subject to the standards, requirements, and prohibitions of this part 1048, and the certificate issued under 40 CFR part 86 will not be deemed to also be a certificate issued under this part 1048. Introducing these engines into commerce without a valid exemption or certificate of conformity under this part violates the prohibitions in 40 CFR 1068.101(a)(1).

(f) *Data submission*. We may require you to send us emission test data on any applicable nonroad duty cycles.

(g) *Participation in averaging, banking and trading*. Vehicles adapted for nonroad use under this section may generate credits under the ABT provisions in 40 CFR part 86. These vehicles must use emission credits under 40 CFR part 86 if they are certified to an FEL that exceeds an applicable standard under 40 CFR part 86.

[70 FR 40480, July 13, 2005]

§ 1048.615 What are the provisions for exempting engines designed for lawn and garden applications?

This section is intended for engines designed for lawn and garden applications, but it applies to any engines meeting the size criteria in paragraph (a) of this section.

(a) If an engine meets all the following criteria, it is exempt from the requirements of this part:

(1) The engine must have a total displacement of 1,000 cc or less.

(2) The engine must have a maximum engine power at or below 30 kW.

(3) The engine must be in an engine family that has a valid certificate of conformity showing that it meets emission standards for Class II engines under 40 CFR part 90 for the appropriate model year.

(b) The only requirements or prohibitions from this part that apply to an engine that meets the criteria in paragraph (a) of this section are in this section.

(c) If your engines do not meet the criteria listed in paragraph (a) of this section, they will be subject to the provisions of this part. Introducing these engines into commerce without a valid exemption or certificate of conformity violates the prohibitions in 40 CFR 1068.101.

(d) Engines exempted under this section are subject to all the requirements affecting engines under 40 CFR part 90. The requirements and restrictions of 40 CFR part 90 apply to anyone manufacturing these engines, anyone manufacturing equipment that uses these engines, and all other persons in the same manner as if these engines had a total maximum engine power at or below 19 kW.

[67 FR 68347, Nov. 8, 2002, as amended at 70 FR 40480, July 13, 2005]

§ 1048.620 What are the provisions for exempting large engines fueled by natural gas?

(a) If an engine meets all the following criteria, it is exempt from the requirements of this part:

(1) The engine must operate solely on natural gas or liquefied petroleum gas.

(2) The engine must have maximum engine power at or above 250 kW.

(3) The engine must be in an engine family that has a valid certificate of conformity showing that it meets emission standards for engines of that power rating under 40 CFR part 89 or 1039.

(b) The only requirements or prohibitions from this part that apply to an engine that is exempt under this section are in this section.

(c) If your engines do not meet the criteria listed in paragraph (a) of this section, they will be subject to the provisions of this part. Introducing these engines into commerce without a valid exemption or certificate of conformity violates the prohibitions in 40 CFR 1068.101.

(d) Engines exempted under this section are subject to all the requirements affecting engines under 40 CFR part 89 or 1039. The requirements and restrictions of 40 CFR part 89 or 1039 apply to anyone manufacturing these engines, anyone manufacturing equipment that uses these engines, and all other persons in the same manner as if these were nonroad diesel engines.

(e) You may request an exemption under this section by submitting an application for certification for the engines under 40 CFR part 89 or 1039.

[70 FR 40481, July 13, 2005]

§ 1048.625 What special provisions apply to engines using noncommercial fuels?

In § 1048.115(e), we generally require that engines meet emission standards for any adjustment within the full range of any adjustable parameters. For engines that use noncommercial fuels significantly different than the specified test fuel of the same type, you may ask to use the parameter-adjustment provisions of this section instead of those in § 1048.115(e). Engines certified under this section must be in a separate engine family.

(a) If we approve your request, the following provisions apply:

(1) You must certify the engine using the test fuel specified in § 1048.501.

(2) You may produce the engine without limits or stops that keep the engine adjusted within the certified range.

(3) You must specify in-use adjustments different than the adjustable settings appropriate for the specified test fuel, consistent with the provisions of paragraph (b)(1) of this section.

(b) To produce engines under this section, you must do the following:

(1) Specify in-use adjustments needed so the engine's level of emission control for each regulated pollutant is equivalent to that from the certified configuration.

(2) Add the following information to the emission control information label specified in § 1048.135:

(i) Include instructions describing how to adjust the engine to operate in a way that maintains the effectiveness of the emission-control system.

(ii) State: ''THIS ENGINE IS CERTIFIED TO OPERATE IN APPLICATIONS USING NONCOMMERCIAL FUEL. MALADJUSTMENT OF THE ENGINE IS A VIOLATION OF FEDERAL LAW SUBJECT TO CIVIL PENALTY.''.

(3) Keep records to document the destinations and quantities of engines produced under this section.

[70 FR 40481, July 13, 2005]

§ 1048.630 What are the provisions for exempting engines used solely for competition?

The provisions of this section apply for new engines built on or after January 1, 2006.

(a) Equipment manufacturers may use uncertified engines if the vehicles or equipment in which they are installed will be used solely for competition.

(b) The definition of nonroad engine in 40 CFR 1068.30 excludes engines used solely for competition. These engines are not required to comply with this part 1048, but 40 CFR 1068.101 prohibits the use of competition engines for noncompetition purposes.

(c) We consider a vehicle or piece of equipment to be one that will be used solely for competition if it has features that are not easily removed that would make its use other than in competition unsafe, impractical, or highly unlikely.

(d) As an engine manufacturer, your engine is exempt without our prior approval if you have a written request for an exempted engine from the equipment manufacturer showing the basis for believing that the equipment will be used solely for competition. You must permanently label engines exempted under this section to clearly indicate that they are to be used solely for competition. Failure to properly label an engine will void the exemption.

(e) We may discontinue an exemption under this section if we find that engines are not used solely for competition.

[70 FR 40481, July 13, 2005]

§ 1048.635 What special provisions apply to branded engines?

The following provisions apply if you identify the name and trademark of another company instead of your own on your emission control information label, as provided by § 1048.135(c)(2):

(a) You must have a contractual agreement with the other company that obligates that company to take the following steps:

(1) Meet the emission warranty requirements that apply under § 1048.120. This may involve a separate agreement involving reimbursement of warranty-related expenses.

(2) Report all warranty-related information to the certificate holder.

(b) In your application for certification, identify the company whose trademark you will use and describe the arrangements you have made to meet your requirements under this section.

(c) You remain responsible for meeting all the requirements of this chapter, including warranty and defect-reporting provisions.

[70 FR 40481, July 13, 2005]

Subpart H [Reserved]

Subpart I—Definitions and Other Reference Information

§ 1048.801 What definitions apply to this part?

The following definitions apply to this part. The definitions apply to all subparts unless we note otherwise. All undefined terms have the meaning the Act gives to them. The definitions follow:

Act means the Clean Air Act, as amended, 42 U.S.C. 7401–7671q.

Adjustable parameter means any device, system, or element of design that someone can adjust (including those which are difficult to access) and that, if adjusted, may affect emissions or engine performance during emission testing or normal in-use operation. This includes, but is not limited to, parameters related to injection timing and fueling rate. You may ask us to exclude a parameter that is difficult to access if it cannot be adjusted to affect emissions without significantly degrading engine performance, or if you otherwise show us that it will not be adjusted in a way that affects emissions during in-use operation.

Aftertreatment means relating to a catalytic converter, particulate filter, or any other system, component, or technology mounted downstream of the exhaust valve (or exhaust port) whose design function is to decrease emissions in the engine exhaust before it is exhausted to the environment. Exhaust-gas recirculation (EGR) and turbochargers are not aftertreatment.

Aircraft means any vehicle capable of sustained air travel above treetop heights.

All-terrain vehicle has the meaning given in 40 CFR 1051.801.

Amphibious vehicle means a vehicle with wheels or tracks that is designed primarily for operation on land and secondarily for operation in water.

Auxiliary emission-control device means any element of design that senses temperature, motive speed, engine rpm, transmission gear, or any other parameter for the purpose of activating, modulating, delaying, or deactivating the operation of any part of the emission-control system.

Blue Sky Series engine means an engine meeting the requirements of § 1048.140.

Brake power means the usable power output of the engine, not including power required to fuel, lubricate, or heat the engine, circulate coolant to the engine, or to operate aftertreatment devices.

Calibration means the set of specifications and tolerances specific to a particular design, version, or application of a component or assembly capable of functionally describing its operation over its working range.

Certification means relating to the process of obtaining a certificate of conformity for an engine family that complies with the emission standards and requirements in this part.

Certified emission level means the highest deteriorated emission level in an engine family for a given pollutant from either transient or steady-state testing.

Compression-ignition means relating to a type of reciprocating, internal-combustion engine that is not a spark-ignition engine.

Constant-speed engine means an engine whose certification is limited to constant-speed operation. Engines whose constant-speed governor function is removed or disabled are no longer constant-speed engines.

Constant-speed operation means engine operation with a governor that controls the operator input to maintain an engine at a reference speed, even under changing load. For example, an isochronous governor changes reference speed temporarily during a load change, then returns the engine to its original reference speed after the engine stabilizes. Isochronous governors typically allow speed changes up to 1.0 %. Another example is a speed-droop governor, which has a fixed reference speed at zero load and allows the reference speed to decrease as load increases. With speed-droop governors, speed typically decreases (3 to 10) % below the reference speed at zero load, such that the minimum reference speed occurs near the engine's point of maximum power.

Crankcase emissions means airborne substances emitted to the atmosphere from any part of the engine crankcase's ventilation or lubrication systems. The crankcase is the housing for the crankshaft and other related internal parts.

Critical emission-related component means any of the following components:

(1) Electronic control units, aftertreatment devices, fuel-metering components, EGR-system components, crankcase-ventilation valves, all components related to charge-air compression and cooling, and all sensors and actuators associated with any of these components.

(2) Any other component whose primary purpose is to reduce emissions.

Designated Compliance Officer means the Manager, Engine Programs Group (6405–J), U.S. Environmental Protection Agency, 1200 Pennsylvania Ave., NW., Washington, DC 20460.

Designated Enforcement Officer means the Director, Air Enforcement Division (2242A), U.S. Environmental Protection Agency, 1200 Pennsylvania Ave., NW., Washington, DC 20460.

Deteriorated emission level means the emission level that results from applying the appropriate deterioration factor to the official emission result of the emission-data engine.

Deterioration factor means the relationship between emissions at the end of useful life and emissions at the low-hour test point, expressed in one of the following ways:

(1) For multiplicative deterioration factors, the ratio of emissions at the end of useful life to emissions at the low-hour test point.

(2) For additive deterioration factors, the difference between emissions at the end of useful life and emissions at the low-hour test point.

Discrete-mode means relating to the discrete-mode type of steady-state test described in § 1048.505.

Emission-control system means any device, system, or element of design that controls or reduces the regulated emissions from an engine.

Emission-data engine means an engine that is tested for certification. This includes engines tested to establish deterioration factors.

Emission-related maintenance means maintenance that substantially affects emissions or is likely to substantially affect emission deterioration.

Engine configuration means a unique combination of engine hardware and calibration within an engine family. Engines within a single engine configuration differ only with respect to normal production variability.

Engine family has the meaning given in § 1048.230.

Engine manufacturer means the manufacturer of the engine. See the definition of ''manufacturer'' in this section.

Equipment manufacturer means a manufacturer of nonroad equipment. All nonroad equipment manufacturing entities under the control of the same person are considered to be a single nonroad equipment manufacturer.

Excluded means relating to an engine that either:

(1) Has been determined not to be a nonroad engine, as specified in 40 CFR 1068.30; or

(2) Is a nonroad engine that, according to §1048.5, is not subject to this part 1048.

Exempted has the meaning given in 40 CFR 1068.30.

Exhaust-gas recirculation means a technology that reduces emissions by routing exhaust gases that had been exhausted from the combustion chamber(s) back into the engine to be mixed with incoming air before or during combustion. The use of valve timing to increase the amount of residual exhaust gas in the combustion chamber(s) that is mixed with incoming air before or during combustion is not considered exhaust-gas recirculation for the purposes of this part.

Fuel system means all components involved in transporting, metering, and mixing the fuel from the fuel tank to the combustion chamber(s), including the fuel tank, fuel tank cap, fuel pump, fuel filters, fuel lines, carburetor or fuel-injection components, and all fuel-system vents.

Fuel type means a general category of fuels such as gasoline or natural gas. There can be multiple grades within a single fuel type, such as winter-grade and summer-grade gasoline.

Good engineering judgment has the meaning given in 40 CFR 1068.30. See 40 CFR 1068.5 for the administrative process we use to evaluate good engineering judgment.

High-cost warranted part means a component covered by the emission-related warranty with a replacement cost (at the time of certification) exceeding $400 (in 1998 dollars). Adjust this value using the most recent annual average consumer price index information published by the U.S. Bureau of Labor Statistics. For this definition, replacement cost includes the retail cost of the part plus labor and standard diagnosis.

High-load engine means an engine for which the engine manufacturer can provide clear evidence that operation below 75 percent of maximum load in its final application will be rare.

Hydrocarbon (HC) means the hydrocarbon group on which the emission standards are based for each fuel type, as described in §1048.101(e).

Identification number means a unique specification (for example, a model number/serial number combination) that allows someone to distinguish a particular engine from other similar engines.

Intermediate test speed has the meaning given in 40 CFR 1065.1001.

Low-hour means relating to an engine with stabilized emissions and represents the undeteriorated emission level. This would generally involve less than 300 hours of operation.

Manufacturer has the meaning given in section 216(1) of the Act. In general, this term includes any person who manufactures an engine, vehicle, or piece of equipment for sale in the United States or otherwise introduces a new nonroad engine into commerce in the United States. This includes importers who import engines, equipment, or vehicles for resale.

Marine engine means a nonroad engine that is installed or intended to be installed on a marine vessel. This includes a portable auxiliary engine only if its fueling, cooling, or exhaust system is an integral part of the vessel. There are two kinds of marine engines:

(1) Propulsion marine engine means a marine engine that moves a vessel through the water or directs the vessel's movement.

(2) Auxiliary marine engine means a marine engine not used for propulsion.

Marine vessel has the meaning given in 1 U.S.C. 3, except that it does not include amphibious vehicles. The definition in 1 U.S.C. 3 very broadly includes every craft capable of being used as a means of transportation on water.

Maximum engine power has one of the following meanings:

(1) For engines at or below 30 kW, maximum engine power has the meaning given in 40 CFR 90.3.

(2) For engines above 30 kW, maximum engine power has the meaning given in 40 CFR 1039.140

Maximum test speed has one of the following meanings:

(1) For variable-speed engines, maximum test speed has the meaning given in 40 CFR 1065.1001.

(2) For transient testing of constant-speed engines, maximum test speed means the highest speed at which the engine produces zero torque.

(3) For steady-state testing of constant-speed engines, maximum test speed means the speed at which the engine produces peak torque.

Maximum test torque has the meaning given in 40 CFR 1065.1001.

Model year means one of the following things:

(1) For freshly manufactured equipment and engines (see definition of ''new nonroad engine,'' paragraph (1)), model year means one of the following:

(i) Calendar year.

(ii) Your annual new model production period if it is different than the calendar year. This must include January 1 of the calendar year for which the model year is named. It may not begin before January 2 of the previous calendar year and it must end by December 31 of the named calendar year.

(2) For an engine that is converted to a nonroad engine after being placed into service as a motor-vehicle engine or a stationary engine, model year means the calendar year in which the engine was originally produced (see definition of ''new nonroad engine,'' paragraph (2)).

(3) For a nonroad engine excluded under §1048.5 that is later converted to operate in an application that is not excluded, model year means the calendar year in which the engine was originally produced (see definition of ''new nonroad engine,'' paragraph (3)).

(4) For engines that are not freshly manufactured but are installed in new nonroad equipment, model year means the calendar year in which the engine is installed in the new nonroad equipment (see definition of ''new nonroad engine,'' paragraph (4)).

(5) For imported engines:

(i) For imported engines described in paragraph (5)(i) of the definition of ''new nonroad engine,'' *model year* has the meaning given in paragraphs (1) through (4) of this definition.

(ii) [Reserved]

Motor vehicle has the meaning given in 40 CFR 85.1703(a).

New nonroad engine means any of the following things:

(1) A freshly manufactured nonroad engine for which the ultimate purchaser has never received the equitable or legal title. This kind of engine might commonly be thought of as ''brand new.'' In the case of this paragraph (1), the engine becomes new when it is fully assembled for the first time. The engine is no longer new when the ultimate purchaser receives the title or the product is placed into service, whichever comes first.

(2) An engine originally manufactured as a motor-vehicle engine or a stationary engine that is later intended to be used in a piece of nonroad equipment. In this case, the engine is no longer a motor-vehicle or stationary engine and becomes a ''new nonroad engine''. The engine is no longer new when it is placed into nonroad service.

(3) A nonroad engine that has been previously placed into service in an application we exclude under §1048.5, where that engine is installed in a piece of equipment that is covered by this part 1048. The engine is no longer new when it is placed into nonroad service covered by this part 1048. For example, this would apply to a marine-propulsion engine that is no longer used in a marine vessel.

(4) An engine not covered by paragraphs (1) through (3) of this definition that is intended to be installed in new nonroad equipment. The engine is no longer new when the ultimate purchaser receives a title for the equipment or the product is placed into service, whichever comes first. This generally includes installation of used engines in new equipment.

(5) An imported nonroad engine, subject to the following provisions:

(i) An imported nonroad engine covered by a certificate of conformity issued under this part that meets the criteria of one or more of paragraphs (1) through (4) of this definition, where the original engine manufacturer holds the certificate, is new as defined by those applicable paragraphs.

(ii) An imported nonroad engine covered by a certificate of conformity issued under this part, where someone other than the original engine manufacturer holds the certificate (such as when the engine is modified after its initial assembly), becomes new when it is imported. It is no longer new when the ultimate purchaser receives a title for the engine or it is placed into service, whichever comes first.

(iii) An imported nonroad engine that is not covered by a certificate of conformity issued under this part at the time of importation is new, but only if it was produced on or after January 1, 2004. This addresses uncertified engines and equipment initially placed into service that someone seeks to import into the United States. Importation of this kind of new nonroad engine (or equipment containing such an engine) is generally prohibited by 40 CFR part 1068.

New nonroad equipment means either of the following things:

(1) A nonroad piece of equipment for which the ultimate purchaser has never received the equitable or legal title. The product is no longer new when the ultimate purchaser receives this title or the product is placed into service, whichever comes first.

(2) An imported nonroad piece of equipment with an engine not covered by a certificate of conformity issued under this part at the time of importation and manufactured after January 1, 2004.

Noncommercial fuel means a combustible product that is not marketed as a commercial fuel, but is used as a fuel for nonroad engines. For example, this includes methane that is produced and released from landfills or oil wells, or similar unprocessed fuels that are not intended to meet any otherwise applicable fuel specifications. See § 1048.615 for provisions related to engines designed to burn noncommercial fuels.

Noncompliant engine means an engine that was originally covered by a certificate of conformity, but is not in the certified configuration or otherwise does not comply with the conditions of the certificate.

Nonconforming engine means an engine not covered by a certificate of conformity that would otherwise be subject to emission standards.

Nonmethane hydrocarbon means the difference between the emitted mass of total hydrocarbons and the emitted mass of methane.

Nonroad means relating to nonroad engines or equipment that includes nonroad engines.

Nonroad engine has the meaning given in 40 CFR 1068.30. In general this means all internal-combustion engines except motor vehicle engines, stationary engines, engines used solely for competition, or engines used in aircraft. This part does not apply to all nonroad engines (see § 1048.5).

Nonroad equipment means a piece of equipment that is powered by one or more nonroad engines.

Off-highway motorcycle has the meaning given in 40 CFR 1051.801. (Note: highway motorcycles are regulated under 40 CFR part 86.)

Official emission result means the measured emission rate for an emission-data engine on a given duty cycle before the application of any deterioration factor, but after the applicability of regeneration adjustment factors.

Owners manual means a document or collection of documents prepared by the engine manufacturer for the owner or operator to describe appropriate engine maintenance, applicable warranties, and any other information related to operating or keeping the engine. The owners manual is typically provided to the ultimate purchaser at the time of sale.

Oxides of nitrogen has the meaning given in 40 CFR part 1065.

Piece of equipment means any vehicle, vessel, or other type of equipment using engines to which this part applies.

Placed into service means put into initial use for its intended purpose.

Point of first retail sale means the location at which the initial retail sale occurs. This generally means an equipment dealership, but may also include an engine seller or distributor in cases where loose engines are sold to the general public for uses such as replacement engines.

Ramped-modal means relating to the ramped-modal type of steady-state test described in § 1048.505.

Rated speed means the maximum full-load governed speed for governed engines and the speed of maximum power for ungoverned engines.

Revoke has the meaning given in 40 CFR 1068.30.

Round has the meaning given in 40 CFR 1065.1001, unless otherwise specified.

Scheduled maintenance means adjusting, repairing, removing, disassembling, cleaning, or replacing components or systems periodically to keep a part or system from failing, malfunctioning, or wearing prematurely. It also may mean actions you expect are necessary to correct an overt indication of failure or malfunction for which periodic maintenance is not appropriate.

Severe-duty application includes concrete saws, concrete pumps, and any other application where an engine manufacturer can provide clear evidence that the majority of installations need air-cooled engines as a result of operation in a severe-duty environment.

Severe-duty engine means an engine from an engine family in which the majority of engines are installed in severe-duty applications.

Small-volume engine manufacturer means a company with fewer than 200 employees. This includes any employees working for parent or subsidiary companies.

Snowmobile has the meaning given in 40 CFR 1051.801.

Spark-ignition means relating to a gasoline-fueled engine or any other type of engine with a spark plug (or other sparking device) and with operating characteristics significantly similar to the theoretical Otto combustion cycle. Spark-ignition engines usually use a throttle to regulate intake air flow to control power during normal operation.

Steady-state means relating to emission tests in which engine speed and load are held at a finite set of essentially constant values. Steady-state tests are either discrete-mode tests or ramped-modal tests.

Stoichiometric means relating to the particular ratio of air and fuel such that if the fuel were fully oxidized, there would be no remaining fuel or oxygen. For example, stoichiometric combustion in a gasoline-fueled engine typically occurs at an air-fuel mass ratio of about 14.7.

Suspend has the meaning given in 40 CFR 1068.30.

Test engine means an engine in a test sample.

Test sample means the collection of engines selected from the population of an engine family for emission testing. This may include testing for certification, production-line testing, or in-use testing.

Tier 1 means relating to the emission standards and other requirements that apply beginning with the 2004 model year.

Tier 2 means relating to the emission standards and other requirements that apply beginning with the 2007 model year.

Total hydrocarbon means the combined mass of organic compounds measured by the specified procedure for measuring total hydrocarbon, expressed as a hydrocarbon with a hydrogen-to-carbon mass ratio of 1.85:1.

Total hydrocarbon equivalent means the sum of the carbon mass contributions of non-oxygenated hydrocarbons, alcohols and aldehydes, or other organic compounds that are measured separately as contained in a gas sample, expressed as exhaust hydrocarbon from petroleum-fueled engines. The hydrogen-to-carbon ratio of the equivalent hydrocarbon is 1.85:1.

Ultimate purchaser means, with respect to any new nonroad equipment or new nonroad engine, the first person who in good faith purchases such new nonroad equipment or new nonroad engine for purposes other than resale.

United States has the meaning given in 40 CFR 1068.30.

Upcoming model year means for an engine family the model year after the one currently in production.

U.S.-directed production volume means the number of engine units, subject to the requirements of this part, produced by a manufacturer for which the manufacturer has a reasonable assurance that sale was or will be made to ultimate purchasers in the United States.

Useful life means the period during which the engine is designed to properly function in terms of reliability

and fuel consumption, without being remanufactured, specified as a number of hours of operation or calendar years, whichever comes first. It is the period during which a new nonroad engine is required to comply with all applicable emission standards. See § 1048.101(g).

Variable-speed engine means an engine that is not a constant-speed engine.

Variable-speed operation means engine operation that does not meet the definition of constant-speed operation.

Void has the meaning given in 40 CFR 1068.30.

Volatile liquid fuel means any fuel other than diesel or biodiesel that is a liquid at atmospheric pressure and has a Reid Vapor Pressure higher than 2.0 pounds per square inch.

Wide-open throttle means maximum throttle opening. Unless this is specified at a given speed, it refers to maximum throttle opening at maximum speed. For electronically controlled or other engines with multiple possible fueling rates, wide-open throttle also means the maximum fueling rate at maximum throttle opening under test conditions.

We (us, our) means the Administrator of the Environmental Protection Agency and any authorized representatives.

[70 FR 40482, July 13, 2005]

§ 1048.805 What symbols, acronyms, and abbreviations does this part use?

The following symbols, acronyms, and abbreviations apply to this part:

°C degrees Celsius.
ASTM American Society for Testing and Materials.
cc cubic centimeters.
CFR Code of Federal Regulations.
cm centimeter.
CO carbon monoxide.
CO_2 carbon dioxide.
EPA Environmental Protection Agency.
g/kW-hr grams per kilowatt-hour.
HC hydrocarbon.
ISO International Organization for Standardization.
kPa kilopascals.
kW kilowatts.
LPG liquefied petroleum gas.
m meters.
MIL malfunction-indicator light.
mm Hg millimeters of mercury.
NARA National Archives and Records Administration.
NMHC nonmethane hydrocarbons.
NO_X oxides of nitrogen (NO and NO_2).
psi pounds per square inch of absolute pressure.
psig pounds per square inch of gauge pressure.
rpm revolutions per minute.
SAE Society of Automotive Engineers.
SI spark-ignition.
THC total hydrocarbon.
THCE total hydrocarbon equivalent.
U.S.C. United States Code.

[67 FR 68347, Nov. 8, 2002, as amended at 70 FR 40485, July 13, 2005]

§ 1048.810 What materials does this part reference?

Documents listed in this section have been incorporated by reference into this part. The Director of the Federal Register approved the incorporation by reference as prescribed in 5 U.S.C. 552(a) and 1 CFR part 51. Anyone may inspect copies at the U.S. EPA, Air and Radiation Docket and Information Center, 1301 Constitution Ave., NW., Room B102, EPA West Building, Washington, DC 20460 or at the National Archives and Records Administration (NARA). For information on the availability of this material at NARA, call 202–741–6030, or go to: *http://www.archives.gov/federal_register/code_of_federal_regulations/ibr_locations.html.*

(a) [Reserved]

(b) *SAE material.* Table 2 of this section lists material from the Society of Automotive Engineering that we have incorporated by reference. The first column lists the number and name of the material. The second column lists the sections of this part where we reference it. Anyone may purchase copies of these materials from the Society of Automotive Engineers, 400 Commonwealth Drive, Warrendale, PA 15096 or *http://www.sae.org.* Table 2 follows:

TABLE 2 OF § 1048.810—SAE MATERIALS

Document number and name	Part 1048 reference
SAE J1930, Electrical/Electronic Systems Diagnostic Terms, Definitions, Abbreviations, and Acronyms, revised May 1998	1048.135

TABLE 2 OF § 1048.810—SAE MATERIALS—Continued

Document number and name	Part 1048 reference
SAE J2260, Nonmetallic Fuel System Tubing with One or More Layers, November 1996	1048.105

(c) *ISO material.* Table 3 of this section lists material from the International Organization for Standardization that we have incorporated by reference. The first column lists the number and name of the material. The second column lists the section of this part where we reference it. Anyone may purchase copies of these materials from the International Organization for Standardization, Case Postale 56, CH–1211 Geneva 20, Switzerland or *http://www.iso.org*. Table 3 follows:

TABLE 3 OF § 1048.810—ISO MATERIALS

Document number and name	Part 1048 reference
ISO 9141–2 Road vehicles—Diagnostic systems—Part 2: CARB requirements for interchange of digital information, February 1994	1048.110
ISO 14230–4 Road vehicles—Diagnostic systems—Keyword Protocol 2000—Part 4: Requirements for emission-related systems, June 2000	1048.110

[70 FR 40485, July 13, 2005]

§ 1048.815 What provisions apply to confidential information?

(a) Clearly show what you consider confidential by marking, circling, bracketing, stamping, or some other method.

(b) We will store your confidential information as described in 40 CFR part 2. Also, we will disclose it only as specified in 40 CFR part 2. This applies both to any information you send us and to any information we collect from inspections, audits, or other site visits.

(c) If you send us a second copy without the confidential information, we will assume it contains nothing confidential whenever we need to release information from it.

(d) If you send us information without claiming it is confidential, we may make it available to the public without further notice to you, as described in 40 CFR 2.204.

[70 FR 40486, July 13, 2005]

§ 1048.820 How do I request a hearing?

(a) You may request a hearing under certain circumstances, as described elsewhere in this part. To do this, you must file a written request, including a description of your objection and any supporting data, within 30 days after we make a decision.

(b) For a hearing you request under the provisions of this part, we will approve your request if we find that your request raises a substantial factual issue.

(c) If we agree to hold a hearing, we will use the procedures specified in 40 CFR part 1068, subpart G.

[70 FR 40486, July 13, 2005]

APPENDIX I TO PART 1048—LARGE SPARK-IGNITION (SI) TRANSIENT CYCLE FOR CONSTANT-SPEED ENGINES

The following table shows the transient duty-cycle for constant-speed engines, as described in § 1048.510:

Time(s)	Normalized speed (percent)	Normalized torque (percent)[1]
1	58	5
2	58	5
3	58	5
4	58	5
5	58	5
6	58	5
7	58	5
8	58	5
9	58	5
10	58	5
11	58	5
12	65	8
13	72	9
14	79	12
15	86	14

Time(s)	Normalized speed (percent)	Normalized torque (percent)[1]
16	93	16
17	93	16
18	93	16
19	93	16
20	93	16
21	93	16
22	93	16
23	93	16
24	93	31
25	93	30
26	93	27
27	93	23
28	93	24
29	93	21
30	93	20
31	93	18
32	93	16
33	93	18
34	93	16
35	93	17
36	93	20
37	93	20
38	93	22
39	93	20
40	93	17
41	93	17
42	93	17
43	93	16
44	93	18
45	93	18
46	93	21
47	93	21
48	93	18
49	94	24
50	93	28
51	93	23
52	93	19
53	93	20
54	93	20
55	93	29
56	93	23
57	93	25
58	93	23
59	93	23
60	93	23
61	93	22
62	93	21
63	93	22
64	93	30
65	93	33
66	93	25
67	93	29
68	93	27
69	93	23
70	93	21
71	93	21
72	93	19
73	93	20
74	93	24
75	93	23
76	93	21
77	93	44
78	93	34
79	93	28
80	93	37
81	93	29
82	93	27
83	93	33
84	93	28
85	93	22
86	96	30
87	95	25
88	95	17
89	95	13
90	95	10
91	95	9
92	95	8
93	95	7
94	95	7
95	95	6
96	95	6
97	93	37
98	93	35
99	93	29
100	93	23
101	93	23
102	93	21
103	93	20
104	93	29
105	93	27
106	93	26
107	93	35
108	93	43
109	95	35
110	95	24
111	95	17
112	95	13
113	95	10
114	95	9
115	95	8
116	95	7
117	95	7
118	95	6
119	93	36
120	93	30
121	93	25
122	93	21
123	93	22
124	93	19
125	93	34
126	93	36
127	93	31
128	93	26
129	93	27
130	93	22
131	93	22
132	93	18
133	93	18
134	93	19
135	93	19
136	93	23
137	93	22
138	93	20
139	93	23
140	93	20
141	93	18
142	93	18
143	93	16
144	93	19
145	94	25
146	93	30
147	93	29
148	93	23
149	93	24
150	93	22
151	94	20
152	93	17
153	93	16
154	93	16
155	93	15
156	93	17
157	93	18
158	93	20
159	93	21

Time(s)	Normalized speed (percent)	Normalized torque (percent)[1]
160	93	18
161	93	17
162	92	54
163	93	38
164	93	29
165	93	24
166	93	24
167	93	24
168	93	23
169	93	20
170	93	20
171	93	18
172	93	19
173	93	19
174	93	16
175	93	16
176	93	16
177	93	18
178	93	21
179	93	20
180	93	20
181	93	17
182	93	19
183	93	17
184	93	18
185	93	16
186	93	16
187	93	16
188	93	17
189	93	16
190	93	17
191	93	18
192	93	17
193	93	16
194	93	17
195	93	17
196	93	22
197	93	19
198	93	19
199	95	21
200	95	16
201	95	12
202	95	10
203	96	8
204	96	7
205	95	7
206	96	7
207	95	6
208	96	6
209	96	6
210	88	6
211	89	48
212	93	34
213	93	27
214	93	26
215	93	25
216	93	22
217	93	23
218	93	21
219	93	21
220	93	23
221	93	23
222	93	23
223	93	23
224	93	23
225	93	22
226	93	22
227	93	24
228	93	23
229	93	23
230	93	21
231	93	20
232	93	20
233	93	20
234	93	22
235	93	26
236	93	22
237	93	20
238	93	18
239	93	22
240	93	20
241	94	27
242	93	22
243	93	23
244	93	21
245	93	22
246	95	22
247	95	16
248	95	12
249	95	10
250	95	9
251	95	8
252	96	7
253	95	7
254	95	6
255	92	42
256	93	36
257	93	33
258	92	60
259	93	48
260	93	36
261	93	30
262	93	28
263	93	24
264	93	24
265	93	23
266	93	23
267	93	25
268	93	27
269	93	29
270	93	26
271	93	26
272	93	21
273	93	23
274	93	23
275	94	23
276	93	40
277	94	67
278	93	46
279	93	38
280	93	29
281	93	28
282	93	27
283	93	29
284	93	28
285	94	34
286	93	31
287	93	30
288	94	42
289	93	31
290	93	29
291	93	27
292	93	23
293	93	23
294	93	20
295	93	20
296	93	23
297	93	23
298	93	24
299	93	25
300	93	20
301	93	25
302	93	23
303	93	23

Time(s)	Normalized speed (percent)	Normalized torque (percent)[1]
304	93	24
305	93	28
306	93	23
307	93	24
308	93	34
309	93	31
310	93	35
311	93	31
312	93	32
313	93	31
314	93	30
315	93	23
316	93	23
317	93	36
318	93	32
319	93	25
320	93	31
321	93	33
322	93	31
323	93	27
324	93	24
325	93	19
326	96	21
327	96	16
328	95	12
329	95	10
330	95	8
331	95	8
332	95	7
333	95	7
334	95	6
335	95	6
336	95	6
337	87	6
338	57	6
339	58	6
340	58	6
341	58	6
342	58	6
343	58	6
344	58	6
345	58	6
346	58	6
347	58	6
348	58	6
349	58	6
350	58	6
351	58	6
352	95	73
353	93	65
354	93	52
355	93	38
356	93	30
357	93	31
358	93	26
359	93	21
360	93	22
361	93	26
362	93	23
363	93	19
364	93	27
365	93	42
366	93	29
367	94	25
368	94	26
369	94	29
370	93	28
371	93	23
372	93	21
373	93	26
374	93	23
375	93	20
376	94	23
377	93	18
378	93	19
379	93	23
380	93	19
381	93	16
382	93	25
383	93	22
384	93	20
385	93	25
386	94	28
387	93	23
388	93	23
389	93	25
390	93	23
391	93	20
392	93	19
393	93	24
394	93	20
395	93	18
396	93	21
397	95	22
398	96	16
399	96	12
400	95	10
401	96	9
402	95	8
403	96	7
404	96	7
405	96	6
406	96	6
407	95	6
408	91	6
409	58	6
410	58	6
411	58	6
412	58	6
413	58	6
414	58	6
415	58	6
416	58	6
417	58	6
418	58	6
419	58	6
420	58	6
421	58	6
422	58	6
423	58	6
424	58	6
425	58	6
426	58	6
427	58	6
428	58	6
429	58	6
430	58	6
431	58	6
432	58	6
433	58	6
434	58	6
435	58	6
436	58	6
437	58	6
438	58	6
439	58	6
440	58	6
441	58	6
442	58	6
443	93	66
444	93	48
445	93	40
446	93	34
447	93	28

Time(s)	Normalized speed (percent)	Normalized torque (percent)[1]
448	93	23
449	93	28
450	93	27
451	93	23
452	93	19
453	93	25
454	93	24
455	93	22
456	93	31
457	93	36
458	93	28
459	93	25
460	93	35
461	93	34
462	93	29
463	93	37
464	93	36
465	93	38
466	93	31
467	93	29
468	93	34
469	93	36
470	93	34
471	93	31
472	93	26
473	93	21
474	94	16
475	96	19
476	96	15
477	95	11
478	96	10
479	95	8
480	95	7
481	95	7
482	96	7
483	96	6
484	96	6
485	95	6
486	85	6
487	56	74
488	93	52
489	93	42
490	93	36
491	93	35
492	93	33
493	93	38
494	93	40
495	93	29
496	93	23
497	93	23
498	93	24
499	93	24
500	93	20
501	93	19
502	93	16
503	93	21
504	93	23
505	93	24
506	93	22
507	93	18
508	93	21
509	95	18
510	95	20
511	95	15
512	96	11
513	95	10
514	96	8
515	95	7
516	95	7
517	95	7
518	95	6
519	96	6
520	96	6
521	83	6
522	56	6
523	58	6
524	72	54
525	94	51
526	93	42
527	93	42
528	93	31
529	93	25
530	93	21
531	93	17
532	93	15
533	93	15
534	93	16
535	93	15
536	93	14
537	93	15
538	93	16
539	94	15
540	93	45
541	93	45
542	93	41
543	93	33
544	93	26
545	93	21
546	93	20
547	93	17
548	93	16
549	93	17
550	93	16
551	93	14
552	93	16
553	93	15
554	93	14
555	93	16
556	93	15
557	93	14
558	93	13
559	93	14
560	93	14
561	93	15
562	93	17
563	93	17
564	93	22
565	93	22
566	93	19
567	93	19
568	93	20
569	93	18
570	93	20
571	93	20
572	93	42
573	93	32
574	93	25
575	93	26
576	93	23
577	93	21
578	93	23
579	93	19
580	93	21
581	93	20
582	93	20
583	93	20
584	93	18
585	93	18
586	93	21
587	93	19
588	93	21
589	93	19
590	93	19
591	93	18

Time(s)	Normalized speed (percent)	Normalized torque (percent)[1]
592	93	18
593	93	17
594	93	16
595	93	16
596	93	15
597	93	16
598	93	19
599	93	52
600	93	45
601	95	39
602	95	39
603	95	39
604	95	39
605	94	30
606	95	30
607	95	29
608	95	24
609	94	30
610	95	28
611	94	25
612	94	29
613	95	32
614	95	33
615	95	44
616	99	37
617	98	27
618	98	19
619	98	13
620	98	11
621	98	9
622	98	7
623	98	7
624	98	6
625	98	6
626	98	6
627	98	5
628	69	6
629	49	5
630	51	5
631	51	5
632	51	5
633	51	6
634	51	6
635	51	6
636	51	6
637	51	5
638	51	5
639	51	5
640	51	5
641	51	6
642	51	6
643	51	6
644	51	6
645	51	5
646	51	6
647	51	5
648	51	6
649	51	5
650	96	35
651	95	29
652	95	26
653	95	31
654	95	34
655	95	29
656	95	29
657	95	30
658	95	24
659	95	19
660	95	23
661	95	21
662	95	22
663	95	19
664	95	18
665	95	20
666	94	60
667	95	48
668	95	39
669	95	36
670	95	27
671	95	22
672	95	19
673	95	22
674	95	19
675	94	17
676	95	27
677	95	24
678	98	19
679	98	19
680	98	14
681	98	11
682	98	9
683	98	8
684	98	7
685	98	6
686	98	6
687	98	6
688	98	6
689	98	5
690	81	5
691	49	5
692	78	48
693	95	37
694	95	31
695	94	32
696	94	34
697	95	29
698	95	25
699	94	26
700	95	28
701	95	27
702	94	28
703	95	30
704	95	27
705	95	26
706	95	27
707	95	25
708	95	26
709	95	25
710	95	23
711	95	20
712	95	23
713	95	20
714	95	18
715	94	22
716	95	19
717	95	23
718	95	27
719	95	26
720	95	23
721	95	20
722	99	23
723	98	20
724	98	14
725	98	11
726	98	9
727	98	8
728	98	7
729	98	6
730	98	6
731	98	6
732	98	5
733	98	5
734	73	6
735	49	5

Time(s)	Normalized speed (percent)	Normalized torque (percent)[1]
736	50	77
737	95	39
738	95	30
739	95	28
740	94	31
741	95	36
742	95	36
743	95	30
744	95	26
745	95	27
746	95	22
747	95	18
748	95	19
749	95	25
750	94	25
751	95	21
752	95	22
753	95	27
754	95	27
755	95	27
756	95	24
757	94	20
758	94	23
759	94	26
760	95	25
761	95	25
762	95	21
763	95	28
764	94	39
765	95	32
766	95	24
767	95	19
768	98	20
769	98	17
770	98	12
771	98	10
772	98	8
773	98	7
774	98	6
775	98	6
776	95	61
777	94	51
778	95	40
779	94	35
780	94	36
781	94	32
782	95	24
783	94	19
784	94	19
785	95	19
786	95	19
787	94	18
788	94	20
789	94	23
790	94	22
791	95	23
792	94	20
793	94	18
794	95	16
795	95	17
796	94	16
797	94	16
798	94	17
799	94	18
800	94	21
801	95	21
802	94	19
803	95	18
804	94	19
805	95	22
806	95	21
807	95	19
808	94	20
809	94	22
810	94	22
811	94	22
812	95	23
813	94	22
814	95	22
815	95	19
816	95	16
817	95	14
818	95	18
819	95	18
820	94	20
821	94	22
822	94	19
823	95	18
824	95	17
825	95	19
826	95	19
827	95	19
828	94	19
829	94	21
830	94	19
831	94	17
832	94	18
833	94	21
834	94	19
835	95	18
836	95	19
837	95	17
838	94	15
839	94	17
840	95	19
841	94	22
842	94	21
843	94	18
844	94	16
845	95	14
846	95	14
847	94	19
848	95	20
849	95	23
850	98	23
851	98	22
852	98	16
853	98	12
854	98	9
855	98	8
856	98	7
857	98	6
858	98	6
859	98	6
860	98	5
861	98	5
862	80	5
863	49	5
864	51	5
865	51	5
866	51	6
867	51	6
868	51	6
869	51	6
870	51	5
871	51	6
872	51	7
873	96	45
874	94	44
875	94	34
876	94	41
877	95	44
878	94	32
879	95	26

Time(s)	Normalized speed (percent)	Normalized torque (percent)[1]
880	94	20
881	95	29
882	95	27
883	95	21
884	95	34
885	95	31
886	94	26
887	95	22
888	95	23
889	95	19
890	94	18
891	94	20
892	94	26
893	95	29
894	94	32
895	95	26
896	95	34
897	95	30
898	95	24
899	95	19
900	94	17
901	94	16
902	98	19
903	98	17
904	98	12
905	98	10
906	98	8
907	98	7
908	98	6
909	98	6
910	98	6
911	98	5
912	98	5
913	98	5
914	69	5
915	49	5
916	51	5
917	51	6
918	51	6
919	69	75
920	95	70
921	95	57
922	94	49
923	94	38
924	95	43
925	94	51
926	94	41
927	98	42
928	95	89
929	95	66
930	94	52
931	95	41
932	95	34
933	95	34
934	94	30
935	94	30
936	95	29
937	94	28
938	95	24
939	94	34
940	95	26
941	94	36
942	95	27
943	95	25
944	95	26
945	94	21
946	94	19
947	98	21
948	93	53
949	94	45
950	94	35
951	95	28
952	95	23
953	95	20
954	95	17
955	94	19
956	94	18
957	94	18
958	94	18
959	94	19
960	97	17
961	98	19
962	98	14
963	98	11
964	98	9
965	98	7
966	98	7
967	98	6
968	98	6
969	98	6
970	98	5
971	98	5
972	82	5
973	49	5
974	51	6
975	51	6
976	51	6
977	51	5
978	51	6
979	72	58
980	94	36
981	95	28
982	95	24
983	95	25
984	95	26
985	94	30
986	94	26
987	95	34
988	95	57
989	95	45
990	94	37
991	95	34
992	95	27
993	95	27
994	95	29
995	98	22
996	94	84
997	94	74
998	95	62
999	94	51
1000	95	50
1001	95	81
1002	94	65
1003	95	49
1004	94	56
1005	95	65
1006	94	59
1007	99	58
1008	98	41
1009	98	27
1010	98	19
1011	98	13
1012	98	11
1013	98	9
1014	98	8
1015	98	7
1016	98	6
1017	98	6
1018	98	6
1019	71	6
1020	49	5
1021	51	6
1022	51	6
1023	51	6

Time(s)	Normalized speed (percent)	Normalized torque (percent)[1]
1024	51	6
1025	51	6
1026	51	6
1027	51	6
1028	51	6
1029	51	6
1030	51	6
1031	51	5
1032	51	6
1033	51	5
1034	51	6
1035	51	6
1036	51	6
1037	51	5
1038	51	5
1039	51	6
1040	51	6
1041	69	59
1042	94	48
1043	95	34
1044	95	29
1045	95	26
1046	94	27
1047	95	31
1048	95	26
1049	95	34
1050	95	29
1051	95	31
1052	95	29
1053	95	35
1054	95	38
1055	94	41
1056	95	28
1057	95	36
1058	94	30
1059	94	26
1060	94	33
1061	95	34
1062	95	27
1063	98	26
1064	98	19
1065	98	13
1066	98	11
1067	98	9
1068	98	7
1069	98	7
1070	98	6
1071	98	6
1072	98	6
1073	98	5
1074	89	6
1075	49	5
1076	51	6
1077	51	6
1078	51	6
1079	51	6
1080	51	6
1081	51	6
1082	51	6
1083	50	6
1084	51	6
1085	51	6
1086	51	6
1087	51	6
1088	51	6
1089	51	6
1090	51	6
1091	56	74
1092	95	56
1093	94	49
1094	95	47
1095	94	43
1096	94	33
1097	95	50
1098	94	40
1099	95	33
1100	95	24
1101	94	22
1102	94	22
1103	94	25
1104	95	27
1105	95	32
1106	94	29
1107	94	26
1108	94	26
1109	94	24
1110	98	52
1111	94	41
1112	99	35
1113	95	58
1114	95	58
1115	98	57
1116	98	38
1117	98	26
1118	93	63
1119	94	59
1120	98	100
1121	94	73
1122	98	53
1123	94	76
1124	95	61
1125	94	49
1126	94	37
1127	97	50
1128	98	36
1129	98	25
1130	98	18
1131	98	12
1132	98	10
1133	98	8
1134	98	7
1135	98	7
1136	98	6
1137	98	6
1138	98	6
1139	80	6
1140	49	6
1141	78	61
1142	95	50
1143	94	43
1144	94	42
1145	94	31
1146	95	30
1147	95	34
1148	95	28
1149	95	27
1150	94	27
1151	95	31
1152	95	42
1153	94	41
1154	95	37
1155	95	43
1156	95	34
1157	95	31
1158	95	27
1159	95	23
1160	95	27
1161	96	38
1162	95	40
1163	95	39
1164	95	26
1165	95	33
1166	94	28
1167	94	34

Time(s)	Normalized speed (percent)	Normalized torque (percent)[1]
1168	98	73
1169	95	49
1170	95	51
1171	94	55
1172	95	48
1173	95	35
1174	95	39
1175	95	39
1176	94	41
1177	95	30
1178	95	23
1179	94	19
1180	95	25
1181	94	29
1182	98	27
1183	95	89
1184	95	74
1185	94	60
1186	94	48
1187	94	41
1188	94	29
1189	94	24
1190	95	19
1191	94	21
1192	95	29
1193	95	28
1194	95	27
1195	94	23
1196	95	25
1197	95	26
1198	94	22
1199	95	19
1200	94	17

[1] The percent torque is relative to maximum torque at the commanded engine speed.

[67 FR 68347, Nov. 8, 2002, as amended at 70 FR 40486, July 13, 2005]

APPENDIX II TO PART 1048—LARGE SPARK-IGNITION (SI) COMPOSITE TRANSIENT CYCLE

The following table shows the transient duty-cycle for engines that are not constant-speed engines, as described in §1048.510:

Time(s)	Normalized speed (percent)	Normalized torque (percent)
0	0	0
1	0	0
2	0	0
3	0	0
4	0	0
5	0	0
6	0	0
7	0	0
8	0	0
9	1	8
10	6	54
11	8	61
12	34	59
13	22	46
14	5	51
15	18	51
16	31	50
17	30	56
18	31	49
19	25	66
20	58	55
21	43	31
22	16	45
23	24	38
24	24	27
25	30	33
26	45	65
27	50	49
28	23	42
29	13	42
30	9	45
31	23	30
32	37	45
33	44	50
34	49	52
35	55	49
36	61	46
37	66	38
38	42	33
39	17	41
40	17	37
41	7	50
42	20	32
43	5	55
44	30	42
45	44	53
46	45	56
47	41	52
48	24	41
49	15	40
50	11	44
51	32	31
52	38	54
53	38	47
54	9	55
55	10	50
56	33	55
57	48	56
58	49	47
59	33	44
60	52	43
61	55	43
62	59	38
63	44	28
64	24	37
65	12	44
66	9	47
67	12	52
68	34	21
69	29	44
70	44	54
71	54	62
72	62	57
73	72	56
74	88	71
75	100	69
76	100	34
77	100	42
78	100	54
79	100	58
80	100	38
81	83	17
82	61	15
83	43	22
84	24	35
85	16	39
86	15	45
87	32	34
88	14	42
89	8	48
90	5	51
91	10	41

Time(s)	Normalized speed (percent)	Normalized torque (percent)
92	12	37
93	4	47
94	3	49
95	3	50
96	4	49
97	4	48
98	8	43
99	2	51
100	5	46
101	8	41
102	4	47
103	3	49
104	6	45
105	3	48
106	10	42
107	18	27
108	3	50
109	11	41
110	34	29
111	51	57
112	67	63
113	61	32
114	44	31
115	48	54
116	69	65
117	85	65
118	81	29
119	74	21
120	62	23
121	76	58
122	96	75
123	100	77
124	100	27
125	100	79
126	100	79
127	100	81
128	100	57
129	99	52
130	81	35
131	69	29
132	47	22
133	34	28
134	27	37
135	83	60
136	100	74
137	100	7
138	100	2
139	70	18
140	23	39
141	5	54
142	11	40
143	11	34
144	11	41
145	19	25
146	16	32
147	20	31
148	21	38
149	21	42
150	9	51
151	4	49
152	2	51
153	1	58
154	21	57
155	29	47
156	33	45
157	16	49
158	38	45
159	37	43
160	35	42
161	39	43
162	51	49
163	59	55
164	65	54
165	76	62
166	84	59
167	83	29
168	67	35
169	84	54
170	90	58
171	93	43
172	90	29
173	66	19
174	52	16
175	49	17
176	56	38
177	73	71
178	86	80
179	96	75
180	89	27
181	66	17
182	50	18
183	36	25
184	36	24
185	38	40
186	40	50
187	27	48
188	19	48
189	23	50
190	19	45
191	6	51
192	24	48
193	49	67
194	47	49
195	22	44
196	25	40
197	38	54
198	43	55
199	40	52
200	14	49
201	11	45
202	7	48
203	26	41
204	41	59
205	53	60
206	44	54
207	22	40
208	24	41
209	32	53
210	44	74
211	57	25
212	22	49
213	29	45
214	19	37
215	14	43
216	36	40
217	43	63
218	42	49
219	15	50
220	19	44
221	47	59
222	67	80
223	76	74
224	87	66
225	98	61
226	100	38
227	97	27
228	100	53
229	100	72
230	100	49
231	100	4
232	100	13
233	87	15
234	53	26
235	33	27

Time(s)	Normalized speed (percent)	Normalized torque (percent)
236	39	19
237	51	33
238	67	54
239	83	60
240	95	52
241	100	50
242	100	36
243	100	25
244	85	16
245	62	16
246	40	26
247	56	39
248	81	75
249	98	86
250	100	76
251	100	51
252	100	78
253	100	83
254	100	100
255	100	66
256	100	85
257	100	72
258	100	45
259	98	58
260	60	30
261	43	32
262	71	36
263	44	32
264	24	38
265	42	17
266	22	51
267	13	53
268	23	45
269	29	50
270	28	42
271	21	55
272	34	57
273	44	47
274	19	46
275	13	44
276	25	36
277	43	51
278	55	73
279	68	72
280	76	63
281	80	45
282	83	40
283	78	26
284	60	20
285	47	19
286	52	25
287	36	30
288	40	26
289	45	34
290	47	35
291	42	28
292	46	38
293	48	44
294	68	61
295	70	47
296	48	28
297	42	22
298	31	29
299	22	35
300	28	28
301	46	46
302	62	69
303	76	81
304	88	85
305	98	81
306	100	74
307	100	13
308	100	11
309	100	17
310	99	3
311	80	7
312	62	11
313	63	11
314	64	16
315	69	43
316	81	67
317	93	74
318	100	72
319	94	27
320	73	15
321	40	33
322	40	52
323	50	50
324	11	53
325	12	45
326	5	50
327	1	55
328	7	55
329	62	60
330	80	28
331	23	37
332	39	58
333	47	24
334	59	51
335	58	68
336	36	52
337	18	42
338	36	52
339	59	73
340	72	85
341	85	92
342	99	90
343	100	72
344	100	18
345	100	76
346	100	64
347	100	87
348	100	97
349	100	84
350	100	100
351	100	91
352	100	83
353	100	93
354	100	100
355	94	43
356	72	10
357	77	3
358	48	2
359	29	5
360	59	19
361	63	5
362	35	2
363	24	3
364	28	2
365	36	16
366	54	23
367	60	10
368	33	1
369	23	0
370	16	0
371	11	0
372	20	0
373	25	2
374	40	3
375	33	4
376	34	5
377	46	7
378	57	10
379	66	11

Time(s)	Normalized speed (percent)	Normalized torque (percent)
380	75	14
381	79	11
382	80	16
383	92	21
384	99	16
385	83	2
386	71	2
387	69	4
388	67	4
389	74	16
390	86	25
391	97	28
392	100	15
393	83	2
394	62	4
395	40	6
396	49	10
397	36	5
398	27	4
399	29	3
400	22	2
401	13	3
402	37	36
403	90	26
404	41	2
405	25	2
406	29	2
407	38	7
408	50	13
409	55	10
410	29	3
411	24	7
412	51	16
413	62	15
414	72	35
415	91	74
416	100	73
417	100	8
418	98	11
419	100	59
420	100	98
421	100	99
422	100	75
423	100	95
424	100	100
425	100	97
426	100	90
427	100	86
428	100	82
429	97	43
430	70	16
431	50	20
432	42	33
433	89	64
434	89	77
435	99	95
436	100	41
437	77	12
438	29	37
439	16	41
440	16	38
441	15	36
442	18	44
443	4	55
444	24	26
445	26	35
446	15	45
447	21	39
448	29	52
449	26	46
450	27	50
451	13	43
452	25	36
453	37	57
454	29	46
455	17	39
456	13	41
457	19	38
458	28	35
459	8	51
460	14	36
461	17	47
462	34	39
463	34	57
464	11	70
465	13	51
466	13	68
467	38	44
468	53	67
469	29	69
470	19	65
471	52	45
472	61	79
473	29	70
474	15	53
475	15	60
476	52	40
477	50	61
478	13	74
479	46	51
480	60	73
481	33	84
482	31	63
483	41	42
484	26	69
485	23	65
486	48	49
487	28	57
488	16	67
489	39	48
490	47	73
491	35	87
492	26	73
493	30	61
494	34	49
495	35	66
496	56	47
497	49	64
498	59	64
499	42	69
500	6	77
501	5	59
502	17	59
503	45	53
504	21	62
505	31	60
506	53	68
507	48	79
508	45	61
509	51	47
510	41	48
511	26	58
512	21	62
513	50	52
514	39	65
515	23	65
516	42	62
517	57	80
518	66	81
519	64	62
520	45	42
521	33	42
522	27	57
523	31	59

Time(s)	Normalized speed (percent)	Normalized torque (percent)
524	41	53
525	45	72
526	48	73
527	46	90
528	56	76
529	64	76
530	69	64
531	72	59
532	73	58
533	71	56
534	66	48
535	61	50
536	55	56
537	52	52
538	54	49
539	61	50
540	64	54
541	67	54
542	68	52
543	60	53
544	52	50
545	45	49
546	38	45
547	32	45
548	26	53
549	23	56
550	30	49
551	33	55
552	35	59
553	33	65
554	30	67
555	28	59
556	25	58
557	23	56
558	22	57
559	19	63
560	14	63
561	31	61
562	35	62
563	21	80
564	28	65
565	7	74
566	23	54
567	38	54
568	14	78
569	38	58
570	52	75
571	59	81
572	66	69
573	54	44
574	48	34
575	44	33
576	40	40
577	28	58
578	27	63
579	35	45
580	20	66
581	15	60
582	10	52
583	22	56
584	30	62
585	21	67
586	29	53
587	41	56
588	15	67
589	24	56
590	42	69
591	39	83
592	40	73
593	35	67
594	32	61
595	30	65
596	30	72
597	48	51
598	66	58
599	62	71
600	36	63
601	17	59
602	16	50
603	16	62
604	34	48
605	51	66
606	35	74
607	15	56
608	19	54
609	43	65
610	52	80
611	52	83
612	49	57
613	48	46
614	37	36
615	25	44
616	14	53
617	13	64
618	23	56
619	21	63
620	18	67
621	20	54
622	16	67
623	26	56
624	41	65
625	28	62
626	19	60
627	33	56
628	37	70
629	24	79
630	28	57
631	40	57
632	40	58
633	28	44
634	25	41
635	29	53
636	31	55
637	26	64
638	20	50
639	16	53
640	11	54
641	13	53
642	23	50
643	32	59
644	36	63
645	33	59
646	24	52
647	20	52
648	22	55
649	30	53
650	37	59
651	41	58
652	36	54
653	29	49
654	24	53
655	14	57
656	10	54
657	9	55
658	10	57
659	13	55
660	15	64
661	31	57
662	19	69
663	14	59
664	33	57
665	41	65
666	39	64
667	39	59

Time(s)	Normalized speed (percent)	Normalized torque (percent)
668	39	51
669	28	41
670	19	49
671	27	54
672	37	63
673	32	74
674	16	70
675	12	67
676	13	60
677	17	56
678	15	62
679	25	47
680	27	64
681	14	71
682	5	65
683	6	57
684	6	57
685	15	52
686	22	61
687	14	77
688	12	67
689	12	62
690	14	59
691	15	58
692	18	55
693	22	53
694	19	69
695	14	67
696	9	63
697	8	56
698	17	49
699	25	55
700	14	70
701	12	60
702	22	57
703	27	67
704	29	68
705	34	62
706	35	61
707	28	78
708	11	71
709	4	58
710	5	58
711	10	56
712	20	63
713	13	76
714	11	65
715	9	60
716	7	55
717	8	53
718	10	60
719	28	53
720	12	73
721	4	64
722	4	61
723	4	61
724	10	56
725	8	61
726	20	56
727	32	62
728	33	66
729	34	73
730	31	61
731	33	55
732	33	60
733	31	59
734	29	58
735	31	53
736	33	51
737	33	48
738	27	44
739	21	52
740	13	57
741	12	56
742	10	64
743	22	47
744	15	74
745	8	66
746	34	47
747	18	71
748	9	57
749	11	55
750	12	57
751	10	61
752	16	53
753	12	75
754	6	70
755	12	55
756	24	50
757	28	60
758	28	64
759	23	60
760	20	56
761	26	50
762	28	55
763	18	56
764	15	52
765	11	59
766	16	59
767	34	54
768	16	82
769	15	64
770	36	53
771	45	64
772	41	59
773	34	50
774	27	45
775	22	52
776	18	55
777	26	54
778	39	62
779	37	71
780	32	58
781	24	48
782	14	59
783	7	59
784	7	55
785	18	49
786	40	62
787	44	73
788	41	68
789	35	48
790	29	54
791	22	69
792	46	53
793	59	71
794	69	68
795	75	47
796	62	32
797	48	35
798	27	59
799	13	58
800	14	54
801	21	53
802	23	56
803	23	57
804	23	65
805	13	65
806	9	64
807	27	56
808	26	78
809	40	61
810	35	76
811	28	66

Time(s)	Normalized speed (percent)	Normalized torque (percent)
812	23	57
813	16	50
814	11	53
815	9	57
816	9	62
817	27	57
818	42	69
819	47	75
820	53	67
821	61	62
822	63	53
823	60	54
824	56	44
825	49	39
826	39	35
827	30	34
828	33	46
829	44	56
830	50	56
831	44	52
832	38	46
833	33	44
834	29	45
835	24	46
836	18	52
837	9	55
838	10	54
839	20	53
840	27	58
841	29	59
842	30	62
843	30	65
844	27	66
845	32	58
846	40	56
847	41	57
848	18	73
849	15	55
850	18	50
851	17	52
852	20	49
853	16	62
854	4	67
855	2	64
856	7	54
857	10	50
858	9	57
859	5	62
860	12	51
861	14	65
862	9	64
863	31	50
864	30	78
865	21	65
866	14	51
867	10	55
868	6	59
869	7	59
870	19	54
871	23	61
872	24	62
873	34	61
874	51	67
875	60	66
876	58	55
877	60	52
878	64	55
879	68	51
880	63	54
881	64	50
882	68	58
883	73	47
884	63	40
885	50	38
886	29	61
887	14	61
888	14	53
889	42	6
890	58	6
891	58	6
892	77	39
893	93	56
894	93	44
895	93	37
896	93	31
897	93	25
898	93	26
899	93	27
900	93	25
901	93	21
902	93	22
903	93	24
904	93	23
905	93	27
906	93	34
907	93	32
908	93	26
909	93	31
910	93	34
911	93	31
912	93	33
913	93	36
914	93	37
915	93	34
916	93	30
917	93	32
918	93	35
919	93	35
920	93	32
921	93	28
922	93	23
923	94	18
924	95	18
925	96	17
926	95	13
927	96	10
928	95	9
929	95	7
930	95	7
931	96	7
932	96	6
933	96	6
934	95	6
935	90	6
936	69	43
937	76	62
938	93	47
939	93	39
940	93	35
941	93	34
942	93	36
943	93	39
944	93	34
945	93	26
946	93	23
947	93	24
948	93	24
949	93	22
950	93	19
951	93	17
952	93	19
953	93	22
954	93	24
955	93	23

Time(s)	Normalized speed (percent)	Normalized torque (percent)
956	93	20
957	93	20
958	94	19
959	95	19
960	95	17
961	96	13
962	95	10
963	96	9
964	95	7
965	95	7
966	95	7
967	95	6
968	96	6
969	96	6
970	89	6
971	68	6
972	57	6
973	66	32
974	84	52
975	93	46
976	93	42
977	93	36
978	93	28
979	93	23
980	93	19
981	93	16
982	93	15
983	93	16
984	93	15
985	93	14
986	93	15
987	93	16
988	94	15
989	93	32
990	93	45
991	93	43
992	93	37
993	93	29
994	93	23
995	93	20
996	93	18
997	93	16
998	93	17
999	93	16
1000	93	15
1001	93	15
1002	93	15
1003	93	14
1004	93	15
1005	93	15
1006	93	14
1007	93	13
1008	93	14
1009	93	14
1010	93	15
1011	93	16
1012	93	17
1013	93	20
1014	93	22
1015	93	20
1016	93	19
1017	93	20
1018	93	19
1019	93	19
1020	93	20
1021	93	32
1022	93	37
1023	93	28
1024	93	26
1025	93	24
1026	93	22
1027	93	22
1028	93	21
1029	93	20
1030	93	20
1031	93	20
1032	93	20
1033	93	19
1034	93	18
1035	93	20
1036	93	20
1037	93	20
1038	93	20
1039	93	19
1040	93	18
1041	93	18
1042	93	17
1043	93	16
1044	93	16
1045	93	15
1046	93	16
1047	93	18
1048	93	37
1049	93	48
1050	93	38
1051	93	31
1052	93	26
1053	93	21
1054	93	18
1055	93	16
1056	93	17
1057	93	18
1058	93	19
1059	93	21
1060	93	20
1061	93	18
1062	93	17
1063	93	17
1064	93	18
1065	93	18
1066	93	18
1067	93	19
1068	93	18
1069	93	18
1070	93	20
1071	93	23
1072	93	25
1073	93	25
1074	93	24
1075	93	24
1076	93	22
1077	93	22
1078	93	22
1079	93	19
1080	93	16
1081	95	17
1082	95	37
1083	93	43
1084	93	32
1085	93	27
1086	93	26
1087	93	24
1088	93	22
1089	93	22
1090	93	22
1091	93	23
1092	93	22
1093	93	22
1094	93	23
1095	93	23
1096	93	23
1097	93	22
1098	93	23
1099	93	23

Time(s)	Normalized speed (percent)	Normalized torque (percent)
1100	93	23
1101	93	25
1102	93	27
1103	93	26
1104	93	25
1105	93	27
1106	93	27
1107	93	27
1108	93	24
1109	93	20
1110	93	18
1111	93	17
1112	93	17
1113	93	18
1114	93	18
1115	93	18
1116	93	19
1117	93	22
1118	93	22
1119	93	19
1120	93	17
1121	93	17
1122	93	18
1123	93	18
1124	93	19
1125	93	19
1126	93	20
1127	93	19
1128	93	20
1129	93	25
1130	93	30
1131	93	31
1132	93	26
1133	93	21
1134	93	18
1135	93	20
1136	93	25
1137	93	24
1138	93	21
1139	93	21
1140	93	22
1141	93	22
1142	93	28
1143	93	29
1144	93	23
1145	93	21
1146	93	18
1147	93	16
1148	93	16
1149	93	16
1150	93	17
1151	93	17
1152	93	17
1153	93	17
1154	93	23
1155	93	26
1156	93	22
1157	93	18
1158	93	16
1159	93	16
1160	93	17
1161	93	19
1162	93	18
1163	93	16
1164	93	19
1165	93	22
1166	93	25
1167	93	29
1168	93	27
1169	93	22
1170	93	18
1171	93	16
1172	93	19
1173	93	19
1174	93	17
1175	93	17
1176	93	17
1177	93	16
1178	93	16
1179	93	15
1180	93	16
1181	93	15
1182	93	17
1183	93	21
1184	93	30
1185	93	53
1186	93	54
1187	93	38
1188	93	30
1189	93	24
1190	93	20
1191	95	20
1192	96	18
1193	96	15
1194	96	11
1195	95	9
1196	95	8
1197	96	7
1198	94	33
1199	93	46
1200	93	37
1201	16	8
1202	0	0
1203	0	0
1204	0	0
1205	0	0
1206	0	0
1207	0	0
1208	0	0
1209	0	0

PART 1051—CONTROL OF EMISSIONS FROM RECREATIONAL ENGINES AND VEHICLES

Subpart A—Determining How To Follow This Part

Sec.
1051.1 Does this part apply for my vehicles or engines?
1051.5 Which engines are excluded from this part's requirements?
1051.10 How is this part organized?
1051.15 Do any other regulation parts apply to me?
1051.20 May I certify a recreational engine instead of the vehicle?
1051.25 What requirements apply when installing certified engines in recreational vehicles?

Subpart B—Emission Standards and Related Requirements

1051.101 What emission standards and other requirements must my vehicles meet?
1051.103 What are the exhaust emission standards for snowmobiles?

1051.105 What are the exhaust emission standards for off-highway motorcycles?
1051.107 What are the exhaust emission standards for all-terrain vehicles (ATVs) and offroad utility vehicles?
1051.110 What evaporative emission standards must my vehicles meet?
1051.115 What other requirements must my vehicles meet?
1051.120 What emission-related warranty requirements apply to me?
1051.125 What maintenance instructions must I give to buyers?
1051.130 What installation instructions must I give to vehicle manufacturers?
1051.135 How must I label and identify the vehicles I produce?
1051.137 What are the consumer labeling requirements?
1051.145 What provisions apply only for a limited time?

Subpart C—Certifying Engine Families

1051.201 What are the general requirements for obtaining a certificate of conformity?
1051.205 What must I include in my application?
1051.210 May I get preliminary approval before I complete my application?
1051.220 How do I amend the maintenance instructions in my application?
1051.225 How do I amend my application for certification to include new or modified vehicles or to change an FEL?
1051.230 How do I select engine families?
1051.235 What emission testing must I perform for my application for a certificate of conformity?
1051.240 How do I demonstrate that my engine family complies with exhaust emission standards?
1051.243 How do I determine deterioration factors from exhaust durability testing?
1051.245 How do I demonstrate that my engine family complies with evaporative emission standards?
1051.250 What records must I keep and make available to EPA?
1051.255 What decisions may EPA make regarding my certificate of conformity?

Subpart D—Testing Production-Line Vehicles and Engines

1051.301 When must I test my production-line vehicles or engines?
1051.305 How must I prepare and test my production-line vehicles or engines?
1051.310 How must I select vehicles or engines for production-line testing?
1051.315 How do I know when my engine family fails the production-line testing requirements?
1051.320 What happens if one of my production-line vehicles or engines fails to meet emission standards?
1051.325 What happens if an engine family fails the production-line requirements?
1051.330 May I sell vehicles from an engine family with a suspended certificate of conformity?
1051.335 How do I ask EPA to reinstate my suspended certificate?
1051.340 When may EPA revoke my certificate under this subpart and how may I sell these vehicles again?
1051.345 What production-line testing records must I send to EPA?
1051.350 What records must I keep?

Subpart E—Testing In-Use Engines [Reserved]

Subpart F—Test Procedures

1051.501 What procedures must I use to test my vehicles or engines?
1051.505 What special provisions apply for testing snowmobiles?
1051.510 What special provisions apply for testing ATV engines? [Reserved]
1051.515 How do I test my fuel tank for permeation emissions?
1051.520 How do I perform exhaust durability testing?

Subpart G—Compliance Provisions

1051.601 What compliance provisions apply to vehicles and engines subject to this part?
1051.605 What provisions apply to engines already certified under the motor-vehicle program or the Large Spark-ignition program?
1051.610 What provisions apply to vehicles already certified under the motor-vehicle program?
1051.615 What are the special provisions for certifying small recreational engines?
1051.620 When may a manufacturer obtain an exemption for competition recreational vehicles?
1051.625 What special provisions apply to unique snowmobile designs for small-volume manufacturers?
1051.630 What special provisions apply to unique snowmobile designs for all manufacturers?
1051.635 What provisions apply to new manufacturers that are small businesses?
1051.640 What special provisions apply for custom off-highway motorcycles that are similar to highway motorcycles?
1051.645 What special provisions apply to branded engines?

Subpart H—Averaging, Banking, and Trading for Certification

1051.701 General provisions.
1051.705 How do I average emission levels?

1051.710 How do I generate and bank emission credits?
1051.715 How do I trade emission credits?
1051.720 How do I calculate my average emission level or emission credits?
1051.725 What must I include in my applications for certification?
1051.730 What ABT reports must I send to EPA?
1051.735 What records must I keep?
1051.740 Are there special averaging provisions for snowmobiles?
1051.745 What can happen if I do not comply with the provisions of this subpart?

Subpart I—Definitions and Other Reference Information

1051.801 What definitions apply to this part?
1051.805 What symbols, acronyms, and abbreviations does this part use?
1051.810 What materials does this part reference?
1051.815 What provisions apply to confidential information?
1051.820 How do I request a hearing?

AUTHORITY: 42 U.S.C. 7401–7671q.

SOURCE: 67 FR 68347, Nov. 8, 2002, unless otherwise noted.

Subpart A—Overview and Applicability

§ 1051.1 Does this part apply for my vehicles or engines?

(a) The regulations in this part 1051 apply for all the following new recreational vehicles or new engines used in the following recreational vehicles, except as provided in § 1051.5:

(1) Snowmobiles.

(2) Off-highway motorcycles.

(3) All-terrain vehicles (ATVs.)

(4) Offroad utility vehicles with engines with displacement less than or equal to 1000 cc, maximum engine power less than or equal to 30 kW, and maximum vehicle speed of 25 miles per hour or higher. Offroad utility vehicles that are subject to this part are subject to the same requirements as ATVs. This means that any requirement that applies to ATVs also applies to these offroad utility vehicles, without regard to whether the regulatory language mentions offroad utility vehicles.

(b) In certain cases, the regulations in this part 1051 apply to new engines under 50 cc used in motorcycles that are motor vehicles. See 40 CFR 86.447–2006 or 86.448–2006 for provisions related to this allowance.

(c) This part 1051 applies for new recreational vehicles starting in the 2006 model year, except as described in subpart B of this part. You need not follow this part for vehicles you produce before the 2006 model year, unless you certify voluntarily. See §§ 1051.103 through 1051.110, § 1051.145, and the definition of ''model year'' in § 1051.801 for more information about the timing of the requirements.

(d) The requirements of this part begin to apply when a vehicle is new. See the definition of ''new'' in § 1051.801 for more information. In some cases, vehicles or engines that have been previously used may be considered ''new'' for the purposes of this part.

(e) The evaporative emission requirements of this part apply to highway motorcycles, as specified in 40 CFR part 86, subpart E.

[70 FR 40486, July 13, 2005]

§ 1051.5 Which engines are excluded from this part's requirements?

(a) You may exclude vehicles with compression-ignition engines. See 40 CFR part 89 or 1039 for regulations that cover these engines.

(b) We may require you to label an engine or vehicle (or both) if this section excludes it and other requirements in this chapter do not apply.

[70 FR 40486, July 13, 2005]

§ 1051.10 How is this part organized?

The regulations in this part 1051 contain provisions that affect both vehicle manufacturers and others. However, the requirements of this part are generally addressed to the vehicle manufacturer. The term ''you'' generally means the vehicle manufacturer, as defined in § 1051.801. This part 1051 is divided into the following subparts:

(a) Subpart A of this part defines the applicability of part 1051 and gives an overview of regulatory requirements.

(b) Subpart B of this part describes the emission standards and other requirements that must be met to certify engines under this part. Note that § 1051.145 discusses certain interim requirements and compliance provisions that apply only for a limited time.

(c) Subpart C of this part describes how to apply for a certificate of conformity.

(d) Subpart D of this part describes general provisions for testing production-line engines.

(e) [Reserved]

(f) Subpart F of this part describes how to test your engines (including references to other parts of the Code of Federal Regulations).

(g) Subpart G of this part and 40 CFR part 1068 describe requirements, prohibitions, and other provisions that apply to engine manufacturers, equipment manufacturers, owners, operators, rebuilders, and all others.

(h) Subpart H of this part describes how you may generate and use emission credits to certify your engines.

(i) Subpart I of this part contains definitions and other reference information.

[70 FR 40486, July 13, 2005]

§ 1051.15 Do any other regulation parts apply to me?

(a) Parts 86 and 1065 of this chapter describe procedures and equipment specifications for testing vehicles and engines. Subpart F of this part 1051 describes how to apply the provisions of parts 86 and 1065 of this chapter to determine whether vehicles meet the emission standards in this part.

(b) The requirements and prohibitions of part 1068 of this chapter apply to everyone, including anyone who manufactures, imports, installs, owns, operates, or rebuilds any of the vehicles subject to this part 1051, or vehicles containing these engines. Part 1068 of this chapter describes general provisions, including these seven areas:

(1) Prohibited acts and penalties for manufacturers and others.

(2) Rebuilding and other aftermarket changes.

(3) Exclusions and exemptions for certain vehicles and engines.

(4) Importing vehicles and engines.

(5) Selective enforcement audits of your production.

(6) Defect reporting and recall.

(7) Procedures for hearings.

(c) Other parts of this chapter apply if referenced in this part.

[70 FR 40487, July 13, 2005]

§ 1051.20 May I certify a recreational engine instead of the vehicle?

(a) You may certify engines sold separately from vehicles in either of two cases:

(1) If you manufacture recreational engines but not recreational vehicles, you may ask to certify the engine alone. In your request, explain why you cannot certify the entire vehicle.

(2) If you manufacture complete recreational vehicles containing engines you also sell separately, you may ask to certify all these engines in a single engine family or in separate engine families.

(b) If you certify an engine under this section, you must use the test procedures in subpart F of this part. If the test procedures require vehicle testing, use good engineering judgment to install the engine in an appropriate vehicle for measuring emissions.

(c) If we allow you to certify recreational engines, the vehicles must meet the applicable emission standards (including evaporative emission standards) with the engines installed in the appropriate vehicles. You must prepare installation instructions as described in § 1051.130 and use good engineering judgment so that the engines will meet emission standards after proper installation in the vehicle.

(d) Identify and label engines you produce under this section consistent with the requirements of § 1051.135. On the emission control information label, identify the manufacturing date of the engine rather than the vehicle.

(e) You may not use the provisions of this section to circumvent or reduce the stringency of this part's standards or other requirements.

(f) If you certify under paragraph (a)(1) of this section, you may ask us to allow you to perform production-line testing on the engine. If you certify under paragraph (a)(2) of this section, use good engineering judgment to ensure that these engines are produced in the same manner as the engines you produce for your vehicles, so that your production-line testing results under subpart D of this part would apply to them.

§ 1051.25 What requirements apply when installing certified engines in recreational vehicles?

(a) If you manufacture recreational vehicles with engines certified under § 1051.20, you need not also certify the vehicle under this part. The vehicle must nevertheless meet emission standards with the engine installed.

(b) You must follow the engine manufacturer's emission-related installation instructions, as described in § 1051.135 and 40 CFR 1068.105. For example, you must use a fuel system that meets the permeation requirements of this part, consistent with the engine manufacturer's instructions.

(c) If you install the engine in a way that makes the engine's emission control information label hard to read during normal engine maintenance, you must place a duplicate label on the vehicle, as described in 40 CFR 1068.105.

Subpart B—Emission Standards and Related Requirements

§ 1051.101 What emission standards and other requirements must my vehicles meet?

(a) You must show that your vehicles meet the following:

(1) The applicable exhaust emission standards in § 1051.103, § 1051.105, § 1051.107, or § 1051.145.

(i) For snowmobiles, see § 1051.103.

(ii) For off-highway motorcycles, see § 1051.105.

(iii) For all-terrain vehicles and offroad utility vehicles subject to this part, see § 1051.107 and § 1051.145.

(2) The evaporative emission standards in § 1051.110.

(3) All the requirements in § 1051.115.

(b) The certification regulations in subpart C of this part describe how you make this showing.

(c) These standards and requirements apply to all testing, including certification, production-line, and in-use testing.

(d) Other sections in this subpart describe other requirements for manufacturers such as labeling or warranty requirements.

(e) It is important that you read § 1051.145 to determine if there are other interim requirements or interim compliance options that apply for a limited time.

(f) As described in § 1051.1(a)(4), offroad utility vehicles that are subject to this part are subject to the same requirements as ATVs.

[67 FR 68347, Nov. 8, 2002, as amended at 70 FR 40487, July 13, 2005]

§ 1051.103 What are the exhaust emission standards for snowmobiles?

(a) Apply the exhaust emission standards in this section by model year. Measure emissions with the snowmobile test procedures in subpart F of this part.

(1) Follow Table 1 of this section for exhaust emission standards. You may generate or use emission credits under the averaging, banking, and trading (ABT) program for $HC+NO_X$ and CO emissions, as described in subpart H of this part. This requires that you specify a family emission limit for each pollutant you include in the ABT program for each engine family. These family emission limits serve as the emission standards for the engine family with respect to all required testing instead of the standards specified in this section. An engine family meets emission standards even if its family emission limit is higher than the standard, as long as you show that the whole averaging set of applicable engine families meets the applicable emission standards using emission credits, and the vehicles within the family meet the family emission limit. The phase-in values specify the percentage of your U.S.-directed production that must comply with the emission standards for those model years. Calculate this compliance percentage based on a simple count of your U.S.-directed production units within each certified engine family compared with a simple count of your total U.S.-directed production units. Table 1 also shows the maximum value you may specify for a family emission limit, as follows:

TABLE 1 OF § 1051.103—EXHAUST EMISSION STANDARDS FOR SNOWMOBILES (G/KW-HR)

Phase	Model year	Phase-in (percent)	Emission standards			Maximum allowable family emission limits		
			HC	$HC+NO_X$	CO	HC	$HC+NO_X$	CO
Phase 1	2006	50	100		275			
Phase 1	2007–2009	100	100		275			
Phase 2	2010 and 2011	100	75		275			
Phase 3	2012 and later	100	75	(1)	(1)	150	165	400

1 See § 1051.103(a)(2).

(2) For Phase 3, the $HC+NO_X$ and CO standards are defined by a functional relationship. Choose your corporate average $HC+NO_X$ and CO standards for each model year according to the following criteria:

(i) Prior to production, select the $HC+NO_X$ standard and CO standard (specified as g/kW-hr) so that the combined percent reduction from baseline emission levels is greater than or equal to 100 percent; that is, that the standards comply with the following equation:

$$\left(1-\frac{(HC+NO_x)_{STD}-15}{150}\right)\times 100+\left(1-\frac{CO_{STD}}{400}\right)\times 100 \geq 100$$

(ii) Your corporate average $HC+NO_X$ standard may not be higher than 90 g/kW-hr.

(iii) Your corporate average CO standard may not be higher than 275 g/kW-hr.

(iv) You may use the averaging and banking provisions of subpart H of this part to show compliance with these $HC+NO_X$ and CO standards in this paragraph (a)(2). You may modify your selection of the $HC+NO_X$ and CO standards at the end of the model year under paragraph (a)(2)(i) of this section. You must comply with these final corporate average emission standards.

(b) The exhaust emission standards in this section apply for snowmobiles using the fuel type on which they are designed to operate. You must meet the numerical emission standards for hydrocarbons in this section based on the following types of hydrocarbon emissions for snowmobiles powered by the following fuels:

(1) Gasoline- and LPG-fueled snowmobiles: THC emissions.

(2) Natural gas-fueled snowmobiles: NMHC emissions.

(3) Alcohol-fueled snowmobiles: THCE emissions.

(c) Your snowmobiles must meet emission standards over their full useful life. The minimum useful life is 8,000 kilometers, 400 hours of engine operation, or five calendar years, whichever comes first. You must specify a longer useful life in terms of kilometers and hours for the engine family if the average service life of your vehicles is longer than the minimum value, as follows:

(1) Except as allowed by paragraph (c)(2) of this section, your useful life (in kilometers and hours) may not be less than either of the following:

(i) Your projected operating life from advertisements or other marketing materials for any vehicles in the engine family.

(ii) Your basic mechanical warranty for any engines in the engine family.

(2) Your useful life may be based on the average service life of vehicles in the engine family if you show that the average service life is less than the useful life required by paragraph (c)(1) of this section, but more than the minimum useful life (8,000 kilometers or

400 hours of engine operation). In determining the actual average service life of vehicles in an engine family, we will consider all available information and analyses. Survey data is allowed but not required to make this showing.

[67 FR 68347, Nov. 8, 2002, as amended at 70 FR 40487, July 13, 2005]

§ 1051.105 What are the exhaust emission standards for off-highway motorcycles?

(a) Apply the exhaust emission standards in this section by model year. Measure emissions with the off-highway motorcycle test procedures in subpart F of this part.

(1) Follow Table 1 of this section for exhaust emission standards. You may generate or use emission credits under the averaging, banking, and trading (ABT) program for $HC+NO_X$ and CO emissions, as described in subpart H of this part. This requires that you specify a family emission limit for each pollutant you include in the ABT program for each engine family. These family emission limits serve as the emission standards for the engine family with respect to all required testing instead of the standards specified in this section. An engine family meets emission standards even if its family emission limit is higher than the standard, as long as you show that the whole averaging set of applicable engine families meets the applicable emission standards using emission credits, and the vehicles within the family meet the family emission limit. The phase-in values specify the percentage of your U.S.-directed production that must comply with the emission standards for those model years. Calculate this compliance percentage based on a simple count of your U.S.-directed production units within each certified engine family compared with a simple count of your total U.S.-directed production units. Table 1 follows:

TABLE 1 OF § 1051.105—EXHAUST EMISSION STANDARDS FOR OFF-HIGHWAY MOTORCYCLES (G/KM)

Phase	Model year	Phase-in (percent)	Emission standards		Maximum allowable family emission limits	
			$HC+NO_X$	CO	$HC+NO_X$	CO
Phase 1	2006	50	2.0	25	20.0	50
	2007 and later	100	2.0	25	20.0	50

(2) For model years 2007 and later you may choose to certify all of your off-highway motorcycles to an $HC+NO_X$ standard of 4.0 g/km and a CO standard of 35 g/km, instead of the standards listed in paragraph (a)(1) of this section. To certify to the standards in this paragraph (a)(2), you must comply with the following provisions:

(i) You may not request an exemption for any off-highway motorcycles under § 1051.620

(ii) At least ten percent of your off-highway motorcycles for the model year must have four of the following features:

(A) The absence of a headlight or other lights.

(B) The absence of a spark arrestor.

(C) The absence of manufacturer warranty.

(D) Suspension travel greater than 10 inches.

(E) Engine displacement greater than 50 cc.

(F) The absence of a functional seat.

(iii) You may use the averaging and banking provisions of subpart H of this part to show compliance with this $HC+NO_X$ standard, but not this CO standard. If you use the averaging or banking provisions to show compliance, your FEL for $HC+NO_X$ may not exceed 8.0 g/km for any engine family. You may not use the trading provisions of subpart H of this part.

(3) You may certify off-highway motorcycles with engines that have total displacement of 70 cc or less to the exhaust emission standards in § 1051.615 instead of certifying them to the exhaust emission standards of this section. Count all such vehicles in the phase-in (percent) requirements of this section.

(b) The exhaust emission standards in this section apply for off-highway motorcycles using the fuel type on which they are designed to operate. You must meet the numerical emission standards for hydrocarbons in this section based on the following types of hydrocarbon emissions for off-highway motorcycles powered by the following fuels:

(1) Gasoline- and LPG-fueled off-highway motorcycles: THC emissions.

(2) Natural gas-fueled off-highway motorcycles: NMHC emissions.

(3) Alcohol-fueled off-highway motorcycles: THCE emissions.

(c) Your off-highway motorcycles must meet emission standards over their full useful life. For off-highway motorcycles with engines that have total displacement greater than 70 cc, the minimum useful life is 10,000 kilometers or five years, whichever comes first. For off-highway motorcycles with engines that have total displacement of 70 cc or less, the minimum useful life is 5,000 kilometers or five years, whichever comes first. You must specify a longer useful life for the engine family in terms of kilometers if the average service life of your vehicles is longer than the minimum value, as follows:

(1) Except as allowed by paragraph (c)(2) of this section, your useful life (in kilometers) may not be less than either of the following:

(i) Your projected operating life from advertisements or other marketing materials for any vehicles in the engine family.

(ii) Your basic mechanical warranty for any engines in the engine family.

(2) Your useful life may be based on the average service life of vehicles in the engine family if you show that the average service life is less than the useful life required by paragraph (c)(1) of this section, but more than the minimum useful life (10,000 kilometers). In determining the actual average service life of vehicles in an engine family, we will consider all available information and analyses. Survey data is allowed but not required to make this showing.

[67 FR 68347, Nov. 8, 2002, as amended at 70 FR 40487, July 13, 2005]

§ 1051.107 What are the exhaust emission standards for all-terrain vehicles (ATVs) and offroad utility vehicles?

This section specifies the exhaust emission standards that apply to ATVs. As is described in § 1051.1(a)(4), offroad utility vehicles that are subject to this part are subject to these same standards.

(a) Apply the exhaust emission standards in this section by model year. Measure emissions with the ATV test procedures in subpart F of this part.

(1) Follow Table 1 of this section for exhaust emission standards. You may generate or use emission credits under the averaging, banking, and trading (ABT) program for $HC+NO_x$ emissions, as described in subpart H of this part. This requires that you specify a family emission limit for each pollutant you include in the ABT program for each engine family. These family emission limits serve as the emission standards for the engine family with respect to all required testing instead of the standards specified in this section. An engine family meets emission standards even if its family emission limit is higher than the standard, as long as you show that the whole averaging set of applicable engine families meets the applicable emission standards using emission credits, and the vehicles within the family meet the family emission limit. Table 1 also shows the maximum value you may specify for a family emission limit. The phase-in values in the table specify the percentage of your total U.S.-directed production that must comply with the emission standards for those model years.

Calculate this compliance percentage based on a simple count of your U.S.-directed production units within each certified engine family compared with a simple count of your total U.S.-directed production units. This applies to your total production of ATVs and offroad utility vehicles that are subject to the standards of this part; including both ATVs and offroad utility vehicles subject to the standards of this section and ATVs and offroad utility vehicles certified to the standards of other sections in this part 1051 (such as § 1051.615, but not including vehicles certified under other parts in this

chapter (such as 40 CFR part 90). Table 1 follows:

TABLE 1 OF § 1051.107—EXHAUST EMISSION STANDARDS FOR ATVS (G/KM)

Phase	Model year	Phase-in (percent)	Emission standards		Maximum allowable family emission limits	
			$HC+NO_X$	CO	$HC+NO_X$	CO
Phase 1	2006	50	1.5	35	20.0	
	2007 and later	100	1.5	35	20.0	

(2) You may certify ATVs with engines that have total displacement of less than 100 cc to the exhaust emission standards in § 1051.615 instead of certifying them to the exhaust emission standards of this section. Count all such vehicles in the phase-in (percent) requirements of this section.

(b) The exhaust emission standards in this section apply for ATVs using the fuel type on which they are designed to operate. You must meet the numerical emission standards for hydrocarbons in this section based on the following types of hydrocarbon emissions for ATVs powered by the following fuels:

(1) Gasoline- and LPG-fueled ATVs: THC emissions.

(2) Natural gas-fueled ATVs: NMHC emissions.

(3) Alcohol-fueled ATVs: THCE emissions.

(c) Your ATVs must meet emission standards over their full useful life. For ATVs with engines that have total displacement of 100 cc or greater, the minimum useful life is 10,000 kilometers, 1000 hours of engine operation, or five years, whichever comes first. For ATVs with engines that have total displacement of less than 100 cc, the minimum useful life is 5,000 kilometers, 500 hours of engine operation, or five years, whichever comes first. You must specify a longer useful life for the engine family in terms of kilometers and hours if the average service life of your vehicles is longer than the minimum value, as follows:

(1) Except as allowed by paragraph (c)(2) of this section, your useful life (in kilometers) may not be less than either of the following:

(i) Your projected operating life from advertisements or other marketing materials for any vehicles in the engine family.

(ii) Your basic mechanical warranty for any engines in the engine family.

(2) Your useful life may be based on the average service life of vehicles in the engine family if you show that the average service life is less than the useful life required by paragraph (c)(1) of this section, but more than the minimum useful life (10,000 kilometers or 1,000 hours of engine operation). In determining the actual average service life of vehicles in an engine family, we will consider all available information and analyses. Survey data is allowed but not required to make this showing.

[67 FR 68347, Nov. 8, 2002, as amended at 70 FR 40488, July 13, 2005]

§ 1051.110 What evaporative emission standards must my vehicles meet?

Your new vehicles must meet the emission standards of this section over their full useful life. Note that § 1051.245 allows you to use design-based certification instead of generating new emission data.

(a) Beginning with the 2008 model year, permeation emissions from your vehicle's fuel tank(s) may not exceed 1.5 grams per square-meter per day when measured with the test procedures for tank permeation in subpart F of this part. You may generate or use emission credits under the averaging, banking, and trading (ABT) program, as described in subpart H of this part.

(b) Beginning with the 2008 model year, permeation emissions from your vehicle's fuel lines may not exceed 15 grams per square-meter per day when measured with the test procedures for fuel-line permeation in subpart F of this part. Use the inside diameter of

the hose to determine the surface area of the hose.

[67 FR 68347, Nov. 8, 2002, as amended at 70 FR 40488, July 13, 2005]

§ 1051.115 What other requirements must my vehicles meet?

Your vehicles must meet the following requirements:

(a) *Closed crankcase.* Crankcase emissions may not be discharged directly into the ambient atmosphere from any vehicle throughout its useful life.

(b) [Reserved]

(c) *Adjustable parameters.* Vehicles that have adjustable parameters must meet all the requirements of this part for any adjustment in the physically adjustable range. Note that parameters that control the air-fuel ratio may be treated separately under paragraph (d) of this section. An operating parameter is not considered adjustable if you permanently seal it or if it is not normally accessible using ordinary tools. We may require that you set adjustable parameters to any specification within the adjustable range during any testing, including certification testing, production-line testing, or in-use testing.

(d) *Other adjustments.* This provision applies if an experienced mechanic can change your engine's air-fuel ratio in less than one hour with a few parts whose total cost is under $50 (in 2001 dollars). Examples include carburetor jets and needles. In the case of carburetor jets and needles, your vehicle must meet all the requirements of this part for any air-fuel ratio within the adjustable range described in paragraph (d)(1) of this section.

(1) In your application for certification, specify the adjustable range of air-fuel ratios you expect to occur in use. You may specify it in terms of engine parts (such as the carburetor jet size and needle configuration as a function of atmospheric conditions).

(2) This adjustable range (specified in paragraph (d)(1) of this section) must include all air-fuel ratios between the lean limit and the rich limit, unless you can show that some air-fuel ratios will not occur in use.

(i) The lean limit is the air-fuel ratio that produces the highest engine power output (averaged over the test cycle).

(ii) The rich limit is the richest of the following air-fuel ratios:

(A) The air-fuel ratio that would result from operating the vehicle as you produce it at the specified test conditions. This paragraph (d)(2)(ii)(A) does not apply if you produce the vehicle with an unjetted carburetor so that the vehicle must be jetted by the dealer or operator.

(B) The air-fuel ratio of the engine when you do durability testing.

(C) The richest air-fuel ratio that you recommend to your customers for the applicable ambient conditions.

(3) If the air-fuel ratio of your vehicle is adjusted primarily by changing the carburetor jet size and/or needle configuration, you may submit your recommended jetting chart instead of the range of air-fuel ratios required by paragraph (d)(1) of this section if the following criteria are met:

(i) Good engineering judgment indicates that vehicle operators would not have an incentive to operate the vehicle with richer air-fuel ratios than recommended.

(ii) The chart is based on use of a fuel that is equivalent to the specified test fuel(s). As an alternative you may submit a chart based on a representative in-use fuel if you also provide instructions for converting the chart to be applicable to the test fuel(s).

(iii) The chart is specified in units that are adequate to make it practical for an operator to keep the vehicle properly jetted during typical use. For example, charts that specify jet sizes based on increments of temperature smaller than 20 °F (11.1 °C) or increments of altitude less than 2000 feet would not meet this criteria. Temperature ranges must overlap by at least 5 °F (2.8 °C).

(iv) You follow the jetting chart for durability testing.

(v) You do not produce your vehicles with jetting richer than the jetting chart recommendation for the intended vehicle use.

(vi) The adjustable range of carburetor screws, such as air screw, fuel screw, and idle-speed screw must be defined by stops, limits, or specification on the jetting chart consistent with the requirements for specifying jet

sizes and needle configuration in this section.

(4) We may require you to adjust the engine to any specification within the adjustable range during certification testing, production-line testing, selective enforcement auditing, or in-use testing. If we allow you to submit your recommended jetting chart instead of the range of air-fuel ratios required by paragraph (d)(1) of this section, adjust the engine to the richest specification within the jetting chart for the test conditions, unless we specify a leaner setting. We may not specify a setting leaner than that described in paragraph (d)(2)(i) of this section.

(e) *Prohibited controls.* You may not design your engines with emission-control devices, systems, or elements of design that cause or contribute to an unreasonable risk to public health, welfare, or safety while operating. For example, this would apply if the engine emits a noxious or toxic substance it would otherwise not emit that contributes to such an unreasonable risk.

(f) *Defeat devices.* You may not equip your vehicles with a defeat device. A defeat device is an auxiliary emission-control device that reduces the effectiveness of emission controls under conditions that the vehicle may reasonably be expected to encounter during normal operation and use. This does not apply to auxiliary emission-control devices you identify in your certification application if any of the following is true:

(1) The conditions of concern were substantially included in the applicable test procedures described in subpart F of this part.

(2) You show your design is necessary to prevent vehicle damage or accidents.

(3) The reduced effectiveness applies only to starting the engine.

(g) *Noise standards.* There are no noise standards specified in this part 1051. See 40 CFR Chapter I, Subchapter G, to determine if your vehicle must meet noise emission standards under another part of our regulations.

[67 FR 68347, Nov. 8, 2002, as amended at 70 FR 40488, July 13, 2005]

§ 1051.120 What emission-related warranty requirements apply to me?

(a) *General requirements.* You must warrant to the ultimate purchaser and each subsequent purchaser that the new engine, including all parts of its emission-control system, meets two conditions:

(1) It is designed, built, and equipped so it conforms at the time of sale to the ultimate purchaser with the requirements of this part.

(2) It is free from defects in materials and workmanship that may keep it from meeting these requirements.

(b) *Warranty period.* Your emission-related warranty must be valid for at least 50 percent of the vehicle's minimum useful life in kilometers or hours of engine operation (where applicable), or at least 30 months, whichever comes first. You may offer an emission-related warranty more generous than we require. The emission-related warranty for the engine may not be shorter than any published warranty you offer without charge for the engine. Similarly, the emission-related warranty for any component may not be shorter than any published warranty you offer without charge for that component. If a vehicle has no odometer, base warranty periods in this paragraph (b) only on the vehicle's age (in years). The warranty period begins when the engine is placed into service.

(c) *Components covered.* The emission-related warranty covers all components whose failure would increase an engine's emissions of any pollutant. This includes components listed in 40 CFR part 1068, Appendix I, and components from any other system you develop to control emissions. The emission-related warranty covers these components even if another company produces the component. Your emission-related warranty does not cover components whose failure would not increase an engine's emissions of any pollutant.

(d) *Limited applicability.* You may deny warranty claims under this section if the operator caused the problem through improper maintenance or use, as described in 40 CFR 1068.115. You may ask us to allow you to exclude from your emission-related warranty certified vehicles that have been used

significantly for competition, especially certified motorcycles that meet at least four of the criteria in § 1051.620(b)(1).

(e) *Owners manual.* Describe in the owners manual the emission-related warranty provisions from this section that apply to the engine.

[70 FR 40489, July 13, 2005]

§ 1051.125 What maintenance instructions must I give to buyers?

Give the ultimate purchaser of each new vehicle written instructions for properly maintaining and using the vehicle, including the emission-control system. The maintenance instructions also apply to service accumulation on your emission-data vehicles, as described in § 1051.240, § 1051.245, and 40 CFR part 1065.

(a) *Critical emission-related maintenance.* Critical emission-related maintenance includes any adjustment, cleaning, repair, or replacement of critical emission-related components. This may also include additional emission-related maintenance that you determine is critical if we approve it in advance. You may schedule critical emission-related maintenance on these components if you meet the following conditions:

(1) You demonstrate that the maintenance is reasonably likely to be done at the recommended intervals on in-use vehicles. We will accept scheduled maintenance as reasonably likely to occur if you satisfy any of the following conditions:

(i) You present data showing that, if a lack of maintenance increases emissions, it also unacceptably degrades the vehicle's performance.

(ii) You present survey data showing that at least 80 percent of vehicles in the field get the maintenance you specify at the recommended intervals.

(iii) You provide the maintenance free of charge and clearly say so in maintenance instructions for the customer.

(iv) You otherwise show us that the maintenance is reasonably likely to be done at the recommended intervals.

(2) You may not schedule critical emission-related maintenance within the minimum useful life period for aftertreatment devices, pulse-air valves, fuel injectors, oxygen sensors, electronic control units, superchargers, or turbochargers.

(b) *Recommended additional maintenance.* You may recommend any additional amount of maintenance on the components listed in paragraph (a) of this section, as long as you state clearly that these maintenance steps are not necessary to keep the emission-related warranty valid. If operators do the maintenance specified in paragraph (a) of this section, but not the recommended additional maintenance, this does not allow you to disqualify those vehicles from in-use testing or deny a warranty claim. Do not take these maintenance steps during service accumulation on your emission-data vehicles.

(c) *Special maintenance.* You may specify more frequent maintenance to address problems related to special situations, such as atypical vehicle operation. You must clearly state that this additional maintenance is associated with the special situation you are addressing.

(d) *Noncritical emission-related maintenance.* You may schedule any amount of emission-related inspection or maintenance that is not covered by paragraph (a) of this section, as long as you state in the owners manual that these steps are not necessary to keep the emission-related warranty valid. If operators fail to do this maintenance, this does not allow you to disqualify those vehicles from in-use testing or deny a warranty claim. Do not take these inspection or maintenance steps during service accumulation on your emission-data vehicles.

(e) *Maintenance that is not emission-related.* For maintenance unrelated to emission controls, you may schedule any amount of inspection or maintenance. You may also take these inspection or maintenance steps during service accumulation on your emission-data vehicles, as long as they are reasonable and technologically necessary. This might include adding engine oil, changing air, fuel, or oil filters, servicing engine-cooling systems, and adjusting idle speed, governor, engine bolt torque, valve lash, or injector lash, or adjusting chain tension, clutch

position, or tire pressure. You may perform this nonemission-related maintenance on emission-data vehicles at the least frequent intervals that you recommend to the ultimate purchaser (but not the intervals recommended for severe service). You may also visually inspect test vehicles or engines, including emission-related components, as needed to ensure safe operation.

(f) *Source of parts and repairs.* State clearly on the first page of your written maintenance instructions that a repair shop or person of the owner's choosing may maintain, replace, or repair emission-control devices and systems. Your instructions may not require components or service identified by brand, trade, or corporate name. Also, do not directly or indirectly condition your warranty on a requirement that the vehicle be serviced by your franchised dealers or any other service establishments with which you have a commercial relationship. You may disregard the requirements in this paragraph (f) if you do one of two things:

(1) Provide a component or service without charge under the purchase agreement.

(2) Get us to waive this prohibition in the public's interest by convincing us the vehicle will work properly only with the identified component or service.

(g) *Payment for scheduled maintenance.* Owners are responsible for properly maintaining their vehicles. This generally includes paying for scheduled maintenance. However, manufacturers must pay for scheduled maintenance during the useful life if it meets all the following criteria:

(1) Each affected component was not in general use on similar vehicles before the 2006 model year.

(2) The primary function of each affected component is to reduce emissions.

(3) The cost of the scheduled maintenance is more than 2 percent of the price of the vehicle.

(4) Failure to perform the maintenance would not cause clear problems that would significantly degrade the vehicle's performance.

(h) *Owners manual.* Explain the owner's responsibility for proper maintenance in the owners manual.

[70 FR 40489, July 13, 2005]

§ 1051.130 What installation instructions must I give to vehicle manufacturers?

(a) If you sell an engine for someone else to install in a piece of nonroad equipment, give the engine installer instructions for installing it consistent with the requirements of this part. Include all information necessary to ensure that an engine will be installed in its certified configuration.

(b) Make sure these instructions have the following information:

(1) Include the heading: ''Emission-related installation instructions''.

(2) State: ''Failing to follow these instructions when installing a certified engine in a piece of nonroad equipment violates federal law (40 CFR 1068.105(b)), subject to fines or other penalties as described in the Clean Air Act.''.

(3) Describe the instructions needed to properly install the exhaust system and any other components. Include instructions consistent with the requirements of § 1051.205(r).

(4) Describe the steps needed to comply with the evaporative emission standards in § 1051.110.

(5) Describe any limits on the range of applications needed to ensure that the engine operates consistently with your application for certification. For example, if your engines are certified only to the snowmobile standards, tell vehicle manufacturers not to install the engines in other vehicles.

(6) Describe any other instructions to make sure the installed engine will operate according to design specifications in your application for certification. This may include, for example, instructions for installing aftertreatment devices when installing the engines.

(7) State: ''If you install the engine in a way that makes the engine's emission contro information label hard to read during normal engine maintenance, you must place a duplicate label on the vehicle, as described in 40 CFR 1068.105.''.

(c) You do not need installation instructions for engines you install in your own vehicles.

(d) Provide instructions in writing or in an equivalent format. For example, you may post instructions on a publicly available Web site for downloading or printing. If you do not provide the instructions in writing, explain in your application for certification how you will ensure that each installer is informed of the installation requirements.

[70 FR 40490, July 13, 2005]

§ 1051.135 How must I label and identify the vehicles I produce?

Each of your vehicles must have three labels: a vehicle identification number as described in paragraph (a) of this section, an emission control information label as described in paragraphs (b) through (e) of this section, and a consumer information label as described in § 1051.137.

(a) Assign each vehicle a unique identification number and permanently affix, engrave, or stamp it on the vehicle in a legible way.

(b) At the time of manufacture, affix a permanent and legible emission control information label identifying each vehicle. The label must be

(1) Attached so it is not removable without being destroyed or defaced.

(2) Secured to a part of the vehicle (or engine) needed for normal operation and not normally requiring replacement.

(3) Durable and readable for the vehicle's entire life.

(4) Written in English.

(c) The label must—

(1) Include the heading ''EMISSION CONTROL INFORMATION''.

(2) Include your full corporate name and trademark. You may identify another company and use its trademark instead of yours if you comply with the provisions of § 1051.645.

(3) Include EPA's standardized designation for engine families, as described in § 1051.230.

(4) State the engine's displacement (in liters). You may omit this from the emission control information label if the vehicle is permanently labeled with a unique model name that corresponds to a specific displacement. Also, you may omit displacement from the label if all the engines in the engine family have the same per-cylinder displacement and total displacement.

(5) State: ''THIS VEHICLE IS CERTIFIED TO OPERATE ON [specify operating fuel or fuels].''.

(6) State the date of manufacture [MONTH and YEAR]. You may omit this from the label if you keep a record of the engine-manufacture dates and provide it to us upon request, or if you stamp the date on the engine or vehicle.

(7) State the exhaust emission standards or FELs to which the vehicles are certified.

(8) Identify the emission-control system. Use terms and abbreviations consistent with SAE J1930 (incorporated by reference in § 1051.810). You may omit this information from the label if there is not enough room for it and you put it in the owners manual instead.

(9) List specifications and adjustments for engine tuneups; show the proper position for the transmission during tuneup and state which accessories should be operating.

(10) Identify the fuel type and any requirements for fuel and lubricants. You may omit this information from the label if there is not enough room for it and you put it in the owners manual instead.

(11) State the useful life for your engine family if it is different than the minimum value.

(12) State: ''S VEHICLE MEETS U.S. EPA REGULATIONS FOR [MODEL YEAR] [SNOWMOBILES or OFF-ROAD MOTORCYCLES or ATVs or OFFROAD UTILITY VEHICLES].''.

(d) You may add information to the emission control information label to identify other emission standards that the vehicle meets or does not meet (such as California standards). You may also add other information to ensure that the engine will be properly maintained and used.

(e) You may ask us to approve modified labeling requirements in this part 1051 if you show that it is necessary or appropriate. We will approve your request if your alternate label is consistent with the requirements of this part.

(f) If you obscure the engine label while installing the engine in the equipment such that the label will be hard to read during normal maintenance, you must place a duplicate label on the equipment. If others install your engine in their equipment in a way that obscures the engine label, we require them to add a duplicate label on the equipment (see 40 CFR 1068.105); in that case, give them the number of duplicate labels they request and keep the following records for at least five years:

(1) Written documentation of the request from the equipment manufacturer.

(2) The number of duplicate labels you send and the date you sent them.

(g) Label every vehicle certified under this part with a removable hang-tag showing its emission characteristics relative to other models, as described in § 1051.137.

[70 FR 40490, July 13, 2005]

§ 1051.137 What are the consumer labeling requirements?

Label every vehicle certified under this part with a removable hang-tag showing its emission characteristics relative to other models. The label should be attached securely to the vehicle before it is offered for sale in such a manner that it would not be accidentally removed prior to sale. Use the applicable equations of this section to determine the normalized emission rate (NER) from the FEL for your vehicle. If the vehicle is certified without using the averaging provisions of subpart H, use the final deteriorated emission level. Round the resulting normalized emission rate for your vehicle to one decimal place. If the calculated NER value is less than zero, consider NER to be zero for that vehicle. We may specify a standardized format for labels. At a minimum, the tag should include: the manufacturer's name, vehicle model name, engine description (500 cc two-stroke with DFI), the NER, and a brief explanation of the scale (for example, note that 0 is the cleanest and 10 is the least clean).

(a) For snowmobiles, use the following equation:

$$NER = 16.61 \times \log (2.667 \times HC + CO) - 38.22$$

Where:

HC and CO are the cycle-weighted FELs (or emission rates) for hydrocarbons and carbon monoxide in g/kW-hr.

(b) For off-highway motorcycles, use the following equations:

(1) For off-highway motorcycles certified to the standards in § 1051.105, use one of the equations specified below.

(i) If the vehicle has HC + NO_X emissions less than or equal to 2.0 g/km, use the following equation:

$$NER = 2.500 \times (HC+NO_X)$$

Where:

$HC+NO_X$ is the FEL (or the sum of the cycle-weighted emission rates) for hydrocarbons and oxides of nitrogen in g/km.

(ii) If the vehicle has HC + NO_X emissions greater than 2.0 g/km, use the following equation:

$$NER = 5.000 \times \log(HC+NO_X) + 3.495$$

Where:

$HC+NO_X$ is the FEL (or the sum of the cycle-weighted emission rates) for hydrocarbons and oxides of nitrogen in g/km.

(2) For off-highway motorcycles certified to the standards in § 1051.615(b), use the following equation:

$$NER = 8.782 \times \log(HC+NO_X) - 5.598$$

Where:

$HC+NO_X$ is the FEL (or the sum of the cycle-weighted emission rates) for hydrocarbons and oxides of nitrogen in g/kW-hr.

(c) For ATVs, use the following equations:

(1) For ATVs certified to the standards in § 1051.107, use one of the equations specified below.

(i) If the vehicle has HC + NO_X emissions less than or equal to 1.5 g/km, use the following equation:

$$NER = 3.333 \times (HC+NO_X)$$

Where:

$HC+NO_X$ is the FEL (or the sum of the cycle-weighted emission rates) for hydrocarbons and oxides of nitrogen in g/km.

(ii) If the vehicle has HC + NO_X emissions greater than 1.5 g/km, use the following equation:

$$NER = 4.444 \times \log(HC+NO_X) + 4.217$$

Where:

$HC+NO_X$ is the FEL (or the sum of the cycle-weighted emission rates) for hydrocarbons and oxides of nitrogen in g/km.

(2) For ATVs certified to the standards in § 1051.615(a), use the following equation:

$$NER = 8.782 \times \log(HC + NO_X) - 7.277$$

Where:

$HC+NO_X$ is the FEL (or the sum of the cycle-weighted emission rates) for hydrocarbons and oxides of nitrogen in g/kW-hr.

[70 FR 40491, July 13, 2005]

§ 1051.145 What provisions apply only for a limited time?

Apply the following provisions instead of others in this part for the periods and circumstances specified in this section.

(a) *Provisions for small-volume manufacturers.* Special provisions apply to you if you are a small-volume manufacturer subject to the requirements of this part. Contact us before 2006 if you intend to use these provisions.

(1) You may delay complying with otherwise applicable emission standards (and other requirements) for two model years.

(2) If you are a small-volume manufacturer of snowmobiles, only 50 percent of the models you produce (instead of all of the models you produce) must meet emission standards in the first two years they apply to you as a small-volume manufacturer, as described in paragraph (a)(1) of this section. For example, this alternate phase-in allowance would allow small-volume snowmobile manufacturers to comply with the Phase 1 exhaust standards by certifying 50 percent of their snowmobiles in 2008, 50 percent of their snowmobiles in 2009, and 100 percent in 2010.

(3) Your vehicles for model years before 2011 may be exempt from the exhaust standards of this part if you meet the following criteria:

(i) Produce your vehicles by installing engines covered by a valid certificate of conformity under 40 CFR part 90 that shows the engines meet standards for Class II engines for each engine's model year.

(ii) Do not change the engine in a way that we could reasonably expect to increase its exhaust emissions.

(iii) The engine meets all applicable requirements from 40 CFR part 90. This applies to engine manufacturers, vehicle manufacturers who use these engines, and all other persons as if these engines were not used in recreational vehicles.

(iv) Show that fewer than 50 percent of the engine family's total sales in the United States are used in recreational vehicles regulated under this part. This includes engines used in any application, without regard to which company manufactures the vehicle or equipment.

(v) If your engines do not meet the criteria listed in paragraph (a) of this section, they will be subject to the provisions of this part. Introducing these engines into commerce without a valid exemption or certificate of conformity violates the prohibitions in 40 CFR 1068.101.

(vi) Engines exempted under this paragraph (a)(3) are subject to all the requirements affecting engines under 40 CFR part 90. The requirements and restrictions of 40 CFR part 90 apply to anyone manufacturing these engines, anyone manufacturing equipment that uses these engines, and all other persons in the same manner as other engines subject to 40 CFR part 90.

(4) All vehicles produced under this paragraph (a) must be labeled according to our specifications. The label must include the following:

(i) The heading ''EMISSION CONTROL INFORMATION''.

(ii) Your full corporate name and trademark.

(iii) A description of the provisions under which this section applies to your vehicle .

(iv) Other information that we specify to you in writing.

(b) *Optional emission standards for ATVs.* To meet ATV standards for model years before 2014, you may apply the exhaust emission standards by model year in paragraph (b)(1) of this section while measuring emissions using the engine-based test procedures in 40 CFR part 1065 instead of the chassis-based test procedures in 40 CFR part 86. In model year 2014 you may apply this provision for exhaust emission engine families representing up to 50 percent of your U.S.-directed production. This provision is not available in the 2015 or later-model years. If you certify only one ATV exhaust emission engine family in the 2014 model year this provision is available for that family in the 2014 model year.

(1) Follow Table 1 of this section for exhaust emission standards, while meeting all the other requirements of § 1051.107. You may use emission credits to show compliance with these standards (see subpart H of this part). You may not exchange emission credits with engine families meeting the standards in § 1051.107(a). You may also not exchange credits between engine families certified to the standards for engines above 225 cc and engine families certified to the standards for engines below 225 cc. The phase-in percentages in the table specify the percentage of your total U.S.-directed production that must comply with the emission standards for those model years (i.e., the percentage requirement does not apply separately for engine families above and below 225 cc). Table 1 follows:

TABLE 1 OF § 1051.145—OPTIONAL EXHAUST EMISSION STANDARDS FOR ATVS (G/KW-HR)

Engine displacement	Model year	Phase-in (percent)	Emission standards		Maximum allowable family emission limits
			$HC+NO_X$	CO	$HC+NO_X$
<225 cc	2006	50	16.1	400	32.2
	2007 and 2008	100	16.1	400	32.2
≥225 cc	2006	50	13.4	400	26.8
	2007 and 2008	100	13.4	400	26.8

(2) Measure emissions by testing the engine on a dynamometer with the steady-state duty cycle described in Table 2 of this section.

(i) During idle mode, hold the speed within your specifications, keep the throttle fully closed, and keep engine torque under 5 percent of the peak torque value at maximum test speed.

(ii) For the full-load operating mode, operate the engine at its maximum fueling rate.

(iii) See part 1065 of this chapter for detailed specifications of tolerances and calculations.

(iv) Table 2 follows:

TABLE 2 OF § 1051.145—6-MODE DUTY CYCLE FOR RECREATIONAL ENGINES

Mode No.	Engine speed (percent of maximum test speed)	Torque (percent of maximum test torque at test speed)	Minimum time in mode (minutes)	Weighting factors
1	85	100	5.0	0.09
2	85	75	5.0	0.20
3	85	50	5.0	0.29
4	85	25	5.0	0.30
5	85	10	5.0	0.07
6	Idle	0	5.0	0.05

(3) For ATVs certified to the standards in this paragraph (b), use the following equations to determine the normalized emission rate required by § 1051.137:

(i) For engines at or above 225 cc, use the following equation:

$$NER = 9.898 \times \log (HC + NO_X) - 4.898$$

Where:

$HC + NO_X$ is the sum of the cycle-weighted emission rates for hydrocarbons and oxides of nitrogen in g/kW-hr.

(ii) For engines below 225 cc, use the following equation:

$$NER = 9.898 \times \log [(HC+NO_X)\ 0.83] - 4.898$$

Where:

$HC + NO_X$ is the sum of the cycle-weighted emission rates for hydrocarbons and oxides of nitrogen in g/kW-hr.

(c) [Reserved]

(d) *Phase-in flexibility.* For model years before 2014, if you make a good faith effort to comply, but fail to meet the sales requirements of this part during a phase-in period for new standards, or fail to meet the average emission standards, we may approve an alternative remedy to offset the emission reduction deficit using future emission credits under this part. To apply for this, you must:

(1) Submit a plan during the certification process for the first model year of the phase-in showing how you project to meet the sales requirement of the phase-in.

(2) Notify us less than 30 days after you determine that you are likely to fail to comply with the sales requirement of the phase-in.

(3) Propose a remedy that will achieve equivalent or greater emission reductions compared to the specified phase-in requirements, and that will offset the deficit within one model year.

(e) *Raw sampling procedures.* Using good engineering judgment, you may use the alternate raw-sampling procedures instead of the procedures described in 40 CFR part 1065 for emission testing certain vehicles, as follows:

(1) *Snowmobile.* You may use the raw sampling procedures described in 40 CFR part 90 or 91 for snowmobiles before the 2010 model year.

(2) *ATV.* You may use the raw sampling procedures described in 40 CFR part 90 or 91 for ATVs certified using engine-based test procedures as specified in §1051.615 before the 2015 model year. You may use these raw sampling procedures for any ATVs certified using engine-based test procedures as specified in paragraph (b) of this section.

(f) *Early credits.* Snowmobile manufacturers may generate early emission credits in one of the following ways, by certifying some or all of their snowmobiles prior to 2006. Credit generating snowmobiles must meet all other applicable requirements of this part. No early credits may be generated by off-highway motorcycles or ATVs.

(1) You may certify one or more snowmobile engine families to FELs (HC and CO) below the numerical level of the Phase 2 standards prior to the date when compliance with the Phase 1 standard is otherwise required. Credits are calculated relative to the Phase 2 standards. Credits generated under this paragraph (f)(1) may be used at any time before 2012.

(2) You may certify a snowmobile engine family to FELs (HC and CO) below the numerical level of the Phase 1 standards prior to the date when compliance with the Phase 1 standard is otherwise required. Credits are calculated relative to the Phase 1 standards. Credits generated under this paragraph (f)(2) may only be used for compliance with the Phase 1 standards. You may generate credits under this paragraph (f)(2) without regard to whether the FELs are above or below the numerical level of the Phase 2 standards.

(g) *Pull-ahead option for permeation emissions.* Manufacturers choosing to comply with an early tank permeation standard of 3.0 g/m^2/day prior to model year 2008 may be allowed to delay compliance with the 1.5 g/m^2/day standard by earning credits, as follows:

(1) Calculate earned credits using the following equation:

$$\text{Credit} = (\text{Baseline emissions} - \text{Pull-ahead level}) \times \left[\Sigma_i(\text{Production})_i \times (UL)_i\right]$$

Where:

Baseline emissions = the baseline emission rate, as determined in paragraph (g)(2) of this section.

Pull-ahead level = the permeation level to which you certify the tank, which must be at or below 3.0 g/m^2/day.

$(\text{Production})_i$ = the annual production volume of vehicles in the engine family for model year ''i'' times the average internal surface area of the vehicles' fuel tanks.

$(UL)_i$ = The useful life of the engine family in model year ''i''.

(2) Determine the baseline emission level for calculating credits using any of the following values:

(i) 7.6 g/m^2/day.

(ii) The emission rate measured from your lowest-emitting, uncontrolled fuel tank from the current or previous

model year using the procedures in § 1051.515. For example, this would generally involve the fuel tank with the greatest wall thickness for a given material.

(iii) The emission rate measured from an uncontrolled fuel tank that is the same as or most similar to the model you have used during the current or previous model year. However, you may use this approach only if you use it to establish a baseline emission level for each unique tank model you produce using the procedures in § 1051.515.

(3) Pull-ahead tanks under this option must be certified and must meet all applicable requirements other than those limited to compliance with the exhaust standards.

(4) You may use credits generated under this paragraph (g) as specified in subpart H of this part.

(h) *Deficit credits for permeation standards.* For 2008 through 2010 model years, you may have a negative balance of emission credits relative to the permeation emission standards at the end of each model year, subject to the following provisions:

(1) You must eliminate any credit deficit we allow under this paragraph (h) by the end of the 2011 model year. If you are unable to eliminate your credit deficit by the end of the 2011 model year, we may void the certificates for all families certified to FELs above the allowable average, for all affected model years.

(2) State in your application for certification a statement whether you will have a negative balance of permeation emission credits for that model year. If you project that you will have a negative balance, estimate the credit deficit for each affected model year and present a detailed plan to show where and when you will get credits to offset the deficit by the end of the 2011 model year.

(3) In your end-of-year report under § 1051.730, state whether your credit deficit is larger or smaller than you projected in your application for certification. If the deficit is larger than projected, include in your end-of-year report an update to your detailed plan to show how you will eliminate the credit deficit by the end of the 2011 model year.

[67 FR 68347, Nov. 8, 2002, as amended at 70 FR 40491, July 13, 2005; 72 FR 20735, Apr. 26, 2007]

Subpart C—Certifying Engine Families

§ 1051.201 What are the general requirements for obtaining a certificate of conformity?

(a) You must send us a separate application for a certificate of conformity for each engine family. A certificate of conformity is valid from the indicated effective date until December 31 of the model year for which it is issued.

(b) The application must contain all the information required by this part and must not include false or incomplete statements or information (see § 1051.255).

(c) We may ask you to include less information than we specify in this subpart, as long as you maintain all the information required by § 1051.250.

(d) You must use good engineering judgment for all decisions related to your application (see 40 CFR 1068.5).

(e) An authorized representative of your company must approve and sign the application.

(f) See § 1051.255 for provisions describing how we will process your application.

(g) We may require you to deliver your test vehicles or engines to a facility we designate for our testing (see § 1051.235(c)).

[70 FR 40492, July 13, 2005]

§ 1051.205 What must I include in my application?

This section specifies the information that must be in your application, unless we ask you to include less information under § 1051.201(c). We may require you to provide additional information to evaluate your application.

(a) Describe the engine family's specifications and other basic parameters of the vehicle's design and emission controls. List the fuel type on which your engines are designed to operate (for example, gasoline, liquefied petroleum gas, methanol, or natural gas).

List vehicle configurations and model names that are included in the engine family.

(b) Explain how the emission-control system operates. Describe the evaporative emission controls. Also describe in detail all system components for controlling exhaust emissions, including all auxiliary-emission control devices (AECDs) and all fuel-system components you will install on any production or test vehicle or engine. Identify the part number of each component you describe. For this paragraph (b), treat as separate AECDs any devices that modulate or activate differently from each other. Include all the following:

(1) Give a general overview of the engine, the emission-control strategies, and all AECDs.

(2) Describe each AECD's general purpose and function.

(3) Identify the parameters that each AECD senses (including measuring, estimating, calculating, or empirically deriving the values). Include vehicle-based parameters and state whether you simulate them during testing with the applicable procedures.

(4) Describe the purpose for sensing each parameter.

(5) Identify the location of each sensor the AECD uses.

(6) Identify the threshold values for the sensed parameters that activate the AECD.

(7) Describe the parameters that the AECD modulates (controls) in response to any sensed parameters, including the range of modulation for each parameter, the relationship between the sensed parameters and the controlled parameters and how the modulation achieves the AECD's stated purpose. Use graphs and tables, as necessary.

(8) Describe each AECD's specific calibration details. This may be in the form of data tables, graphical representations, or some other description.

(9) Describe the hierarchy among the AECDs when multiple AECDs sense or modulate the same parameter. Describe whether the strategies interact in a comparative or additive manner and identify which AECD takes precedence in responding, if applicable.

(10) Explain the extent to which the AECD is included in the applicable test procedures specified in subpart F of this part.

(11) Do the following additional things for AECDs designed to protect engines or vehicles:

(i) Identify the engine and/or vehicle design limits that make protection necessary and describe any damage that would occur without the AECD.

(ii) Describe how each sensed parameter relates to the protected components' design limits or those operating conditions that cause the need for protection.

(iii) Describe the relationship between the design limits/parameters being protected and the parameters sensed or calculated as surrogates for those design limits/parameters, if applicable.

(iv) Describe how the modulation by the AECD prevents engines and/or equipment from exceeding design limits.

(v) Explain why it is necessary to estimate any parameters instead of measuring them directly and describe how the AECD calculates the estimated value, if applicable.

(vi) Describe how you calibrate the AECD modulation to activate only during conditions related to the stated need to protect components and only as needed to sufficiently protect those components in a way that minimizes the emission impact.

(c) [Reserved]

(d) Describe the vehicles or engines you selected for testing and the reasons for selecting them.

(e) Describe the test equipment and procedures that you used, including any special or alternate test procedures you used (see § 1051.501).

(f) Describe how you operated the emission-data vehicle before testing, including the duty cycle and the extent of engine operation used to stabilize emission levels. Explain why you selected the method of service accumulation. Describe any scheduled maintenance you did.

(g) List the specifications of the test fuel to show that it falls within the required ranges we specify in 40 CFR part 1065.

(h) Identify the engine family's useful life.

(i) Include the maintenance instructions you will give to the ultimate purchaser of each new vehicle (see §1051.125).

(j) Include the emission-related installation instructions you will provide if someone else installs your engines in a vehicle (see §1051.130).

(k) Describe the labels you create to meet the requirements of §1051.135.

(l) Identify the exhaust emission standards or FELs to which you are certifying engines in the engine family.

(m) Identify the engine family's deterioration factors and describe how you developed them (see §1051.243 and §1051.245). Present any emission test data you used for this.

(n) State that you operated your emission-data vehicles as described in the application (including the test procedures, test parameters, and test fuels) to show you meet the requirements of this part.

(o) Present emission data to show that you meet emission standards, as follows:

(1) Present emission data for hydrocarbons (such as NMHC or THCE, as applicable), NO_X, and CO on an emission-data vehicle to show your vehicles meet the applicable exhaust emission standards we specify in subpart B of this part. Show emission figures before and after applying deterioration factors for each pollutant and for each vehicle or engine. If we specify more than one grade of any fuel type (for example, a summer grade and winter grade of gasoline), you need to submit test data only for one grade, unless the regulations of this part specify otherwise for your engine.

(2) Present evaporative test data for hydrocarbons to show your vehicles meet the evaporative emission standards we specify in subpart B of this part. Show emission figures before and after applying deterioration factors for each vehicle or engine, where applicable. If you did not perform the testing, identify the source of the test data.

(3) Note that §1051.235 and §1051.245 allow you to submit an application in certain cases without new emission data.

(p) Report all test results, including those from invalid tests or from any other tests, whether or not they were conducted according to the test procedures of subpart F of this part. If you measure CO_2, report those emission levels. We may ask you to send other information to confirm that your tests were valid under the requirements of this part and 40 CFR part 1065.

(q) Describe all adjustable operating parameters (see §1051.115(e)), including production tolerances. Include the following in your description of each parameter:

(1) The nominal or recommended setting.

(2) The intended physically adjustable range.

(3) The limits or stops used to establish adjustable ranges.

(4) Information showing why the limits, stops, or other means of inhibiting adjustment are effective in preventing adjustment of parameters on in-use engines to settings outside your intended physically adjustable ranges.

(r) Confirm that your emission-related installation instructions specify how to ensure that sampling of exhaust emissions will be possible after engines are installed in equipment and placed in service. If this cannot be done by simply adding a 20-centimeter extension to the exhaust pipe, show how to sample exhaust emissions in a way that prevents diluting the exhaust sample with ambient air.

(s) Unconditionally certify that all the vehicles and/or engines in the engine family comply with the requirements of this part, other referenced parts of the CFR, and the Clean Air Act.

(t) Include estimates of U.S.-directed production volumes.

(u) Include the information required by other subparts of this part. For example, include the information required by §1051.725 if you participate in the ABT program.

(v) Include other applicable information, such as information specified in this part or 40 CFR part 1068 related to requests for exemptions.

(w) Name an agent for service of process located in the United States. Service on this agent constitutes service on you or any of your officers or employees for any action by EPA or

otherwise by the United States related to the requirements of this part.

[70 FR 40493, July 13, 2005]

§ 1051.210 May I get preliminary approval before I complete my application?

If you send us information before you finish the application, we will review it and make any appropriate determinations, especially for questions related to engine family definitions, auxiliary emission-control devices, deterioration factors, testing for service accumulation, and maintenance. Decisions made under this section are considered to be preliminary approval, subject to final review and approval. We will generally not reverse a decision where we have given you preliminary approval, unless we find new information supporting a different decision. If you request preliminary approval related to the upcoming model year or the model year after that, we will make best-efforts to make the appropriate determinations as soon as practicable. We will generally not provide preliminary approval related to a future model year more than two years ahead of time.

[70 FR 40494, July 13, 2005]

§ 1051.220 How do I amend the maintenance instructions in my application?

You may amend your emission-related maintenance instructions after you submit your application for certification, as long as the amended instructions remain consistent with the provisions of § 1051.125. You must send the Designated Compliance Officer a request to amend your application for certification for an engine family if you want to change the emission-related maintenance instructions in a way that could affect emissions. In your request, describe the proposed changes to the maintenance instructions. We will disapprove your request if we determine that the amended instructions are inconsistent with maintenance you performed on emission-data vehicles.

(a) If you are decreasing the specified maintenance, you may distribute the new maintenance instructions to your customers 30 days after we receive your request, unless we disapprove your request. We may approve a shorter time or waive this requirement.

(b) If your requested change would not decrease the specified maintenance, you may distribute the new maintenance instructions anytime after you send your request. For example, this paragraph (b) would cover adding instructions to increase the frequency of a maintenance step for engines in severe-duty applications.

(c) You need not request approval if you are making only minor corrections (such as correcting typographical mistakes), clarifying your maintenance instructions, or changing instructions for maintenance unrelated to emission control.

[70 FR 40494, July 13, 2005]

§ 1051.225 How do I amend my application for certification to include new or modified vehicles or to change an FEL?

Before we issue you a certificate of conformity, you may amend your application to include new or modified vehicle configurations, subject to the provisions of this section. After we have issued your certificate of conformity, you may send us an amended application requesting that we include new or modified vehicle configurations within the scope of the certificate, subject to the provisions of this section. You must amend your application if any changes occur with respect to any information included in your application.

(a) You must amend your application before you take any of the following actions:

(1) Add a vehicle (that is, an additional vehicle configuration) to an engine family. In this case, the vehicle added must be consistent with other vehicles in the engine family with respect to the criteria listed in § 1051.230.

(2) Change a vehicle already included in an engine family in a way that may affect emissions, or change any of the components you described in your application for certification. This includes production and design changes that may affect emissions any time during the engine's lifetime.

(3) Modify an FEL for an engine family, as described in paragraph (f) of this section.

(b) To amend your application for certification, send the Designated Compliance Officer the following information:

(1) Describe in detail the addition or change in the vehicle model or configuration you intend to make.

(2) Include engineering evaluations or data showing that the amended engine family complies with all applicable requirements. You may do this by showing that the original emission-data vehicle is still appropriate with respect to showing compliance of the amended family with all applicable requirements.

(3) If the original emission-data vehicle for the engine family is not appropriate to show compliance for the new or modified vehicle, include new test data showing that the new or modified vehicle meets the requirements of this part.

(c) We may ask for more test data or engineering evaluations. You must give us these within 30 days after we request them.

(d) For engine families already covered by a certificate of conformity, we will determine whether the existing certificate of conformity covers your new or modified vehicle. You may ask for a hearing if we deny your request (see § 1051.820).

(e) For engine families already covered by a certificate of conformity, you may start producing the new or modified vehicle anytime after you send us your amended application, before we make a decision under paragraph (d) of this section. However, if we determine that the affected vehicles do not meet applicable requirements, we will notify you to cease production of the vehicles and may require you to recall the vehicles at no expense to the owner. Choosing to produce vehicles under this paragraph (e) is deemed to be consent to recall all vehicles that we determine do not meet applicable emission standards or other requirements and to remedy the nonconformity at no expense to the owner. If you do not provide information required under paragraph (c) of this section within 30 days, you must stop producing the new or modified vehicles.

(f) You may ask to change your FEL in the following cases:

(1) You may ask to raise your FEL for your engine family after the start of production. You must use the higher FEL for the entire family to calculate your average emission level under subpart H of this part. In your request, you must demonstrate that you will still be able to comply with the applicable average emission standards as specified in subparts B and H of this part.

(2) You may ask to lower the FEL for your engine family after the start of production only when you have test data from production vehicles indicating that your vehicles comply with the lower FEL. You may create a separate subfamily with the lower FEL. Otherwise, you must use the higher FEL for the family to calculate your average emission level under subpart H of this part.

(3) If you change the FEL during production, you must include the new FEL on the emission control information label for all vehicles produced after the change.

[70 FR 40494, July 13, 2005]

§ 1051.230 How do I select engine families?

(a) Divide your product line into families of vehicles that are expected to have similar emission characteristics throughout the useful life. Except as specified in paragraph (f) of this section, you must have separate engine families for meeting exhaust and evaporative emissions. Your engine family is limited to a single model year.

(b) For exhaust emissions, group vehicles in the same engine family if they are the same in all the following aspects:

(1) The combustion cycle.

(2) The cooling system (liquid-cooled vs. air-cooled).

(3) Configuration of the fuel system (for example, port fuel injection vs. carburetion).

(4) Method of air aspiration.

(5) The number, location, volume, and composition of catalytic converters.

(6) Type of fuel.

(7) The number, arrangement, and approximate bore diameter of cylinders.

(8) Numerical level of the emission standards that apply to the vehicle.

(c) For evaporative emissions, group vehicles in the same engine family if fuel tanks are similar and fuel lines are similar considering all the following aspects:

(1) Type of material (including additives such as pigments, plasticizers, and UV inhibitors).

(2) Emission-control strategy.

(3) Production methods. This does not apply to differences in production methods that would not affect emission characteristics.

(d) You may subdivide a group of vehicles that is identical under paragraph (b) or (c) of this section into different engine families if you show the expected emission characteristics are different during the useful life.

(e) You may group vehicles that are not identical with respect to the things listed in paragraph (b) or (c) of this section in the same engine family, as follows:

(1) You may group such vehicles in the same engine family if you show that their emission characteristics during the useful life will be similar.

(2) If you are a small-volume manufacturer, you may group engines from any vehicles subject to the same emission standards into a single engine family. This does not change any of the requirements of this part for showing that an engine family meets emission standards.

(f) You may divide your product line into engine families based on a combined consideration of exhaust and evaporative emission-control systems, consistent with the requirements of this section. This would allow you to use a single engine-family designation for each engine family instead of having separate engine-family designations for exhaust and evaporative emission-control systems for each model.

(g) Select test engines from the engine family as described in 40 CFR 1065.401. Select test components related to evaporative emission-control systems that are most likely to exceed the applicable emission standards. For example, select a fuel tank with the smallest average wall thickness (or barrier thickness, as appropriate) of those tanks you include in the same family.

[70 FR 40495, July 13, 2005]

§ 1051.235 What emission testing must I perform for my application for a certificate of conformity?

This section describes the emission testing you must perform to show compliance with the emission standards in subpart B of this part.

(a) Test your emission-data vehicles using the procedures and equipment specified in subpart F of this part. Where specifically required or allowed, test the engine instead of the vehicle. For evaporative emissions, test the fuel system components separate from the vehicle.

(b) Select from each engine family an emission-data vehicle, and a fuel system for each fuel type with a configuration that is most likely to exceed the emission standards, using good engineering judgment. Consider the emission levels of all exhaust constituents over the full useful life of the vehicle.

(c) We may measure emissions from any of your test vehicles or engines (or any other vehicles or engines from the engine family), as follows:

(1) We may decide to do the testing at your plant or any other facility. If we do this, you must deliver the test vehicle or engine to a test facility we designate. The test vehicle or engine you provide must include appropriate manifolds, aftertreatment devices, electronic control units, and other emission-related components not normally attached directly to the engine block. If we do the testing at your plant, you must schedule it as soon as possible and make available the instruments, personnel, and equipment we need.

(2) If we measure emissions on one of your test vehicles or engines, the results of that testing become the official emission results. Unless we later invalidate these data, we may decide not to consider your data in determining if your engine family meets applicable requirements.

(3) Before we test one of your vehicles or engines, we may set its adjustable parameters to any point within the physically adjustable ranges (see § 1051.115(c)).

(4) Before we test one of your vehicles or engines, we may calibrate it within normal production tolerances

for anything we do not consider an adjustable parameter.

(d) You may use previously generated emission data in the following cases:

(1) You may ask to use emission data from a previous model year instead of doing new tests, but only if all the following are true:

(i) The engine family from the previous model year differs from the current engine family only with respect to model year.

(ii) The emission-data vehicle from the previous model year remains the appropriate emission-data vehicle under paragraph (b) of this section.

(iii) The data show that the emission-data vehicle would meet all the requirements that apply to the engine family covered by the application for certification.

(2) You may submit emission data for equivalent engine families performed to show compliance with other standards (such as California standards) instead of doing new tests, but only if the data show that the test vehicle or engine would meet all of this part's requirements.

(3) You may submit evaporative emission data measured by a fuel system supplier. We may require you to verify that the testing was conducted in accordance with the applicable regulations.

(e) We may require you to test a second vehicle or engine of the same or different configuration in addition to the vehicle or engine tested under paragraph (b) of this section.

(f) If you use an alternate test procedure under 40 CFR 1065.10 and later testing shows that such testing does not produce results that are equivalent to the procedures specified in subpart F of this part, we may reject data you generated using the alternate procedure.

(g) If you are a small-volume manufacturer, you may certify by design on the basis of preexisting exhaust emission data for similar technologies and other relevant information, and in accordance with good engineering judgment. In those cases, you are not required to test your vehicles. This is called ''design-certification'' or ''certifying by design.'' To certify by design, you must show that the technology used on your engines is sufficiently similar to the previously tested technology that a person reasonably familiar with emission-control technology would believe that your engines will comply with the emission standards.

(h) For fuel tanks that are certified based on permeability treatments for plastic fuel tanks, you do not need to test each engine family. However, you must use good engineering judgment to determine permeation rates for the tanks. This requires that more than one fuel tank be tested for each set of treatment conditions. You may not use test data from a given tank for any other tanks that have thinner walls. You may, however, use test data from a given tank for other tanks that have thicker walls. This applies to both low-hour (i.e., baseline testing) and durability testing. Note that § 1051.245 allows you to use design-based certification instead of generating new emission data.

[70 FR 40495, July 13, 2005]

§ 1051.240 How do I demonstrate that my engine family complies with exhaust emission standards?

(a) For purposes of certification, your engine family is considered in compliance with the applicable numerical exhaust emission standards in subpart B of this part if all emission-data vehicles representing that family have test results showing deteriorated emission levels at or below these standards. (Note: if you participate in the ABT program in subpart H of this part, your FELs are considered to be the applicable emission standards with which you must comply.)

(b) Your engine family is deemed not to comply if any emission-data vehicle representing that family has test results showing a deteriorated emission level above an applicable FEL or emission standard from subpart B of this part for any pollutant.

(c) To compare emission levels from the emission-data vehicle with the applicable emission standards, apply deterioration factors to the measured emission levels. Section 1051.243 specifies how to test your vehicle to develop deterioration factors that represent the deterioration expected in emissions over your vehicle's full useful life.

Your deterioration factors must take into account any available data from in-use testing with similar engines. Small-volume manufacturers may use assigned deterioration factors that we establish. Apply deterioration factors as follows:

(1) For vehicles that use aftertreatment technology, such as catalytic converters, use a multiplicative deterioration factor for exhaust emissions. A multiplicative deterioration factor for a pollutant is the ratio of exhaust emissions at the end of the useful life and exhaust emissions at the low-hour test point. In these cases, adjust the official emission results for each tested vehicle or engine at the selected test point by multiplying the measured emissions by the deterioration factor. If the factor is less than one, use one. Multiplicative deterioration factors must be specified to three significant figures.

(2) For vehicles that do not use aftertreatment technology, use an additive deterioration factor for exhaust emissions. An additive deterioration factor for a pollutant is the difference between exhaust emissions at the end of the useful life and exhaust emissions at the low-hour test point. In these cases, adjust the official emission results for each tested vehicle or engine at the selected test point by adding the factor to the measured emissions. If the factor is less than zero, use zero. Additive deterioration factors must be specified to one more decimal place than the applicable standard.

(d) Collect emission data using measurements to one more decimal place than the applicable standard. Apply the deterioration factor to the official emission result, as described in paragraph (c) of this section, then round the adjusted figure to the same number of decimal places as the emission standard. Compare the rounded emission levels to the emission standard for each emission-data vehicle. In the case of $HC+NO_X$ standards, add the emission results and apply the deterioration factor to the sum of the pollutants before rounding. However, if your deterioration factors are based on emission measurements that do not cover the vehicle's full useful life, apply the deterioration factor to each pollutant and then add the results before rounding.

[70 FR 40496, July 13, 2005]

§ 1051.243 How do I determine deterioration factors from exhaust durability testing?

Establish deterioration factors to determine whether your engines will meet emission standards for each pollutant throughout the useful life, as described in subpart B of this part and § 1051.240. This section describes how to determine deterioration factors, either with pre-existing test data or with new emission measurements.

(a) You may ask us to approve deterioration factors for an engine family based on emission measurements from similar vehicles or engines if you have already given us these data for certifying other vehicles in the same or earlier model years. Use good engineering judgment to decide whether the two vehicles or engines are similar. We will approve your request if you show us that the emission measurements from other vehicles or engines reasonably represent in-use deterioration for the engine family for which you have not yet determined deterioration factors.

(b) If you are unable to determine deterioration factors for an engine family under paragraph (a) of this section, select vehicles, engines, subsystems, or components for testing. Determine deterioration factors based on service accumulation and related testing to represent the deterioration expected from in-use vehicles over the full useful life, as follows:

(1) You must measure emissions from the emission-data vehicle at a low-hour test point and the end of the useful life. You may also test at evenly spaced intermediate points.

(2) Operate the vehicle or engine over a representative duty cycle for a period at least as long as the useful life (in hours or kilometers). You may operate the vehicle or engine continuously.

(3) You may perform maintenance on emission-data vehicles as described in § 1051.125 and 40 CFR part 1065, subpart E.

(4) If you measure emissions at only two points to calculate your deterioration factor, base your calculations on a linear relationship connecting these

two data points for each pollutant. If you measure emissions at three or more points, use a linear least-squares fit of your test data for each pollutant to calculate your deterioration factor.

(5) Use good engineering judgment for all aspects of the effort to establish deterioration factors under this paragraph (b).

(6) You may to use other testing methods to determine deterioration factors, consistent with good engineering judgment.

(c) Include the following information in your application for certification:

(1) If you use test data from a different engine family, explain why this is appropriate and include all the emission measurements on which you base the deterioration factor.

(2) If you do testing to determine deterioration factors, describe the form and extent of service accumulation, including a rationale for selecting the service-accumulation period and the method you use to accumulate hours.

[70 FR 40496, July 13, 2005]

§ 1051.245 How do I demonstrate that my engine family complies with evaporative emission standards?

(a) For purposes of certification, your engine family is considered in compliance with the evaporative emission standards in subpart B of this part if you do either of the following:

(1) You have test results showing permeation emission levels from the fuel tanks and fuel lines in the family are at or below the standards in § 1051.110 throughout the useful life.

(2) You comply with the design specifications in paragraph (e) of this section.

(b) Your engine family is deemed not to comply if any fuel tank or fuel line representing that family has test results showing a deteriorated emission level above the standard.

(c) To compare emission levels with the emission standards, apply deterioration factors to the measured emission levels. For permeation emissions, use the following procedures to establish an additive deterioration factor, as described in § 1051.240(c)(2):

(1) Section 1051.515 specifies how to test your fuel tanks to develop deterioration factors. Small-volume manufacturers may use assigned deterioration factors that we establish. Apply the deterioration factors as follows:

(i) Calculate the deterioration factor from emission tests performed before and after the durability tests as described in § 1051.515(c) and (d), using good engineering judgment. The durability tests described in § 1051.515(d) represent the minimum requirements for determining a deterioration factor. You may not use a deterioration factor that is less than the difference between evaporative emissions before and after the durability tests as described in § 1051.515(c) and (d).

(ii) Do not apply the deterioration factor to test results for tanks that have already undergone these durability tests.

(2) Determine the deterioration factor for fuel lines using good engineering judgment.

(d) Collect emission data using measurements to one more decimal place than the applicable standard. Apply the deterioration factor to the official emission result, as described in paragraph (c) of this section, then round the adjusted figure to the same number of decimal places as the emission standard. Compare the rounded emission levels to the emission standard for each emission-data vehicle.

(e) You may demonstrate for certification that your engine family complies with the evaporative emission standards by demonstrating that you use the following control technologies:

(1) For certification to the standards specified in § 1051.110(a) with the control technologies shown in the following table:

TABLE 1 OF § 1051.245—DESIGN-CERTIFICATION TECHNOLOGIES FOR CONTROLLING TANK PERMEATION

If the tank permeability control technology is . . .	Then you may design-certify with a tank emission level of . . .
(i) A metal fuel tank with no non-metal gaskets or with gaskets made from a low-permeability material [1].	1.5 g/m^2/day.
(ii) A metal fuel tank with non-metal gaskets with an exposed surface area of 1000 mm^2 or less.	1.5 g/m^2/day.

[1] Permeability of 10 g/m^2/day or less according to ASTM D 814–95 (incorporated by reference in § 1051.810).

(2) For certification to the standards specified in § 1051.110(b) with the control technologies shown in the following table:

TABLE 2 OF § 1051.245—DESIGN-CERTIFICATION TECHNOLOGIES FOR CONTROLLING FUEL-LINE PERMEATION

If the fuel-line permeability control technology is . . .	Then you may design-certify with a fuel line permeation emission level of . . .
(i) Hose meeting Category 1 permeation specifications in SAE J2260 (incorporated by reference in § 1051.810).	15 g/m²/day.
(ii) Hose meeting the R11–A or R12 permeation specifications in SAE J30 (incorporated by reference in § 1051.810).	15 g/m²/day.

(3) We may establish additional design certification options where we find that new test data demonstrate that the use of other technology designs will ensure compliance with the applicable emission standards.

[67 FR 68347, Nov. 8, 2002, as amended at 69 FR 2442, Jan. 15, 2004; 70 FR 40497, July 13, 2005]

§ 1051.250 What records must I keep and make available to EPA?

(a) Organize and maintain the following records:

(1) A copy of all applications and any summary information you send us.

(2) Any of the information we specify in § 1051.205 that you were not required to include in your application.

(3) A detailed history of each emission-data vehicle. For each vehicle, describe all of the following:

(i) The emission-data vehicle's construction, including its origin and buildup, steps you took to ensure that it represents production vehicles, any components you built specially for it, and all the components you include in your application for certification.

(ii) How you accumulated vehicle or engine operating hours, including the dates and the number of hours accumulated.

(iii) All maintenance, including modifications, parts changes, and other service, and the dates and reasons for the maintenance.

(iv) All your emission tests, including documentation on routine and standard tests, as specified in 40 CFR part 1065, and the date and purpose of each test.

(v) All tests to diagnose engine or emission-control performance, giving the date and time of each and the reasons for the test.

(vi) Any other significant events.

(4) Production figures for each engine family divided by assembly plant.

(5) Keep a list of engine identification numbers for all the engines you produce under each certificate of conformity.

(b) Keep data from routine emission tests (such as test cell temperatures and relative humidity readings) for one year after we issue the associated certificate of conformity. Keep all other information specified in paragraph (a) of this section for eight years after we issue your certificate.

(c) Store these records in any format and on any media, as long as you can promptly send us organized, written records in English if we ask for them. You must keep these records readily available. We may review them at any time.

(d) Send us copies of any maintenance instructions or explanations if we ask for them.

[70 FR 40497, July 13, 2005]

§ 1051.255 What decisions may EPA make regarding my certificate of conformity?

(a) If we determine your application is complete and shows that the engine family meets all the requirements of this part and the Act, we will issue a certificate of conformity for your engine family for that model year. We may make the approval subject to additional conditions.

(b) We may deny your application for certification if we determine that your engine family fails to comply with emission standards or other requirements of this part or the Act. Our decision may be based on a review of all information available to us. If we deny your application, we will explain why in writing.

(c) In addition, we may deny your application or suspend or revoke your certificate if you do any of the following:

(1) Refuse to comply with any testing or reporting requirements.

(2) Submit false or incomplete information (paragraph (e) of this section applies if this is fraudulent).

(3) Render inaccurate any test data.

(4) Deny us from completing authorized activities despite our presenting a warrant or court order (see 40 CFR 1068.20). This includes a failure to provide reasonable assistance.

(5) Produce engines for importation into the United States at a location where local law prohibits us from carrying out authorized activities.

(6) Fail to supply requested information or amend your application to include all engines being produced.

(7) Take any action that otherwise circumvents the intent of the Act or this part.

(d) We may void your certificate if you do not keep the records we require or do not give us information as required under this part or the Act.

(e) We may void your certificate if we find that you intentionally submitted false or incomplete information.

(f) If we deny your application or suspend, revoke, or void your certificate, you may ask for a hearing (see § 1051.820).

Subpart D—Testing Production-Line Vehicles and Engines

§ 1051.301 When must I test my production-line vehicles or engines?

(a) If you produce vehicles that are subject to the requirements of this part, you must test them as described in this subpart. If your vehicle is certified to g/kW-hr standards, then test the engine; otherwise, test the vehicle. The provisions of this subpart do not apply to small-volume manufacturers.

(b) We may suspend or revoke your certificate of conformity for certain engine families if your production-line vehicles or engines do not meet the requirements of this part or you do not fulfill your obligations under this subpart (see §§ 1051.325 and 1051.340).

(c) Other requirements apply to vehicles and engines that you produce. Other regulatory provisions authorize us to suspend, revoke, or void your certificate of conformity, or order recalls for engines families without regard to whether they have passed these production-line testing requirements. The requirements of this subpart do not affect our ability to do selective enforcement audits, as described in part 1068 of this chapter. Individual vehicles and engines in families that pass these production-line testing requirements must also conform to all applicable regulations of this part and part 1068 of this chapter.

(d) You may ask to use an alternate program for testing production-line vehicles or engines. In your request, you must show us that the alternate program gives equal assurance that your products meet the requirements of this part. If we approve your alternate program, we may waive some or all of this subpart's requirements.

(e) If you certify an engine family with carryover emission data, as described in § 1051.235(c), and these equivalent engine families consistently pass the production-line testing requirements over the preceding two-year period, you may ask for a reduced testing rate for further production-line testing for that family. The minimum testing rate is one vehicle or engine per engine family. If we reduce your testing rate, we may limit our approval to any number of model years. In determining whether to approve your request, we may consider the number of vehicles or engines that have failed the emission tests.

(f) We may ask you to make a reasonable number of production-line vehicles or engines available for a reasonable time so we can test or inspect them for compliance with the requirements of this part.

(g) The requirements of this subpart do not apply to engine families certified under the provisions of § 1051.630.

(h) Vehicles certified to the following standards are exempt from the production-line testing requirements of this subpart if no engine families in the averaging set participate in the averaging, banking, and trading program described in subpart H of this part:

(1) Phase I or Phase 2 standards in § 1051.103

(2) Phase I standards in § 1051.105

(3) Phase I standards in § 1051.107.

(4) The standards in § 1051.615.

(5) The standards in § 1051.145.

[67 FR 68347, Nov. 8, 2002, as amended at 70 FR 40498, July 13, 2005]

§ 1051.305 How must I prepare and test my production-line vehicles or engines?

(a) *Test procedures.* Test your production-line vehicles or engines using the applicable testing procedures in subpart F of this part to show you meet the emission standards in subpart B of this part.

(b) *Modifying a test vehicle or engine.* Once a vehicle or engine is selected for testing (see § 1051.310), you may adjust, repair, prepare, or modify it or check its emissions only if one of the following is true:

(1) You document the need for doing so in your procedures for assembling and inspecting all your production vehicles or engines and make the action routine for all the vehicles or engines in the engine family.

(2) This subpart otherwise specifically allows your action.

(3) We approve your action in advance.

(c) *Malfunction.* If a vehicle or engine malfunction prevents further emission testing, ask us to approve your decision to either repair it or delete it from the test sequence.

(d) *Setting adjustable parameters.* Before any test, we may adjust or require you to adjust any adjustable parameter to any setting within its physically adjustable range.

(1) We may adjust or require you to adjust idle speed outside the physically adjustable range as needed only until the vehicle or engine has stabilized emission levels (see paragraph (e) of this section). We may ask you for information needed to establish an alternate minimum idle speed.

(2) We may make or specify adjustments within the physically adjustable range by considering their effect on emission levels, as well as how likely it is someone will make such an adjustment with in-use vehicles.

(3) We may adjust the air-fuel ratio within the adjustable range specified in § 1051.115(d).

(e) *Stabilizing emission levels.* Before you test production-line vehicles or engines, you may operate the vehicle or engine to stabilize the emission levels. Using good engineering judgment, operate your vehicles or engines in a way that represents the way they will be used. You may operate each vehicle or engine for no more than the greater of two periods:

(1) 50 hours or 500 kilometers.

(2) The number of hours or kilometers you operated the emission-data vehicle used for certifying the engine family (see 40 CFR part 1065, subpart E, or the applicable regulations governing how you should prepare your test vehicle or engine).

(f) *Damage during shipment.* If shipping a vehicle or engine to a remote facility for production-line testing makes necessary an adjustment or repair, you must wait until after the initial emission test to do this work. We may waive this requirement if the test would be impossible or unsafe, or if it would permanently damage the vehicle or engine. Report to us, in your written report under § 1051.345, all adjustments or repairs you make on test vehicles or engines before each test.

(g) *Retesting after invalid tests.* You may retest a vehicle or engine if you determine an emission test is invalid under subpart F of this part. Explain in your written report reasons for invalidating any test and the emission results from all tests. If you retest a vehicle or engine, you may ask us within ten days of testing. We will generally answer within ten days after we receive your information.

[67 FR 68347, Nov. 8, 2002, as amended at 70 FR 40498, July 13, 2005]

§ 1051.310 How must I select vehicles or engines for production-line testing?

(a) Use test results from two vehicles or engines for each engine family to calculate the required sample size for the test period. Update this calculation with each test.

(1) For engine families with projected annual sales of at least 1600, the test periods are consecutive quarters (3 months). If your annual production period is less than 12 months long, define your test periods by dividing your annual production period into approximately equal segments of 70 to 125 calendar days.

(2) For engine families with projected annual sales below 1600, the test period is the whole model year.

(b) Early in each test period, randomly select and test an engine from the end of the assembly line for each engine family.

(1) In the first test period for newly certified engines, randomly select and test one more engine. Then, calculate the required sample size for the test period as described in paragraph (c) of this section.

(2) In later test periods or for engine families relying on previously submitted test data, combine the new test result with the last test result from the previous test period. Then, calculate the required sample size for the new test period as described in paragraph (c) of this section.

(c) Calculate the required sample size for each engine family. Separately calculate this figure for HC, NO_X (or $HC+NO_X$), and CO (and other regulated pollutants). The required sample size is the greater of these calculated values. Use the following equation:

$$N = \left[\frac{(t_{95} \times \sigma)}{(x - STD)}\right]^2 + 1$$

Where:

N = Required sample size for the model year.

t_{95} = 95% confidence coefficient, which depends on the number of tests completed, n, as specified in the table in paragraph (c)(1) of this section. It defines 95% confidence intervals for a one-tail distribution.

x = Mean of emission test results of the sample.

STD = Emission standard (or family emission limit, if applicable).

σ = Test sample standard deviation (see paragraph (c)(2) of this section).

n = The number of tests completed in an engine family.

(1) Determine the 95% confidence coefficient, t_{95}, from the following table:

n	t_{95}	n	t_{95}	n	t_{95}
2	6.31	12	1.80	22	1.72
3	2.92	13	1.78	23	1.72
4	2.35	14	1.77	24	1.71
5	2.13	15	1.76	25	1.71
6	2.02	16	1.75	26	1.71
7	1.94	17	1.75	27	1.71
8	1.90	18	1.74	28	1.70
9	1.86	19	1.73	29	1.70
10	1.83	20	1.73	30+	1.70
11	1.81	21	1.72	.....	.....

(2) Calculate the standard deviation, σ, or the test sample using the following formula:

$$\sigma = \sqrt{\frac{\sum (X_i - x)^2}{n - 1}}$$

Where:

X_i = Emission test result for an individual vehicle or engine.

(d) Use final deteriorated test results to calculate the variables in the equations in paragraph (c) of this section (see § 1051.315(a)).

(e) After each new test, recalculate the required sample size using the updated mean values, standard deviations, and the appropriate 95-percent confidence coefficient.

(f) Distribute the remaining vehicle or engine tests evenly throughout the rest of the year. You may need to adjust your schedule for selecting vehicles or engines if the required sample size changes. Continue to randomly select vehicles or engines from each engine family.

(g) Continue testing any engine family for which the sample mean, x, is greater than the emission standard. This applies if the sample mean for either HC, NO_X (or $HC+NO_X$) or CO (or other regulated pollutants) is greater than the emission standard. Continue testing until one of the following things happens:

(1) The number of tests completed in an engine family, n, is greater than the required sample size, N, and the sample mean, x, is less than or equal to the emission standard. For example, If N = 3.1 after the third test, the sample-size calculation does not allow you to stop testing.

(2) The engine family does not comply according to § 1051.315.

(3) You test 30 vehicles or engines from the engine family.

(4) You test one percent of your projected annual U.S.-directed production volume for the engine family, rounded to the nearest whole number.

(5) You choose to declare that the engine family fails the requirements of this subpart.

(h) If the sample-size calculation allows you to stop testing for a pollutant, you must continue measuring emission levels of that pollutant for any additional tests required under this section. However, you need not

continue making the calculations specified in this section for that pollutant. This paragraph does not affect the requirements in section § 1051.320.

(i) You may elect to test more randomly chosen vehicles or engines than we require under this section. Include these vehicles or engines in the sample-size calculations.

[67 FR 68347, Nov. 8, 2002, as amended at 70 FR 40498, July 13, 2005]

§ 1051.315 How do I know when my engine family fails the production-line testing requirements?

This section describes the pass-fail criteria for the production-line testing requirements. We apply these criteria on an engine family basis. See § 1051.320 for the requirements that apply to individual vehicles or engines that fail a production-line test.

(1) *Initial and final test results.* Calculate and round the test results for each vehicle or engine. If you do several tests on a vehicle or engine, calculate the initial test results, then add them together and divide by the number of tests and round for the final test results on that vehicle or engine.

(2) *Final deteriorated test results.* Apply the deterioration factor for the engine family to the final test results (see § 1051.240(c)).

(b) Construct the following CumSum Equation for each engine family for HC, NO_X (or $HC+NO_X$), and CO emissions (and other regulated pollutants):

$$C_i = C_{i-1} + X_i - (STD + 0.25 \times \sigma)$$

Where:

C_i = The current CumSum statistic.

C_{i-1} = The previous CumSum statistic. For the first test, the CumSum statistic is 0 (*i.e.* $C_1 = 0$).

X_i = The current emission test result for an individual vehicle or engine.

STD = Emission standard.

(c) Use final deteriorated test results to calculate the variables in the equation in paragraph (b) of this section (see § 1051.315(a)).

(d) After each new test, recalculate the CumSum statistic.

(e) If you test more than the required number of vehicles or engines, include the results from these additional tests in the CumSum Equation.

(f) After each test, compare the current CumSum statistic, C_i, to the recalculated Action Limit, H, defined as $H = 5.0 \times \sigma$.

(g) If the CumSum statistic exceeds the Action Limit in two consecutive tests, the engine family fails the production-line testing requirements of this subpart. Tell us within ten working days if this happens. You may request to amend the application for certification to raise the FEL of the engine family at this point if you meet the requirements of § 1051.225(f).

(h) If you amend the application for certification for an engine family under § 1051.225, do not change any previous calculations of sample size or CumSum statistics for the model year.

[67 FR 68347, Nov. 8, 2002, as amended at 70 FR 40499, July 13, 2005]

§ 1051.320 What happens if one of my production-line vehicles or engines fails to meet emission standards?

(a) If you have a production-line vehicle or engine with final deteriorated test results exceeding one or more emission standards (see § 1051.315(a)), the certificate of conformity is automatically suspended for that failing vehicle or engine. You must take the following actions before your certificate of conformity can cover that vehicle or engine:

(1) Correct the problem and retest the vehicle or engine to show it complies with all emission standards.

(2) Include in your written report a description of the test results and the remedy for each vehicle or engine (see § 1051.345).

(b) You may request to amend the application for certification to raise the FEL of the entire engine family at this point (see § 1051.225).

§ 1051.325 What happens if an engine family fails the production-line requirements?

(a) We may suspend your certificate of conformity for an engine family if it fails under § 1051.315. The suspension may apply to all facilities producing vehicles or engines from an engine family, even if you find noncompliant vehicles or engines only at one facility.

(b) We will tell you in writing if we suspend your certificate in whole or in

part. We will not suspend a certificate until at least 15 days after the engine family fails. The suspension is effective when you receive our notice.

(c) Up to 15 days after we suspend the certificate for an engine family, you may ask for a hearing (see § 1051.820). If we agree before a hearing that we used erroneous information in deciding to suspend the certificate, we will reinstate the certificate.

(d) Section 1051.335 specifies steps you must take to remedy the cause of the engine family's production-line failure. All the vehicles you have produced since the end of the last test period are presumed noncompliant and should be addressed in your proposed remedy. We may require you to apply the remedy to engines produced earlier if we determine that the cause of the failure is likely to have affected the earlier engines.

(e) You may request to amend the application for certification to raise the FEL of the engine family before or after we suspend your certificate if you meet the requirements of § 1051.225(f).

[67 FR 68347, Nov. 8, 2002, as amended at 70 FR 40499, July 13, 2005]

§ 1051.330 May I sell vehicles from an engine family with a suspended certificate of conformity?

You may sell vehicles that you produce after we suspend the engine family's certificate of conformity under § 1051.315 only if one of the following occurs:

(a) You test each vehicle or engine you produce and show it complies with emission standards that apply.

(b) We conditionally reinstate the certificate for the engine family. We may do so if you agree to recall all the affected vehicles and remedy any noncompliance at no expense to the owner if later testing shows that the engine family still does not comply.

§ 1051.335 How do I ask EPA to reinstate my suspended certificate?

(a) Send us a written report asking us to reinstate your suspended certificate. In your report, identify the reason for noncompliance, propose a remedy for the engine family, and commit to a date for carrying it out. In your proposed remedy include any quality control measures you propose to keep the problem from happening again.

(b) Give us data from production-line testing that shows the remedied engine family complies with all the emission standards that apply.

§ 1051.340 When may EPA revoke my certificate under this subpart and how may I sell these vehicles again?

(a) We may revoke your certificate for an engine family in the following cases:

(1) You do not meet the reporting requirements.

(2) Your engine family fails to comply with the requirements of this subpart and your proposed remedy to address a suspended certificate under § 1051.325 is inadequate to solve the problem or requires you to change the vehicle's design or emission-control system.

(b) To sell vehicles from an engine family with a revoked certificate of conformity, you must modify the engine family and then show it complies with the requirements of this part.

(1) If we determine your proposed design change may not control emissions for the vehicle's full useful life, we will tell you within five working days after receiving your report. In this case we will decide whether production-line testing will be enough for us to evaluate the change or whether you need to do more testing.

(2) Unless we require more testing, you may show compliance by testing production-line vehicles or engines as described in this subpart.

(3) We will issue a new or updated certificate of conformity when you have met these requirements.

§ 1051.345 What production-line testing records must I send to EPA?

Do all the following things unless we ask you to send us less information:

(a) Within 30 calendar days of the end of each test period, send us a report with the following information:

(1) Describe any facility used to test production-line vehicles or engines and state its location.

(2) State the total U.S.-directed production volume and number of tests for each engine family.

(3) Describe how you randomly selected vehicles or engines.

(4) Describe your test vehicles or engines, including the engine family's identification and the vehicle's model year, build date, model number, identification number, and number of hours of operation before testing for each test vehicle or engine.

(5) Identify how you accumulated hours of operation on the vehicles or engines and describe the procedure and schedule you used.

(6) Provide the test number; the date, time and duration of testing; test procedure; initial test results before and after rounding; final test results; and final deteriorated test results for all tests. Provide the emission results for all measured pollutants. Include information for both valid and invalid tests and the reason for any invalidation.

(7) Describe completely and justify any nonroutine adjustment, modification, repair, preparation, maintenance, or test for the test vehicle or engine if you did not report it separately under this subpart. Include the results of any emission measurements, regardless of the procedure or type of vehicle.

(8) Provide the CumSum analysis required in § 1051.315 for each engine family.

(9) Report on each failed vehicle or engine as described in § 1051.320.

(10) State the date the test period ended for each engine family.

(b) We may ask you to add information to your written report, so we can determine whether your new vehicles conform with the requirements of this subpart.

(c) An authorized representative of your company must sign the following statement:

We submit this report under Sections 208 and 213 of the Clean Air Act. Our production-line testing conformed completely with the requirements of 40 CFR part 1051. We have not changed production processes or quality-control procedures for the engine family in a way that might affect the emission control from production vehicles (or engines). All the information in this report is true and accurate, to the best of my knowledge. I know of the penalties for violating the Clean Air Act and the regulations. (Authorized Company Representative)

(d) Send electronic reports of production-line testing to the Designated Compliance Officer using an approved information format. If you want to use a different format, send us a written request with justification for a waiver.

(e) We will send copies of your reports to anyone from the public who asks for them. See § 1051.815 for information on how we treat information you consider confidential.

[67 FR 68347, Nov. 8, 2002, as amended at 70 FR 40499, July 13, 2005]

§ 1051.350 What records must I keep?

(a) Organize and maintain your records as described in this section. We may review your records at any time.

(b) Keep paper records of your production-line testing for one full year after you complete all the testing required for an engine family in a model year. You may use any additional storage formats or media if you like.

(c) Keep a copy of the written reports described in § 1051.345.

(d) Keep the following additional records:

(1) A description of all test equipment for each test cell that you can use to test production-line vehicles or engines.

(2) The names of supervisors involved in each test.

(3) The name of anyone who authorizes adjusting, repairing, preparing, or modifying a test vehicle or engine and the names of all supervisors who oversee this work.

(4) If you shipped the vehicle or engine for testing, the date you shipped it, the associated storage or port facility, and the date the vehicle or engine arrived at the testing facility.

(5) Any records related to your production-line tests that are not in the written report.

(6) A brief description of any significant events during testing not otherwise described in the written report or in this section.

(7) Any information specified in § 1051.345 that you do not include in your written reports.

(e) If we ask, you must give us projected or actual production figures for an engine family. We may ask you to divide your production figures by rated brake power, displacement, fuel type,

or assembly plant (if you produce vehicles or engines at more than one plant).

(f) Keep a list of vehicle or engine identification numbers for all the vehicles or engines you produce under each certificate of conformity. Give us this list within 30 days if we ask for it.

(g) We may ask you to keep or send other information necessary to implement this subpart.

[67 FR 68347, Nov. 8, 2002, as amended at 70 FR 40499, July 13, 2005]

Subpart E—Testing In-use Engines [Reserved]

Subpart F—Test Procedures

§ 1051.501 What procedures must I use to test my vehicles or engines?

This section describes test procedures that you use to determine whether vehicles meet the emission standards of this part. See § 1051.235 to determine when testing is required for certification. See subpart D of this part for the production-line testing requirements.

(a) *Snowmobiles.* For snowmobiles, use the equipment and procedures for spark-ignition engines in 40 CFR part 1065 to determine whether your snowmobiles meet the duty-cycle emission standards in § 1051.103. Measure the emissions of all the pollutants we regulate in § 1051.103. Use the duty cycle specified in § 1051.505.

(b) *Motorcycles and ATVs.* For motorcycles and ATVs, use the equipment, procedures, and duty cycle in 40 CFR part 86, subpart F, to determine whether your vehicles meet the exhaust emission standards in § 1051.105 or § 1051.107. Measure the emissions of all the pollutants we regulate in § 1051.105 or § 1051.107. If we allow you to certify ATVs based on engine testing, use the equipment, procedures, and duty cycle described or referenced in the section that allows engine testing. For motorcycles with engine displacement at or below 169 cc and all ATVs, use the driving schedule in paragraph (c) of Appendix I to 40 CFR part 86. For all other motorcycles, use the driving schedule in paragraph (b) of Appendix I to part 86. With respect to vehicle-speed governors, test motorcycles and ATVs in their ungoverned configuration, unless we approve in advance testing in a governed configuration. We will only approve testing in a governed configuration if you can show that the governor is permanently installed on all production vehicles and is unlikely to be removed in use. With respect to engine-speed governors, test motorcycles and ATVs in their governed configuration. Run the test engine, with all emission-control systems operating, long enough to stabilize emission levels; you may consider emission levels stable without measurement if you accumulate 12 hours of operation.

(c) *Permeation testing.* (1) Use the equipment and procedures specified in § 1051.515 to measure fuel tank permeation emissions.

(2) Prior to permeation testing of fuel hose, the hose must be preconditioned by filling the hose with the fuel specified in paragraph (d)(3) of this section, sealing the openings, and soaking the hose for 4 weeks at 23 ±5 °C. To measure fuel-line permeation emissions, use the equipment and procedures specified in SAE J30 (incorporated by reference in § 1051.810). The measurements must be performed at 23 ±2 °C using the fuel specified in paragraph (d)(3) of this section.

(d) *Fuels.* Use the fuels meeting the following specifications:

(1) *Exhaust.* Use the fuels and lubricants specified in 40 CFR part 1065, subpart H, for all the exhaust testing we require in this part. For service accumulation, use the test fuel or any commercially available fuel that is representative of the fuel that in-use engines will use.

(2) *Fuel Tank Permeation.* (i) For the preconditioning soak described in § 1051.515(a)(1) and fuel slosh durability test described in § 1051.515(d)(3), use the fuel specified in Table 1 of 40 CFR 1065.710 blended with 10 percent ethanol by volume. As an alternative, you may use Fuel CE10, which is Fuel C as specified in ASTM D 471–98 (incorporated by reference in § 1051.810) blended with 10 percent ethanol by volume.

(ii) For the permeation measurement test in § 1051.515(b), use the fuel specified in Table 1 of 40 CFR 1065.710. As an

alternative, you may use the fuel specified in paragraph (d)(2)(i) of this section.

(3) *Fuel Hose Permeation*. Use the fuel specified in Table 1 of 40 CFR 1065.710 blended with 10 percent ethanol by volume for permeation testing of fuel lines. As an alternative, you may use Fuel CE10, which is Fuel C as specified in ASTM D 471–98 (incorporated by reference in § 1051.810) blended with 10 percent ethanol by volume.

(e) *Special procedures for engine testing.* (1) You may use special or alternate procedures, as described in § 1065.10 of this chapter.

(2) We may reject data you generate using alternate procedures if later testing with the procedures in part 1065 of this chapter shows contradictory emission data.

(3) You may test engines using a test speed based on the point of maximum power if that represents in-use operation better than testing based on maximum test speed.

(f) *Special procedures for vehicle testing.* (1) You may use special or alternate procedures, as described in paragraph (f)(3) of this section.

(2) We may reject data you generate using alternate procedures if later testing with the otherwise specified procedures shows contradictory emission data.

(3)(i) The test procedures specified for vehicle testing are intended to produce emission measurements equivalent to those that would result from measuring emissions during in-use operation using the same vehicle configuration. If good engineering judgment indicates that use of the procedures in this part for a vehicle would result in measurements that are not representative of in-use operation of that vehicle, you must notify us. If we determine that using these procedures would result in measurements that are significantly unrepresentative and that changes to the procedures will result in more representative measurements that do not decrease the stringency of emission standards or other requirements, we will specify changes to the procedures. In your notification to us, you should recommend specific changes you think are necessary.

(ii) You may ask to use emission data collected using other test procedures, such as those of the California Air Resources Board or the International Organization for Standardization. We will allow this only if you show us that these data are equivalent to data collected using our test procedures.

(iii) You may ask to use alternate procedures that produce measurements equivalent to those obtained using the specified procedures. In this case, send us a written request showing that your alternate procedures are equivalent to the test procedures of this part. If you prove to us that the procedures are equivalent, we will allow you to use them. You may not use alternate procedures until we approve them.

(iv) You may ask to use special test procedures if your vehicle cannot be tested using the specified test procedures (for example, it is incapable of operating on the specified transient cycle). In this case, send us a written request showing that you cannot satisfactorily test your engines using the test procedures of this part. We will allow you to use special test procedures if we determine that they would produce emission measurements that are representative of those that would result from measuring emissions during in-use operation. You may not use special procedures until we approve them.

[67 FR 68347, Nov. 8, 2002, as amended at 69 FR 2442, Jan. 15, 2004; 70 FR 40499, July 13, 2005]

§ 1051.505 What special provisions apply for testing snowmobiles?

Use the following special provisions for testing snowmobiles:

(a) You may perform steady-state testing with either discrete-mode or ramped-modal cycles. You must use the type of testing you select in your application for certification for all testing you perform for that engine family. If we test your engines to confirm that they meet emission standards, we will do testing the same way. We may also perform other testing as allowed by the Clean Air Act. Measure steady-state emissions as follows:

(1) For discrete-mode testing, sample emissions separately for each mode, then calculate an average emission

level for the whole cycle using the weighting factors specified for each mode. In each mode, operate the engine for at least 5 minutes, then sample emissions for at least 1 minute. Calculate cycle statistics for the sequence of modes and compare with the specified values in 40 CFR 1065.514 to confirm that the test is valid.

(2) For ramped-modal testing, start sampling at the beginning of the first mode and continue sampling until the end of the last mode. Calculate emissions and cycle statistics the same as for transient testing.

(3) Measure emissions by testing the engine on a dynamometer with one or more of the following sets of duty cycles to determine whether it meets the steady-state emission standards in § 1051.103:

(i) The following duty cycle applies for discrete-mode testing:

TABLE 1 OF § 1051.505—5-MODE DUTY CYCLE FOR SNOWMOBILES

Mode No.	Speed (percent) [1]	Torque (percent) [2]	Minimum time in mode (minutes)	Weighting factors
1	100	100	3.0	0.12
2	85	51	3.0	0.27
3	75	33	3.0	0.25
4	65	19	3.0	0.31
5	([3])	0	3.0	0.05

[1] Percent speed is percent of maximum test speed.
[2] Percent torque is percent of maximum test torque at maximum test speed.
[3] Idle.

(ii) The following duty cycle applies for ramped-modal testing:

TABLE 2 OF § 1051.505—RAMPED-MODAL CYCLE FOR TESTING SNOWMOBILES

RMC mode	Time in mode	Speed (percent) [1]	Torque (percent) [2,3]
1a Steady-state	27	Warm Idle	0
1b Transition	20	Linear Transition	Linear Transition.
2a Steady-state	121	100	100
2b Transition	20	Linear Transition	Linear Transition.
3a Steady-state	347	65	19
3b Transition	20	Linear Transition	Linear Transition.
4a Steady-state	305	85	51
4b Transition	20	Linear Transition	Linear Transition.
5a Steady-state	272	5	33
5b Transition	20	Linear Transition	Linear Transition.
6 Steady-state	28	Warm Idle	0

[1] Percent speed is percent of maximum test speed.
[2] Advance from one mode to the next within a 20-second transition phase. During the transition phase, command a linear progression from the torque setting of the current mode to the torque setting of the next mode.
[3] Percent torque is percent of maximum test torque at maximum test speed.

(b) During idle mode, operate the engine with the following parameters:

(1) Hold the speed within your specifications.

(2) Keep the throttle at the idle-stop position.

(3) Keep engine torque under 5 percent of maximum test torque.

(c) For the full-load operating mode, operate the engine at wide-open throttle.

(d) Ambient temperatures during testing must be between 20 °C and 30 °C (68 °F and 86 °F), or other representative test temperatures, as specified in paragraph (f) of this section.

(e) See 40 CFR part 1065 for detailed specifications of tolerances and calculations.

(f) You may test snowmobiles at ambient temperatures below 20 °C or using intake air temperatures below 20 °C if you show that such testing complies with 40 CFR 1065.10(c)(1). You must get

our approval before you begin the emission testing. For example, the following approach would be appropriate to show that such testing complies with 40 CFR 1065.10(c)(1):

(1) Using good engineering judgment, instrument a representative snowmobile built with a representative engine from the family being tested with an appropriate temperature measuring device located in the intake air plenum where fuel spitback is not likely to occur.

(2) Choose a time and location with the following weather conditions: wind-speed less than 10 knots, no falling precipitation, air temperature between −20 °C and 0 °C (−4 °F and 32 °F).

(3) Operate the snowmobile until its engine reaches a steady operating temperature.

(4) Operate the snowmobile on a level surface free of other vehicle traffic. Operate the snowmobile at each specified engine speed corresponding to each mode in the emissions test specific to the engine being tested. When readings are stable, record the temperature in the intake air plenum and the ambient temperature. Calculate the temperature difference between the air in the plenum and the ambient air for each mode.

(5) Calculate the nominal intake air test temperature for each test mode as −10 °C (14 °F) plus the temperature difference for the corresponding mode determined in paragraph (f)(4) of this section.

(6) Before the emissions test, select the appropriate carburetor jetting for −10 °C (14 °F) conditions according to the jet chart. For each mode, maintain the inlet air temperature within 5 °C (9 °F) of the corresponding modal temperature calculated in paragraph (f)(5) of this section.

(7) Adjust other operating parameters to be consistent with operation at −10 °C (14 °F). For example, this may require that you modify the engine cooling system used in the laboratory to make its performance representative of cold-temperature operation.

[67 FR 68347, Nov. 8, 2002, as amended at 70 FR 40500, July 13, 2005]

§ 1051.510 What special provisions apply for testing ATV engines? [Reserved]

§ 1051.515 How do I test my fuel tank for permeation emissions?

Measure permeation emissions by weighing a sealed fuel tank before and after a temperature-controlled soak.

(a) *Preconditioning fuel soak.* To precondition your fuel tank, follow these five steps:

(1) Fill the tank with the fuel specified in §1051.501(d)(2)(i), seal it, and allow it to soak at 28 ±5 °C for 20 weeks. Alternatively, the tank may be soaked for a shorter period of time at a higher temperature if you can show that the hydrocarbon permeation rate has stabilized.

(2) Determine the fuel tank's internal surface area in square-meters accurate to at least three significant figures. You may use less accurate estimates of the surface area if you make sure not to overestimate the surface area.

(3) Fill the fuel tank with the test fuel specified in §1051.501(d)(2)(ii) to its nominal capacity. If you fill the tank inside the temperature-controlled room or enclosure, do not spill any fuel.

(4) Allow the tank and its contents to equilibrate to 28 ±2 °C.

(5) Seal the fuel tank using fuel caps and other fittings (excluding petcocks) that can be used to seal openings in a production fuel tank. In cases where openings are not normally sealed on the fuel tank (such as hose-connection fittings and vents in fuel caps), these openings may be sealed using nonpermeable fittings such as metal or fluoropolymer plugs.

(b) *Permeation test run.* To run the test, take the following steps for a tank that was preconditioned as specified in paragraph (a) of this section:

(1) Weigh the sealed fuel tank and record the weight to the nearest 0.1 grams. You may use less precise weights as long as the difference in mass from the start of the test to the end of the test has at least three significant figures. Take this measurement within 8 hours of filling the tank with test fuel as specified in paragraph (a)(3) of this section.

(2) Carefully place the tank within a ventilated, temperature-controlled room or enclosure. Do not spill or add any fuel.

(3) Close the room or enclosure and record the time.

(4) Ensure that the measured temperature in the room or enclosure is 28 ±2 °C.

(5) Leave the tank in the room or enclosure for 14 days.

(6) Hold the temperature of the room or enclosure to 28 ±2 °C; measure and record the temperature at least daily.

(7) At the end of the soak period, weigh the sealed fuel tank and record the weight to the nearest 0.1 grams. You may use less precise weights as long as the difference in mass from the start of the test to the end of the test has at least three significant figures. Unless the same fuel is used in the preconditioning fuel soak and the permeation test run, record weight measurements on five separate days per week of testing. The test is void if a linear plot of tank weight vs. test days for the full soak period for permeation testing specified in paragraph (b)(5) of this section yields r^2 below 0.8. See 40 CFR 1065.602 for the equation to calculate r^2.

(8) Subtract the weight of the tank at the end of the test from the weight of the tank at the beginning of the test; divide the difference by the internal surface area of the fuel tank. Divide this g/m^2 value by the number of test days (using at least three significant figures) to calculate the g/m^2/day emission rate. Example: If a tank with an internal surface area of 0.72 m^2 weighed 31882.3 grams at the beginning of the test and weighed 31813.8 grams after soaking for 14.03 days, then the g/m^2/day emission rate would be—

(31882.3 g − 31813.8 g)/0.72 m^2/14.03 days = 6.78 g/m^2/day.

(9) Round your result to the same number of decimal places as the emission standard.

(10) In cases where consideration of permeation rates, using good engineering judgment, leads you to conclude that soaking for 14 days is not long enough to measure weight change to at least three significant figures, you may soak for 14 days longer. In this case, repeat the steps in paragraphs (b)(8) and (9) of this section to determine the weight change for the full 28 days.

(c) *Determination of final test result.* To determine the final test result, apply a deterioration factor to the measured emission level. The deterioration factor is the difference between permeation emissions measured before and after the durability testing described in paragraph (d) of this section. Adjust the baseline test results for each tested fuel tank by adding the deterioration factor to the measured emissions. The deterioration factor determination must be based on good engineering judgement. Therefore, during the durability testing, the test tank may not exceed the fuel tank permeation standard described in §1051.110 (this is known as ''line-crossing''). If the deterioration factor is less than zero, use zero.

(d) *Durability testing.* You normally need to perform a separate durability demonstration for each substantially different combination of treatment approaches and tank materials. Perform these demonstrations before an emission test by taking the following steps, unless you can use good engineering judgment to apply the results of previous durability testing with a different fuel system. You may ask to exclude any of the following durability tests if you can clearly demonstrate that it does not affect the emissions from your fuel tank.

(1) *Pressure cycling.* Perform a pressure test by sealing the tank and cycling it between +2.0 psig and −0.5 psig and back to +2.0 psig for 10,000 cycles at a rate 60 seconds per cycle.

(2) *UV exposure.* Perform a sunlight-exposure test by exposing the tank to an ultraviolet light of at least 24 W/m^2 (0.40 W-hr/m^2/min) on the tank surface for at least 450 hours. Alternatively, the fuel tank may be exposed to direct natural sunlight for an equivalent period of time, as long as you ensure that the tank is exposed to at least 450 daylight hours.

(3) *Slosh testing.* Perform a slosh test by filling the tank to 40 percent of its capacity with the fuel specified in §1051.501(d)(2)(i) and rocking it at a rate of 15 cycles per minute until you reach one million total cycles. Use an angle deviation of +15° to −15° from

level. This test must be performed at a temperature of 28 °C ±5 °C.

(4) *Final test result.* Following the durability testing, the fuel tank must be soaked (as described in paragraph (a) of this section) to ensure that the permeation rate is stable. The period of slosh testing and the period of ultraviolet testing (if performed with fuel in the tank consistent with paragraph (a)(1) of this section) may be considered to be part of this soak, provided that the soak begins immediately after the slosh testing. To determine the final permeation rate, drain and refill the tank with fresh fuel, and repeat the permeation test run (as described in paragraph (b) of this section) immediately after this soak period. The same test fuel must be used for this permeation test run as for the permeation test run performed prior to the durability testing.

(e) *Flow chart.* The following figure presents a flow chart for the permeation testing described in this section, showing the full test procedure with durability testing, as well as the simplified test procedure with an applied deterioration factor:

Figure 1051.515-1: Flow Chart of Permeation Test Procedure with and without DF Determination

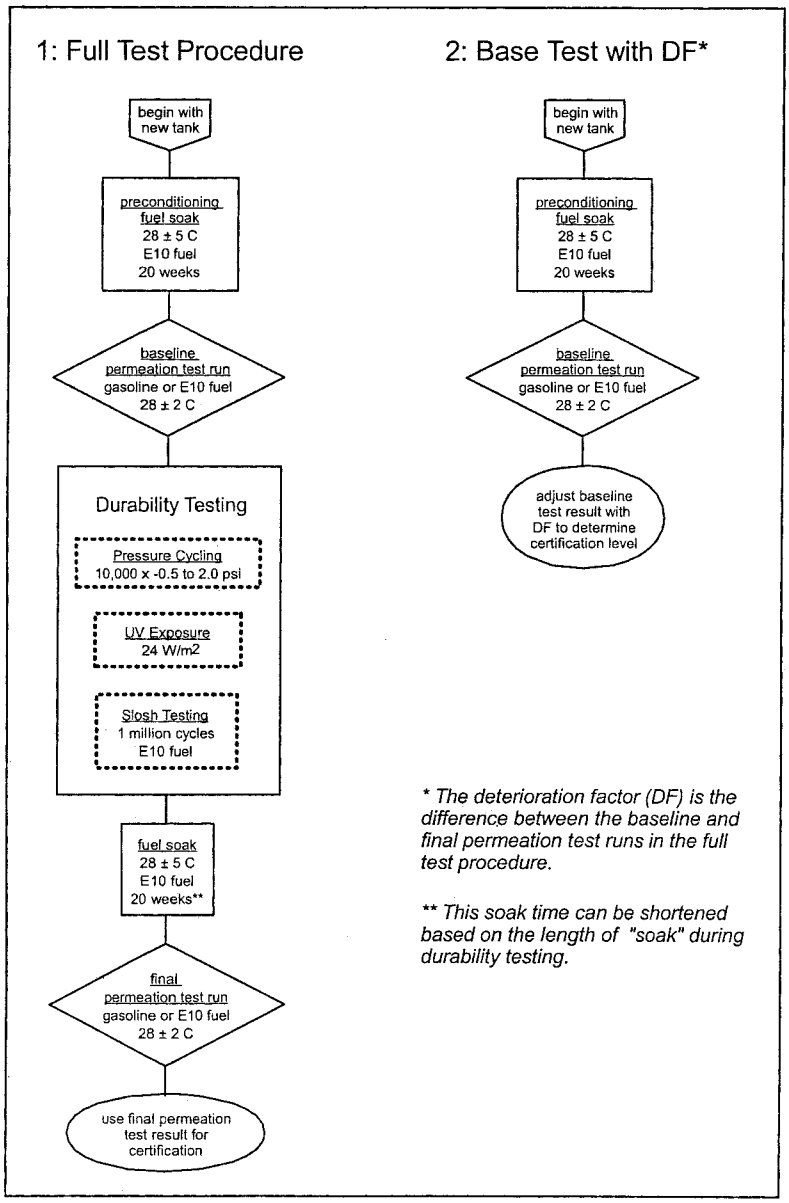

[67 FR 68347, Nov. 8, 2002, as amended at 69 FR 2442, Jan. 15, 2004; 70 FR 40501, July 13, 2005]

§ 1051.520 How do I perform exhaust durability testing?

Sections 1051.240 and 1051.243 describe the method for testing that must be performed to establish deterioration factors for an engine family.

[70 FR 40501, July 13, 2005]

Subpart G—Compliance Provisions

§ 1051.601 What compliance provisions apply to vehicles and engines subject to this part?

Engine and vehicle manufacturers, as well as owners, operators, and rebuilders of these vehicles, and all other persons, must observe the requirements and prohibitions in part 1068 of this chapter and the requirements of the Act. The compliance provisions in this subpart apply only to the vehicles and engines we regulate in this part.

§ 1051.605 What provisions apply to engines already certified under the motor-vehicle program or the Large Spark-ignition program?

(a) *General provisions.* If you are an engine manufacturer, this section allows you to introduce into commerce new recreational vehicles, and engines for recreational vehicles, if the engines are already certified to the requirements that apply to spark-ignition engines under 40 CFR parts 85 and 86 or 40 CFR part 1048 for the appropriate model year. If you comply with all the provisions of this section, we consider the certificate issued under 40 CFR part 86 or 1048 for each engine to also be a valid certificate of conformity under this part 1051 for its model year, without a separate application for certification under the requirements of this part 1051. See § 1051.610 for similar provisions that apply to vehicles that are already certified to the vehicle-based standards for motor vehicles.

(b) *Vehicle-manufacturer provisions.* If you are not an engine manufacturer, you may install an engine certified for the appropriate model year under 40 CFR part 86 or 1048 in a recreational vehicle as long as you meet all the requirements and conditions specified in paragraph (d) of this section. If you modify the non-recreational engine in any of the ways described in paragraph (d)(2) of this section for installation in a recreational vehicle, we will consider you a manufacturer of recreational vehicles. Such engine modifications prevent you from using the provisions of this section.

(c) *Liability.* Engines for which you meet the requirements of this section are exempt from all the requirements and prohibitions of this part, except for those specified in this section. Engines exempted under this section must meet all the applicable requirements from 40 CFR parts 85 and 86 or 40 CFR part 1048. This paragraph (c) applies to engine manufacturers, vehicle manufacturers who use such an engine, and all other persons as if the engine were used in its originally intended application. The prohibited acts of 40 CFR 1068.101(a)(1) apply to these new engines and vehicles; however, we consider the certificate issued under 40 CFR part 86 or 1048 for each engine to also be a valid certificate of conformity under this part 1051 for its model year. If we make a determination that these engines do not conform to the regulations during their useful life, we may require you to recall them under this part 1051 or under 40 CFR part 85 or 1068.505.

(d) *Specific requirements.* If you are an engine or vehicle manufacturer and meet all the following criteria and requirements regarding your new engine or vehicle, the vehicle using the engine is eligible for an exemption under this section:

(1) Your engine must be covered by a valid certificate of conformity issued under 40 CFR part 86 or 1048.

(2) You must not make any changes to the certified engine that could reasonably be expected to increase its exhaust emissions for any pollutant, or its evaporative emissions. For example, if you make any of the following changes to one of these engines, you do not qualify for this exemption:

(i) Change any fuel system or evaporative system parameters from the certified configuration (this does not apply to refueling controls).

(ii) Change, remove, or fail to properly install any other component, element of design, or calibration specified in the engine manufacturer's application for certification. This includes aftertreatment devices and all related components.

(iii) Modify or design the engine cooling system so that temperatures or heat rejection rates are outside the original engine manufacturer's specified ranges.

(3) You must show that fewer than 50 percent of the engine family's total sales in the United States are used in recreational vehicles. This includes engines used in any application, without regard to which company manufactures the vehicle or equipment. Show this as follows:

(i) If you are the original manufacturer of the engine, base this showing on your sales information.

(ii) In all other cases, you must get the original manufacturer of the engine to confirm this based on its sales information.

(4) You must ensure that the engine has the emission control information label we require under 40 CFR part 86 or 1048.

(5) You must add a permanent supplemental label to the engine in a position where it will remain clearly visible after installation in the vehicle. In the supplemental label, do the following:

(i) Include the heading: ''RECREATIONAL VEHICLE EMISSION CONTROL INFORMATION''.

(ii) Include your full corporate name and trademark. You may instead include the full corporate name and trademark of another company you choose to designate.

(iii) State: ''THIS ENGINE WAS ADAPTED FOR A RECREATIONAL USE WITHOUT AFFECTING ITS EMISSION CONTROLS.''.

(iv) State the date you finished installation (month and year), if applicable.

(6) The original and supplemental labels must be readily visible after the engine is installed in the vehicle or, if the vehicle obscures the engine's emission control information label, the make sure the vehicle manufacturer attaches duplicate labels, as described in 40 CFR 1068.105.

(7) Send the Designated Compliance Officer a signed letter by the end of each calendar year (or less often if we tell you) with all the following information:

(i) Identify your full corporate name, address, and telephone number.

(ii) List the engine or vehicle models you expect to produce under this exemption in the coming year.

(iii) State: ''We produce each listed [engine or vehicle] model for recreational application without making any changes that could increase its certified emission levels, as described in 40 CFR 1051.605.''.

(e) *Failure to comply*. If your engines do not meet the criteria listed in paragraph (d) of this section, they will be subject to the standards, requirements, and prohibitions of this part 1051 and the certificate issued under 40 CFR part 86 or 1048 will not be deemed to also be a certificate issued under this part 1051. Introducing these engines into commerce without a valid exemption or certificate of conformity under this part violates the prohibitions in 40 CFR 1068.101(a)(1).

(f) *Data submission*. We may require you to send us emission test data on any applicable nonroad duty cycles.

(g) *Participation in averaging, banking and trading*. Engines or vehicles adapted for recreational use under this section may not generate or use emission credits under this part 1051. These engines or vehicles may generate credits under the ABT provisions in 40 CFR part 86. These engines or vehicles must use emission credits under 40 CFR part 86 if they are certified to an FEL that exceeds an applicable standard.

[70 FR 40501, July 13, 2005]

§ 1051.610 What provisions apply to vehicles already certified under the motor-vehicle program?

(a) *General provisions*. If you are a motor-vehicle manufacturer, this section allows you to introduce new recreational vehicles into commerce if the vehicle is already certified to the requirements that apply under 40 CFR parts 85 and 86. If you comply with all of the provisions of this section, we consider the certificate issued under 40 CFR part 86 for each motor vehicle to

also be a valid certificate of conformity for the engine under this part 1051 for its model year, without a separate application for certification under the requirements of this part 1051. This section applies especially for highway motorcycles that are modified for recreational nonroad use. See § 1051.605 for similar provisions that apply to motor-vehicle engines or Large SI engines produced for recreational vehicles.

(b) *Nonroad vehicle-manufacturer provisions.* If you are not a motor-vehicle manufacturer, you may produce recreational vehicles from motor vehicles under this section as long as you meet all the requirements and conditions specified in paragraph (d) of this section. If you modify the motor vehicle or its engine in any of the ways described in paragraph (d)(2) of this section, we will consider you a manufacturer of a new recreational vehicle. Such modifications prevent you from using the provisions of this section.

(c) *Liability.* Engines and vehicles for which you meet the requirements of this section are exempt from all the requirements and prohibitions of this part, except for those specified in this section. Engines exempted under this section must meet all the applicable requirements from 40 CFR parts 85 and 86. This applies to engine manufacturers, vehicle manufacturers, and all other persons as if the recreational vehicles were motor vehicles. The prohibited acts of 40 CFR 1068.101(a)(1) apply to these new recreational vehicles; however, we consider the certificate issued under 40 CFR part 86 for each motor vehicle to also be a valid certificate of conformity for the recreational vehicle under this part 1051 for its model year. If we make a determination that these engines or vehicles do not conform to the regulations during their useful life, we may require you to recall them under 40 CFR part 86 or 40 CFR 1068.505.

(d) *Specific requirements.* If you are a motor-vehicle manufacturer and meet all the following criteria and requirements regarding your new recreational vehicle and its engine, the vehicle is eligible for an exemption under this section:

(1) Your vehicle must be covered by a valid certificate of conformity as a motor vehicle issued under 40 CFR part 86.

(2) You must not make any changes to the certified vehicle that we could reasonably expect to increase its exhaust emissions for any pollutant, or its evaporative emissions if it is subject to evaporative-emission standards. For example, if you make any of the following changes, you do not qualify for this exemption:

(i) Change any fuel system parameters from the certified configuration.

(ii) Change, remove, or fail to properly install any other component, element of design, or calibration specified in the vehicle manufacturer's application for certification. This includes aftertreatment devices and all related components.

(iii) Modify or design the engine cooling system so that temperatures or heat rejection rates are outside the original vehicle manufacturer's specified ranges.

(iv) Add more than 500 pounds to the curb weight of the originally certified motor vehicle.

(3) You must show that fewer than 50 percent of the engine family's total sales in the United States are used in recreational vehicles. This includes any type of vehicle, without regard to which company completes the manufacturing of the recreational vehicle. Show this as follows:

(i) If you are the original manufacturer of the vehicle, base this showing on your sales information.

(ii) In all other cases, you must get the original manufacturer of the vehicle to confirm this based on their sales information.

(4) The vehicle must have the vehicle emission control information we require under 40 CFR part 86.

(5) You must add a permanent supplemental label to the vehicle in a position where it will remain clearly visible. In the supplemental label, do the following:

(i) Include the heading: ''RECREATIONAL VEHICLE ENGINE EMISSION CONTROL INFORMATION''.

(ii) Include your full corporate name and trademark. You may instead include the full corporate name and trademark of another company you choose to designate.

(iii) State: ''THIS VEHICLE WAS ADAPTED FOR RECREATIONAL USE WITHOUT AFFECTING ITS EMISSION CONTROLS.''.

(iv) State the date you finished modifying the vehicle (month and year), if applicable.

(6) The original and supplemental labels must be readily visible in the fully assembled vehicle.

(7) Send the Designated Compliance Officer a signed letter by the end of each calendar year (or less often if we tell you) with all the following information:

(i) Identify your full corporate name, address, and telephone number.

(ii) List the vehicle models you expect to produce under this exemption in the coming year.

(iii) State: ''We produced each listed engine or vehicle model for recreational application without making any changes that could increase its certified emission levels, as described in 40 CFR 1051.610.''.

(e) *Failure to comply*. If your engines or vehicles do not meet the criteria listed in paragraph (d) of this section, the engines will be subject to the standards, requirements, and prohibitions of this part 1051, and the certificate issued under 40 CFR part 86 will not be deemed to also be a certificate issued under this part 1051. Introducing these engines into commerce without a valid exemption or certificate of conformity under this part violates the prohibitions in 40 CFR 1068.101(a)(1).

(f) *Data submission*. We may require you to send us emission test data on any applicable nonroad duty cycles.

(g) *Participation in averaging, banking and trading.* Vehicles adapted for recreational use under this section may not generate or use emission credits under this part 1051. These engines may generate credits under the ABT provisions in 40 CFR part 86. These engines must use emission credits under 40 CFR part 86 if they are certified to an FEL that exceeds an applicable standard.

[70 FR 40502, July 13, 2005]

§ 1051.615 What are the special provisions for certifying small recreational engines?

(a) You may certify ATVs with engines that have total displacement of less than 100 cc to the following exhaust emission standards instead of certifying them to the exhaust emission standards of subpart B of this part:

(1) 25.0 g/kW-hr $HC+NO_X$, with an FEL cap of 40.0 g/kW-hr $HC+NO_X$.

(2) 500 g/kW-hr CO.

(b) You may certify off-highway motorcycles with engines that have total displacement of 70 cc or less to the following exhaust emission standards instead of certifying them to the exhaust emission standards of subpart B of this part:

(1) 16.1 g/kW-hr $HC+NO_X$, with an FEL cap of 32.2 g/kW-hr $HC+NO_X$.

(2) 519 g/kW-hr CO.

(c) You may use the averaging, banking, and trading provisions of subpart H of this part to show compliance with this $HC+NO_X$ standards (an engine family meets emission standards even if its family emission limit is higher than the standard, as long as you show that the whole averaging set of applicable engine families meet the applicable emission standards using emission credits, and the vehicles within the family meet the family emission limit). You may not use averaging to meet the CO standards of this section.

(d) Measure steady-state emissions by testing the engine on an engine dynamometer using the equipment and procedures of 40 CFR part 1065 with either discrete-mode or ramped-modal cycles. You must use the type of testing you select in your application for certification for all testing you perform for that engine family. If we test your engines to confirm that they meet emission standards, we will do testing the same way. We may also perform other testing as allowed by the Clean Air Act. Measure steady-state emissions as follows:

(1) For discrete-mode testing, sample emissions separately for each mode, then calculate an average emission level for the whole cycle using the weighting factors specified for each mode. In each mode, operate the engine for at least 5 minutes, then sample

emissions for at least 1 minute. Calculate cycle statistics for the sequence of modes and compare with the specified values in 40 CFR 1065.514 to confirm that the test is valid.

(2) For ramped-modal testing, start sampling at the beginning of the first mode and continue sampling until the end of the last mode. Calculate emissions and cycle statistics the same as for transient testing.

(3) Measure emissions by testing the engine on a dynamometer with one or more of the following sets of duty cycles to determine whether it meets applicable emission standards:

(i) The following duty cycle applies for discrete-mode testing:

TABLE 1 OF § 1051.615—6-MODE DUTY CYCLE FOR RECREATIONAL ENGINES

Mode No.	Engine speed (percent) [1]	Torque (percent) [2]	Minimum time in mode (minutes)	Weighting factors
1	85	100	5.0	0.09
2	85	75	5.0	0.20
3	85	50	5.0	0.29
4	85	25	5.0	0.30
5	85	10	5.0	0.07
6	([3])	0	5.0	0.05

[1] Percent speed is percent of maximum test speed.
[2] Percent torque is percent of maximum test torque at maximum test speed.
[3] Idle.

(ii) The following duty cycle applies for ramped-modal testing:

TABLE 2 OF § 1051.615—RAMPED-MODAL CYCLE FOR TESTING RECREATIONAL ENGINES

RMC mode	Time	Speed (percent) [1,2]	Torque (percent) [2,3]
1a Steady-state	41	Warm Idle	0
1b Transition	20	Linear Transition	Linear Transition.
2a Steady-state	135	85	100
2b Transition	20	85	Linear Transition.
3a Steady-state	112	85	10
3b Transition	20	85	Linear Transition.
4a Steady-state	337	85	75
4b Transition	20	85	Linear Transition.
5a Steady-state	518	85	25
5b Transition	20	85	Linear Transition.
6a Steady-state	494	85	50
6b Transition	20	Linear Transition	Linear Transition.
7 Steady-state	43	Warm Idle	0

[1] Percent speed is percent of maximum test speed.
[2] Advance from one mode to the next within a 20-second transition phase. During the transition phase, command a linear progression from the torque setting of the current mode to the torque setting of the next mode.
[3] Percent torque is percent of maximum test torque at the commanded test speed.

(4) During idle mode, hold the speed within your specifications, keep the throttle fully closed, and keep engine torque under 5 percent of the peak torque value at maximum test speed.

(5) For the full-load operating mode, operate the engine at wide-open throttle.

(6) See 40 CFR part 1065 for detailed specifications of tolerances and calculations.

(e) All other requirements and prohibitions of this part apply to these engines and vehicles.

[67 FR 68347, Nov. 8, 2002, as amended at 70 FR 40503, July 13, 2005]

§ 1051.620 When may a manufacturer obtain an exemption for competition recreational vehicles?

(a) We may grant you an exemption from the standards and requirements of this part for a new recreational vehicle on the grounds that it is to be used

solely for competition. The provisions of this part other than those in this section do not apply to recreational vehicles that we exempt for use solely for competition.

(b) We will exempt vehicles that we determine will be used solely for competition. The basis of our determinations are described in paragraphs (b)(1), (b)(2), and (c) of this section. Exemptions granted under this section are good for only one model year and you must request renewal for each subsequent model year. We will not approve your renewal request if we determine the vehicles will not be used solely for competition.

(1) *Off-highway motorcycles.* Motorcycles that are marketed and labeled as only for competitive use and that meet at least four of the criteria listed in paragraphs (b)(1)(i) through (vi) of this section are considered to be used solely for competition, except in cases where other information is available that indicates that they are not used solely for competition. The following features are indicative of motorcycles used solely for competition:

(i) The absence of a headlight or other lights.

(ii) The absence of a spark arrestor.

(iii) The absence of manufacturer warranty.

(iv) Suspension travel greater than 10 inches.

(v) Engine displacement greater than 50 cc.

(vi) The absence of a functional seat. (For example, a seat with less than 30 square inches of seating surface would generally not be considered a functional seat).

(2) *Snowmobiles and ATVs.* Snowmobiles and ATVs meeting all of the following criteria are considered to be used solely for competition, except in cases where other information is available that indicates that they are not used solely for competition:

(i) The vehicle or engine may not be displayed for sale in any public dealership.

(ii) Sale of the vehicle must be limited to professional racers or other qualified racers.

(iii) The vehicle must have performance characteristics that are substantially superior to noncompetitive models.

(c) Vehicles not meeting the applicable criteria listed in paragraph (b) of this section will be exempted only in cases where the manufacturer has clear and convincing evidence that the vehicles will be used solely for competition.

(d) You must permanently label vehicles exempted under this section to clearly indicate that they are to be used only for competition. Failure to properly label a vehicle will void the exemption for that vehicle.

(e) If we request it, you must provide us any information we need to determine whether the vehicles are used solely for competition.

[67 FR 68347, Nov. 8, 2002, as amended at 70 FR 40504, July 13, 2005]

§ 1051.625 What special provisions apply to unique snowmobile designs for small-volume manufacturers?

(a) If you are a small-volume manufacturer, we may permit you to produce up to 600 snowmobiles per year that are certified to less stringent emission standards than those in § 1051.103, as long as you meet all the conditions and requirements in this section.

(b) To apply for alternate standards under this section, send the Designated Officer a written request. In your request, do two things:

(1) Show that the snowmobile has unique design, calibration, or operating characteristics that make it atypical and infeasible or highly impractical to meet the emission standards in § 1051.103, considering technology, cost, and other factors.

(2) Identify the level of compliance you can achieve, including a description of available emission-control technologies and any constraints that may prevent more effective use of these technologies.

(c) You must give us other relevant information if we ask for it.

(d) An authorized representative of your company must sign the request and include the statement: ''All the information in this request is true and accurate, to the best of my knowledge.''.

(e) Send your request for this extension at least nine months before the relevant deadline. If different deadlines apply to companies that are not small-volume manufacturers, do not send your request before the regulations in question apply to the other manufacturers.

(f) If we approve your request, we will set alternate standards for your qualifying snowmobiles. These standards will not be above 400 g/kW-hr for CO or 150 g/kW-hr for HC.

(g) You may produce these snowmobiles to meet the alternate standards we establish under this section as long as you continue to produce them at the same or lower emission levels.

(h) You may not include snowmobiles you produce under this section in any averaging, banking, or trading calculations under Subpart H of this part.

(i) You must meet all the requirements of this part, except as noted in this section.

§ 1051.630 What special provisions apply to unique snowmobile designs for all manufacturers?

(a) We may permit you to produce up to 600 snowmobiles per year that are certified to the FELs listed in this section without new test data, as long as you meet all the conditions and requirements in this section.

(b) You may certify these snowmobiles with FELs of 560 g/kW-hr for CO and 270 g/kW-hr for HC (using the normal certification procedures).

(c) The emission levels described in this section are intended to represent worst-case emission levels. You may not certify snowmobiles under this section if good engineering judgment indicates that they have emission rates higher than these levels.

(d) Include snowmobiles you produce under this section in your averaging calculations under Subpart H of this part.

(e) You must meet all the requirements of this part, unless the regulations of this part specify otherwise.

§ 1051.635 What provisions apply to new manufacturers that are small businesses?

(a) If you are a small business (as defined by the Small Business Administration) that manufactures recreational vehicles, but does not otherwise qualify for the small-volume manufacturer provisions of this part, you may ask us to designate you to be a small-volume manufacturer. You may do this whether you began manufacturing recreational vehicles before, during, or after 2002.

(b) We may set other reasonable conditions that are consistent with the intent of this section and the Act. For example, we may place sales limits on companies that we designate to be small-volume manufacturers under this section.

§ 1051.640 What special provisions apply for custom off-highway motorcycles that are similar to highway motorcycles?

You may ask to exempt custom-designed off-highway motorcycles that are substantially similar to highway motorcycles under the display exemption provisions of 40 CFR 86.407–78(c). Motorcycles exempt under this provision are subject to the restrictions of 40 CFR 86.407–78(c) and are considered to be motor vehicles for the purposes of this part 1051.

[69 FR 2445, Jan. 15, 2004]

§ 1051.645 What special provisions apply to branded engines?

The following provisions apply if you identify the name and trademark of another company instead of your own on your emission control information label, as provided by § 1051.135(c)(2):

(a) You must have a contractual agreement with the other company that obligates that company to take the following steps:

(1) Meet the emission warranty requirements that apply under § 1051.120. This may involve a separate agreement involving reimbursement of warranty-related expenses.

(2) Report all warranty-related information to the certificate holder.

(b) In your application for certification, identify the company whose trademark you will use and describe the arrangements you have made to meet your requirements under this section.

(c) You remain responsible for meeting all the requirements of this chapter, including warranty and defect-reporting provisions.

[70 FR 40504, July 13, 2005]

Subpart H—Averaging, Banking, and Trading for Certification

§ 1051.701 General provisions.

(a) You may average, bank, and trade emission credits for purposes of certification as described in this subpart to show compliance with the standards of this part. To do this you must certify your engines to Family Emission Limits (FELs) and show that your average emission levels are below the applicable standards in subpart B of this part, or that you have sufficient credits to offset a credit deficit for the model year (as calculated in § 1051.720).

(b) The following averaging set restrictions apply:

(1) You may not average together engine families that are certified to different standards. You may, however, use banked credits that were generated relative to different standards, except as prohibited by paragraphs (b)(2) and (3) of this section, paragraph (e) of this section, or by other provisions in this part. For example, you may not average together within a model year off-highway motorcycles that are certified to the standards in § 1051.105(a)(1) and § 1051.105(a)(2); but you may use banked credits generated by off-highway motorcycles that are certified to the standards in § 1051.105(a)(1) to show compliance with the standards in § 1051.105(a)(2) in a later model year, and vice versa.

(2) There are separate averaging, banking, and trading programs for snowmobiles, ATVs, and off-highway motorcycles. You may not average or exchange banked or traded credits from engine families of one type of vehicle with those from engine families of another type of vehicle.

(3) You may not average or exchange banked or traded credits with other engine families if you use fundamentally different measurement procedures for the different engine families (for example, ATVs certified to chassis-based vs. engine-based standards). This paragraph (b)(3) does not restrict you from averaging together engine families that use test procedures that we determine provide equivalent emission results.

(4) You may not average or exchange banked or traded exhaust credits with evaporative credits, or vice versa.

(c) The definitions of Subpart I of this part apply to this subpart. The following definitions also apply:

(1) *Actual emission credits* means emission credits you have generated that we have verified by reviewing your final report.

(2) *Average standard* means a standard that allows you comply by averaging all your vehicles under this part. See subpart B of this part to determine which standards are average standards.

(3) *Averaging set* means a set of engines in which emission credits may be exchanged only with other engines in the same averaging set.

(4) *Broker* means any entity that facilitates a trade of emission credits between a buyer and seller.

(5) *Buyer* means the entity that receives emission credits as a result of a trade.

(6) *Reserved emission credits* means emission credits you have generated that we have not yet verified by reviewing your final report.

(7) *Seller* means the entity that provides emission credits during a trade.

(8) *Trade* means to exchange emission credits, either as a buyer or seller.

(d) In your application for certification, base your showing of compliance on projected production volumes for vehicles whose point of first retail sale is in the United States. As described in § 1051.730, compliance with the requirements of this subpart is determined at the end of the model year based on actual production volumes for vehicles whose point of first retail sale is in the United States. Do not include any of the following vehicles to calculate emission credits:

(1) Vehicles exempted under subpart G of this part or under 40 CFR part 1068.

(2) Exported vehicles.

(3) Vehicles not subject to the requirements of this part, such as those excluded under § 1051.5.

(4) Vehicles for which the location of first retail sale is in a state that has applicable state emission regulations for that model year. However, this restriction does not apply if we determine that the state standards and requirements are equivalent to those of this part and that these vehicles sold in such a state will not generate credits under the state program. For example, you may not include vehicles certified for California if it has more stringent emission standards for these vehicles or those vehicles generate or use emission credits under the California program.

(5) Any other vehicles, where we indicate elsewhere in this part 1051 that they are not to be included in the calculations of this subpart.

(e) You may not use emission credits generated under this subpart to offset any emissions that exceed an FEL or standard, except as specified in § 1051.225(f)(1). This applies for all testing, including certification testing, in-use testing, selective enforcement audits, and other production-line testing.

(f) Emission credits may be used in the model year they are generated or in future model years. Emission credits may not be used for past model years.

(g) You may increase or decrease an FEL during the model year by amending your application for certification under § 1051.225.

[67 FR 68347, Nov. 8, 2002, as amended at 70 FR 40504, July 13, 2005]

§ 1051.705 How do I average emission levels?

(a) As specified in subpart B of this part, certify each vehicle to an FEL, subject to the FEL caps in subpart B of this part.

(b) Calculate a preliminary average emission level according to § 1051.720 for each averaging set using projected U.S.-directed production volumes from your application for certification, excluding vehicles described in § 1051.701(d)(4).

(c) After the end of your model year, calculate a final average emission level according to § 1051.720 for each type of recreational vehicle or engine you manufacture or import. Use actual U.S.-directed production volumes, excluding vehicles described in § 1051.701(d)(4).

(d) If your preliminary average emission level is below the allowable average standard, see § 1051.710 for information about generating and banking emission credits. These credits will be considered reserved until we verify them in reviewing the end-of-year report.

(e) If your average emission level is above the allowable average standard, you must obtain enough emission credits to offset the deficit by the due date for the final report required in § 1051.730. The emission credits used to address the deficit may come from emission credits you have banked or from emission credits you obtain through trading.

[67 FR 68347, Nov. 8, 2002, as amended at 70 FR 40505, July 13, 2005]

§ 1051.710 How do I generate and bank emission credits?

(a) Banking is the retention of emission credits by the manufacturer generating the emission credits for use in averaging or trading in future model years. You may use banked emission credits only within the averaging set in which they were generated.

(b) If your average emission level is below the average standard, you may calculate credits according to § 1051.720. Credits you generate do not expire.

(c) You may generate credits if you are a certifying manufacturer.

(d) In your application for certification, designate any emission credits you intend to bank. These emission credits will be considered reserved credits. During the model year and before the due date for the final report, you may redesignate these emission credits for averaging or trading.

(e) You may use banked emission credits from the previous model year for averaging or trading before we verify them, but we may revoke these emission credits if we are unable to verify them after reviewing your reports or auditing your records.

(f) Reserved credits become actual emission credits only when we verify them in reviewing your final report.

[70 FR 40505, July 13, 2005]

§ 1051.715 How do I trade emission credits?

(a) Trading is the exchange of emission credits between manufacturers. You may use traded emission credits for averaging, banking, or further trading transactions. Traded emission credits may be used only within the averaging set in which they were generated.

(b) You may trade banked credits to any certifying manufacturer.

(c) You may trade actual emission credits as described in this subpart. You may also trade reserved emission credits, but we may revoke these emission credits based on our review of your records or reports or those of the company with which you traded emission credits.

(d) If a negative emission credit balance results from a transaction, both the buyer and seller are liable, except in cases we deem to involve fraud. See § 1051.255(e) for cases involving fraud. We may void the certificates of all engine families participating in a trade that results in a manufacturer having a negative balance of emission credits. See § 1051.745.

[70 FR 40505, July 13, 2005]

§ 1051.720 How do I calculate my average emission level or emission credits?

(a) Calculate your average emission level for each type of recreational vehicle or engine for each model year according to the following equation and round it to the nearest tenth of a g/km or g/kW-hr. Use consistent units throughout the calculation.

(1) For exhaust emissions:

(i) Calculate the average emission level as:

$$\text{Emission level} = \left[\sum_i (\text{FEL})_i \times (\text{UL})_i \times (\text{Production})_i\right] \Big/ \left[\sum_i (\text{Production})_i \times (\text{UL})_i\right]$$

Where:

FEL_i = The FEL to which the engine family is certified.

UL_i = The useful life of the engine family.

$Production_i$ = The number of vehicles in the engine family.

(ii) Use U.S.-directed production projections for initial certification, and actual U.S.-directed production volumes to determine compliance at the end of the model year.

(2) For vehicles that have standards expressed as g/kW-hr and a useful life in kilometers, convert the useful life to kW-hr based on the maximum power output observed over the emission test and an assumed vehicle speed of 30 km/hr as follows: UL (kW-hr) = UL (km) × Maximum Test Power (kW) ÷ 30 km/hr. (Note: It is not necessary to include a load factor, since credit exchange is not allowed between vehicles certified to g/kW-hr standards and vehicles certified to g/km standards.)

(3) For evaporative emission standards expressed as g/m²/day, use the useful life value in years multiplied by 365.24 and calculate the average emission level as:

$$\text{Emission level} = \left[\sum_i (\text{FEL})_i \times (\text{UL})_i \times (\text{Production})_i\right] / \left[\sum_i (\text{Production})_i \times (\text{UL})_i\right]$$

Where:

FEL_i = The FEL to which the engine family is certified, as described in paragraph (a)(4) of this section.

$Production_i$ = The number of vehicles in the engine family times the average internal surface area of the vehicles' fuel tanks.

(4) Determine the FEL for calculating credits under paragraph (a)(3) of

this section using any of the following values:

(i) The FEL to which the tank is certified, as long as the FEL is at or below 3.0 g/m²/day.

(ii) 10.4 g/m²/day. However, if you use this value to establish the FEL for any of your tanks, you must use this value to establish the FEL for every tank not covered by paragraph (a)(4)(i) of this section.

(iii) The measured permeation rate of the tank or the measured permeation rate of a thinner-walled tank of the same material. However, if you use this approach to establish the FEL for any of your tanks, you must establish an FEL based on emission measurements for every tank not covered by paragraph (a)(4)(i) of this section.

(b) If your average emission level is below the average standard, calculate credits available for banking according to the following equation and round them to the nearest tenth of a gram:

$$\text{Credit} = \left[(\text{Average standard} - \text{Emission level})\right] \times \left[\sum_{i} (\text{Production})_i \times (\text{UL})_i\right]$$

(c) If your average emission level is above the average standard, calculate your preliminary credit deficit according to the following equation, rounding to the nearest tenth of a gram:

$$\text{Deficit} = \left[(\text{Emission level} - \text{Average standard})\right] \times \left[\sum_{i} (\text{Production})_i \times (\text{UL})_i\right]$$

[67 FR 68347, Nov. 8, 2002, as amended at 70 FR 40505, July 13, 2005]

§ 1051.725 What must I include in my applications for certification?

(a) You must declare in your applications for certification your intent to use the provisions of this subpart. You must also declare the FELs you select for each engine family. Your FELs must comply with the specifications of subpart B of this part, including the FEL caps. FELs must be expressed to the same number of decimal places as the applicable standards.

(b) Include the following in your application for certification:

(1) A statement that, to the best of your belief, you will not have a negative balance of emission credits for any averaging set when all emission credits are calculated at the end of the year. This means that if you believe that your average emission level will be above the standard (*i.e.*, that you will have a deficit for the model year), you must have banked credits (or project to have received traded credits) to offset the deficit.

(2) Detailed calculations of projected emission credits (positive or negative) based on projected production volumes. If you will generate positive emission credits, state specifically where the emission credits will be applied (for example, whether they will be traded or reserved for banking). If you have projected negative emission credits, state the source of positive emission credits to offset the negative emission credits. Describe whether the emission credits are actual or reserved and whether they will come from banking, trading, or a combination of these. If you intend to rely on trading, identify from which manufacturer the emission credits will come.

[70 FR 40506, July 13, 2005]

§ 1051.730 What ABT reports must I send to EPA?

(a) If any of your engine families are certified using the ABT provisions of

this subpart, you must send an end-of-year report within 90 days after the end of the model year and a final report within 270 days after the end of the model year. We may waive the requirement to send the end-of year report, as long as you send the final report on time.

(b) Your end-of-year and final reports must include the following information for each engine family:

(1) Engine-family designation.

(2) The emission standards that would otherwise apply to the engine family.

(3) The FEL for each pollutant. If you changed an FEL during the model year, identify each FEL you used and calculate the positive or negative emission credits under each FEL. Also, describe how the applicable FEL can be identified for each vehicle you produced. For example, you might keep a list of vehicle identification numbers that correspond with certain FEL values.

(4) The projected and actual production volumes for the model year with a point of retail sale in the United States. If you changed an FEL during the model year, identify the actual production volume associated with each FEL.

(5) For vehicles that have standards expressed as g/kW-hr, maximum engine power for each vehicle configuration, and the sales-weighted average engine power for the engine family.

(6) Useful life.

(7) Calculated positive or negative emission credits. Identify any emission credits that you traded, as described in paragraph (d)(1) of this section.

(c) Your end-of-year and final reports must include the following additional information:

(1) Show that your net balance of emission credits in each averaging set in the applicable model year is not negative.

(2) State whether you will reserve any emission credits for banking.

(3) State that the report's contents are accurate.

(d) If you trade emission credits, you must send us a report within 90 days after the transaction, as follows:

(1) As the seller, you must include the following information in your report:

(i) The corporate names of the buyer and any brokers.

(ii) A copy of any contracts related to the trade.

(iii) The engine families that generated emission credits for the trade, including the number of emission credits from each family.

(2) As the buyer, you must include the following information in your report:

(i) The corporate names of the seller and any brokers.

(ii) A copy of any contracts related to the trade.

(iii) How you intend to use the emission credits, including the number of emission credits you intend to apply to each engine family (if known).

(e) Send your reports electronically to the Designated Compliance Officer using an approved information format. If you want to use a different format, send us a written request with justification for a waiver.

(f) Correct errors in your end-of-year report or final report as follows:

(1) You may correct any errors in your end-of-year report when you prepare the final report, as long as you send us the final report by the time it is due.

(2) If you or we determine within 270 days after the end of the model year that errors mistakenly decrease your balance of emission credits, you may correct the errors and recalculate the balance of emission credits. You may not make these corrections for errors that are determined more than 270 days after the end of the model year. If you report a negative balance of emission credits, we may disallow corrections under this paragraph (f)(2).

(3) If you or we determine anytime that errors mistakenly increase your balance of emission credits, you must correct the errors and recalculate the balance of emission credits.

[70 FR 40506, July 13, 2005]

§ 1051.735 What records must I keep?

(a) You must organize and maintain your records as described in this section. We may review your records at any time.

(b) Keep the records required by this section for eight years after the due date for the end-of-year report. You may use any appropriate storage formats or media, including paper, microfilm, or computer diskettes.

(c) Keep a copy of the reports we require in § 1051.725 and § 1051.730.

(d) Keep the following additional records for each engine you produce under the ABT program:

(1) Engine family designation.

(2) Engine identification number.

(3) FEL and useful life.

(4) For vehicles that have standards expressed as g/kW-hr, maximum engine power.

(5) Build date and assembly plant.

(6) Purchaser and destination.

(e) We may require you to keep additional records or to send us relevant information not required by this section.

[70 FR 40506, July 13, 2005]

§ 1051.740 Are there special averaging provisions for snowmobiles?

For snowmobiles, you may only use credits for the same phase or set of standards against which they were generated, except as allowed by this section.

(a) *Restrictions.* (1) You may not use any Phase 1 or Phase 2 credits for Phase 3 compliance.

(2) You may not use Phase 1 HC credits for Phase 2 HC compliance. However, because the Phase 1 and Phase 2 CO standards are the same, you may use Phase 1 CO credits for compliance with the Phase 2 CO standards.

(b) *Special credits for next phase of standards.* You may choose to generate credits early for banking for purposes of compliance with later phases of standards as follows:

(1) If your corporate average emission level at the end of the model year exceeds the applicable (current) phase of standards (without the use of traded or previously banked credits), you may choose to redesignate some of your snowmobile production to a calculation to generate credits for a future phase of standards. To generate credits the snowmobiles designated must have an FEL below the emission level of that set of standards. This can be done on a pollutant specific basis.

(2) Do not include the snowmobiles that you redesignate in the final compliance calculation of your average emission level for the otherwise applicable (current) phase of standards. Your average emission level for the remaining (non-redesignated) snowmobiles must comply with the otherwise applicable (current) phase of standards.

(3) Include the snowmobiles that you redesignate in a separate calculation of your average emission level for redesignated engines. Calculate credits using this average emission level relative to the specific pollutant in the future phase of standards. These credits may be used for compliance with the future standards.

(4) For generating early Phase 3 credits, you may generate credits for $HC+NO_X$ or CO separately as described:

(i) To determine if you qualify to generate credits in accordance with paragraphs (b)(1) through (3) of this section, you must meet the credit trigger level. For $HC+NO_X$ this value is 62 g/kW-hr (which would be the $HC+NO_X$ standard that would result from inputting the highest allowable CO standard (275 g/kW-hr) into the Phase 3 equation). For CO the value is 200 g/kW-hr (which would be the CO standard that would result from inputting the highest allowable $HC+NO_X$ standard (90 g/kW-hr) into the Phase 3 equation).

(ii) $HC+NO_X$ and CO credits for Phase 3 are calculated relative to the 62 g/kW-hr and 200 g/kW-hr values, respectively.

(5) Credits can also be calculated for Phase 3 using both sets of standards. Without regard to the trigger level values, if your net emission reduction for the redesignated averaging set exceeds the requirements of Phase 3 in § 1051.103 (using both $HC+NO_X$ and CO in the Phase 3 equation in § 1051.103), then your credits are the difference between the Phase 3 reduction requirement of that section and your calculated value.

[70 FR 40507, July 13, 2005]

§ 1051.745 What can happen if I do not comply with the provisions of this subpart?

(a) For each engine family participating in the ABT program, the certificate of conformity is conditional upon full compliance with the provisions of this subpart during and after the model

year. You are responsible to establish to our satisfaction that you fully comply with applicable requirements. We may void the certificate of conformity for an engine family if you fail to comply with any provisions of this subpart.

(b) You may certify your engine family to an FEL above an applicable standard based on a projection that you will have enough emission credits to avoid a negative credit balance for each averaging set for the applicable model year. However, except as allowed in § 1051.145(h), we may void the certificate of conformity if you cannot show in your final report that you have enough actual emission credits to offset a deficit for any pollutant in an engine family.

(c) We may void the certificate of conformity for an engine family if you fail to keep records, send reports, or give us information we request.

(d) You may ask for a hearing if we void your certificate under this section (see § 1051.820).

[70 FR 40507, July 13, 2005]

Subpart I—Definitions and Other Reference Information

§ 1051.801 What definitions apply to this part?

The following definitions apply to this part. The definitions apply to all subparts unless we note otherwise. All undefined terms have the meaning the Act gives to them. The definitions follow:

Act means the Clean Air Act, as amended, 42 U.S.C. 7401–7671q.

Adjustable parameter means any device, system, or element of design that someone can adjust (including those which are difficult to access) and that, if adjusted, may affect emissions or engine performance during emission testing or normal in-use operation. This includes, but is not limited to, parameters related to injection timing and fueling rate. You may ask us to exclude a parameter that is difficult to access if it cannot be adjusted to affect emissions without significantly degrading engine performance, or if you otherwise show us that it will not be adjusted in a way that affects emissions during in-use operation.

Aftertreatment means relating to a catalytic converter, particulate filter, or any other system, component, or technology mounted downstream of the exhaust valve (or exhaust port) whose design function is to decrease emissions in the engine exhaust before it is exhausted to the environment. Exhaust-gas recirculation (EGR) and turbochargers are not aftertreatment.

All-terrain vehicle means a land-based or amphibious nonroad vehicle that meets the criteria listed in paragraph (1) of this definition; or, alternatively the criteria of paragraph (2) of this definition but not the criteria of paragraph (3) of this definition:

(1) Vehicles designed to travel on four low pressure tires, having a seat designed to be straddled by the operator and handlebars for steering controls, and intended for use by a single operator and no other passengers are all-terrain vehicles.

(2) Other all-terrain vehicles have three or more wheels and one or more seats, are designed for operation over rough terrain, are intended primarily for transportation, and have a maximum vehicle speed of 25 miles per hour or higher. Golf carts generally do not meet these criteria since they are generally not designed for operation over rough terrain.

(3) Vehicles that meet the definition of ''offroad utility vehicle'' in this section are not all-terrain vehicles. However, § 1051.1(a) specifies that some offroad utility vehicles are required to meet the same requirements as all-terrain vehicles.

Amphibious vehicle means a vehicle with wheels or tracks that is designed primarily for operation on land and secondarily for operation in water.

Auxiliary emission-control device means any element of design that senses temperature, motive speed, engine RPM, transmission gear, or any other parameter for the purpose of activating, modulating, delaying, or deactivating the operation of any part of the emission-control system.

Brake power means the usable power output of the engine, not including power required to fuel, lubricate, or heat the engine, circulate coolant to the engine, or to operate aftertreatment devices.

Calibration means the set of specifications and tolerances specific to a particular design, version, or application of a component or assembly capable of functionally describing its operation over its working range.

Certification means relating to the process of obtaining a certificate of conformity for an engine family that complies with the emission standards and requirements in this part.

Certified emission level means the highest deteriorated emission level in an engine family for a given pollutant from either transient or steady-state testing.

Compression-ignition means relating to a type of reciprocating, internal-combustion engine that is not a spark-ignition engine.

Crankcase emissions means airborne substances emitted to the atmosphere from any part of the engine crankcase's ventilation or lubrication systems. The crankcase is the housing for the crankshaft and other related internal parts.

Critical emission-related component means any of the following components:

(1) Electronic control units, aftertreatment devices, fuel-metering components, EGR-system components, crankcase-ventilation valves, all components related to charge-air compression and cooling, and all sensors and actuators associated with any of these components.

(2) Any other component whose primary purpose is to reduce emissions.

Designated Compliance Officer means the Manager, Engine Programs Group (6405–J), U.S. Environmental Protection Agency, 1200 Pennsylvania Ave., NW., Washington, DC 20460.

Designated Enforcement Officer means the Director, Air Enforcement Division (2242A), U.S. Environmental Protection Agency, 1200 Pennsylvania Ave., NW.,Washington, DC 20460.

Deteriorated emission level means the emission level that results from applying the appropriate deterioration factor to the official emission result of the emission-data vehicle.

Deterioration factor means the relationship between emissions at the end of useful life and emissions at the low-hour test point, expressed in one of the following ways:

(1) For multiplicative deterioration factors, the ratio of emissions at the end of useful life to emissions at the low-hour test point.

(2) For additive deterioration factors, the difference between emissions at the end of useful life and emissions at the low-hour test point.

Emission-control system means any device, system, or element of design that controls or reduces the regulated emissions from an engine.

Emission-data vehicle means a vehicle or engine that is tested for certification. This includes vehicles or engines tested to establish deterioration factors.

Emission-related maintenance means maintenance that substantially affects emissions or is likely to substantially affect emission deterioration.

Engine configuration means a unique combination of engine hardware and calibration within an engine family. Engines within a single engine configuration differ only with respect to normal production variability.

Engine family has the meaning given in § 1051.230.

Evaporative means relating to fuel emissions that result from permeation of fuel through the fuel system materials and from ventilation of the fuel system.

Excluded means relating to an engine that either:

(1) Has been determined not to be a nonroad engine, as specified in 40 CFR 1068.30; or

(2) Is a nonroad engine that is excluded from this part 1051 under the provisions of § 1051.5.

Exempted has the meaning given in 40 CFR 1068.30.

Exhaust-gas recirculation means a technology that reduces emissions by routing exhaust gases that had been exhausted from the combustion chamber(s) back into the engine to be mixed with incoming air before or during combustion. The use of valve timing to increase the amount of residual exhaust gas in the combustion chamber(s) that is mixed with incoming air before or during combustion is not considered exhaust-gas recirculation for the purposes of this part.

Family emission limit (FEL) means an emission level declared by the manufacturer to serve in place of an otherwise applicable emission standard under the ABT program in subpart H of this part. The family emission limit must be expressed to the same number of decimal places as the emission standard it replaces. The family emission limit serves as the emission standard for the engine family with respect to all required testing.

Fuel line means all hoses or tubing designed to contain liquid fuel or fuel vapor. This includes all hoses or tubing for the filler neck, for connections between dual fuel tanks, and for connecting a carbon canister to the fuel tank. This does not include hoses or tubing for routing crankcase vapors to the engine's intake or any other hoses or tubing that are open to the atmosphere.

Fuel system means all components involved in transporting, metering, and mixing the fuel from the fuel tank to the combustion chamber(s), including the fuel tank, fuel tank cap, fuel pump, fuel filters, fuel lines, carburetor or fuel-injection components, and all fuel-system vents. In the case where the fuel tank cap or other components (excluding fuel lines) are directly mounted on the fuel tank, they are considered to be a part of the fuel tank.

Fuel type means a general category of fuels such as gasoline or natural gas. There can be multiple grades within a single fuel type, such as winter-grade and all-season gasoline.

Good engineering judgment means judgments made consistent with generally accepted scientific and engineering principles and all available relevant information. See 40 CFR 1068.5 for the administrative process we use to evaluate good engineering judgment.

Hydrocarbon (HC) means the hydrocarbon group on which the emission standards are based for each fuel type. For alcohol-fueled engines, HC means total hydrocarbon equivalent (THCE). For all other engines, HC means nonmethane hydrocarbon (NMHC).

Identification number means a unique specification (for example, a model number/serial number combination) that allows someone to distinguish a particular vehicle or engine from other similar engines.

Low-hour means relating to an engine with stabilized emissions and represents the undeteriorated emission level. This would generally involve less than 24 hours or 240 kilometers of operation.

Manufacturer has the meaning given in section 216(1) of the Act. In general, this term includes any person who manufactures a vehicle or engine for sale in the United States or otherwise introduces a new vehicle or engine into commerce in the United States. This includes importers that import vehicles or engines for resale.

Maximum engine power has the meaning given in 40 CFR 90.3.

Maximum test power means the maximum brake power of an engine at test conditions.

Maximum test speed has the meaning given in 40 CFR 1065.1001.

Maximum test torque has the meaning given in 40 CFR 1065.1001.

Model year means one of the following things:

(1) For freshly manufactured vehicles (see definition of ''new,'' paragraph (1)), model year means one of the following:

(i) Calendar year.

(ii) Your annual new model production period if it is different than the calendar year. This must include January 1 of the calendar year for which the model year is named. It may not begin before January 2 of the previous calendar year and it must end by December 31 of the named calendar year.

(2) For an engine originally manufactured as a motor-vehicle engine or a stationary engine that is later intended to be used in a vehicle subject to the standards and requirements of this part 1051, model year means the calendar year in which the engine was originally produced (see definition of ''new,'' paragraph (2)).

(3) For a nonroad engine that has been previously placed into service in an application covered by 40 CFR part 90, 91, or 1048, where that engine is installed in a piece of equipment that is covered by this part 1051, model year means the calendar year in which the engine was originally produced (see definition of ''new ,'' paragraph (3)).

(4) For engines that are not freshly manufactured but are installed in new recreational vehicles, model year means the calendar year in which the engine is installed in the recreational vehicle (see definition of ''new,'' paragraph (4)).

(5) For imported engines:

(i) For imported engines described in paragraph (5)(i) of the definition of ''new,'' *model year* has the meaning given in paragraphs (1) through (4) of this definition.

(ii) For imported engines described in paragraph (5)(ii) of the definition of ''new,'' *model year* means the calendar year in which the vehicle is modified.

Motor vehicle has the meaning given in 40 CFR 85.1703(a).

New means relating to any of the following things:

(1) A freshly manufactured vehicle for which the ultimate purchaser has never received the equitable or legal title. This kind of vehicle might commonly be thought of as ''brand new.'' In the case of this paragraph (1), the vehicle becomes new when it is fully assembled for the first time. The engine is no longer new when the ultimate purchaser receives the title or the product is placed into service, whichever comes first.

(2) An engine originally manufactured as a motor-vehicle engine or a stationary engine that is later intended to be used in a vehicle subject to the standards and requirements of this part 1051. In this case, the engine is no longer a motor-vehicle or stationary engine and becomes new. The engine is no longer new when it is placed into service as a recreational vehicle covered by this part 1051.

(3) A nonroad engine that has been previously placed into service in an application covered by 40 CFR part 90, 91, or 1048, where that engine is installed in a piece of equipment that is covered by this part 1051. The engine is no longer new when it is placed into service in a recreational vehicle covered by this part 1051. For example, this would apply to a marine propulsion engine that is no longer used in a marine vessel.

(4) An engine not covered by paragraphs (1) through (3) of this definition that is intended to be installed in a new vehicle covered by this part 1051. The engine is no longer new when the ultimate purchaser receives a title for the vehicle or it is placed into service, whichever comes first. This generally includes installation of used engines in new recreational vehicles.

(5) An imported vehicle or engine, subject to the following provisions:

(i) An imported recreational vehicle or recreational-vehicle engine covered by a certificate of conformity issued under this part that meets the criteria of one or more of paragraphs (1) through (4) of this definition, where the original manufacturer holds the certificate, is new as defined by those applicable paragraphs.

(ii) An imported recreational vehicle or recreational-vehicle engine covered by a certificate of conformity issued under this part, where someone other than the original manufacturer holds the certificate (such as when the engine is modified after its initial assembly), becomes new when it is imported. It is no longer new when the ultimate purchaser receives a title for the vehicle or engine or it is placed into service, whichever comes first.

(iii) An imported recreational vehicle or recreational-vehicle engine that is not covered by a certificate of conformity issued under this part at the time of importation is new, but only if it was produced on or after the 2007 model year. This addresses uncertified engines and equipment initially placed into service that someone seeks to import into the United States. Importation of this kind of new nonroad engine (or equipment containing such an engine) is generally prohibited by 40 CFR part 1068.

Noncompliant means relating to a vehicle that was originally covered by a certificate of conformity, but is not in the certified configuration or otherwise does not comply with the conditions of the certificate.

Nonconforming means relating to vehicle not covered by a certificate of conformity that would otherwise be subject to emission standards.

Nonmethane hydrocarbon means the difference between the emitted mass of total hydrocarbons and the emitted mass of methane.

Nonroad means relating to nonroad engines or equipment that includes nonroad engines.

Nonroad engine has the meaning given in 40 CFR 1068.30. In general this means all internal-combustion engines except motor-vehicle engines, stationary engines, engines used solely for competition, or engines used in aircraft.

Off-highway motorcycle means a two-wheeled vehicle with a nonroad engine and a seat (excluding marine vessels and aircraft). (Note: highway motorcycles are regulated under 40 CFR part 86.)

Official emission result means the measured emission rate for an emission-data vehicle on a given duty cycle before the application of any deterioration factor, but after the applicability of regeneration adjustment factors.

Offroad utility vehicle means a nonroad vehicle that has four or more wheels, seating for two or more persons, is designed for operation over rough terrain, and has either a rear payload of 350 pounds or more or seating for six or more passengers. Vehicles intended primarily for recreational purposes that are not capable of transporting six passengers (such as dune buggies) are not offroad utility vehicles. (NOTE: §1051.1(a) specifies that some offroad utility vehicles are required to meet the requirements that apply for all-terrain vehicles.)

Owners manual means a document or collection of documents prepared by the engine manufacturer for the owner or operator to describe appropriate engine maintenance, applicable warranties, and any other information related to operating or keeping the engine. The owners manual is typically provided to the ultimate purchaser at the time of sale.

Oxides of nitrogen has the meaning given in 40 CFR 1065.1001.

Phase 1 means relating to Phase 1 standards of §§1051.103, 1051.105, or 1051.107, or other Phase 1 standards specified in subpart B of this part.

Phase 2 means relating to Phase 2 standards of §1051.103, or other Phase 2 standards specified in subpart B of this part.

Phase 3 means relating to Phase 3 standards of §1051.103, or other Phase 3 standards specified in subpart B of this part.

Placed into service means put into initial use for its intended purpose.

Point of first retail sale means the location at which the initial retail sale occurs. This generally means an equipment dealership, but may also include an engine seller or distributor in cases where loose engines are sold to the general public for uses such as replacement engines.

Recreational means, for purposes of this part, relating to snowmobiles, all-terrain vehicles, off-highway motorcycles, and other vehicles that we regulate under this part. Note that 40 CFR part 90 applies to engines used in other recreational vehicles.

Revoke has the meaning given in 40 CFR 1068.30.

Round has the meaning given in 40 CFR 1065.1001, unless otherwise specified.

Scheduled maintenance means adjusting, repairing, removing, disassembling, cleaning, or replacing components or systems periodically to keep a part or system from failing, malfunctioning, or wearing prematurely. It also may mean actions you expect are necessary to correct an overt indication of failure or malfunction for which periodic maintenance is not appropriate.

Small-volume manufacturer means one of the following:

(1) For motorcycles and ATVs, a manufacturer that sold motorcycles or ATVs before 2003 and had annual U.S.-directed production of no more than 5,000 off-road motorcycles and ATVs (combined number) in 2002 and all earlier calendar years. For manufacturers owned by a parent company, the limit applies to the production of the parent company and all of its subsidiaries.

(2) For snowmobiles, a manufacturer that sold snowmobiles before 2003 and had annual U.S.-directed production of no more than 300 snowmobiles in 2002 and all earlier model years. For manufacturers owned by a parent company, the limit applies to the production of the parent company and all of its subsidiaries.

(3) A manufacturer that we designate to be a small-volume manufacturer under §1051.635.

Snowmobile means a vehicle designed to operate outdoors only over snow-covered ground, with a maximum width of 1.5 meters or less.

Spark-ignition means relating to a gasoline-fueled engine or any other type of engine with a spark plug (or other sparking device) and with operating characteristics significantly similar to the theoretical Otto combustion cycle. Spark-ignition engines usually use a throttle to regulate intake air flow to control power during normal operation.

Suspend has the meaning given in 40 CFR 1068.30.

Test sample means the collection of engines selected from the population of an engine family for emission testing. This may include testing for certification, production-line testing, or in-use testing.

Test vehicle or engine means an engine in a test sample.

Total hydrocarbon means the combined mass of organic compounds measured by the specified procedure for measuring total hydrocarbon, expressed as a hydrocarbon with a hydrogen-to-carbon mass ratio of 1.85:1.

Total hydrocarbon equivalent means the sum of the carbon mass contributions of non-oxygenated hydrocarbons, alcohols and aldehydes, or other organic compounds that are measured separately as contained in a gas sample, expressed as exhaust hydrocarbon from petroleum-fueled engines. The hydrogen-to-carbon ratio of the equivalent hydrocarbon is 1.85:1.

Ultimate purchaser means, with respect to any new nonroad equipment or new nonroad engine, the first person who in good faith purchases such new nonroad equipment or new nonroad engine for purposes other than resale.

Ultraviolet light means electromagnetic radiation with a wavelength between 300 and 400 nanometers.

United States has the meaning given in 40 CFR 1068.30.

Upcoming model year means for an engine family the model year after the one currently in production.

U.S.-directed production volume means the number of vehicle units, subject to the requirements of this part, produced by a manufacturer for which the manufacturer has a reasonable assurance that sale was or will be made to ultimate purchasers in the United States. This includes vehicles for which the location of first retail sale is in a state that has applicable state emission regulations for that model year, unless we specify otherwise.

Useful life means the period during which a vehicle is required to comply with all applicable emission standards, specified as a given number of calendar years and kilometers (whichever comes first). In some cases, useful life is also limited by a given number of hours of engine operation. If an engine has no odometer (or hour meter), the specified number of kilometers (or hours) does not limit the period during which an in-use vehicle is required to comply with emission standards, unless the degree of service accumulation can be verified separately. The useful life for an engine family must be at least as long as both of the following:

(1) The expected average service life before the vehicle is remanufactured or retired from service.

(2) The minimum useful life value.

Void has the meaning given in 40 CFR 1068.30.

We (us, our) means the Administrator of the Environmental Protection Agency and any authorized representatives.

Wide-open throttle means maximum throttle opening. Unless this is specified at a given speed, it refers to maximum throttle opening at maximum speed. For electronically controlled or other engines with multiple possible fueling rates, wide-open throttle also means the maximum fueling rate at maximum throttle opening under test conditions.

[70 FR 40507, July 13, 2005]

§ 1051.805 What symbols, acronyms, and abbreviations does this part use?

The following symbols, acronyms, and abbreviations apply to this part:

°—degrees.
ASTM—American Society for Testing and Materials.
ATV—all-terrain vehicle.
cc—cubic centimeters.
CFR—Code of Federal Regulations.
cm—centimeter.
C—Celsius.
CO—carbon monoxide.
CO_2—carbon dioxide.

EPA—Environmental Protection Agency.
F—Fahrenheit.
g—grams.
g/gal/day—grams per gallon per test day.
g/m^2/day—grams per meter-square per test day.
HC—hydrocarbon.
Hg—mercury.
hr—hours.
km—kilometer.
kW—kilowatt.
LPG—liquefied petroleum gas.
m—meters.
mm—millimeters.
mW—milliwatts.
NARA—National Archives and Records Administration.
NMHC—nonmethane hydrocarbons.
NO_X—oxides of nitrogen (NO and NO_X).
psig—pounds per square inches of gauge pressure.
rpm—revolutions per minute.
SAE—Society of Automotive Engineers.
SI—spark-ignition.
THC—total hydrocarbon.
THCE—total hydrocarbon equivalent.
U.S.C.—United States Code.

[67 FR 68347, Nov. 8, 2002, as amended at 70 FR 40510, July 13, 2005]

§ 1051.810 What materials does this part reference?

Documents listed in this section have been incorporated by reference into this part. The Director of the Federal Register approved the incorporation by reference as prescribed in 5 U.S.C. 552(a) and 1 CFR part 51. Anyone may inspect copies at the U.S. EPA, Air and Radiation Docket and Information Center, 1301 Constitution Ave., NW., Room B102, EPA West Building, Washington, DC 20460 or at the National Archives and Records Administration (NARA). For information on the availability of this material at NARA, call 202–741–6030, or go to: *http://www.archives.gov/federal_register/code_of_federal_regulations/ibr_locations.html.*

(a) *ASTM material.* Table 1 of this section lists material from the American Society for Testing and Materials that we have incorporated by reference. The first column lists the number and name of the material. The second column lists the sections of this part where we reference it. Anyone may purchase copies of these materials from the American Society for Testing and Materials, 100 Barr Harbor Dr., P.O. Box C700, West Conshohocken, PA 19428 or *www.astm.com.* Table 1 follows:

TABLE 1 OF § 1051.810—ASTM MATERIALS

Document number and name	Part 1051 reference
ASTM D471–98, Standard Test Method for Rubber Property—Effect of Liquids	1051.501
ASTM D814–95 (reapproved 2000), Standard Test Method for Rubber Property Vapor Transmission of Volatile Liquids	1051.245

(b) *SAE material.* Table 2 of this section lists material from the Society of Automotive Engineering that we have incorporated by reference. The first column lists the number and name of the material. The second column lists the sections of this part where we reference it. Anyone may purchase copies of these materials from the Society of Automotive Engineers, 400 Commonwealth Drive, Warrendale, PA 15096 or *www.sae.org.* Table 2 follows:

TABLE 2 OF § 1051.810—SAE MATERIALS

Document number and name	Part 1051 reference
SAE J30, Fuel and Oil Hoses, June 1998	1051.245, 1051.501
SAE J1930, Electrical/Electronic Systems Diagnostic Terms, Definitions, Abbreviations, and Acronyms, May 1998	1051.135
SAE J2260, Nonmetallic Fuel System Tubing with One or More Layers, November 1996	1051.245

[70 FR 40510, July 13, 2005]

§ 1051.815 What provisions apply to confidential information?

(a) Clearly show what you consider confidential by marking, circling, bracketing, stamping, or some other method.

(b) We will store your confidential information as described in 40 CFR part 2. Also, we will disclose it only as specified in 40 CFR part 2. This applies both to any information you send us and to any information we collect from inspections, audits, or other site visits.

(c) If you send us a second copy without the confidential information, we will assume it contains nothing confidential whenever we need to release information from it.

(d) If you send us information without claiming it is confidential, we may make it available to the public without further notice to you, as described in 40 CFR 2.204.

[70 FR 40511, July 13, 2005]

§ 1051.820 How do I request a hearing?

(a) You may request a hearing under certain circumstances, as described elsewhere in this part. To do this, you must file a written request, including a description of your objection and any supporting data, within 30 days after we make a decision.

(b) For a hearing you request under the provisions of this part, we will approve your request if we find that your request raises a substantial factual issue.

(c) If we agree to hold a hearing, we will use the procedures specified in 40 CFR part 1068, subpart G.

[70 FR 40511, July 13, 2005]

PART 1065—ENGINE-TESTING PROCEDURES

Subpart A—Applicability and General Provisions

Sec.
1065.1 Applicability.
1065.2 Submitting information to EPA under this part.
1065.5 Overview of this part 1065 and its relationship to the standard-setting part.
1065.10 Other procedures.
1065.12 Approval of alternate procedures.
1065.15 Overview of procedures for laboratory and field testing.
1065.20 Units of measure and overview of calculations.
1065.25 Recordkeeping.

Subpart B—Equipment Specifications

1065.101 Overview.
1065.110 Work inputs and outputs, accessory work, and operator demand.
1065.120 Fuel properties and fuel temperature and pressure.
1065.122 Engine cooling and lubrication.
1065.125 Engine intake air.
1065.127 Exhaust gas recirculation.
1065.130 Engine exhaust.
1065.140 Dilution for gaseous and PM constituents.
1065.145 Gaseous and PM probes, transfer lines, and sampling system components.
1065.150 Continuous sampling.
1065.170 Batch sampling for gaseous and PM constituents.
1065.190 PM-stabilization and weighing environments for gravimetric analysis.
1065.195 PM-stabilization environment for in-situ analyzers.

Subpart C—Measurement Instruments

1065.201 Overview and general provisions.
1065.202 Data updating, recording, and control.
1065.205 Performance specifications for measurement instruments.

MEASUREMENT OF ENGINE PARAMETERS AND AMBIENT CONDITIONS

1065.210 Work input and output sensors.
1065.215 Pressure transducers, temperature sensors, and dewpoint sensors.

FLOW-RELATED MEASUREMENTS

1065.220 Fuel flow meter.
1065.225 Intake-air flow meter.
1065.230 Raw exhaust flow meter.
1065.240 Dilution air and diluted exhaust flow meters.
1065.245 Sample flow meter for batch sampling.
1065.248 Gas divider.

CO AND CO_2 MEASUREMENTS

1065.250 Nondispersive infra-red analyzer.

HYDROCARBON MEASUREMENTS

1065.260 Flame ionization detector.
1065.265 Nonmethane cutter.
1065.267 Gas chromatograph.

NO_X MEASUREMENTS

1065.270 Chemiluminescent detector.
1065.272 Nondispersive ultraviolet analyzer.

O_2 MEASUREMENTS

1065.280 Paramagnetic and magnetopneumatic O_2 detection analyzers.

AIR-TO-FUEL RATIO MEASUREMENTS

1065.284 Zirconia (ZrO_2) analyzer.

PM MEASUREMENTS

1065.290 PM gravimetric balance.
1065.295 PM inertial balance for field-testing analysis.

Subpart D—Calibrations and Verifications

1065.301 Overview and general provisions.
1065.303 Summary of required calibration and verifications
1065.305 Verifications for accuracy, repeatability, and noise.
1065.307 Linearity verification.
1065.308 Continuous gas analyzer system-response and updating-recording verification.
1065.309 Continuous gas analyzer uniform response verification.

MEASUREMENT OF ENGINE PARAMETERS AND AMBIENT CONDITIONS

1065.310 Torque calibration.
1065.315 Pressure, temperature, and dew-point calibration.

FLOW-RELATED MEASUREMENTS

1065.320 Fuel-flow calibration.
1065.325 Intake-flow calibration.
1065.330 Exhaust-flow calibration.
1065.340 Diluted exhaust flow (CVS) calibration.
1065.341 CVS and batch sampler verification (propane check).
1065.345 Vacuum-side leak verification.

CO AND CO_2 MEASUREMENTS

1065.350 H_2O interference verification for CO_2 NDIR analyzers.
1065.355 H_2O and CO_2 interference verification for CO NDIR analyzers.

HYDROCARBON MEASUREMENTS

1065.360 FID optimization and verification.
1065.362 Non-stoichiometric raw exhaust FID O_2 interference verification.
1065.365 Nonmethane cutter penetration fractions.

NO_X MEASUREMENTS

1065.370 CLD CO_2 and H_2O quench verification.
1065.372 NDUV analyzer HC and H_2O interference verification.
1065.376 Chiller NO_2 penetration.
1065.378 NO_2-to-NO converter conversion verification.

PM MEASUREMENTS

1065.390 PM balance verifications and weighing process verification.
1065.395 Inertial PM balance verifications.

Subpart E—Engine Selection, Preparation, and Maintenance

1065.401 Test engine selection.
1065.405 Test engine preparation and maintenance.
1065.410 Maintenance limits for stabilized test engines.
1065.415 Durability demonstration.

Subpart F—Performing an Emission Test in the Laboratory

1065.501 Overview.
1065.510 Engine mapping.
1065.512 Duty cycle generation.
1065.514 Cycle-validation criteria.
1065.520 Pre-test verification procedures and pre-test data collection.
1065.525 Engine starting, restarting, and shutdown.
1065.530 Emission test sequence.
1065.545 Validation of proportional flow control for batch sampling.
1065.550 Gas analyzer range validation, drift validation, and drift correction.
1065.590 PM sample preconditioning and tare weighing.
1065.595 PM sample post-conditioning and total weighing.

Subpart G—Calculations and Data Requirements

1065.601 Overview.
1065.602 Statistics.
1065.610 Duty cycle generation.
1065.630 1980 international gravity formula.
1065.640 Flow meter calibration calculations.
1065.642 SSV, CFV, and PDP molar flow rate calculations.
1065.645 Amount of water in an ideal gas.
1065.650 Emission calculations.
1065.655 Chemical balances of fuel, intake air, and exhaust.
1065.659 Removed water correction.
1065.660 THC and NMHC determination.
1065.665 THCE and NMHCE determination.
1065.66 Dilution air background emission correction.
1065.670 NO_X intake-air humidity and temperature corrections.
1065.672 Drift correction.
1065.675 CLD quench verification calculations.
1065.690 Buoyancy correction for PM sample media.

1065.695 Data requirements.

Subpart H—Engine Fluids, Test Fuels, Analytical Gases and Other Calibration Standards

1065.701 General requirements for test fuels.
1065.703 Distillate diesel fuel.
1065.705 Residual fuel. [Reserved]
1065.710 Gasoline.
1065.715 Natural gas.
1065.720 Liquefied petroleum gas.
1065.740 Lubricants.
1065.745 Coolants.
1065.750 Analytical Gases.
1065.790 Mass standards.

Subpart I—Testing with Oxygenated Fuels

1065.801 Applicability.
1065.805 Sampling system.
1065.845 Response factor determination.
1065.850 Calculations.

Subpart J—Field Testing and Portable Emission Measurement Systems

1065.901 Applicability.
1065.905 General provisions.
1065.910 PEMS auxiliary equipment for field testing.
1065.915 PEMS instruments.
1065.920 PEMS Calibrations and verifications.
1065.925 PEMS preparation for field testing.
1065.930 Engine starting, restarting, and shutdown.
1065.935 Emission test sequence for field testing.
1065.940 Emission calculations.

Subpart K—Definitions and Other Reference Information

1065.1001 Definitions.
1065.1005 Symbols, abbreviations, acronyms, and units of measure.
1065.1010 Reference materials.

AUTHORITY: 42 U.S.C. 7401–7671q.

SOURCE: 70 FR 40516, July 13, 2005, unless otherwise noted.

Subpart A—Applicability and General Provisions

§ 1065.1 Applicability.

(a) This part describes the procedures that apply to testing we require for the following engines or for vehicles using the following engines:

(1) Model year 2010 and later heavy-duty highway engines we regulate under 40 CFR part 86. For earlier model years, manufacturers may use the test procedures in this part or those specified in 40 CFR part 86, subpart N, according to § 1065.10.

(2) Land-based nonroad diesel engines we regulate under 40 CFR part 1039.

(3) Large nonroad spark-ignition engines we regulate under 40 CFR part 1048.

(4) Vehicles we regulate under 40 CFR part 1051 (such as snowmobiles and off-highway motorcycles) based on engine testing. See 40 CFR part 1051, subpart F, for standards and procedures that are based on vehicle testing.

(5) Stationary compression-ignition engines certified using the provisions of 40 CFR part 1039, as indicated under 40 CFR part 60, subpart IIII, the standard-setting part for these engines.

(b) The procedures of this part may apply to other types of engines, as described in this part and in the standard-setting part.

(c) This part is addressed to you as a manufacturer, but it applies equally to anyone who does testing for you.

(d) Paragraph (a) of this section identifies the parts of the CFR that define emission standards and other requirements for particular types of engines. In this part, we refer to each of these other parts generically as the ''standard-setting part.'' For example, 40 CFR part 1051 is always the standard-setting part for snowmobiles.

(e) Unless we specify otherwise, the terms ''procedures'' and ''test procedures'' in this part include all aspects of engine testing, including the equipment specifications, calibrations, calculations, and other protocols and procedural specifications needed to measure emissions.

(f) For vehicles subject to this part and regulated under vehicle-based standards, use good engineering judgment to interpret the term ''engine'' in this part to include vehicles where appropriate.

(g) For additional information regarding these test procedures, visit our Web site at *www.epa.gov*, and in particular *http://www.epa.gov/otaq/testingregs.htm*.

[69 FR 39213, June 29, 2004, as amended at 71 FR 39185, July 11, 2006]

§ 1065.2 Submitting information to EPA under this part.

(a) You are responsible for statements and information in your applications for certification, requests for approved procedures, selective enforcement audits, laboratory audits, production-line test reports, field test reports, or any other statements you make to us related to this part 1065.

(b) In the standard-setting part and in 40 CFR 1068.101, we describe your obligation to report truthful and complete information and the consequences of failing to meet this obligation. See also 18 U.S.C. 1001 and 42 U.S.C. 7413(c)(2).

(c) We may void any certificates associated with a submission of information if we find that you intentionally submitted false, incomplete, or misleading information. For example, if we find that you intentionally submitted incomplete information to mislead EPA when requesting approval to use alternate test procedures, we may void the certificates for all engines families certified based on emission data collected using the alternate procedures.

(d) We may require an authorized representative of your company to approve and sign the submission, and to certify that all of the information submitted is accurate and complete.

(e) See 40 CFR 1068.10 for provisions related to confidential information. Note however that under 40 CFR 2.301, emission data is generally not eligible for confidential treatment.

§ 1065.5 Overview of this part 1065 and its relationship to the standard-setting part.

(a) This part specifies procedures that apply generally to testing various categories of engines. See the standard-setting part for directions in applying specific provisions in this part for a particular type of engine. Before using this part's procedures, read the standard-setting part to answer at least the following questions:

(1) What duty cycles must I use for laboratory testing?

(2) Should I warm up the test engine before measuring emissions, or do I need to measure cold-start emissions during a warm-up segment of the duty cycle?

(3) Which exhaust gases do I need to measure?

(4) Does testing require full-flow dilute sampling? Is raw sampling prohibited? Is partial-flow sampling prohibited?

(5) Do any unique specifications apply for test fuels?

(6) What maintenance steps may I take before or between tests on an emission-data engine?

(7) Do any unique requirements apply to stabilizing emission levels on a new engine?

(8) Do any unique requirements apply to test limits, such as ambient temperatures or pressures?

(9) Is field testing required, and are there different emission standards or procedures that apply to field testing?

(10) Are there any emission standards specified at particular engine-operating conditions or ambient conditions?

(11) Do any unique requirements apply for durability testing?

(b) The testing specifications in the standard-setting part may differ from the specifications in this part. In cases where it is not possible to comply with both the standard-setting part and this part, you must comply with the specifications in the standard-setting part. The standard-setting part may also allow you to deviate from the procedures of this part for other reasons.

(c) The following table shows how this part divides testing specifications into subparts:

This subpart . . .	Describes these specifications or procedures . . .
Subpart A	Applicability and general provisions.
Subpart B	Equipment for testing.
Subpart C	Measurement instruments for testing.
Subpart D	Calibration and performance verifications for measurement systems.
Subpart E	How to prepare engines for testing, including service accumulation.
Subpart F	How to run an emission test.
Subpart G	Test procedure calculations.
Subpart H	Fuels, engine fluids, analytical gases, and other calibration standards for testing.
Subpart I	Special procedures related to oxygenated fuels.
Subpart J	How to test with portable emission measurement systems (PEMS).
Subpart K	Definitions, abbreviations, and other reference information.

§ 1065.10 Other procedures.

(a) *Your testing.* The procedures in this part apply for all testing you do to show compliance with emission standards, with certain exceptions listed in this section. In some other sections in this part, we allow you to use other procedures (such as less precise or less accurate procedures) if they do not affect your ability to show that your engines comply with the applicable emission standards. This generally requires emission levels to be far enough below the applicable emission standards so that any errors caused by greater imprecision or inaccuracy do not affect your ability to state unconditionally that the engines meet all applicable emission standards.

(b) *Our testing.* These procedures generally apply for testing that we do to determine if your engines comply with applicable emission standards. We may perform other testing as allowed by the Act.

(c) *Exceptions.* We may allow or require you to use procedures other than those specified in this part in the following cases, which may apply to laboratory testing, field testing, or both. We intend to publicly announce when we allow or require such exceptions. All of the test procedures noted here as exceptions to the specified procedures are considered generically as ''other procedures.'' Note that the terms ''special procedures'' and ''alternate procedures'' have specific meanings; ''special procedures'' are those allowed by § 1065.10(c)(2) and ''alternate procedures'' are those allowed by § 1065.10(c)(7).

(1) The objective of the procedures in this part is to produce emission measurements equivalent to those that would result from measuring emissions during in-use operation using the same engine configuration as installed in a vehicle. However, in unusual circumstances these procedures may result in measurements that do not represent in-use operation. You must notify us if good engineering judgment indicates that the specified procedures cause unrepresentative emission measurements for your engines. Note that you need not notify us of unrepresentative aspects of the test procedure if measured emissions are equivalent to in-use emissions. This provision does not obligate you to pursue new information regarding the different ways your engine might operate in use, nor does it obligate you to collect any other in-use information to verify whether or not these test procedures are representative of your engine's in-use operation. If you notify us of unrepresentative procedures under this paragraph (c)(1), we will cooperate with you to establish whether and how the procedures should be appropriately changed to result in more representative measurements. While the provisions of this paragraph (c)(1) allow us to be responsive to issues as they arise, we would generally work toward making these testing changes generally applicable through rulemaking. We will allow reasonable lead time for compliance with any resulting change in procedures. We will consider the following factors in determining the importance of pursuing changes to the procedures:

(i) Whether supplemental emission standards or other requirements in the standard-setting part address the type of operation of concern or otherwise prevent inappropriate design strategies.

(ii) Whether the unrepresentative aspect of the procedures affect your ability to show compliance with the applicable emission standards.

(iii) The extent to which the established procedures require the use of emission-control technologies or strategies that are expected to ensure a comparable degree of emission control under the in-use operation that differs from the specified procedures.

(2) You may request to use special procedures if your engine cannot be tested using the specified procedures. We will approve your request if we determine that it would produce emission measurements that represent in-use operation and we determine that it can be used to show compliance with the requirements of the standard-setting part. The following situations illustrate examples that may require special procedures:

(i) Your engine cannot operate on the specified duty cycle. In this case, tell us in writing why you cannot satisfactorily test your engine using this

part's procedures and ask to use a different approach.

(ii) Your electronic control module requires specific input signals that are not available during dynamometer testing. In this case, tell us in writing what signals you will simulate, such as vehicle speed or transmission signals, and explain why these signals are necessary for representative testing.

(3) In a given model year, you may use procedures required for later model year engines without request. If you upgrade your testing facility in stages, you may rely on a combination of procedures for current and later model year engines as long as you can ensure, using good engineering judgment, that the combination you use for testing does not affect your ability to show compliance with the applicable emission standards.

(4) In a given model year, you may ask to use procedures allowed for earlier model year engines. We will approve this only if you show us that using the procedures allowed for earlier model years does not affect your ability to show compliance with the applicable emission standards.

(5) You may ask to use emission data collected using other procedures, such as those of the California Air Resources Board or the International Organization for Standardization. We will approve this only if you show us that using these other procedures does not affect your ability to show compliance with the applicable emission standards.

(6) During the 12 months following the effective date of any change in the provisions of this part 1065, you may ask to use data collected using procedures specified in the previously applicable version of this part 1065. This paragraph (c)(6) does not restrict the use of carryover certification data otherwise allowed by the standard-setting part.

(7) You may request to use alternate procedures that are equivalent to allowed procedures, or more accurate or more precise than allowed procedures. You may request to use a particular device or method for laboratory testing even though it was originally designed for field testing. The following provisions apply to requests for alternate procedures:

(i) *Applications.* Follow the instructions in § 1065.12.

(ii) *Submission.* Submit requests in writing to the Designated Compliance Officer.

(iii) *Notification.* We may approve your request by telling you directly, or we may issue guidance announcing our approval of a specific alternate procedure, which would make additional requests for approval unnecessary.

(d) If we require you to request approval to use other procedures under paragraph (c) of this section, you may not use them until we approve your request.

§ 1065.12 Approval of alternate procedures.

(a) To get approval for an alternate procedure under § 1065.10(c), send the Designated Compliance Officer an initial written request describing the alternate procedure and why you believe it is equivalent to the specified procedure. We may approve your request based on this information alone, or, as described in this section, we may ask you to submit to us in writing supplemental information showing that your alternate procedure is consistently and reliably at least as accurate and repeatable as the specified procedure.

(b) We may make our approval under this section conditional upon meeting other requirements or specifications. We may limit our approval, for example, to certain time frames, specific duty cycles, or specific emission standards. Based upon any supplemental information we receive after our initial approval, we may amend a previously approved alternate procedure to extend, limit, or discontinue its use. We intend to publicly announce alternate procedures that we approve.

(c) Although we will make every effort to approve only alternate procedures that completely meet our requirements, we may revoke our approval of an alternate procedure if new information shows that it is significantly not equivalent to the specified procedure.

If we do this, we will grant time to switch to testing using an allowed procedure, considering the following factors:

(1) The cost, difficulty, and availability to switch to a procedure that we allow.

(2) The degree to which the alternate procedure affects your ability to show that your engines comply with all applicable emission standards.

(3) Any relevant factors considered in our initial approval.

(d) If we do not approve your proposed alternate procedure based on the information in your initial request, we may ask you to send the following information to fully evaluate your request:

(1) *Theoretical basis.* Give a brief technical description explaining why you believe the proposed alternate procedure should result in emission measurements equivalent to those using the specified procedure. You may include equations, figures, and references. You should consider the full range of parameters that may affect equivalence. For example, for a request to use a different NO_X measurement procedure, you should theoretically relate the alternate detection principle to the specified detection principle over the expected concentration ranges for NO, NO_2, and interference gases. For a request to use a different PM measurement procedure, you should explain the principles by which the alternate procedure quantifies particulate mass similarly to the specified procedures. For any proportioning or integrating procedure, such as a partial-flow dilution system, you should compare the alternate procedure's theoretical response to the expected response of the specified procedures.

(2) *Technical description.* Describe briefly any hardware or software needed to perform the alternate procedure. You may include dimensioned drawings, flowcharts, schematics, and component specifications. Explain any necessary calculations or other data manipulation.

(3) *Procedure execution.* Describe briefly how to perform the alternate procedure and recommend a level of training an operator should have to achieve acceptable results.

Summarize the installation, calibration, operation, and maintenance procedures in a step-by-step format. Describe how any calibration is performed using NIST-traceable standards or other similar standards we approve. Calibration must be specified by using known quantities and must not be specified as a comparison with other allowed procedures.

(4) *Data-collection techniques.* Compare measured emission results using the proposed alternate procedure and the specified procedure, as follows:

(i) Both procedures must be calibrated independently to NIST-traceable standards or to other similar standards we approve.

(ii) Include measured emission results from all applicable duty cycles. Measured emission results should show that the test engine meets all applicable emission standards according to specified procedures.

(iii) Use statistical methods to evaluate the emission measurements, such as those described in paragraph (e) of this section.

(e) We may give you specific directions regarding methods for statistical analysis, or we may approve other methods that you propose. Absent any other directions from us, use a *t*-test and an *F*-test calculated according to § 1065.602 to evaluate whether your proposed alternate procedure is equivalent to the specified procedure. We recommend that you consult a statistician if you are unfamiliar with these statistical tests. Perform the tests as follows:

(1) Repeat measurements for all applicable duty cycles at least seven times for each procedure. You may use laboratory duty cycles to evaluate field-testing procedures.

Be sure to include all available results to evaluate the precision and accuracy of the proposed alternate procedure, as described in § 1065.2.

(2) Demonstrate the accuracy of the proposed alternate procedure by showing that it passes a two-sided *t*-test. Use an unpaired *t*-test, unless you show that a paired t-test is appropriate under both of the following provisions:

(i) For paired data, the population of the paired differences from which you sampled paired differences must be independent. That is, the probability of any given value of one paired difference is unchanged by knowledge of the value of another paired difference.

For example, your paired data would violate this requirement if your series of paired differences showed a distinct increase or decrease that was dependent on the time at which they were sampled.

(ii) For paired data, the population of paired differences from which you sampled the paired differences must have a normal (i.e., Gaussian) distribution. If the population of paired difference is not normally distributed, consult a statistician for a more appropriate statistical test, which may include transforming the data with a mathematical function or using some kind of nonparametric test.

(3) Show that t is less than the critical t value, t_{crit}, tabulated in § 1065.602, for the following confidence intervals:

(i) 90% for a proposed alternate procedure for laboratory testing.

(ii) 95% for a proposed alternate procedure for field testing.

(4) Demonstrate the precision of the proposed alternate procedure by showing that it passes an F-test. Use a set of at least seven samples from the reference procedure and a set of at least seven samples from the alternate procedure to perform an F-test. The sets must meet the following requirements:

(i) Within each set, the values must be independent. That is, the probability of any given value in a set must be unchanged by knowledge of another value in that set. For example, your data would violate this requirement if a set showed a distinct increase or decrease that was dependent upon the time at which they were sampled.

(ii) For each set, the population of values from which you sampled must have a normal (i.e., Gaussian) distribution. If the population of values is not normally distributed, consult a statistician for a more appropriate statistical test, which may include transforming the data with a mathematical function or using some kind of nonparametric test.

(iii) The two sets must be independent of each other. That is, the probability of any given value in one set must be unchanged by knowledge of another value in the other set. For example, your data would violate this requirement if one value in a set showed a distinct increase or decrease that was dependent upon a value in the other set. Note that a trend of emission changes from an engine would not violate this requirement.

(iv) If you collect paired data for the paired t-test in paragraph (e)(2) in this section, use caution when selecting sets from paired data for the F-test. If you do this, select sets that do not mask the precision of the measurement procedure. We recommend selecting such sets only from data collected using the same engine, measurement instruments, and test cycle.

(5) Show that F is less than the critical F value, F_{crit}, tabulated in § 1065.602. If you have several F-test results from several sets of data, show that the mean F-test value is less than the mean critical F value for all the sets. Evaluate F_{crit}, based on the following confidence intervals:

(i) 90% for a proposed alternate procedure for laboratory testing.

(ii) 95% for a proposed alternate procedure for field testing.

§ 1065.15 Overview of procedures for laboratory and field testing.

This section outlines the procedures to test engines that are subject to emission standards.

(a) In the standard-setting part, we set brake-specific emission standards in g/(kW·hr) (or g/(hp·hr)), for the following constituents:

(1) Total oxides of nitrogen, NO_X.

(2) Hydrocarbons (HC), which may be expressed in the following ways:

(i) Total hydrocarbons, THC.

(ii) Nonmethane hydrocarbons, NMHC, which results from subtracting methane (CH_4) from THC.

(iii) Total hydrocarbon-equivalent, THCE, which results from adjusting THC mathematically to be equivalent on a carbon-mass basis.

(iv) Nonmethane hydrocarbon-equivalent, NMHCE, which results from adjusting NMHC mathematically to be equivalent on a carbon-mass basis.

(3) Particulate mass, PM.

(4) Carbon monoxide, CO.

(b) Note that some engines are not subject to standards for all the emission constituents identified in paragraph (a) of this section.

(c) We set brake-specific emission standards over test intervals, as follows:

(1) *Engine operation.* Engine operation is specified over a test interval. A test interval is the time over which an engine's total mass of emissions and its total work are determined. Refer to the standard-setting part for the specific test intervals that apply to each engine. Testing may involve measuring emissions and work during the following types of engine operation:

(i) *Laboratory testing.* Under this type of testing, you determine brake-specific emissions for duty-cycle testing by using an engine dynamometer in a laboratory. This typically consists of one or more test intervals, each defined by a duty cycle, which is a sequence of speeds and torques that an engine must follow. If the standard-setting part allows it, you may also simulate field testing by running on an engine dynamometer in a laboratory.

(ii) *Field testing.* This type of testing consists of normal in-use engine operation while an engine is installed in a vehicle. The standard-setting part specifies how test intervals are defined for field testing.

(2) *Constituent determination.* Determine the total mass of each constituent over a test interval by selecting from the following methods:

(i) *Continuous sampling.* In continuous sampling, measure the constituent's concentration continuously from raw or dilute exhaust. Multiply this concentration by the continuous (raw or dilute) flow rate at the emission sampling location to determine the constituent's flow rate. Sum the constituent's flow rate continuously over the test interval. This sum is the total mass of the emitted constituent.

(ii) *Batch sampling.* In batch sampling, continuously extract and store a sample of raw or dilute exhaust for later measurement. Extract a sample proportional to the raw or dilute exhaust flow rate. You may extract and store a proportional sample of exhaust in an appropriate container, such as a bag, and then measure HC, CO, and NO_X concentrations in the container after the test interval. You may deposit PM from proportionally extracted exhaust onto an appropriate substrate, such as a filter. In this case, divide the PM by the amount of filtered exhaust to calculate the PM concentration. Multiply batch sampled concentrations by the total (raw or dilute) flow from which it was extracted during the test interval. This product is the total mass of the emitted constituent.

(iii) *Combined sampling.* You may use continuous and batch sampling simultaneously during a test interval, as follows:

(A) You may use continuous sampling for some constituents and batch sampling for others.

(B) You may use continuous and batch sampling for a single constituent, with one being a redundant measurement. See § 1065.201 for more information on redundant measurements.

(3) *Work determination.* Determine work over a test interval by one of the following methods:

(i) *Speed and torque.* For laboratory testing, synchronously multiply speed and brake torque to calculate instantaneous values for engine brake power. Sum engine brake power over a test interval to determine total work.

(ii) *Fuel consumed and brake-specific fuel consumption.* Directly measure fuel consumed or calculate it with chemical balances of the fuel, intake air, and exhaust. To calculate fuel consumed by a chemical balance, you must also measure either intake-air flow rate or exhaust flow rate. Divide the fuel consumed during a test interval by the brake-specific fuel consumption to determine work over the test interval. For laboratory testing, calculate the brake-specific fuel consumption using fuel consumed and speed and torque over a test interval. For field testing, refer to the standard-setting part and § 1065.915 for selecting an appropriate value for brake-specific fuel consumption.

(d) Refer to § 1065.650 for calculations to determine brake-specific emissions.

(e) The following figure illustrates the allowed measurement configurations described in this part 1065:

Figure 1 of §1065.15—Default test procedures and other specified procedures.

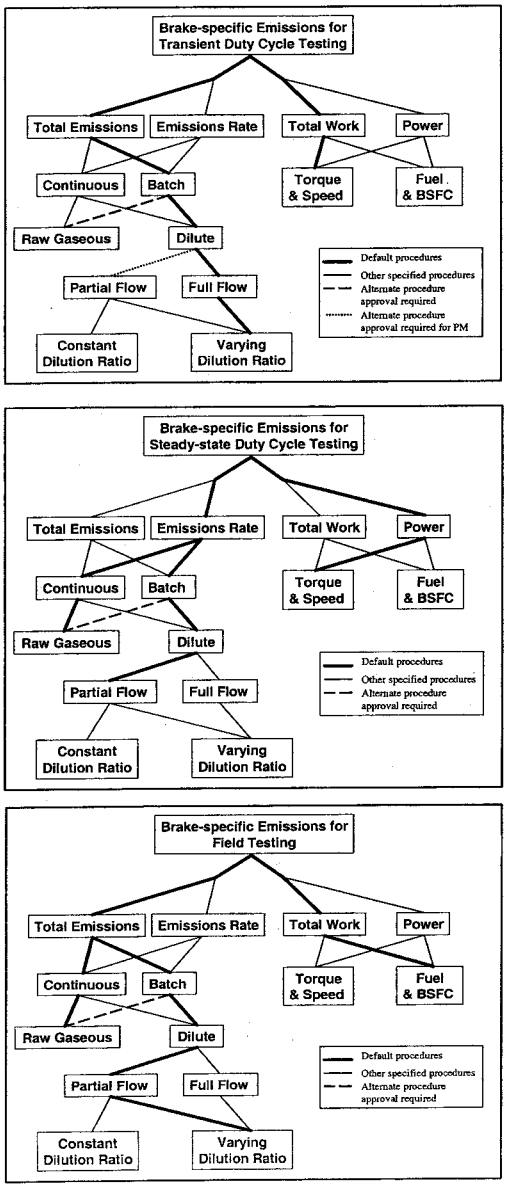

§ 1065.20 Units of measure and overview of calculations.

(a) *System of units.* The procedures in this part generally follow the International System of Units (SI), as detailed in NIST Special Publication 811, 1995 Edition, ''Guide for the Use of the International System of Units (SI),'' which we incorporate by reference in § 1065.1010. This document is available on the Internet at *http://physics.nist.gov/Pubs/SP811/contents.html*. Note the following exceptions:

(1) We designate rotational frequency, f_n, of an engine's crankshaft in revolutions per minute (rev/min), rather than the SI unit of reciprocal seconds (1/s). This is based on the commonplace use of rev/min in many engine dynamometer laboratories. Also, we use the symbol f_n to identify rotational frequency in rev/min, rather than the SI convention of using *n*. This avoids confusion with our usage of the symbol *n* for a molar quantity.

(2) We designate brake-specific emissions in grams per kilowatt-hour (g/(kW·hr)), rather than the SI unit of grams per megajoule (g/MJ). This is based on the fact that engines are generally subject to emission standards expressed in g/kW·hr. If we specify engine standards in grams per horsepower·hour (g/(hp·hr)) in the standard-setting part, convert units as specified in paragraph (d) of this section.

(3) We designate temperatures in units of degrees Celsius (°C) unless a calculation requires an absolute temperature. In that case, we designate temperatures in units of Kelvin (K). For conversion purposes throughout this part, 0 °C equals 273.15 K.

(b) *Concentrations.* This part does not rely on amounts expressed in parts per million or similar units. Rather, we express such amounts in the following SI units:

(1) For ideal gases, µmol/mol, formerly ppm (volume).

(2) For all substances, $\mu m^3/m^3$, formerly ppm (volume).

(3) For all substances, mg/kg, formerly ppm (mass).

(c) *Absolute pressure.* Measure absolute pressure directly or calculate it as the sum of atmospheric pressure plus a differential pressure that is referenced to atmospheric pressure.

(d) *Units conversion.* Use the following conventions to convert units:

(1) *Testing.* You may record values and perform calculations with other units. For testing with equipment that involves other units, use the conversion factors from NIST Special Publication 811, as described in paragraph (a) of this section.

(2) *Humidity.* In this part, we identify humidity levels by specifying dew-point, which is the temperature at which pure water begins to condense out of air. Use humidity conversions as described in § 1065.645.

(3) *Emission standards.* If your standard is in g/(hp·hr) units, convert kW to hp before any rounding by using the conversion factor of 1 hp (550 ft·lbf/s) = 0.7456999 kW. Round the final value for comparison to the applicable standard.

(e) *Rounding.* Unless the standard-setting part specifies otherwise, round only final values, not intermediate values. Round values to the number of significant digits necessary to match the number of decimal places of the applicable standard or specification. For information not related to standards or specifications, use good engineering judgment to record the appropriate number of significant digits.

(f) *Interpretation of ranges.* In this part, we specify ranges such as ''±10% of maximum pressure'', ''(40 to 50) kPa'', or ''(30 ±10) kPa''. Interpret a range as a tolerance unless we explicitly identify it as an accuracy, repeatability, linearity, or noise specification. See § 1065.1001 for the definition of Tolerance.

(g) *Scaling of specifications with respect to a standard.* Because this part 1065 is applicable to a wide range of engines and emission standards, some of the specifications in this part are scaled with respect to an engine's emission standard or maximum power. This ensures that the specification will be adequate to determine compliance, but not overly burdensome by requiring unnecessarily high-precision equipment. Many of these specifications are given with respect to a ''flow-weighted mean'' that is expected at the standard. Flow-weighted mean is the mean of a quantity after it is weighted proportional to a corresponding flow rate. For example, if a gas concentration is

measured continuously from the raw exhaust of an engine, its flow-weighted mean concentration is the sum of the products of each recorded concentration times its respective exhaust flow rate, divided by the sum of the recorded flow rates. As another example, the bag concentration from a CVS system is the same as the flow-weighted mean concentration, because the CVS system itself flow-weights the bag concentration. Refer to § 1065.602 for information needed to estimate and calculate flow-weighted means.

§ 1065.25 Recordkeeping.

The procedures in this part include various requirements to record data or other information. Refer to the standard-setting part regarding recordkeeping requirements. If the standard-setting part does not specify recordkeeping requirements, store these records in any format and on any media and keep them readily available for one year after you send an associated application for certification, or one year after you generate the data if they do not support an application for certification. You must promptly send us organized, written records in English if we ask for them. We may review them at any time.

Subpart B—Equipment Specifications

§ 1065.101 Overview.

(a) This subpart specifies equipment, other than measurement instruments, related to emission testing. The provisions of this subpart apply for all testing in laboratories. See subpart J of this part to determine which of the provisions of this subpart apply for field testing. This includes three broad categories of equipment—dynamometers, engine fluid systems (such as fuel and intake-air systems), and emission-sampling hardware.

(b) Other related subparts in this part identify measurement instruments (subpart C), describe how to evaluate the performance of these instruments (subpart D), and specify engine fluids and analytical gases (subpart H).

(c) Subpart J of this part describes additional equipment that is specific to field testing.

(d) Figures 1 and 2 of this section illustrate some of the possible configurations of laboratory equipment. These figures are schematics only; we do not require exact conformance to them. Figure 1 of this section illustrates the equipment specified in this subpart and gives some references to sections in this subpart. Figure 2 of this section illustrates some of the possible configurations of a full-flow dilution, constant-volume sampling (CVS) system. Not all possible CVS configurations are shown.

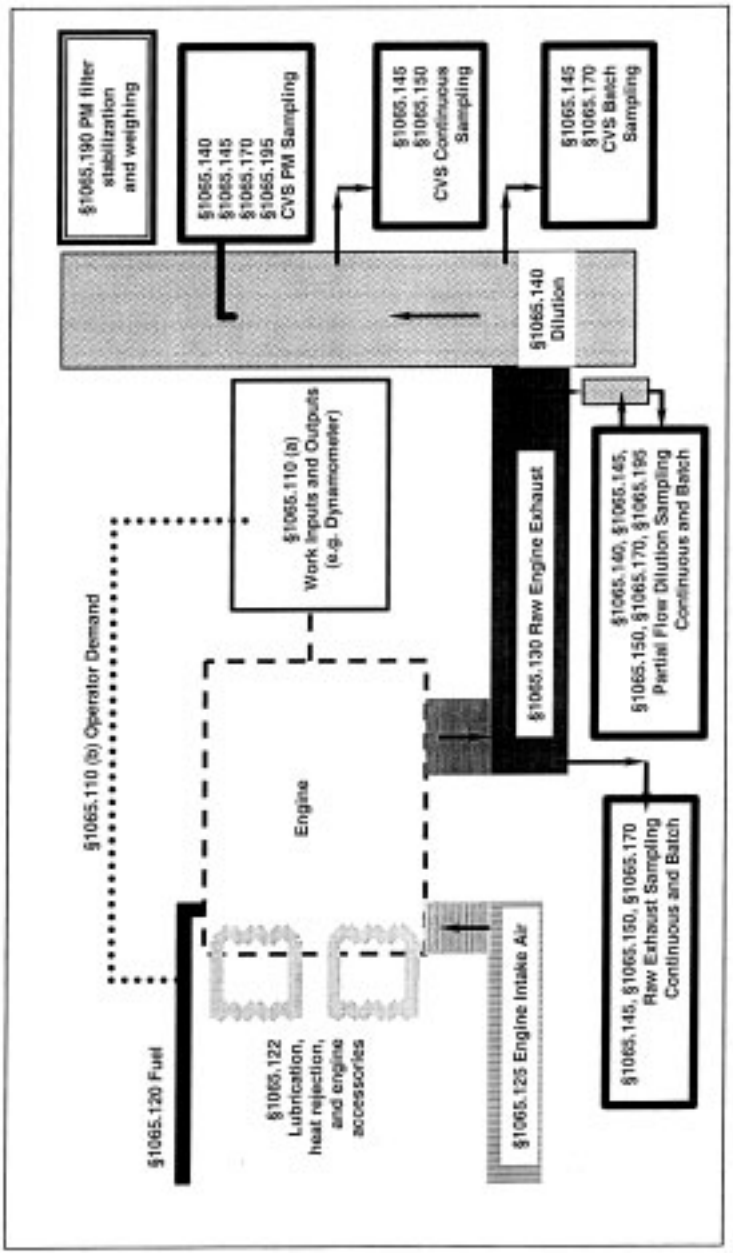

Figure 1 of §1065.101—Engine dynamometer laboratory equipment.

Figure 2 of §1065.101—Examples of some full-flow dilution sampling configurations.

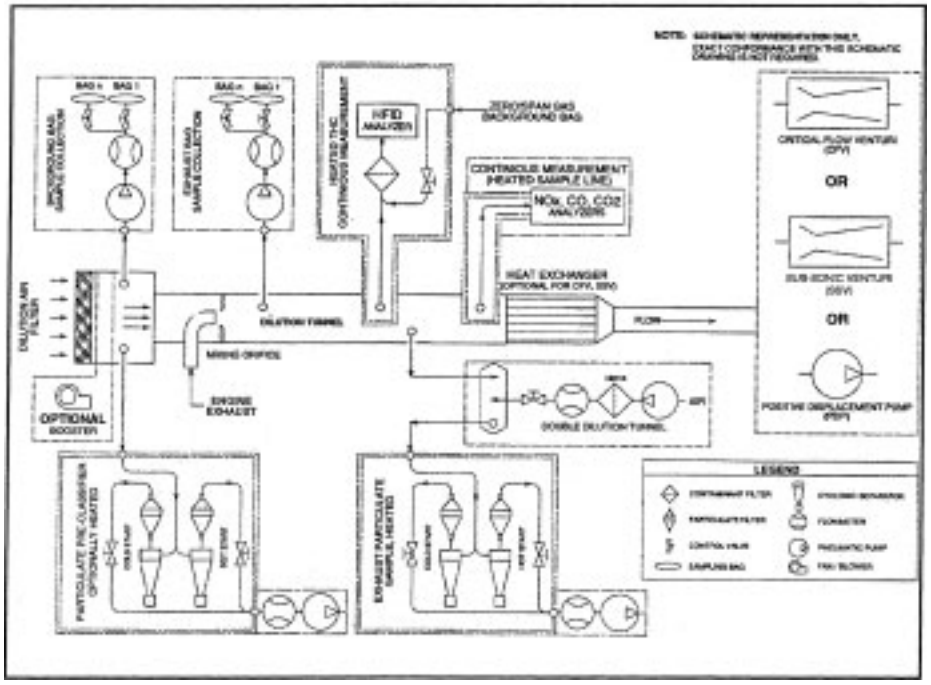

§ 1065.110 Work inputs and outputs, accessory work, and operator demand.

(a) *Work*. Use good engineering judgment to simulate all engine work inputs and outputs as they typically would operate in use. Account for work inputs and outputs during an emission test by measuring them; or, if they are small, you may show by engineering analysis that disregarding them does not affect your ability to determine the net work output by more than ±0.5% of the net reference work output over the test interval. Use equipment to simulate the specific types of work, as follows:

(1) *Shaft work*. Use an engine dynamometer that is able to meet the cycle-validation criteria in §1065.514 over each applicable duty cycle.

(i) You may use eddy-current and water-brake dynamometers for any testing that does not involve engine motoring, which is identified by negative torque commands in a reference duty cycle. See the standard setting part for reference duty cycles that are applicable to your engine.

(ii) You may use alternating-current or direct-current motoring dynamometers for any type of testing.

(iii) You may use one or more dynamometers.

(2) *Electrical work*. Use one or more of the following to simulate electrical work:

(i) Use storage batteries or capacitors that are of the type and capacity installed in use.

(ii) Use motors, generators, and alternators that are of the type and capacity installed in use.

(iii) Use a resistor load bank to simulate electrical loads.

(3) *Pump, compressor, and turbine work*. Use pumps, compressors, and turbines that are of the type and capacity

installed in use. Use working fluids that are of the same type and thermodynamic state as normal in-use operation.

(b) *Laboratory work inputs.* You may supply any laboratory inputs of work to the engine. For example, you may supply electrical work to the engine to operate a fuel system, and as another example you may supply compressor work to the engine to actuate pneumatic valves. We may ask you to show by engineering analysis your accounting of laboratory work inputs to meet the criterion in paragraph (a) of this section.

(c) *Engine accessories.* You must either install or account for the work of engine accessories required to fuel, lubricate, or heat the engine, circulate coolant to the engine, or to operate aftertreatment devices. Operate the engine with these accessories installed or accounted for during all testing operations, including mapping. If these accessories are not powered by the engine during a test, account for the work required to perform these functions from the total work used in brake-specific emission calculations. For air-cooled engines only, subtract externally powered fan work from total work. We may ask you to show by engineering analysis your accounting of engine accessories to meet the criterion in paragraph (a) of this section.

(d) *Engine starter.* You may install a production-type starter.

(e) *Operator demand for shaft work.* Command the operator demand and the dynamometer(s) to follow the prescribed duty cycle with set points for engine speed and torque at 5 Hz (or more frequently) for transient testing or 1 Hz (or more frequently) for steady-state testing. Use a mechanical or electronic input to control operator demand such that the engine is able to meet the validation criteria in § 1065.514 over each applicable duty cycle. Record feedback values for engine speed and torque at 5 Hz or more frequently for evaluating performance relative to the cycle validation criteria. Using good engineering judgment, you may improve control of operator demand by altering on-engine speed and torque controls. However, if these changes result in unrepresentative testing, you must notify us and recommend other test procedures under § 1065.10(c)(1).

§ 1065.120 Fuel properties and fuel temperature and pressure.

(a) Use fuels as specified in subpart H of this part.

(b) If the engine manufacturer specifies fuel temperature and pressure tolerances and the location where they are to be measured, then measure the fuel temperature and pressure at the specified location to show that you are within these tolerances throughout testing.

(c) If the engine manufacturer does not specify fuel temperature and pressure tolerances, use good engineering judgment to set and control fuel temperature and pressure in a way that represents typical in-use fuel temperatures and pressures.

§ 1065.122 Engine cooling and lubrication.

(a) *Engine cooling.* Cool the engine during testing so its intake-air, oil, coolant, block, and head temperatures are within their expected ranges for normal operation. You may use laboratory auxiliary coolers and fans.

(1) If you use laboratory auxiliary fans you must account for work input to the fan(s) according to § 1065.110.

(2) See § 1065.125 for more information related to intake-air cooling.

(3) See § 1065.127 for more information related to exhaust gas recirculation cooling.

(4) Measure temperatures at the manufacturer-specified locations. If the manufacturer does not specify temperature measurement locations, then use good engineering judgment to monitor intake-air, oil, coolant, block, and head temperatures to ensure that they are in their expected ranges for normal operation.

(b) *Forced cooldown.* You may install a forced cooldown system for an engine and an exhaust aftertreatment device according to § 1065.530(a)(1).

(c) *Lubricating oil.* Use lubricating oils specified in § 1065.740.

(d) *Coolant.* For liquid-cooled engines, use coolant as specified in § 1065.745.

§ 1065.125 Engine intake air.

(a) Use the intake-air system installed on the engine or one that represents a typical in-use configuration. This includes the charge-air cooling and exhaust gas recirculation systems.

(b) Measure temperature, humidity, and atmospheric pressure near the entrance to the engine's air filter, or at the inlet to the air intake system for engines that have no air filter. You may use a shared atmospheric pressure meter as long as your equipment for handling intake air maintains ambient pressure where you test the engine within ±1 kPa of the shared atmospheric pressure. You may use a shared humidity measurement for intake air as long as your equipment for handling intake air maintains dewpoint where you test the engine to within ±0.5 °C of the shared humidity measurement.

(c) Use an air-intake restriction that represents production engines. Make sure the intake-air restriction is between the manufacturer's specified maximum for a clean filter and the manufacturer's specified maximum allowed. Measure the static differential pressure of the restriction at the location and at the speed and torque set points specified by the manufacturer. If the manufacturer does not specify a location, measure this pressure upstream any turbocharger or exhaust gas recirculation system connection to the intake air system. If the manufacturer does not specify speed and torque points, measure this pressure while the engine outputs maximum power. As the manufacturer, you are liable for emission compliance for all values up to the maximum restriction you specify for a particular engine.

(d) This paragraph (d) includes provisions for simulating charge-air cooling in the laboratory. This approach is described in paragraph (d)(1) of this section. Limits on using this approach are described in paragraphs (d)(2) and (3) of this section.

(1) Use a charge-air cooling system with a total intake-air capacity that represents production engines' in-use installation. Maintain coolant conditions as follows:

(i) Maintain a coolant temperature of at least 20 °C at the inlet to the charge-air cooler throughout testing.

(ii) At maximum engine power, set the coolant flow rate to achieve an air temperature within ±5 °C of the value specified by the manufacturer at the charge-air cooler outlet. Measure the air-outlet temperature at the location specified by the manufacturer. Use this coolant flow rate set point throughout testing.

(2) Using a constant flow rate as described in paragraph (d)(1)(ii) of this section may result in unrepresentative overcooling of the intake air. If this causes any regulated emission to decrease, then you may still use this approach, but only if the effect on emissions is smaller than the degree to which you meet the applicable emission standards. If the effect on emissions is larger than the degree to which you meet the applicable emission standards, you must use a variable flow rate that controls intake-air temperatures to be representative of in-use operation.

(3) This approach does not apply for field testing. You may not correct measured emission levels from field testing to account for any differences caused by the simulated cooling in the laboratory.

§ 1065.127 Exhaust gas recirculation.

Use the exhaust gas recirculation (EGR) system installed with the engine or one that represents a typical in-use configuration. This includes any applicable EGR cooling devices.

§ 1065.130 Engine exhaust.

(a) *General.* Use the exhaust system installed with the engine or one that represents a typical in-use configuration. This includes any applicable aftertreatment devices.

(b) *Aftertreatment configuration.* If you do not use the exhaust system installed with the engine, configure any aftertreatment devices as follows:

(1) Position any aftertreatment device so its distance from the nearest exhaust manifold flange or turbocharger outlet is within the range specified by the engine manufacturer in the application for certification. If this distance is not specified, position aftertreatment devices to represent typical in-use vehicle configurations.

(2) You may use laboratory exhaust tubing upstream of any aftertreatment device that is of diameter(s) typical of in-use configurations. If you use laboratory exhaust tubing upstream of any aftertreatment device, position each aftertreatment device according to paragraph (b)(1) of this section.

(c) *Sampling system connections.* Connect an engine's exhaust system to any raw sampling location or dilution stage, as follows:

(1) Minimize laboratory exhaust tubing lengths and use a total length of laboratory tubing of no more than 10 m or 50 outside diameters, whichever is greater. If laboratory exhaust tubing consists of several different outside tubing diameters, count the number of diameters of length of each individual diameter, then sum all the diameters to determine the total length of exhaust tubing in diameters. Use the mean outside diameter of any converging or diverging sections of tubing. Use outside hydraulic diameters of any noncircular sections.

(2) You may install short sections of flexible laboratory exhaust tubing at any location in the engine or laboratory exhaust systems. You may use up to a combined total of 2 m or 10 outside diameters of flexible exhaust tubing.

(3) Insulate any laboratory exhaust tubing downstream of the first 25 outside diameters of length.

(4) Use laboratory exhaust tubing materials that are smooth-walled, electrically conductive, and not reactive with exhaust constituents. Stainless steel is an acceptable material.

(5) We recommend that you use laboratory exhaust tubing that has either a wall thickness of less than 2 mm or is air gap-insulated to minimize temperature differences between the wall and the exhaust.

(d) *In-line instruments.* You may insert instruments into the laboratory exhaust tubing, such as an in-line smoke meter. If you do this, you may leave a length of up to 5 outside diameters of laboratory exhaust tubing uninsulated on each side of each instrument, but you must leave a length of no more than 25 outside diameters of laboratory exhaust tubing uninsulated in total, including any lengths adjacent to in-line instruments.

(e) *Grounding.* Electrically ground the entire exhaust system.

(f) *Forced cooldown.* You may install a forced cooldown system for an exhaust aftertreatment device according to § 1065.530(a)(1)(i).

(g) *Exhaust restriction.* Use an exhaust restriction that represents the performance of production engines. Make sure the exhaust restriction set point is either (80 to 100) % of the maximum exhaust restriction specified by the manufacturer; or if the maximum is 5 kPa or less, make sure the set point is no less than 1.0 kPa from the maximum. For example, if the maximum back pressure is 4.5 kPa, do not use an exhaust restriction set point that is less than 3.5 kPa. Measure and set this pressure at the location and at the speed, torque and aftertreatment set points specified by the manufacturer. As the manufacturer, you are liable for emission compliance for all values up to the maximum restriction you specify for a particular engine.

(h) *Open crankcase emissions.* If the standard-setting part requires measuring open crankcase emissions, you may either measure open crankcase emissions separately using a method that we approve in advance, or route open crankcase emissions directly into the exhaust system for emission measurement as follows:

(1) Use laboratory tubing materials that are smooth-walled, electrically conductive, and not reactive with crankcase emissions. Stainless steel is an acceptable material.

Minimize tube lengths. We also recommend using heated or thin-walled or air gap-insulated tubing to minimize temperature differences between the wall and the crankcase emission constituents.

(2) Minimize the number of bends in the laboratory crankcase tubing and maximize the radius of any unavoidable bend.

(3) Use laboratory crankcase exhaust tubing that meets the engine manufacturer's specifications for crankcase back pressure.

(4) Connect the crankcase exhaust tubing into the raw exhaust downstream of any aftertreatment system, downstream of any installed exhaust restriction, and sufficiently upstream

of any sample probes to ensure complete mixing with the engine's exhaust before sampling. Extend the crankcase exhaust tube into the free stream of exhaust to avoid boundary-layer effects and to promote mixing. You may orient the crankcase exhaust tube's outlet in any direction relative to the raw exhaust flow.

§ 1065.140 Dilution for gaseous and PM constituents.

(a) *General.* You may dilute exhaust with ambient air, synthetic air, or nitrogen that is at least 15 °C. Note that the composition of the diluent affects some gaseous emission measurement instruments' response to emissions. We recommend diluting exhaust at a location as close as possible to the location where ambient air dilution would occur in use.

(b) *Dilution-air conditions and background concentrations.* Before a diluent is mixed with exhaust, you may precondition it by increasing or decreasing its temperature or humidity. You may also remove constituents to reduce their background concentrations. The following provisions apply to removing constituents or accounting for background concentrations:

(1) You may measure constituent concentrations in the diluent and compensate for background effects on test results. See § 1065.650 for calculations that compensate for background concentrations.

(2) Either measure these background concentrations the same way you measure diluted exhaust constituents, or measure them in a way that does not affect your ability to demonstrate compliance with the applicable standards. For example, you may use the following simplifications for background sampling:

(i) You may disregard any proportional sampling requirements.

(ii) You may use unheated gaseous sampling systems.

(iii) You may use unheated PM sampling systems only if we approve it in advance.

(iv) You may use continuous sampling if you use batch sampling for diluted emissions.

(v) You may use batch sampling if you use continuous sampling for diluted emissions.

(3) For removing background PM, we recommend that you filter all dilution air, including primary full-flow dilution air, with high-efficiency particulate air (HEPA) filters that have an initial minimum collection efficiency specification of 99.97% (see § 1065.1001 for procedures related to HEPA-filtration efficiencies). Ensure that HEPA filters are installed properly so that background PM does not leak past the HEPA filters. If you choose to correct for background PM without using HEPA filtration, demonstrate that the background PM in the dilution air contributes less than 50% to the net PM collected on the sample filter.

(c) *Full-flow dilution; constant-volume sampling (CVS).* You may dilute the full flow of raw exhaust in a dilution tunnel that maintains a nominally constant volume flow rate, molar flow rate or mass flow rate of diluted exhaust, as follows:

(1) *Construction.* Use a tunnel with inside surfaces of 300 series stainless steel. Electrically ground the entire dilution tunnel. We recommend a thin-walled and insulated dilution tunnel to minimize temperature differences between the wall and the exhaust gases.

(2) *Pressure control.* Maintain static pressure at the location where raw exhaust is introduced into the tunnel within 1.2 kPa of atmospheric pressure. You may use a booster blower to control this pressure. If you test an engine using more careful pressure control and you show by engineering analysis or by test data that you require this level of control to demonstrate compliance at the applicable standards, we will maintain the same level of static pressure control when we test that engine.

(3) *Mixing.* Introduce raw exhaust into the tunnel by directing it downstream along the centerline of the tunnel. You may introduce a fraction of dilution air radially from the tunnel's inner surface to minimize exhaust interaction with the tunnel walls. You may configure the system with turbulence generators such as orifice plates or fins to achieve good mixing. We recommend a minimum Reynolds number,

$Re^{\#}$, of 4000 for the diluted exhaust stream, where $Re^{\#}$ is based on the inside diameter of the dilution tunnel. $Re^{\#}$ is defined in § 1065.640.

(4) *Flow measurement preconditioning.* You may condition the diluted exhaust before measuring its flow rate, as long as this conditioning takes place downstream of any sample probes, as follows:

(i) You may use flow straighteners, pulsation dampeners, or both of these.

(ii) You may use a filter.

(iii) You may use a heat exchanger to control the temperature upstream of any flow meter. Note paragraph (c)(6) of this section regarding aqueous condensation.

(5) *Flow measurement.* Section 1065.240 describes measurement instruments for diluted exhaust flow.

(6) *Aqueous condensation.* You may either prevent aqueous condensation throughout the dilution tunnel or you may measure humidity at the flow meter inlet. Calculations in § 1065.645 and § 1065.650 account for either method of addressing humidity in the diluted exhaust. Note that preventing aqueous condensation involves more than keeping pure water in a vapor phase (see § 1065.1001).

(7) *Flow compensation.* Maintain nominally constant molar, volumetric or mass flow of diluted exhaust. You may maintain nominally constant flow by either maintaining the temperature and pressure at the flow meter or by directly controlling the flow of diluted exhaust. You may also directly control the flow of proportional samplers to maintain proportional sampling. For an individual test, validate proportional sampling as described in § 1065.545.

(d) *Partial-flow dilution (PFD).* Except as specified in this paragraph (d), you may dilute a partial flow of raw or previously diluted exhaust before measuring emissions. § 1065.240 describes PFD-related flow measurement instruments. PFD may consist of constant or varying dilution ratios as described in paragraphs (d)(2) and (3) of this section. An example of a constant dilution ratio PFD is a ''secondary dilution PM'' measurement system. An example of a varying dilution ratio PFD is a ''bag mini-diluter'' or BMD.

(1) *Applicability.* (i) You may not use PFD if the standard-setting part prohibits it.

(ii) You may use PFD to extract a proportional raw exhaust sample for any batch or continuous PM emission sampling over any transient duty cycle only if we have explicitly approved it according to § 1065.10 as an alternative procedure to the specified procedure for full-flow CVS.

(iii) You may use PFD to extract a proportional raw exhaust sample for any batch or continuous gaseous emission sampling.

(iv) You may use PFD to extract a proportional raw exhaust sample for any batch or continuous PM emission sampling over any steady-state duty cycle or its ramped-modal cycle (RMC) equivalent.

(v) You may use PFD to extract a proportional raw exhaust sample for any batch or continuous field-testing.

(vi) You may use PFD to extract a proportional diluted exhaust sample from a CVS for any batch or continuous emission sampling.

(vii) You may use PFD to extract a constant raw or diluted exhaust sample for any continuous emission sampling.

(2) *Constant dilution-ratio PFD.* Do one of the following for constant dilution-ratio PFD:

(i) Dilute an already proportional flow. For example, you may do this as a way of performing secondary dilution from a CVS tunnel to achieve temperature control for PM sampling.

(ii) Continuously measure constituent concentrations. For example, you might dilute to precondition a sample of raw exhaust to control its temperature, humidity, or constituent concentrations upstream of continuous analyzers. In this case, you must take into account the dilution ratio before multiplying the continuous concentration by the sampled exhaust flow rate.

(iii) Extract a proportional sample from the constant dilution ratio PFD system. For example, you might use a variable-flow pump to proportionally fill a gaseous storage medium such as a bag from a PFD system. In this case, the proportional sampling must meet the same specifications as varying dilution ratio PFD in paragraph (d)(3) of this section.

(3) *Varying dilution-ratio PFD.* All the following provisions apply for varying dilution-ratio PFD:

(i) Use a control system with sensors and actuators that can maintain proportional sampling over intervals as short as 200 ms (i.e., 5 Hz control).

(ii) For control input, you may use any sensor output from one or more measurements; for example, intake-air flow, fuel flow, exhaust flow, engine speed, and intake manifold temperature and pressure.

(iii) Account for any emission transit time in the PFD system.

(iv) You may use preprogrammed data if they have been determined for the specific test site, duty cycle, and test engine from which you dilute emissions.

(v) We recommend that you run practice cycles to meet the validation criteria in §1065.545. Note that you must validate every emission test by meeting the validation criteria with the data from that specific test, not from practice cycles or other tests.

(vi) You may not use a PFD system that requires preparatory tuning or calibration with a CVS or with the emission results from a CVS. Rather, you must be able to independently calibrate the PFD.

(e) *Dilution and temperature control of PM samples.* Dilute PM samples at least once upstream of transfer lines. You may dilute PM samples upstream of a transfer line using full-flow dilution, or partial-flow dilution immediately downstream of a PM probe. Control sample temperature to a (47 ±5) °C tolerance, as measured anywhere within 20 cm upstream or downstream of the PM storage media (such as a filter). Measure this temperature with a bare-wire junction thermocouple with wires that are (0.500 ±0.025) mm diameter, or with another suitable instrument that has equivalent performance. Heat or cool the PM sample primarily by dilution.

§1065.145 Gaseous and PM probes, transfer lines, and sampling system components.

(a) *Continuous and batch sampling.* Determine the total mass of each constituent with continuous or batch sampling, as described in §1065.15(c)(2). Both types of sampling systems have probes, transfer lines, and other sampling system components that are described in this section.

(b) *Gaseous and PM sample probes.* A probe is the first fitting in a sampling system. It protrudes into a raw or diluted exhaust stream to extract a sample, such that its inside and outside surfaces are in contact with the exhaust. A sample is transported out of a probe into a transfer line, as described in paragraph (c) of this section. The following provisions apply to probes:

(1) *Probe design and construction.* Use sample probes with inside surfaces of 300 series stainless steel or, for raw exhaust sampling, use a nonreactive material capable of withstanding raw exhaust temperatures. Locate sample probes where constituents are mixed to their mean sample concentration. Take into account the mixing of any crankcase emissions that may be routed into the raw exhaust. Locate each probe to minimize interference with the flow to other probes. We recommend that all probes remain free from influences of boundary layers, wakes, and eddies—especially near the outlet of a raw-exhaust tailpipe where unintended dilution might occur. Make sure that purging or back-flushing of a probe does not influence another probe during testing. You may use a single probe to extract a sample of more than one constituent as long as the probe meets all the specifications for each constituent.

(2) *Gaseous sample probes.* Use either single-port or multi-port probes for sampling gaseous emissions. You may orient these probes in any direction relative to the raw or diluted exhaust flow. For some probes, you must control sample temperatures, as follows:

(i) For probes that extract NO_X from diluted exhaust, control the probe's wall temperature to prevent aqueous condensation.

(ii) For probes that extract hydrocarbons for NMHC or NMHCE analysis from the diluted exhaust of compression-ignition engines, 2-stroke spark-ignition engines, or 4-stroke spark-ignition engines below 19 kW, maintain a probe wall temperature tolerance of (191 ±11) °C.

(3) *PM sample probes.* Use PM probes with a single opening at the end. Orient PM probes to face directly upstream. If you shield a PM probe's opening with a PM pre-classifier such as a hat, you may not use the preclassifier we specify in paragraph (d)(4)(i) of this section. We recommend sizing the inside diameter of PM probes to approximate isokinetic sampling at the expected mean flow rate.

(c) *Transfer lines.* You may use transfer lines to transport an extracted sample from a probe to an analyzer, storage medium, or dilution system. Minimize the length of all transfer lines by locating analyzers, storage media, and dilution systems as close to probes as practical. We recommend that you minimize the number of bends in transfer lines and that you maximize the radius of any unavoidable bend. Avoid using 90° elbows, tees, and cross-fittings in transfer lines. Where such connections and fittings are necessary, take steps, using good engineering judgment, to ensure that you meet the temperature tolerances in this paragraph (c). This may involve measuring temperature at various locations within transfer lines and fittings. You may use a single transfer line to transport a sample of more than one constituent, as long as the transfer line meets all the specifications for each constituent. The following construction and temperature tolerances apply to transfer lines:

(1) *Gaseous samples.* Use transfer lines with inside surfaces of 300 series stainless steel, PTFE, Viton™, or any other material that you demonstrate has better properties for emission sampling. For raw exhaust sampling, use a non-reactive material capable of withstanding raw exhaust temperatures. You may use in-line filters if they do not react with exhaust constituents and if the filter and its housing meet the same temperature requirements as the transfer lines, as follows:

(i) For NO_X transfer lines upstream of either an NO_2-to-NO converter that meets the specifications of § 1065.378 or a chiller that meets the specifications of § 1065.376, maintain a sample temperature that prevents aqueous condensation.

(ii) For THC transfer lines for testing compression-ignition engines, 2-stroke spark-ignition engines, or 4-stroke spark-ignition engines below 19 kW, maintain a wall temperature tolerance throughout the entire line of (191 ±11) °C. If you sample from raw exhaust, you may connect an unheated, insulated transfer line directly to a probe. Design the length and insulation of the transfer line to cool the highest expected raw exhaust temperature to no lower than 191 °C, as measured at the transfer line's outlet.

(2) *PM samples.* We recommend heated transfer lines or a heated enclosure to minimize temperature differences between transfer lines and exhaust constituents. Use transfer lines that are inert with respect to PM and are electrically conductive on the inside surfaces. We recommend using PM transfer lines made of 300 series stainless steel. Electrically ground the inside surface of PM transfer lines.

(d) *Optional sample-conditioning components for gaseous sampling.* You may use the following sample-conditioning components to prepare gaseous samples for analysis, as long you do not install or use them in a way that adversely affects your ability to show that your engines comply with all applicable gaseous emission standards.

(1) *NO_2-to-NO converter.* You may use an NO_2-to-NO converter that meets the efficiency-performance check specified in § 1065.378 at any point upstream of a NO_X analyzer, sample bag, or other storage medium.

(2) *Sample dryer.* You may use either type of sample dryer described in this paragraph (d)(2) to decrease the effects of water on gaseous emission measurements. You may not use a chemical dryer, or used dryers upstream of PM sample filters.

(i) *Osmotic-membrane.* You may use an osmotic-membrane dryer upstream of any gaseous analyzer or storage medium, as long as it meets the temperature specifications in paragraph (c)(1) of this section. Because osmotic-membrane dryers may deteriorate after prolonged exposure to certain exhaust constituents, consult with the membrane manufacturer regarding your application before incorporating an osmotic-membrane dryer. Monitor the

dewpoint, T_{dew}, and absolute pressure, p_{total}, downstream of an osmotic-membrane dryer. You may use continuously recorded values of T_{dew} and p_{total} in the amount of water calculations specified in § 1065.645. If you do not continuously record these values, you may use their peak values observed during a test or their alarm setpoints as constant values in the calculations specified in § 1065.645. You may also use a nominal p_{total}, which you may estimate as the dryer's lowest absolute pressure expected during testing.

(ii) *Thermal chiller.* You may use a thermal chiller upstream of some gas analyzers and storage media. You may not use a thermal chiller upstream of a THC measurement system for compression-ignition engines, 2-stroke spark-ignition engines, or 4-stroke spark-ignition engines below 19 kW. If you use a thermal chiller upstream of an NO_2-to-NO converter or in a sampling system without an NO_2-to-NO converter, the chiller must meet the NO_2 loss-performance check specified in § 1065.376. Monitor the dewpoint, T_{dew}, and absolute pressure, p_{total}, downstream of a thermal chiller. You may use continuously recorded values of T_{dew} and p_{total} in the emission calculations specified in § 1065.650. If you do not continuously record these values, you may use their peak values observed during a test or their high alarm setpoints as constant values in the amount of water calculations specified in § 1065.645. You may also use a nominal p_{total}, which you may estimate as the dryer's lowest absolute pressure expected during testing. If it is valid to assume the degree of saturation in the thermal chiller, you may calculate T_{dew} based on the known chiller efficiency and continuous monitoring of chiller temperature, $T_{chiller}$. If you do not continuously record values of $T_{chiller}$, you may use its peak value observed during a test, or its alarm setpoint, as a constant value to determine a constant amount of water according to § 1065.645. If it is valid to assume that $T_{chiller}$ is equal to T_{dew}, you may use $T_{chiller}$ in lieu of T_{dew} according to § 1065.645. If we ask for it, you must show by engineering analysis or by data the validity of any assumptions allowed by this paragraph (d)(2)(ii).

(3) *Sample pumps.* You may use sample pumps upstream of an analyzer or storage medium for any gas. Use sample pumps with inside surfaces of 300 series stainless steel, PTFE, or any other material that you demonstrate has better properties for emission sampling. For some sample pumps, you must control temperatures, as follows:

(i) If you use a NO_X sample pump upstream of either an NO_2-to-NO converter that meets § 1065.378 or a chiller that meets § 1065.376, it must be heated to prevent aqueous condensation.

(ii) For testing compression-ignition engines, 2-stroke spark-ignition engines, or 4-stroke compression ignition engines below 19 kW, if you use a THC sample pump upstream of a THC analyzer or storage medium, its inner surfaces must be heated to a tolerance of (191 ±11) °C.

(e) *Optional sample-conditioning components for PM sampling.* You may use the following sample-conditioning components to prepare PM samples for analysis, as long you do not install or use them in a way that adversely affects your ability to show that your engines comply with the applicable PM emission standards. You may condition PM samples to minimize positive and negative biases to PM results, as follows:

(1) *PM preclassifier.* You may use a PM preclassifier to remove large-diameter particles. The PM preclassifier may be either an inertial impactor or a cyclonic separator. It must be constructed of 300 series stainless steel. The preclassifier must be rated to remove at least 50% of PM at an aerodynamic diameter of 10 μm and no more than 1% of PM at an aerodynamic diameter of 1 μm over the range of flow rates for which you use it. Follow the preclassifier manufacturer's instructions for any periodic servicing that may be necessary to prevent a buildup of PM. Install the preclassifier in the dilution system downstream of the last dilution stage. Configure the preclassifier outlet with a means of bypassing any PM sample media so the preclassifier flow may be stabilized before starting a test. Locate PM sample media within 50 cm downstream of the preclassifier's exit. You may not use this preclassifier if you use a PM probe

that already has a preclassifier. For example, if you use a hat-shaped preclassifier that is located immediately upstream of the probe in such a way that it forces the sample flow to change direction before entering the probe, you may not use any other preclassifier in your PM sampling system.

(2) *Other components.* You may request to use other PM conditioning components upstream of a PM preclassifier, such as components that condition humidity or remove gaseous-phase hydrocarbons from the diluted exhaust stream. You may use such components only if we approve them under § 1065.10.

§ 1065.150 Continuous sampling.

You may use continuous sampling techniques for measurements that involve raw or dilute sampling. Make sure continuous sampling systems meet the specifications in § 1065.145. Make sure continuous analyzers meet the specifications in subparts C and D of this part.

§ 1065.170 Batch sampling for gaseous and PM constituents.

Batch sampling involves collecting and storing emissions for later analysis. Examples of batch sampling include collecting and storing gaseous emissions in a bag and collecting and storing PM on a filter. You may use batch sampling to store emissions that have been diluted at least once in some way, such as with CVS, PFD, or BMD. You may use batch-sampling to store undiluted emissions only if we approve it as an alternate procedure under § 1065.10.

(a) *Sampling methods.* For batch sampling, extract the sample at a rate proportional to the exhaust flow. If you extract from a constant-volume flow rate, sample at a constant-volume flow rate. If you extract from a varying flow rate, vary the sample rate in proportion to the varying flow rate. Validate proportional sampling after an emission test as described in § 1065.545. Use storage media that do not change measured emission levels (either up or down). For example, do not use sample bags for storing emissions if the bags are permeable with respect to emissions or if they off-gas emissions. As another example, do not use PM filters that irreversibly absorb or adsorb gases.

(b) *Gaseous sample storage media.* Store gas volumes in sufficiently clean containers that minimally off-gas or allow permeation of gases. Use good engineering judgment to determine acceptable thresholds of storage media cleanliness and permeation. To clean a container, you may repeatedly purge and evacuate a container and you may heat it. Use a flexible container (such as a bag) within a temperature-controlled environment, or use a temperature controlled rigid container that is initially evacuated or has a volume that can be displaced, such as a piston and cylinder arrangement. Use containers meeting the specifications in the following table, noting that you may request to use other container materials under § 1065.10:

TABLE 1 OF § 1065.170—GASEOUS BATCH SAMPLING CONTAINER MATERIALS

Emissions	Engines	
	Compression-ignition, two-stroke spark ignition, 4-stroke spark-ignition <19 kW	All other engines
CO, CO_2, O_2, CH_4, C_2H_6, C_3H_8, NO, NO_2 [1].	Tedlar™,[2] Kynar™,[2] Teflon™,[3] or 300 series stainless steel[3].	Tedlar™,[2] Kynar™,[2] Teflon™,[3] or 300 series stainless steel[3]
THC, NMHC	Teflon™[4] or 300 series stainless steel[4]	Tedlar™,[2] Kynar™,[2] Teflon™,[3] or 300 series stainless steel[3]

[1] As long as you prevent aqueous condensation in storage container.
[2] Up to 40 °C.
[3] Up to 202 °C.
[4] At (191 ±11) °C.

(c) *PM sample media.* Apply the following methods for sampling particulate emissions:

(1) If you use filter-based sampling media to extract and store PM for measurement, your procedure must meet the following specifications:

(i) If you expect that a filter's total surface concentration of PM will exceed 0.473 mm/mm² for a given test interval, you may use filter media with a minimum initial collection efficiency of 98%; otherwise you must use a filter media with a minimum initial collection efficiency of 99.7%. Collection efficiency must be measured as described in ASTM D 2986–95a (incorporated by reference in §1065.1010), though you may rely on the sample-media manufacturer's measurements reflected in their product ratings to show that you meet applicable requirements.

(ii) The filter must be circular, with an overall diameter of 46.50 ±0.6 mm and an exposed diameter of at least 38 mm. See the cassette specifications in paragraph (c)(1)(vi) of this section.

(iii) We highly recommend that you use a pure PTFE filter material that does not have any flow-through support bonded to the back and has an overall thickness of 40 ±20 μm. An inert polymer ring may be bonded to the periphery of the filter material for support and for sealing between the filter cassette parts. We consider Polymethylpentene (PMP) and PTFE inert materials for a support ring, but other inert materials may be used. See the cassette specifications in paragraph (c)(1)(v) of this section. We allow the use of PTFE-coated glass fiber filter material, as long as this filter media selection does not affect your ability to demonstrate compliance with the applicable standards, which we base on a pure PTFE filter material. Note that we will use pure PTFE filter material for compliance testing, and we may require you to use pure PTFE filter material for any compliance testing we require, such as for selective enforcement audits.

(iv) You may request to use other filter materials or sizes under the provisions of §1065.10.

(v) To minimize turbulent deposition and to deposit PM evenly on a filter, use a 12.5° (from center) divergent cone angle to transition from the transfer-line inside diameter to the exposed diameter of the filter face. Use 300 series stainless steel for this transition.

(vi) Maintain sample velocity at the filter face at or below 100 cm/s, where filter face velocity is the measured volumetric flow rate of the sample at the pressure and temperature upstream of the filter face, divided by the filter's exposed area.

(vii) Use a clean cassette designed to the specifications of Figure 1 of §1065.170 and made of any of the following materials: Delrin™, 300 series stainless steel, polycarbonate, acrylonitrile-butadiene-styrene (ABS) resin, or conductive polypropylene. We recommend that you keep filter cassettes clean by periodically washing or wiping them with a compatible solvent applied using a lint-free cloth. Depending upon your cassette material, ethanol (C_2H_5OH) might be an acceptable solvent. Your cleaning frequency will depend on your engine's PM and HC emissions.

(viii) If you store filters in cassettes in an automatic PM sampler, cover or seal individual filter cassettes after sampling to prevent communication of semi-volatile matter from one filter to another.

(2) You may use other PM sample media that we approve under §1065.10, including non-filtering techniques. For example, you might deposit PM on an inert substrate that collects PM using electrostatic, thermophoresis, inertia, diffusion, or some other deposition mechanism, as approved.

Figure 1 of §1065.170—PM filter cassette specifications.

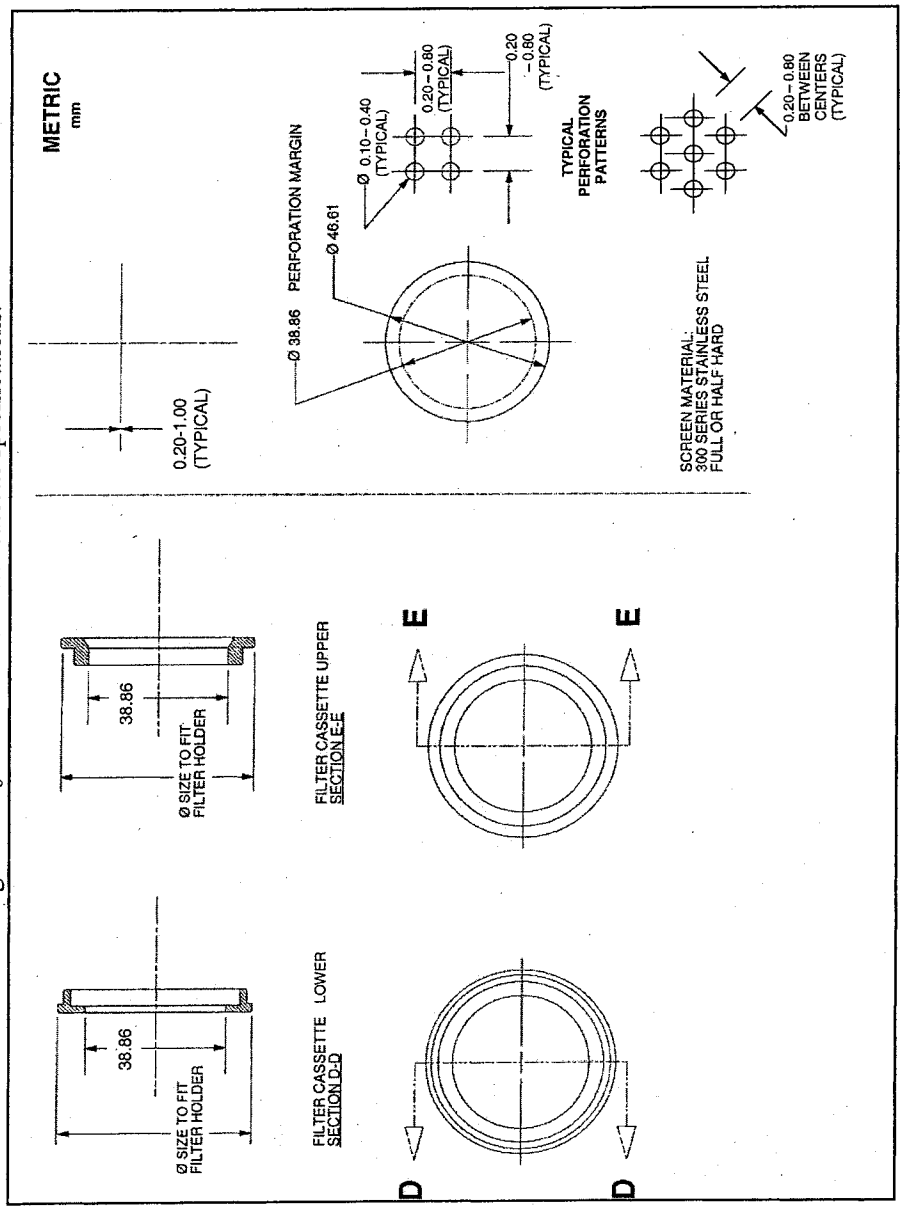

§ 1065.190 PM-stabilization and weighing environments for gravimetric analysis.

(a) This section describes the two environments required to stabilize and weigh PM for gravimetric analysis: the PM stabilization environment, where filters are stored before weighing; and the weighing environment, where the balance is located. The two environments may share a common space.

These volumes may be one or more rooms, or they may be much smaller, such as a glove box or an automated weighing system consisting of one or more countertop-sized environments.

(b) We recommend that you keep both the stabilization and the weighing environments free of ambient contaminants, such as dust, aerosols, or semi-volatile material that could contaminate PM samples. We recommend that these environments conform with an ''as-built'' Class Six clean room specification according to ISO 14644–1 (incorporated by reference in § 1065.1010); however, we also recommend that you deviate from ISO 14644–1 as necessary to minimize air motion that might affect weighing. We recommend maximum air-supply and air-return velocities of 0.05 m/s in the weighing environment.

(c) Verify the cleanliness of the PM-stabilization environment using reference filters, as described in § 1065.390(b).

(d) Maintain the following ambient conditions within the two environments during all stabilization and weighing:

(1) *Ambient temperature and tolerances.* Maintain the weighing environment at a tolerance of (22 ±1) °C. If the two environments share a common space, maintain both environments at a tolerance of (22 ±1) °C. If they are separate, maintain the stabilization environment at a tolerance of (22 ±3) °C.

(2) *Dewpoint.* Maintain a dewpoint of 9.5 °C in both environments. This dewpoint will control the amount of water associated with sulfuric acid (H_2SO_4) PM, such that 1.1368 grams of water will be associated with each gram of H_2SO_4.

(3) *Dewpoint tolerances.* If the expected fraction of sulfuric acid in PM is unknown, we recommend controlling dewpoint at within ±1 °C tolerance. This would limit any dewpoint-related change in PM to less than ±2%, even for PM that is 50% sulfuric acid. If you know your expected fraction of sulfuric acid in PM, we recommend that you select an appropriate dewpoint tolerance for showing compliance with emission standards using the following table as a guide:

TABLE 1 OF § 1065.190—DEWPOINT TOLERANCE AS A FUNCTION OF % PM CHANGE AND % SULFURIC ACID PM

Expected sulfuric acid fraction of PM (percent)	±0.5% PM mass change	±1.0% PM mass change	±2.0% PM mass change
5	±3.0 °C	±6.0 °C	±12 °C
50	±0.30 °C	±0.60 °C	±1.2 °C
100	±0.15 °C	±0.30 °C	±0.60 °C

(e) Verify the following ambient conditions using measurement instruments that meet the specifications in subpart C of this part:

(1) Continuously measure dewpoint and ambient temperature. Use these values to determine if the stabilization and weighing environments have remained within the tolerances specified in paragraph (d) of this section for at least the past 60 min. We recommend that you provide an interlock that automatically prevents the balance from reporting values if either of the environments have not been within the applicable tolerances for the past 60 min.

(2) Continuously measure atmospheric pressure within the weighing environment. You may use a shared atmospheric pressure meter as long as you can show that your equipment for handling the weighing environment air maintains ambient pressure at the balance within ±100 Pa of the shared atmospheric pressure. Provide a means to record the most recent atmospheric pressure when you weigh each PM sample. Use this value to calculate the PM buoyancy correction in § 1065.690.

(f) We recommend that you install a balance as follows:

(1) Install the balance on a vibration-isolation platform to isolate it from external noise and vibration.

(2) Shield the balance from convective airflow with a static-dissipating draft shield that is electrically grounded.

(3) Follow the balance manufacturer's specifications for all preventive maintenance.

(4) Operate the balance manually or as part of an automated weighing system.

(g) Minimize static electric charge in the balance environment, as follows:

(1) Electrically ground the balance.

(2) Use 300 series stainless steel tweezers if PM samples must be handled manually.

(3) Ground tweezers with a grounding strap, or provide a grounding strap for the operator such that the grounding strap shares a common ground with the balance. Make sure grounding straps have an appropriate resistor to protect operators from accidental shock.

(4) Provide a static-electricity neutralizer that is electrically grounded in common with the balance to remove static charge from PM samples, as follows:

(i) You may use radioactive neutralizers such as a Polonium (^{210}Po) source. Replace radioactive sources at the intervals recommended by the neutralizer manufacturer.

(ii) You may use other neutralizers, such as corona-discharge ionizers. If you use a corona-discharge ionizer, we recommend that you monitor it for neutral net charge according to the ionizer manufacturer's recommendations.

(5) We recommend that you use a device to monitor the static charge of PM sample media surfaces.

(6) We recommend that you neutralize PM sample media to within ±2.0 V of neutral.

§ 1065.195 PM-stabilization environment for in-situ analyzers.

(a) This section describes the environment required to determine PM in-situ. For in-situ analyzers, such as an inertial balance, this is the environment within a PM sampling system that surrounds the PM sample media. This is typically a very small volume.

(b) Maintain the environment free of ambient contaminants, such as dust, aerosols, or semi-volatile material that could contaminate PM samples. Filter all air used for stabilization with HEPA filters. Ensure that HEPA filters are installed properly so that background PM does not leak past the HEPA filters.

(c) Maintain the following thermodynamic conditions within the environment before measuring PM:

(1) *Ambient temperature.* Select a nominal ambient temperature, T_{amb}, between (42 and 52) °C. Maintain the ambient temperature within ±1.0 °C of the selected nominal value.

(2) *Dewpoint.* Select a dewpoint, T_{dew}, that corresponds to T_{amb} such that $T_{dew} = (0.95T_{amb} - 11.40)$ °C. The resulting dewpoint will control the amount of water associated with sulfuric acid (H_2SO_4) PM, such that 1.1368 grams of water will be associated with each gram of H_2SO_4. For example, if you select a nominal ambient temperature of 47 °C, set a dewpoint of 33.3 °C.

(3) *Dewpoint tolerance.* If the expected fraction of sulfuric acid in PM is unknown, we recommend controlling dewpoint within ±1.0 °C. This would limit any dewpoint-related change in PM to less than ±2%, even for PM that is 50% sulfuric acid. If you know your expected fraction of sulfuric acid in PM, we recommend that you select an appropriate dewpoint tolerance for showing compliance with emission standards using Table 1 of §1065.190 as a guide:

(4) *Absolute pressure.* Maintain an absolute pressure of (80.000 to 103.325) kPa. Use good engineering judgment to maintain a more stringent tolerance of absolute pressure if your PM measurement instrument requires it.

(d) Continuously measure dewpoint, temperature, and pressure using measurement instruments that meet the PM-stabilization environment specifications in subpart C of this part. Use these values to determine if the in-situ stabilization environment is within the tolerances specified in paragraph (c) of this section. Do not use any PM quantities that are recorded when any of these parameters exceed the applicable tolerances.

(e) If you use an inertial PM balance, we recommend that you install it as follows:

(1) Isolate the balance from any external noise and vibration that is within a frequency range that could affect the balance.

(2) Follow the balance manufacturer's specifications.

(f) If static electricity affects an inertial balance, you may use a static neutralizer, as follows:

(1) You may use a radioactive neutralizer such as a Polonium (^{210}Po)

source or a Krypton (^{85}Kr) source. Replace radioactive sources at the intervals recommended by the neutralizer manufacturer.

(2) You may use other neutralizers, such as a corona-discharge ionizer. If you use a corona-discharge ionizer, we recommend that you monitor it for neutral net charge according to the ionizer manufacturer's recommendations.

Subpart C—Measurement Instruments

§ 1065.201 Overview and general provisions.

(a) *Scope.* This subpart specifies measurement instruments and associated system requirements related to emission testing in a laboratory and in the field. This includes laboratory instruments and portable emission measurement systems (PEMS) for measuring engine parameters, ambient conditions, flow-related parameters, and emission concentrations.

(b) *Instrument types.* You may use any of the specified instruments as described in this subpart to perform emission tests. If you want to use one of these instruments in a way that is not specified in this subpart, or if you want to use a different instrument, you must first get us to approve your alternate procedure under § 1065.10. Where we specify more than one instrument for a particular measurement, we may identify which instrument serves as the reference for showing that an alternative procedure is equivalent to the specified procedure.

(c) *Measurement systems.* Assemble a system of measurement instruments that allows you to show that your engines comply with the applicable emission standards, using good engineering judgment. When selecting instruments, consider how conditions such as vibration, temperature, pressure, humidity, viscosity, specific heat, and exhaust composition (including trace concentrations) may affect instrument compatibility and performance.

(d) *Redundant systems.* For all measurement instruments described in this subpart, you may use data from multiple instruments to calculate test results for a single test. If you use redundant systems, use good engineering judgment to use multiple measured values in calculations or to disregard individual measurements. Note that you must keep your results from all measurements, as described in § 1065.25. This requirements applies whether or not you actually use the measurements in your calculations.

(e) *Range.* You may use an instrument's response above 100% of its operating range if this does not affect your ability to show that your engines comply with the applicable emission standards. Note that we require additional testing and reporting if an analyzer responds above 100% of its range. See § 1065.550. Auto-ranging analyzers do not require additional testing or reporting.

(f) *Related subparts for laboratory testing.* Subpart D of this part describes how to evaluate the performance of the measurement instruments in this subpart. In general, if an instrument is specified in a specific section of this subpart, its calibration and verifications are typically specified in a similarly numbered section in subpart D of this part. For example, § 1065.290 gives instrument specifications for PM balances and § 1065.390 describes the corresponding calibrations and verifications. Note that some instruments also have other requirements in other sections of subpart D of this part. Subpart B of this part identifies specifications for other types of equipment, and subpart H of this part specifies engine fluids and analytical gases.

(g) *Field testing and testing with PEMS.* Subpart J of this part describes how to use these and other measurement instruments for field testing and other PEMS testing.

§ 1065.202 Data updating, recording, and control.

Your test system must be able to update data, record data and control systems related to operator demand, the dynamometer, sampling equipment, and measurement instruments. Use data acquisition and control systems that can record at the specified minimum frequencies, as follows:

TABLE 1 OF § 1065.202—DATA RECORDING AND CONTROL MINIMUM FREQUENCIES

Applicable test protocol section	Measured values	Minimum command and control frequency	Minimum recording frequency
§ 1065.510	Speed and torque during an engine step-map.	1 Hz	1 mean value per step.
§ 1065.510	Speed and torque during an engine sweep-map.	5 Hz	1 Hz means.
§ 1065.514, § 1065.530	Transient duty cycle reference and feedback speeds and torques.	5 Hz	1 Hz means.
§ 1065.514, § 1065.530	Steady-state and ramped-modal duty cycle reference and feedback speeds and torques.	1 Hz	1 Hz.
§ 1065.520, § 1065.530, § 1065.550	Continuous concentrations of raw or dilute analyzers.	N/A	1 Hz.
§ 1065.520, § 1065.530, § 1065.550	Batch concentrations of raw or dilute analyzers.	N/A	1 mean value per test interval.
§ 1065.530, § 1065.545	Diluted exhaust flow rate from a CVS with a heat exchanger upstream of the flow measurement.	N/A	1 Hz.
§ 1065.530, § 1065.545	Diluted exhaust flow rate from a CVS without a heat exchanger upstream of the flow measurement.	5 Hz	1 Hz means.
§ 1065.530, § 1065.545	Intake-air or raw-exhaust flow rate	N/A	1 Hz means.
§ 1065.530, § 1065.545	Dilution air if actively controlled	5 Hz	1 Hz means.
§ 1065.530	Sample flow from a CVS that has a heat exchanger.	1 Hz	1 Hz.
§ 1065.530, § 1065.545	Sample flow from a CVS does not have a heat exchanger.	5 Hz	1 Hz mean.

§ 1065.205 Performance specifications for measurement instruments.

Your test system as a whole must meet all the applicable calibrations, verifications, and test-validation criteria specified in subparts D and F of this part or subpart J of this part for using PEMS and for performing field testing. We recommend that your instruments meet the specifications in Table 1 of this section for all ranges you use for testing. We also recommend that you keep any documentation you receive from instrument manufacturers showing that your instruments meet the specifications in Table 1 of this section.

Table 1 of §1065.205–Recommended performance specifications for measurement instruments

Measurement instrument	Measured quantity symbol	Complete System Rise time and Fall time	Recording update frequency	Accuracy[a]	Repeatability[a]	Noise[a]
Engine speed transducer	f_n	1 s	1 Hz mean	2.0 % of pt. or 0.5 % of max.	1.0 % of pt. or 0.25 % of max.	0.05 % of max.
Engine torque transducer	T	1 s	1 Hz mean	2.0 % of pt. or 1.0 % of max.	1.0 % of pt. or 0.5 % of max.	0.05 % of max.
Electrical work (active power meter)	W	1 s	1 Hz mean	2.0 % of pt. or 0.5 % of max.	1.0 % of pt. or 0.25 % of max.	0.05 % of max.
General pressure transducer (not a part of another instrument)	p	5 s	1 Hz	2.0 % of pt. or 1.0 % of max.	1.0 % of pt. or 0.50 % of max.	0.1 % of max.
Atmospheric pressure meter used for PM-stabilization and balance environments	p_{atm}	50 s	5 times per hour	50 Pa	25 Pa	5 Pa
General-purpose atmospheric pressure meter	p_{atm}	50 s	5 times per hour	250 Pa	100Pa	50 Pa
Temperature sensor for PM-stabilization and balance environments	T	50 s	0.1 Hz	0.25 K	0.1 K	0.1 K
Other temperature sensor (not a part of another instrument)	T	10 s	0.5 Hz	0.4 % of pt. K or 0.2 % of max. K	0.2 % of pt. K or 0.1 % of max. K	0.1 % of max
Dewpoint sensor for PM-stabilization and balance environments	T_{dew}	50 s	0.1 Hz	0.25 K	0.1 K	0.02 K
Other dewpoint sensor	T_{dew}	50 s	0.1 Hz	1 K	0.5 K	0.1 K
Fuel flow meter (Fuel totalizer in parentheses)	$\dot{m}$	5 s (N/A)	1 Hz (N/A)	2.0 % of pt. or 1.5 % of max.	1.0 % of pt. or 0.75 % of max.	0.5 % of max.
Total diluted exhaust meter (CVS) (With heat exchanger before meter)	$\dot{m}$	1 s (5 s)	1 Hz mean (1 Hz)	2.0 % of pt. or 1.5 % of max.	1.0 % of pt. or 0.75 % of max.	1.0 % of max.
Dilution air, inlet air, exhaust, and sample flow meters	$\dot{m}$	1 s	1 Hz mean of 5 Hz samples	2.5 % of pt. or 1.5 % of max.	1.25 % of pt. or 0.75 % of max.	1.0 % of max.
Continuous gas analyzer	x	5 s	1 Hz	2.0 % of pt. or 2.0 % of mean.	1.0 % of pt. or 1.0 % of mean.	1.0 % of max.
Batch gas analyzer	x	N/A	N/A	2.0 % of pt. or 2.0 % of mean.	1.0 % of pt. or 1.0 % of mean.	1.0 % of max.
Gravimetric PM balance	m_{PM}	N/A	N/A	See §1065.790	0.5 µg	N/A
Inertial PM balance	m_{PM}	5 s	1 Hz	2.0 % of pt. or 2.0 % of mean.	1.0 % of pt. or 1.0 % of mean.	0.2 % of max.

[a] Accuracy, repeatability, and noise are all determined with the same collected data, as described in §1065.305, and based on absolute values. "pt." refers to the overall flow-weighted mean value expected at the standard. "max." refers to the peak value expected at the standard over any test interval, not the maximum of the instrument's range. "mean" refers to the actual (flow-weighted) mean measured over any test interval.

MEASUREMENT OF ENGINE PARAMETERS AND AMBIENT CONDITIONS

§ 1065.210 Work input and output sensors.

(a) *Application*. Use instruments as specified in this section to measure work inputs and outputs during engine operation. We recommend that you use sensors, transducers, and meters that meet the specifications in Table 1 of §1065.205. Note that your overall systems for measuring work inputs and outputs must meet the linearity verifications in §1065.307. We recommend that you measure work inputs and outputs where they cross the system boundary as shown in Figure 1 of this section. The system boundary is different for air-cooled engines than for liquid-cooled engines. If you choose to measure work before or after a work conversion, relative to the system boundary, use good engineering judgment to estimate any work-conversion

losses in a way that avoids overestimation of total work. For example, if it is impractical to instrument the shaft of an exhaust turbine generating electrical work, you may decide to measure its converted electrical work. In this case, divide the electrical work by an accurate value of electrical generator efficiency ($\eta<1$), or assume an efficiency of 1 ($\eta=1$), which would over-estimate brake-specific emissions. Do not underestimate the generator's efficiency because this would result in an under-estimation of brake-specific emissions. In all cases, ensure that you are able to accurately demonstrate compliance with the applicable standards.

Figure 1 of §1065.210: Work inputs, outputs, and system boundaries for liquid-cooled and air-cooled engines.

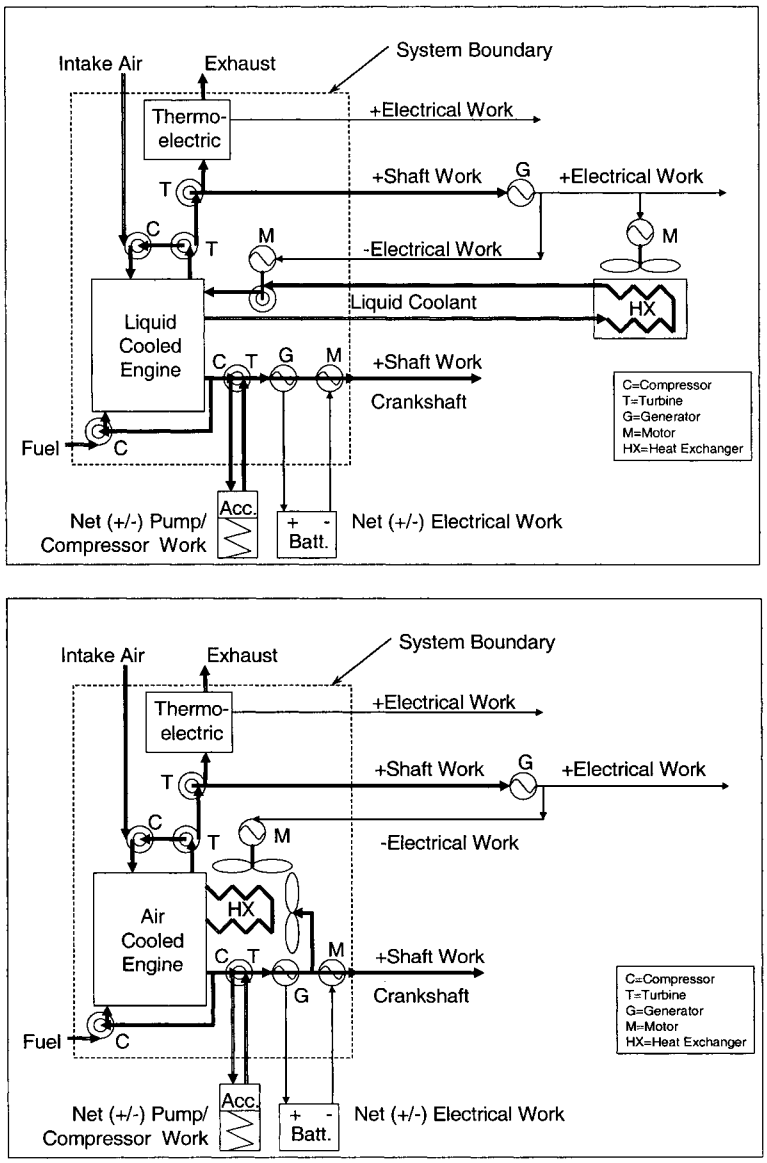

(b) *Shaft work.* Use speed and torque transducer outputs to calculate total work according to §1065.650.

(1) *Speed.* Use a magnetic or optical shaft-position detector with a resolution of at least 60 counts per revolution, in combination with a frequency

counter that rejects common-mode noise.

(2) *Torque.* You may use a variety of methods to determine engine torque. As needed, and based on good engineering judgment, compensate for torque induced by the inertia of accelerating and decelerating components connected to the flywheel, such as the drive shaft and dynamometer rotor. Use any of the following methods to determine engine torque:

(i) Measure torque by mounting a strain gage or similar instrument in-line between the engine and dynamometer.

(ii) Measure torque by mounting a strain gage or similar instrument on a lever arm connected to the dynamometer housing.

(iii) Calculate torque from internal dynamometer signals, such as armature current, as long as you calibrate this measurement as described in § 1065.310.

(c) *Electrical work.* Use a watt-hour meter output to calculate total work according to § 1065.650. Use a watt-hour meter that outputs active power (kW). Watt-hour meters typically combine a Wheatstone bridge voltmeter and a Hall-effect clamp-on ammeter into a single microprocessor-based instrument that analyzes and outputs several parameters, such as alternating or direct current voltage (V), current (A), power factor (pf), apparent power (VA), reactive power (VAR), and active power (W).

(d) *Pump, compressor or turbine work.* Use pressure transducer and flow-meter outputs to calculate total work according to § 1065.650. For flow meters, see § 1065.220 through § 1065.248.

§ 1065.215 Pressure transducers, temperature sensors, and dewpoint sensors.

(a) *Application.* Use instruments as specified in this section to measure pressure, temperature, and dewpoint.

(b) *Component requirements.* We recommend that you use pressure transducers, temperature sensors, and dewpoint sensors that meet the specifications in Table 1 of § 1065.205. Note that your overall systems for measuring pressure, temperature, and dewpoint must meet the calibration and verifications in § 1065.315.

(c) *Temperature.* For PM-balance environments or other precision temperature measurements over a narrow temperature range, we recommend thermistors. For other applications we recommend thermocouples that are not grounded to the thermocouple sheath. You may use other temperature sensors, such as resistive temperature detectors (RTDs).

(d) *Pressure.* Pressure transducers must be located in a temperature-controlled environment, or they must compensate for temperature changes over their expected operating range. Transducer materials must be compatible with the fluid being measured. For atmospheric pressure or other precision pressure measurements, we recommend either capacitance-type, quartz crystal, or laser-interferometer transducers. For other applications, we recommend either strain gage or capacitance-type pressure transducers. You may use other pressure-measurement instruments, such as manometers, where appropriate.

(e) *Dewpoint.* For PM-stabilization environments, we recommend chilled-surface hygrometers. For other applications, we recommend thin-film capacitance sensors. You may use other dewpoint sensors, such as a wet-bulb/dry-bulb psychrometer, where appropriate.

FLOW-RELATED MEASUREMENTS

§ 1065.220 Fuel flow meter.

(a) *Application.* You may use fuel flow in combination with a chemical balance of carbon (or oxygen) between the fuel, inlet air, and raw exhaust to calculate raw exhaust flow as described in § 1065.650, as follows:

(1) Use the actual value of calculated raw exhaust flow rate in the following cases:

(i) For multiplying raw exhaust flow rate with continuously sampled concentrations.

(ii) For multiplying total raw exhaust flow with batch-sampled concentrations.

(2) In the following cases, you may use a fuel flow meter signal that does

not give the actual value of raw exhaust, as long as it is linearly proportional to the exhaust molar flow rate's actual calculated value:

(i) For feedback control of a proportional sampling system, such as a partial-flow dilution system.

(ii) For multiplying with continuously sampled gas concentrations, if the same signal is used in a chemical-balance calculation to determine work from brake-specific fuel consumption and fuel consumed.

(b) *Component requirements.* We recommend that you use a fuel flow meter that meets the specifications in Table 1 of § 1065.205. We recommend a fuel flow meter that measures mass directly, such as one that relies on gravimetric or inertial measurement principles. This may involve using a meter with one or more scales for weighing fuel or using a Coriolis meter. Note that your overall system for measuring fuel flow must meet the linearity verification in § 1065.307 and the calibration and verifications in § 1065.320.

(c) *Recirculating fuel.* In any fuel-flow measurement, account for any fuel that bypasses the engine or returns from the engine to the fuel storage tank.

(d) *Flow conditioning.* For any type of fuel flow meter, condition the flow as needed to prevent wakes, eddies, circulating flows, or flow pulsations from affecting the accuracy or repeatability of the meter. You may accomplish this by using a sufficient length of straight tubing (such as a length equal to at least 10 pipe diameters) or by using specially designed tubing bends, straightening fins, or pneumatic pulsation dampeners to establish a steady and predictable velocity profile upstream of the meter.

§ 1065.225 Intake-air flow meter.

(a) *Application.* You may use an intake-air flow meter in combination with a chemical balance of carbon (or oxygen) between the fuel, inlet air, and raw exhaust to calculate raw exhaust flow as described in § 1065.650, as follows:

(1) Use the actual value of calculated raw exhaust in the following cases:

(i) For multiplying raw exhaust flow rate with continuously sampled concentrations.

(ii) For multiplying total raw exhaust flow with batch-sampled concentrations.

(2) In the following cases, you may use an intake-air flow meter signal that does not give the actual value of raw exhaust, as long as it is linearly proportional to the exhaust flow rate's actual calculated value:

(i) For feedback control of a proportional sampling system, such as a partial-flow dilution system.

(ii) For multiplying with continuously sampled gas concentrations, if the same signal is used in a chemical-balance calculation to determine work from brake-specific fuel consumption and fuel consumed.

(b) *Component requirements.* We recommend that you use an intake-air flow meter that meets the specifications in Table 1 of § 1065.205. This may include a laminar flow element, an ultrasonic flow meter, a subsonic venturi, a thermal-mass meter, an averaging Pitot tube, or a hot-wire anemometer. Note that your overall system for measuring intake-air flow must meet the linearity verification in § 1065.307 and the calibration in § 1065.325.

(c) *Flow conditioning.* For any type of intake-air flow meter, condition the flow as needed to prevent wakes, eddies, circulating flows, or flow pulsations from affecting the accuracy or repeatability of the meter. You may accomplish this by using a sufficient length of straight tubing (such as a length equal to at least 10 pipe diameters) or by using specially designed tubing bends, orifice plates or straightening fins to establish a predictable velocity profile upstream of the meter.

§ 1065.230 Raw exhaust flow meter.

(a) *Application.* You may use measured raw exhaust flow, as follows:

(1) Use the actual value of calculated raw exhaust in the following cases:

(i) Multiply raw exhaust flow rate with continuously sampled concentrations.

(ii) Multiply total raw exhaust with batch sampled concentrations.

(2) In the following cases, you may use a raw exhaust flow meter signal that does not give the actual value of raw exhaust, as long as it is linearly proportional to the exhaust flow rate's actual calculated value:

(i) For feedback control of a proportional sampling system, such as a partial-flow dilution system.

(ii) For multiplying with continuously sampled gas concentrations, if the same signal is used in a chemical-balance calculation to determine work from brake-specific fuel consumption and fuel consumed.

(b) *Component requirements.* We recommend that you use a raw-exhaust flow meter that meets the specifications in Table 1 of § 1065.205. This may involve using an ultrasonic flow meter, a subsonic venturi, an averaging Pitot tube, a hot-wire anemometer, or other measurement principle. This would generally not involve a laminar flow element or a thermal-mass meter. Note that your overall system for measuring raw exhaust flow must meet the linearity verification in § 1065.307 and the calibration and verifications in § 1065.330. Any raw-exhaust meter must be designed to appropriately compensate for changes in the raw exhaust's thermodynamic, fluid, and compositional states.

(c) *Flow conditioning.* For any type of raw exhaust flow meter, condition the flow as needed to prevent wakes, eddies, circulating flows, or flow pulsations from affecting the accuracy or repeatability of the meter. You may accomplish this by using a sufficient length of straight tubing (such as a length equal to at least 10 pipe diameters) or by using specially designed tubing bends, orifice plates or straightening fins to establish a predictable velocity profile upstream of the meter.

(d) *Exhaust cooling.* You may cool raw exhaust upstream of a raw-exhaust flow meter, as long as you observe all the following provisions:

(1) Do not sample PM downstream of the cooling.

(2) If cooling causes exhaust temperatures above 202 °C to decrease to below 180 °C, do not sample NMHC downstream of the cooling for compression-ignition engines, 2-stroke spark-ignition engines, and 4-stroke spark-ignition engines below 19 kW.

(3) If cooling causes aqueous condensation, do not sample NO_X downstream of the cooling unless the cooler meets the performance verification in § 1065.376.

(4) If cooling causes aqueous condensation before the flow reaches a flow meter, measure dewpoint, T_{dew} and pressure, p_{total} at the flow meter inlet. Use these values in emission calculations according to § 1065.650.

§ 1065.240 Dilution air and diluted exhaust flow meters.

(a) *Application.* Use a diluted exhaust flow meter to determine instantaneous diluted exhaust flow rates or total diluted exhaust flow over a test interval. You may use the difference between a diluted exhaust flow meter and a dilution air meter to calculate raw exhaust flow rates or total raw exhaust flow over a test interval.

(b) *Component requirements.* We recommend that you use a diluted exhaust flow meter that meets the specifications in Table 1 of § 1065.205. Note that your overall system for measuring diluted exhaust flow must meet the linearity verification in § 1065.307 and the calibration and verifications in § 1065.340 and § 1065.341. You may use the following meters:

(1) For constant-volume sampling (CVS) of the total flow of diluted exhaust, you may use a critical-flow venturi (CFV) or multiple critical-flow venturis arranged in parallel, a positive-displacement pump (PDP), a subsonic venturi (SSV), or an ultrasonic flow meter (UFM). Combined with an upstream heat exchanger, either a CFV or a PDP will also function as a passive flow controller in a CVS system. However, you may also combine any flow meter with any active flow control system to maintain proportional sampling of exhaust constituents. You may control the total flow of diluted exhaust, or one or more sample flows, or a combination of these flow controls to maintain proportional sampling.

(2) For any other dilution system, you may use a laminar flow element, an ultrasonic flow meter, a subsonic venturi, a critical-flow venturi or multiple critical-flow venturis arranged in

parallel, a positive-displacement meter, a thermal-mass meter, an averaging Pitot tube, or a hot-wire anemometer.

(c) *Flow conditioning.* For any type of diluted exhaust flow meter, condition the flow as needed to prevent wakes, eddies, circulating flows, or flow pulsations from affecting the accuracy or repeatability of the meter. For some meters, you may accomplish this by using a sufficient length of straight tubing (such as a length equal to at least 10 pipe diameters) or by using specially designed tubing bends, orifice plates or straightening fins to establish a predictable velocity profile upstream of the meter.

(d) *Exhaust cooling.* You may cool diluted exhaust upstream of a raw-exhaust flow meter, as long as you observe all the following provisions:

(1) Do not sample PM downstream of the cooling.

(2) If cooling causes exhaust temperatures above 202 °C to decrease to below 180 °C, do not sample NMHC downstream of the cooling for compression-ignition engines, 2-stroke spark-ignition engines, and 4-stroke spark-ignition engines below 19 kW.

(3) If cooling causes aqueous condensation, do not sample NO_X downstream of the cooling unless the cooler meets the performance verification in § 1065.376.

(4) If cooling causes aqueous condensation before the flow reaches a flow meter, measure dewpoint, T_{dew} and pressure, p_{total} at the flow meter inlet. Use these values in emission calculations according to § 1065.650.

§ 1065.245 Sample flow meter for batch sampling.

(a) *Application.* Use a sample flow meter to determine sample flow rates or total flow sampled into a batch sampling system over a test interval. You may use the difference between a diluted exhaust sample flow meter and a dilution air meter to calculate raw exhaust flow rates or total raw exhaust flow over a test interval.

(b) *Component requirements.* We recommend that you use a sample flow meter that meets the specifications in Table 1 of § 1065.205. This may involve a laminar flow element, an ultrasonic flow meter, a subsonic venturi, a critical-flow venturi or multiple critical-flow venturis arranged in parallel, a positive-displacement meter, a thermal-mass meter, an averaging Pitot tube, or a hot-wire anemometer. Note that your overall system for measuring sample flow must meet the linearity verification in § 1065.307. For the special case where CFVs are used for both the diluted exhaust and sample-flow measurements and their upstream pressures and temperatures remain similar during testing, you do not have to quantify the flow rate of the sample-flow CFV. In this special case, the sample-flow CFV inherently flow-weights the batch sample relative to the diluted exhaust CFV.

(c) *Flow conditioning.* For any type of sample flow meter, condition the flow as needed to prevent wakes, eddies, circulating flows, or flow pulsations from affecting the accuracy or repeatability of the meter. For some meters, you may accomplish this by using a sufficient length of straight tubing (such as a length equal to at least 10 pipe diameters) or by using specially designed tubing bends, orifice plates or straightening fins to establish a predictable velocity profile upstream of the meter.

§ 1065.248 Gas divider.

(a) *Application.* You may use a gas divider to blend calibration gases.

(b) *Component requirements.* Use a gas divider that blends gases to the specifications of § 1065.750 and to the flow-weighted concentrations expected during testing. You may use critical-flow gas dividers, capillary-tube gas dividers, or thermal-mass-meter gas dividers. Note that your overall gas-divider system must meet the linearity verification in § 1065.307.

CO AND CO_2 MEASUREMENTS

§ 1065.250 Nondispersive infra-red analyzer.

(a) *Application.* Use a nondispersive infra-red (NDIR) analyzer to measure CO and CO_2 concentrations in raw or diluted exhaust for either batch or continuous sampling.

(b) *Component requirements.* We recommend that you use an NDIR analyzer that meets the specifications in

Table 1 of § 1065.205. Note that your NDIR-based system must meet the calibration and verifications in § 1065.350 and § 1065.355 and it must also meet the linearity verification in § 1065.307. You may use an NDIR analyzer that has compensation algorithms that are functions of other gaseous measurements and the engine's known or assumed fuel properties. The target value for any compensation algorithm is 0.0% (that is, no bias high and no bias low), regardless of the uncompensated signal's bias.

HYDROCARBON MEASUREMENTS

§ 1065.260 Flame-ionization detector.

(a) *Application.* Use a flame-ionization detector (FID) analyzer to measure hydrocarbon concentrations in raw or diluted exhaust for either batch or continuous sampling. Determine hydrocarbon concentrations on a carbon number basis of one, C_1. Determine methane and nonmethane hydrocarbon values as described in paragraph (e) of this section. See subpart I of this part for special provisions that apply to measuring hydrocarbons when testing with oxygenated fuels.

(b) *Component requirements.* We recommend that you use a FID analyzer that meets the specifications in Table 1 of § 1065.205. Note that your FID-based system for measuring THC, THCE, or CH_4 must meet all of the verifications for hydrocarbon measurement in subpart D of this part, and it must also meet the linearity verification in § 1065.307. You may use a FID that has compensation algorithms that are functions of other gaseous measurements and the engine's known or assumed fuel properties. The target value for any compensation algorithm is 0.0% (that is, no bias high and no bias low), regardless of the uncompensated signal's bias.

(c) *Heated FID analyzers.* For diesel-fueled engines, two-stroke spark-ignition engines, and four-stroke spark-ignition engines below 19 kW, you must use heated FID analyzers that maintain all surfaces that are exposed to emissions at a temperature of (191 ±11) °C.

(d) *FID fuel and burner air.* Use FID fuel and burner air that meet the specifications of § 1065.750. Do not allow the FID fuel and burner air to mix before entering the FID analyzer to ensure that the FID analyzer operates with a diffusion flame and not a premixed flame.

(e) *Methane.* FID analyzers measure total hydrocarbons (THC). To determine nonmethane hydrocarbons (NMHC), quantify methane, CH_4, either with a nonmethane cutter and a FID analyzer as described in § 1065.265, or with a gas chromatograph as described in § 1065.267. Instead of measuring methane, you may assume that 2% of measured total hydrocarbons is methane, as described in § 1065.660. For a FID analyzer used to determine NMHC, determine its response factor to CH_4, RF_{CH4}, as described in § 1065.360. Note that NMHC-related calculations are described in § 1065.660.

§ 1065.265 Nonmethane cutter.

(a) *Application.* You may use a nonmethane cutter to measure CH_4 with a FID analyzer. A nonmethane cutter oxidizes all nonmethane hydrocarbons to CO_2 and H_2O. You may use a nonmethane cutter for raw or diluted exhaust for batch or continuous sampling.

(b) *System performance.* Determine nonmethane-cutter performance as described in § 1065.365 and use the results to calculate NMHC emission in § 1065.660.

(c) *Configuration.* Configure the nonmethane cutter with a bypass line for the verification described in § 1065.365.

(d) *Optimization.* You may optimize a nonmethane cutter to maximize the penetration of CH_4 and the oxidation of all other hydrocarbons. You may humidify a sample and you may dilute a sample with purified air or oxygen (O_2) upstream of the nonmethane cutter to optimize its performance. You must account for any sample humidification and dilution in emission calculations.

§ 1065.267 Gas chromatograph.

(a) *Application.* You may use a gas chromatograph to measure CH_4 concentrations of diluted exhaust for batch sampling. While you may also use a nonmethane cutter to measure

CH_4, as described in § 1065.265, use a reference procedure based on a gas chromatograph for comparison with any proposed alternate measurement procedure under § 1065.10.

(b) *Component requirements.* We recommend that you use a gas chromatograph that meets the specifications in Table 1 of § 1065.205, and it must also meet the linearity verification in § 1065.307.

NO_X MEASUREMENTS

§ 1065.270 Chemiluminescent detector.

(a) *Application.* You may use a chemiluminescent detector (CLD) to measure NO_X concentration in raw or diluted exhaust for batch or continuous sampling. We generally accept a CLD for NO_X measurement, even though it measures only NO and NO_2, when coupled with an NO_2-to-NO converter, since conventional engines and aftertreatment systems do not emit significant amounts of NO_X species other than NO and NO_2. Measure other NO_X species if required by the standard-setting part. While you may also use other instruments to measure NO_X, as described in § 1065.272, use a reference procedure based on a chemiluminescent detector for comparison with any proposed alternate measurement procedure under § 1065.10.

(b) *Component requirements.* We recommend that you use a CLD that meets the specifications in Table 1 of § 1065.205. Note that your CLD-based system must meet the quench verification in § 1065.370 and it must also meet the linearity verification in § 1065.307. You may use a heated or unheated CLD, and you may use a CLD that operates at atmospheric pressure or under a vacuum. You may use a CLD that has compensation algorithms that are functions of other gaseous measurements and the engine's known or assumed fuel properties. The target value for any compensation algorithm is 0.0% (that is, no bias high and no bias low), regardless of the uncompensated signal's bias.

(c) *NO_2-to-NO converter.* Place upstream of the CLD an internal or external NO_2-to-NO converter that meets the verification in § 1065.378. Configure the converter with a bypass to facilitate this verification.

(d) *Humidity effects.* You must maintain all CLD temperatures to prevent aqueous condensation. To remove humidity from a sample upstream of a CLD, use one of the following configurations:

(1) Connect a CLD downstream of any dryer or chiller that is downstream of an NO_2-to-NO converter that meets the verification in § 1065.378.

(2) Connect a CLD downstream of any dryer or thermal chiller that meets the verification in § 1065.376.

(e) *Response time.* You may use a heated CLD to improve CLD response time.

§ 1065.272 Nondispersive ultraviolet analyzer.

(a) *Application.* You may use a nondispersive ultraviolet (NDUV) analyzer to measure NO_X concentration in raw or diluted exhaust for batch or continuous sampling. We generally accept an NDUV for NO_X measurement, even though it measures only NO and NO_2, since conventional engines and aftertreatment systems do not emit significant amounts of other NO_X species. Measure other NO_X species if required by the standard-setting part.

(b) *Component requirements.* We recommend that you use an NDUV analyzer that meets the specifications in Table 1 of § 1065.205. Note that your NDUV-based system must meet the verifications in § 1065.372 and it must also meet the linearity verification in § 1065.307. You may use a NDUV analyzer that has compensation algorithms that are functions of other gaseous measurements and the engine's known or assumed fuel properties. The target value for any compensation algorithm is 0.0% (that is, no bias high and no bias low), regardless of the uncompensated signal's bias.

(c) *NO_2-to-NO converter.* If your NDUV analyzer measures only NO, place upstream of the NDUV analyzer an internal or external NO_2-to-NO converter that meets the verification in § 1065.378. Configure the converter with a bypass to facilitate this verification.

(d) *Humidity effects.* You must maintain NDUV temperature to prevent

aqueous condensation, unless you use one of the following configurations:

(1) Connect an NDUV downstream of any dryer or chiller that is downstream of an NO_2-to-NO converter that meets the verification in § 1065.378.

(2) Connect an NDUV downstream of any dryer or thermal chiller that meets the verification in § 1065.376.

O_2 MEASUREMENTS

§ 1065.280 Paramagnetic and magnetopneumatic O_2 detection analyzers.

(a) *Application.* You may use a paramagnetic detection (PMD) or magnetopneumatic detection MPD) analyzer to measure O_2 concentration in raw or diluted exhaust for batch or continuous sampling. You may use O_2 measurements with intake air or fuel flow measurements to calculate exhaust flow rate according to § 1065.650.

(b) *Component requirements.* We recommend that you use a PMD/MPD analyzer that meets the specifications in Table 1 of § 1065.205. Note that it must meet the linearity verification in § 1065.307. You may use a PMD/MPD that has compensation algorithms that are functions of other gaseous measurements and the engine's known or assumed fuel properties. The target value for any compensation algorithm is 0.0% (that is, no bias high and no bias low), regardless of the uncompensated signal's bias.

AIR-TO-FUEL RATIO MEASUREMENTS

§ 1065.284 Zirconia (ZrO_2) analyzer.

(a) *Application.* You may use a zirconia (ZrO_2) analyzer to measure air-to-fuel ratio in raw exhaust for continuous sampling. You may use O_2 measurements with intake air or fuel flow measurements to calculate exhaust flow rate according to § 1065.650.

(b) *Component requirements.* We recommend that you use a ZrO_2 analyzer that meets the specifications in Table 1 of § 1065.205. Note that your ZrO_2-based system must meet the linearity verification in § 1065.307. You may use a Zirconia analyzer that has compensation algorithms that are functions of other gaseous measurements and the engine's known or assumed fuel properties. The target value for any compensation algorithm is 0.0% (that is, no bias high and no bias low), regardless of the uncompensated signal's bias.

PM MEASUREMENTS

§ 1065.290 PM gravimetric balance.

(a) *Application.* Use a balance to weigh net PM on a sample medium for laboratory testing.

(b) *Component requirements.* We recommend that you use a balance that meets the specifications in Table 1 of § 1065.205. Note that your balance-based system must meet the linearity verification in § 1065.307. If the balance uses internal calibration weights for routine spanning and linearity verifications, the calibration weights must meet the specifications in § 1065.790. While you may also use an inertial balance to measure PM, as described in § 1065.295, use a reference procedure based on a gravimetric balance for comparison with any proposed alternate measurement procedure under § 1065.10.

(c) *Pan design.* We recommend that you use a balance pan designed to minimize corner loading of the balance, as follows:

(1) Use a pan that centers the PM sample on the weighing pan. For example, use a pan in the shape of a cross that has upswept tips that center the PM sample media on the pan.

(2) Use a pan that positions the PM sample as low as possible.

(d) *Balance configuration.* Configure the balance for optimum settling time and stability at your location.

§ 1065.295 PM inertial balance for field-testing analysis.

(a) *Application.* You may use an inertial balance to quantify net PM on a sample medium for field testing.

(b) *Component requirements.* We recommend that you use a balance that meets the specifications in Table 1 of § 1065.205. Note that your balance-based system must meet the linearity verification in § 1065.307. If the balance uses an internal calibration process for routine spanning and linearity verifications, the process must be NIST-traceable. You may use an inertial PM balance that has compensation algorithms that are functions of other

gaseous measurements and the engine's known or assumed fuel properties. The target value for any compensation algorithm is 0.0% (that is, no bias high and no bias low), regardless of the uncompensated signal's bias.

Subpart D—Calibrations and Verifications

§ 1065.301 Overview and general provisions.

(a) This subpart describes required and recommended calibrations and verifications of measurement systems. See subpart C of this part for specifications that apply to individual instruments.

(b) You must generally use complete measurement systems when performing calibrations or verifications in this subpart. For example, this would generally involve evaluating instruments based on values recorded with the complete system you use for recording test data, including analog-to-digital converters. For some calibrations and verifications, we may specify that you disconnect part of the measurement system to introduce a simulated signal.

(c) If we do not specify a calibration or verification for a portion of a measurement system, calibrate that portion of your system and verify its performance at a frequency consistent with any recommendations from the measurement-system manufacturer, consistent with good engineering judgment.

(d) Use NIST-traceable standards to the tolerances we specify for calibrations and verifications. Where we specify the need to use NIST-traceable standards, you may alternatively ask for our approval to use international standards that are not NIST-traceable.

§ 1065.303 Summary of required calibration and verifications.

The following table summarizes the required and recommended calibrations and verifications described in this subpart and indicates when these have to be performed:

TABLE 1 OF § 1065.303—SUMMARY OF REQUIRED CALIBRATION AND VERIFICATIONS

Type of calibration or verification	Minimum frequency [a]
§ 1065.305: accuracy, repeatability and noise.	*Accuracy:* Not required, but recommended for initial installation. *Repeatability:* Not required, but recommended for initial installation. *Noise:* Not required, but recommended for initial installation.
§ 1065.307: linearity	*Speed:* Upon initial installation, within 370 days before testing and after major maintenance. *Torque:* Upon initial installation, within 370 days before testing and after major maintenance. *Electrical power:* Upon initial installation, within 370 days before testing and after major maintenance. *Clean gas and diluted exhaust flows:* Upon initial installation, within 370 days before testing and after major maintenance, unless flow is verified by propane check or by carbon or oxygen balance. *Raw exhaust flow:* Upon initial installation, within 185 days before testing and after major maintenance, unless flow is verified by propane check or by carbon or oxygen balance. *Gas analyzers:* Upon initial installation, within 35 days before testing and after major maintenance. *PM balance:* Upon initial installation, within 370 days before testing and after major maintenance. *Stand-alone pressure and temperature:* Upon initial installation, within 370 days before testing and after major maintenance.
§ 1065.308: Continuous analyzer system response and recording.	Upon initial installation, after system reconfiguration, and after major maintenance.
§ 1065.309: Continuous analyzer uniform response.	Upon initial installation, after system reconfiguration, and after major maintenance.
§ 1065.310: torque	Upon initial installation and after major maintenance.
§ 1065.315: pressure, temperature, dewpoint.	Upon initial installation and after major maintenance.
§ 1065.320: fuel flow	Upon initial installation and after major maintenance.
§ 1065.325: intake flow	Upon initial installation and after major maintenance.
§ 1065.330: exhaust flow	Upon initial installation and after major maintenance.
§ 1065.340: diluted exhaust flow (CVS)	Upon initial installation and after major maintenance.
§ 1065.341: CVS and batch sampler verification.	Upon initial installation, within 35 days before testing, and after major maintenance.
§ 1065.345: vacuum leak	Before each laboratory test according to subpart F of this part and before each field test according to subpart J of this part.

TABLE 1 OF § 1065.303—SUMMARY OF REQUIRED CALIBRATION AND VERIFICATIONS—Continued

Type of calibration or verification	Minimum frequency [a]
§ 1065.350: CO_2 NDIR H_2O interference	Upon initial installation and after major maintenance.
§ 1065.355: CO NDIR CO_2 and H_2O interference.	Upon initial installation and after major maintenance.
§ 1065.360: FID optimization, etc.	*Calibrate, optimize, and determine CH_4 response:* upon initial installation and after major maintenance. *Verify CH_4 response:* upon initial installation, within 185 days before testing, and after major maintenance.
§ 1065.362: raw exhaust FID O_2 interference.	Upon initial installation, after FID optimization according to § 1065.360, and after major maintenance.
§ 1065.365: nonmethane cutter penetration	Upon initial installation, within 185 days before testing, and after major maintenance.
§ 1065.370: CLD CO_2 and H_2O quench	Upon initial installation and after major maintenance.
§ 1065.372: NDUV HC and H_2O interference.	Upon initial installation and after major maintenance.
§ 1065.376: chiller NO_2 penetration	Upon initial installation and after major maintenance.
§ 1065.378: NO_2-to-NO converter conversion.	Upon initial installation, within 35 days before testing, and after major maintenance.
§ 1065.390: PM balance and weighing	*Independent verification:* upon initial installation, within 370 days before testing, and after major maintenance. *Zero, span, and reference sample verifications:* within 12 hours of weighing, and after major maintenance.
§ 1065.395: Inertial PM balance and weighing.	Independent verification: upon initial installation, within 370 days before testing, and after major maintenance. *Other verifications:* upon initial installation and after major maintenance.

[a] Perform calibrations and verifications more frequently, according to measurement system manufacturer instructions and good engineering judgment.

§ 1065.305 Verifications for accuracy, repeatability, and noise.

(a) This section describes how to determine the accuracy, repeatability, and noise of an instrument. Table 1 of § 1065.205 specifies recommended values for individual instruments.

(b) We do not require you to verify instrument accuracy, repeatability, or noise.

However, it may be useful to consider these verifications to define a specification for a new instrument, to verify the performance of a new instrument upon delivery, or to troubleshoot an existing instrument.

(c) In this section we use the letter ''y'' to denote a generic measured quantity, the superscript over-bar to denote an arithmetic mean (such as $\bar{y}$), and the subscript ''$_{ref}$'' to denote the reference quantity being measured.

(d) Conduct these verifications as follows:

(1) Prepare an instrument so it operates at its specified temperatures, pressures, and flows. Perform any instrument linearization or calibration procedures prescribed by the instrument manufacturer.

(2) Zero the instrument as you would before an emission test by introducing a zero signal. Depending on the instrument, this may be a zero-concentration gas, a reference signal, a set of reference thermodynamic conditions, or some combination of these. For gas analyzers, use a zero gas that meets the specifications of § 1065.750.

(3) Span the instrument as you would before an emission test by introducing a span signal. Depending on the instrument, this may be a span-concentration gas, a reference signal, a set of reference thermodynamic conditions, or some combination of these. For gas analyzers, use a span gas that meets the specifications of § 1065.750.

(4) Use the instrument to quantify a NIST-traceable reference quantity, y_{ref}. For gas analyzers the reference gas must meet the specifications of § 1065.750. Select a reference quantity near the mean value expected during testing. For all gas analyzers, use a quantity near the flow-weighted mean concentration expected at the standard or expected during testing, whichever is greater. For a noise verfication, use the same zero gas from paragraph (e) of this section as the reference quantity. In all cases, allow time for the instrument to stabilize while it measures the reference quantity. Stabilization time

may include time to purge an instrument and time to account for its response.

(5) Sample and record values for 30 seconds, record the arithmetic mean, $\bar{y}_i$, and record the standard deviation, σ_i, of the recorded values. Refer to § 1065.602 for an example of calculating arithmetic mean and standard deviation.

(6) Also, if the reference quantity is not absolutely constant, which might be the case with a reference flow, sample and record values of y_{refi} for 30 seconds and record the arithmetic mean of the values, $\bar{y}_{ref}$. Refer to § 1065.602 for an example of calculating arithmetic mean.

(7) Subtract the reference value, y_{ref} (or $\bar{y}_{ref}$), from the arithmetic mean, $\bar{y}_i$. Record this value as the error, ε_i.

(8) Repeat the steps specified in paragraphs (d)(2) through (6) of this section until you have ten arithmetic means ($\bar{y}_1$, $\bar{y}_2$, $\bar{y}_i$,. . . $\bar{y}_{10}$), ten standard deviations, (σ_1, σ_2, σ_i,. . .σ_{10}), and ten errors (ε_1, ε_2, ε_i,. . .ε_{10}).

(9) Use the following values to quantify your measurements:

(i) *Accuracy*. Instrument accuracy is the absolute difference between the reference quantity, y_{ref} (or $\bar{y}_{ref}$), and the arithmetic mean of the ten $\bar{y}_i$, $\bar{y}$ values. Refer to the example of an accuracy calculation in § 1065.602. We recommend that instrument accuracy be within the specifications in Table 1 of § 1065.205.

(ii) *Repeatability*. Repeatability is two times the standard deviation of the ten errors (that is, repeatability = $2 \cdot \sigma_\varepsilon$). Refer to the example of a standard-deviation calculation in § 1065.602. We recommend that instrument repeatability be within the specifications in Table 1 of § 1065.205.

(iii) *Noise*. Noise is two times the root-mean-square of the ten standard deviations (that is, noise = $2 \cdot rms_\sigma$) when the reference signal is a zero-quantity signal. Refer to the example of a root-mean-square calculation in § 1065.602. We recommend that instrument noise be within the specifications in Table 1 of § 1065.205. Use this value in the noise correction specified in § 1065.657.

(10) You may use a measurement instrument that does not meet the accuracy, repeatability, or noise specifications in Table 1 of § 1065.205, as long as you meet the following criteria:

(i) Your measurement systems meet all the other required calibration, verification, and validation specifications in subparts D, F, and J of this part, as applicable.

(ii) The measurement deficiency does not adversely affect your ability to demonstrate compliance with the applicable standards.

§ 1065.307 Linearity verification.

(a) *Scope and frequency*. Perform a linearity verification on each measurement system listed in Table 1 of this section at least as frequently as indicated in the table, consistent with measurement system manufacturer recommendations and good engineering judgment. Note that this linearity verification may replace requirements we previously referred to as ''calibrations''. The intent of a linearity verification is to determine that a measurement system responds proportionally over the measurement range of interest. A linearity verification generally consists of introducing a series of at least 10 reference values to a measurement system. The measurement system quantifies each reference value. The measured values are then collectively compared to the reference values by using a least squares linear regression and the linearity criteria specified in Table 1 of this section.

(b) *Performance requirements.* If a measurement system does not meet the applicable linearity criteria in Table 1 of this section, correct the deficiency by re-calibrating, servicing, or replacing components as needed. Before you may use a measurement system that does not meet linearity criteria, you must demonstrate to us that the deficiency does not adversely affect your ability to demonstrate compliance with the applicable standards.

(c) *Procedure.* Use the following linearity verification protocol, or use good engineering judgment to develop a different protocol that satisfies the intent of this section, as described in paragraph (a) of this section:

(1) In this paragraph (c), we use the letter ''*y*'' to denote a generic measured quantity, the superscript over-bar

to denote an arithmetic mean (such as $\bar{y}$), and the subscript "$_{ref}$" to denote the known or reference quantity being measured.

(2) Operate a measurement system at its specified temperatures, pressures, and flows. This may include any specified adjustment or periodic calibration of the measurement system.

(3) Zero the instrument as you would before an emission test by introducing a zero signal. Depending on the instrument, this may be a zero-concentration gas, a reference signal, a set of reference thermodynamic conditions, or some combination of these. For gas analyzers, use a zero gas that meets the specifications of §1065.750 and introduce it directly at the analyzer port.

(4) Span the instrument as you would before an emission test by introducing a span signal. Depending on the instrument, this may be a span-concentration gas, a reference signal, a set of reference thermodynamic conditions, or some combination of these. For gas analyzers, use a span gas that meets the specifications of §1065.750 and introduce it directly at the analyzer port.

(5) After spanning the instrument, check zero with the same signal you used in paragraph (c)(3) of this section. Based on the zero reading, use good engineering judgment to determine whether or not to rezero and or re-span the instrument before proceeding to the next step.

(6) Use instrument manufacturer recommendations and good engineering judgment to select at least 10 reference values, y_{refi}, that are within the range from zero to the highest values expected during emission testing. We recommend selecting a zero reference signal as one of the reference values of the linearity verification.

(7) Use instrument manufacturer recommendations and good engineering judgment to select the order in which you will introduce the series of reference values. For example you may select the reference values randomly to avoid correlation with previous measurements, you may select reference values in ascending or descending order to avoid long settling times of reference signals, or as another example you may select values to ascend and then descend which might incorporate the effects of any instrument hysteresis into the linearity verification.

(8) Generate reference quantities as described in paragraph (d) of this section. For gas analyzers, use gas concentrations known to be within the specifications of §1065.750 and introduce them directly at the analyzer port.

(9) Introduce a reference signal to the measurement instrument.

(10) Allow time for the instrument to stabilize while it measures the reference value. Stabilization time may include time to purge an instrument and time to account for its response.

(11) At a recording frequency of at least f Hz, specified in Table 1 of §1065.205, measure the reference value for 30 seconds and record the arithmetic mean of the recorded values, $\bar{y}_i$. Refer to §1065.602 for an example of calculating an arithmetic mean.

(12) Repeat steps in paragraphs (c)(9) through (11) of this section until all reference quantities are measured.

(13) Use the arithmetic means $\bar{y}_i$, and reference values, y_{refi} , to calculate least-squares linear regression parameters and statistical values to compare to the minimum performance criteria specified in Table 1 of this section. Use the calculations described in §1065.602.

(d) *Reference signals.* This paragraph (d) describes recommended methods for generating reference values for the linearity-verification protocol in paragraph (c) of this section. Use reference values that simulate actual values, or introduce an actual value and measure it with a reference-measurement system. In the latter case, the reference value is the value reported by the reference-measurement system. Reference values and reference-measurement systems must be NIST-traceable. We recommend using calibration reference quantities that are NIST-traceable within 0.5% uncertainty, if not specified otherwise in other sections of this part 1065. Use the following recommended methods to generate reference values or use good engineering judgment to select a different reference:

(1) *Engine speed.* Run the engine or dynamometer at a series of steady-state speeds and use a strobe, a photo tachometer, or a laser tachometer to record reference speeds.

(2) *Engine torque.* Use a series of calibration weights and a calibration lever arm to simulate engine torque. You may instead use the engine or dynamometer itself to generate a nominal torque that is measured by a reference load cell or proving ring in series with the torque-measurement system. In this case use the reference load cell measurement as the reference value. Refer to §1065.310 for a torque-calibration procedure similar to the linearity verification in this section.

(3) *Electrical work.* Use a controlled source of current and a watt-hour standard reference meter. Complete calibration systems that contain a current source and a reference watt-hour meter are commonly used in the electrical power distribution industry and are therefore commercially available.

(4) *Fuel rate.* Operate the engine at a series of constant fuel-flow rates or recirculate fuel back to a tank through the fuel flow meter at different flow rates. Use a gravimetric reference measurement (such as a scale, balance, or mass comparator) at the inlet to the fuel-measurement system. Use a stopwatch or timer to measure the time intervals over which reference masses of fuel are introduced to the fuel measurement system. The reference fuel mass divided by the time interval is the reference fuel flow rate.

(5) *Flow rates—inlet air, dilution air, diluted exhaust, raw exhaust, or sample flow.* Use a reference flow meter with a blower or pump to simulate flow rates. Use a restrictor, diverter valve, a variable-speed blower or a variable-speed pump to control the range of flow rates. Use the reference meter's response as the reference values.

(i) *Reference flow meters.* Because the flow range requirements for these various flows are large, we allow a variety of reference meters. For example, for diluted exhaust flow for a full-flow dilution system, we recommend a reference subsonic venturi flow meter with a restrictor valve and a blower to simulate flow rates. For inlet air, dilution air, diluted exhaust for partial-flow dilution, raw exhaust, or sample flow, we allow reference meters such as critical flow orifices, critical flow venturis, laminar flow elements, master mass flow standards, or Roots meters. Make sure the reference meter is calibrated by the flow-meter manufacturer and its calibration is NIST-traceable. If you use the difference of two flow measurements to determine a net flow rate, you may use one of the measurements as a reference for the other.

(ii) *Reference flow values.* Because the reference flow is not absolutely constant, sample and record values of $\dot{n}_{refi}$ for 30 seconds and use the arithmetic mean of the values, $\bar{\dot{n}}_{ref}$, as the reference value. Refer to §1065.602 for an example of calculating arithmetic mean.

(6) *Gas division.* Use one of the two reference signals: (i) At the outlet of the gas-division system, connect a gas analyzer that meets the linearity verification described in this section and has not been linearized with the gas divider being verified. For example, verify the linearity of an analyzer using a series of reference analytical gases directly from compressed gas cylinders that meet the specifications of §1065.750. We recommend using a FID analyzer or a PMD/MPD O_2 analyzer because of their inherent linearity. Operate this analyzer consistent with how you would operate it during an emission test. Connect a span gas to the gas-divider inlet. Use the gas-division system to divide the span gas with purified air or nitrogen. Select gas divisions that you typically use. Use a selected gas division as the measured value. Use the analyzer response divided by the span gas concentration as the reference gas-division value. Because the instrument response is not absolutely constant, sample and record values of x_{refi} for 30 seconds and use the arithmetic mean of the values $\bar{x}_{ref}$, as the reference value. Refer to §1065.602 for an example of calculating arithmetic mean.

(ii) Using good engineering judgment and gas divider manufacturer recommendations, use one or more reference flow meters to verify the measured flow rates of the gas divider.

(7) *Continuous constituent concentration.* For reference values, use a series of gas cylinders of known gas concentration or use a gas-division system that is known to be linear with a span gas. Gas cylinders, gas-division systems, and span gases that you use for reference values must meet the specifications of § 1065.750.

Table 1 of § 1065.307–Measurement systems that require linearity verifications

Measurement System	Quantity	Minimum verification frequency[a]	Linearity Criteria			
			$\lvert a_0 \rvert$ [b]	a_1 [c]	*SEE*[b]	r^2
Engine speed	f_n	Within 370 days before testing	$\leq 0.05\ \% \cdot f_{nmax}$	0.98-1.02	$\leq 2\ \% \cdot f_{nmax}$	≥ 0.990
Engine torque	T	Within 370 days before testing	$\leq 1\ \% \cdot T_{max}$	0.98-1.02	$\leq 2\ \% \cdot T_{max}$	≥ 0.990
Electrical work	W	Within 370 days before testing	$\leq 1\ \% \cdot W_{max}$	0.98-1.02	$\leq 2\ \% \cdot W_{max}$	≥ 0.990
Fuel flow rate	$\dot{m}$	Within 370 days before testing[d]	$\leq 1\ \% \cdot \dot{m}_{max}$	0.98-1.02 [e]	$\leq 2\ \% \cdot \dot{m}_{max}$	≥ 0.990
Intake-air flow rate	$\dot{n}$	Within 370 days before testing [d]	$\leq 1\ \% \cdot \dot{n}_{max}$	0.98-1.02 [e]	$\leq 2\ \% \cdot \dot{n}_{max}$	≥ 0.990
Dilution air flow rate	$\dot{n}$	Within 370 days before testing [d]	$\leq 1\ \% \cdot \dot{n}_{max}$	0.98-1.02	$\leq 2\ \% \cdot \dot{n}_{max}$	≥ 0.990
Diluted exhaust flow rate	$\dot{n}$	Within 370 days before testing [d]	$\leq 1\ \% \cdot \dot{n}_{min}$	0.98-1.02	$\leq 2\ \% \cdot \dot{n}_{max}$	≥ 0.990
Raw exhaust flow rate	$\dot{n}$	Within 185 days before testing [d]	$\leq 1\ \% \cdot \dot{n}_{max}$	0.98-1.02 [e]	$\leq 2\ \% \cdot \dot{n}_{max}$	≥ 0.990
Batch sampler flow rates	$\dot{n}$	Within 370 days before testing [d]	$\leq 1\ \% \cdot \dot{n}_{max}$	0.98-1.02	$\leq 2\ \% \cdot \dot{n}_{max}$	≥ 0.990
Gas dividers	x	Within 370 days before testing	$\leq 0.5\ \% \cdot x_{max}$	0.98-1.02	$\leq 2\ \% \cdot x_{max}$	≥ 0.990
All gas analyzers	x	Within 35 days before testing	$\leq 0.5\ \% \cdot x_{max}$	0.99-1.01	$\leq 1\ \% \cdot x_{max}$	≥ 0.998
PM balance	m	Within 370 days before testing	$\leq 1\ \% \cdot m_{min}$	0.99-1.01	$\leq 1\ \% \cdot m_{min}$	≥ 0.998
Stand-alone pressures	p	Within 370 days before testing	$\leq 1\ \% \cdot p_{max}$	0.99-1.01	$\leq 1\ \% \cdot p_{max}$	≥ 0.998
Stand-alone temperatures	T	Within 370 days before testing	$\leq 1\ \% \cdot T_{max}$	0.99-1.01	$\leq 1\ \% \cdot T_{max}$	≥ 0.998

[a] Perform a linearity verification more frequently if the instrument manufacturer recommends it or based on good engineering judgment.

[b] "max" refers to the maximum value expected during a test—the maximum value used for the linearity verification.

[c] The specified ranges are inclusive. For example, a specified range of 0.98-1.02 for a_1 means $0.98 \leq a_1 \leq 1.02$.

[d] These linearity verifications are not required for systems that pass the flow-rate verification for diluted exhaust as described in § 1065.341 (the propane check) or for systems that agree within ±2 % based on a chemical balance of carbon or oxygen of the intake air, fuel, and exhaust.

[e] a_0 and a_1 for these quantities are required only if the actual value of the quantity is required, as opposed to a signal that is only linearly proportional to the actual value.

§ 1065.308 Continuous gas analyzer system-response and updating-recording verification.

(a) *Scope and frequency.* Perform this verification after installing or replacing a gas analyzer that you use for continuous sampling. Also perform this verification if you reconfigure your system in a way that would change system response. For example, perform

this verification if you add a significant volume to the transfer lines by increasing their length or adding a filter; or if you change the frequency at which you sample and record gas-analyzer concentrations.

(b) *Measurement principles.* This test verifies that the updating and recording frequencies match the overall system response to a rapid change in the value of concentrations at the sample probe. Gas analyzer systems must be optimized such that their overall response to a rapid change in concentration is updated and recorded at an appropriate frequency to prevent loss of information.

(c) *System requirements.* To demonstrate acceptable updating and recording with respect to the system's overall response, use good engineering judgment to select one of the following criteria that your system must meet:

(1) The product of the mean rise time and the frequency at which the system records an updated concentration must be at least 5, and the product of the mean fall time and the frequency at which the system records an updated concentration must be at least 5. This criteria makes no assumption regarding the frequency content of changes in emission concentrations during emission testing; therefore, it is valid for any testing.

(2) The frequency at which the system records an updated concentration must be at least 5 Hz. This criteria assumes that the frequency content of significant changes in emission concentrations during emission testing do not exceed 1 Hz.

(3) You may use other criteria if we approve the criteria in advance.

(4) For PEMS, you do not have to meet this criteria if your PEMS meets the overall PEMS check in §1065.920.

(d) *Procedure.* Use the following procedure to verify the response of a continuous gas analyzer system:

(1) *Instrument setup.* Follow the analyzer system manufacturer's start-up and operating instructions. Adjust the system as needed to optimize performance.

(2) *Equipment setup.* Using minimal gas transfer line lengths between all connections, connect a zero-air source to one inlet of a fast-acting 3-way valve (2 inlets, 1 outlet). Using a gas divider, equally blend an NO–CO–CO_2–C_3H_8–CH_4 (balance N_2) span gas with a span gas of NO_2. Connect the gas divider outlet to the other inlet of the 3-way valve. Connect the valve outlet to an overflow at the gas analyzer system's probe or to an overflow fitting between the probe and transfer line to all the analyzers being verified.

(3) *Data collection.* (i) Switch the valve to flow zero gas.

(ii) Allow for stabilization, accounting for transport delays and the slowest instrument's full response.

(iii) Start recording data at the frequency used during emission testing. Each recorded value must be a unique updated concentration measured by the analyzer; you may not use interpolation to increase the number of recorded values.

(iv) Switch the valve to flow the blended span gases.

(v) Allow for transport delays and the slowest instrument's full response.

(vi) Repeat the steps in paragraphs (d)(3)(i) through (v) of this section to record seven full cycles, ending with zero gas flowing to the analyzers.

(vii) Stop recording.

(e) *Performance evaluation.* (1) If you chose to demonstrate compliance with paragraph (c)(1) of this section, use the data from paragraph (d)(3) of this section to calculate the mean rise time, $T_{10–90}$, and mean fall time, $T_{90–10}$, for each of the analyzers. Multiply these times (in seconds) by their respective recording frequencies in Hertz (1/second). The value for each result must be at least 5. If the value is less than 5, increase the recording frequency or adjust the flows or design of the sampling system to increase the rise time and fall time as needed. You may also configure digital filters to increase rise and fall times.

(2) If a measurement system fails the criterion in paragraph (e)(1) of this section, ensure that signals from the system are updated and recorded at a frequency of at least 5 Hz.

(3) If a measurement system fails the criteria in paragraphs (e)(1) and (2) of this section, you may use the continuous analyzer system only if the deficiency does not adversely affect your

ability to show compliance with the applicable standards.

§ 1065.309 Continuous gas analyzer uniform response verification.

(a) *Scope and frequency.* If you use more than one continuous gas analyzer to quantify a gaseous constituent, you must perform this verification. For example, if you determine NMHC as the difference between continuous THC and CH_4 measurements, you must perform this verification on your NMHC measurement system. As another example if you determine NO_X as the sum of separate continuous measurements of NO and NO_2, you must perform this verification on your NO_X measurement system. Also, you must perform this verification if you use one continuous analyzer to apply an interference compensation algorithm to another continuous gas analyzer. Perform this verification after initial installation or major maintenance. Also perform this verification if you reconfigure your system in a way that would change system response. For example, perform this verification if you add a significant volume to the transfer lines by increasing their length or by adding a filter; or if you change the frequency at which you sample and record gas-analyzer concentrations.

(b) *Measurement principles.* This procedure verifies the time-alignment and uniform response of combined continuous gas measurements.

(c) *System requirements.* Demonstrate that combined continuous concentration measurements have a uniform rise and fall during a simultaneous to a step change in both concentrations. During a system response to a rapid change in multiple gas concentrations, demonstrate that the t_{50} times of all combined analyzers all occur at the same recorded second of data or between the same two recorded seconds of data.

(d) *Procedure.* Use the following procedure to verify the response of a continuous gas analyzer system:

(1) *Instrument setup.* Follow the analyzer system manufacturer's start-up and operating instructions. Adjust the system as needed to optimize performance.

(2) *Equipment setup.* Using minimal gas transfer line lengths between all connections, connect a zero-air source to the inlet of a 100 °C heated line. Connect the heated line outlet to one inlet of a 100 °C heated fast-acting 3-way valve (2 inlets, 1 outlet). Using a gas divider, equally blend an NO–CO–CO_2–C_3H_8–CH_4 (balance N_2) span gas with a span gas of NO_2 (balance N_2). Connect the gas divider outlet to the inlet of a 50 °C heated line. Connect the heated line outlet to the inlet of a 50 °C gas bubbler filled with distilled water. Connect the bubbler outlet to another heated line at 100 °C. Connect the outlet of the 100 °C line to the other inlet of the 3-way valve. Connect the valve outlet to an overflow at the gas analyzer system's probe or to an overflow fitting between the probe and transfer line to all the analyzers being verified.

(3) *Data collection.* (i) Switch the valve to flow zero gas.

(ii) Allow for stabilization, accounting for transport delays and the slowest instrument's full response.

(iii) Start recording data at the frequency used during emission testing.

(iv) Switch the valve to flow span gas.

(v) Allow for transport delays and the slowest instrument's full response.

(vi) Repeat the steps in paragraphs (d)(3)(i) through (v) of this section to record seven full cycles, ending with zero gas flowing to the analyzers.

(vii) Stop recording.

(e) *Performance evaluations.* Perform the following evaluations:

(1) *Uniform response evaluation.* (i) Calculate the mean rise time, $t_{10–90}$, mean fall time, $t_{90–10}$ for each analyzer.

(ii) Determine the maximum mean rise and fall times for the slowest responding analyzer in each combination of continuous analyzer signals that you use to determine a single emission concentration.

(iii) If the maximum rise time or fall time is greater than one second, verify that all other gas analyzers combined with it have mean rise and fall times of at least 75% of that analyzer's response.

(iv) If any analyzer has shorter rise or fall times, disperse that signal so that it better matches the rise and fall times of the slowest signal with which

it is combined. We recommend that you perform dispersion using SAE 2001–01–3536 (incorporated by reference in § 1065.1010) as a guide.

(v) Repeat this verification after optimizing your systems to ensure that you dispersed signals correctly. If after repeated attempts at dispersing signals your system still fails this verification, you may use the continuous analyzer system if the deficiency does not adversely affect your ability to show compliance with the applicable standards.

(2) *Time alignment evaluation*. (i) After all signals are adjusted to meet the uniform response evaluation, determine the second at which—or the two seconds between which—each analyzer crossed the midpoint of its response, t_{50}.

(ii) Verify that all combined gas analyzer signals are time-aligned such that all of their t_{50} times occurred at the same second or between the same two seconds in the recorded data.

(iii) If your system fails to meet this criterion, you may change the time alignment of your system and retest the system completely. If after changing the time alignment of your system, some of the t_{50} times still are not aligned, take corrective action by dispersing analyzer signals that have the shortest rise and fall times.

(iv) If some t_{50} times are still not aligned after repeated attempts at dispersion and time alignment, you may use the continuous analyzer system if the deficiency does not adversely affect your ability to show compliance with the applicable standards.

MEASUREMENT OF ENGINE PARAMETERS AND AMBIENT CONDITIONS

§ 1065.310 Torque calibration.

(a) *Scope and frequency*. Calibrate all torque-measurement systems including dynamometer torque measurement transducers and systems upon initial installation and after major maintenance. Use good engineering judgment to repeat the calibration. Follow the torque transducer manufacturer's instructions for linearizing your torque sensor's output. We recommend that you calibrate the torque-measurement system with a reference force and a lever arm.

(b) *Recommended procedure*. (1) *Reference force quantification*. Use either a set of dead-weights or a reference meter such as strain gage or a proving ring to quantify the reference force, NIST-traceable within ±0.5% uncertainty.

(2) *Lever-arm length quantification*. Quantify the lever arm length, NIST-traceable within ±0.5% uncertainty. The lever arm's length must be measured from the centerline of the dynamometer to the point at which the reference force is measured. The lever arm must be perpendicular to gravity (i.e., horizontal), and it must be perpendicular to the dynamometer's rotational axis. Balance the lever arm's torque or quantify its net hanging torque, NIST-traceable within ±1% uncertainty, and account for it as part of the reference torque.

(c) *Dead-weight calibration*. This technique applies a known force by hanging known weights at a known distance along a lever arm. Make sure the weights' lever arm is perpendicular to gravity (i.e., horizontal) and perpendicular to the dynamometer's rotational axis. Apply at least six calibration-weight combinations for each applicable torque-measuring range, spacing the weight quantities about equally over the range. Oscillate or rotate the dynamometer during calibration to reduce frictional static hysteresis. Determine each weight's force by multiplying its NIST-traceable mass by the local acceleration of Earth's gravity (using this equation: force = mass · acceleration). The local acceleration of gravity, a_g, at your latitude, longitude, and elevation may be determined by entering position and elevation data into the U.S. National Oceanographic and Atmospheric Administration's surface gravity prediction Web site at *http://www.ngs.noaa.gov/cgi-bin/grav_pdx.prl*. If this Web site is unavailable, you may use the equation in § 1065.630, which returns the local acceleration of gravity based on a given latitude. In this case, calculate the reference torque as the weights' reference force multiplied by the lever arm reference length (using this equation: torque = force · lever arm length).

(d) *Strain gage or proving ring calibration*. This technique applies force either by hanging weights on a lever arm (these weights and their lever arm length are not used) or by operating the dynamometer at different torques. Apply at least six force combinations for each applicable torque-measuring range, spacing the force quantities about equally over the range. Oscillate or rotate the dynamometer during calibration to reduce frictional static hysteresis. In this case, the reference torque is determined by multiplying the reference meter force output by its effective lever-arm length, which you measure from the point where the force measurement is made to the dynamometer's rotational axis. Make sure you measure this length perpendicular to gravity (i.e., horizontal) and perpendicular to the dynamometer's rotational axis.

§ 1065.315 Pressure, temperature, and dewpoint calibration.

(a) Calibrate instruments for measuring pressure, temperature, and dewpoint upon initial installation. Follow the instrument manufacturer's instructions and use good engineering judgment to repeat the calibration, as follows:

(1) *Pressure*. We recommend temperature-compensated, digital-pneumatic, or deadweight pressure calibrators, with data-logging capabilities to minimize transcription errors. We recommend using calibration reference quantities that are NIST-traceable within 0.5% uncertainty.

(2) *Temperature*. We recommend digital dry-block or stirred-liquid temperature calibrators, with datalogging capabilities to minimize transcription errors. We recommend using calibration reference quantities that are NIST-traceable within 0.5% uncertainty.

(3) *Dewpoint*. We recommend a minimum of three different temperature-equilibrated and temperature-monitored calibration salt solutions in containers that seal completely around the dewpoint sensor. We recommend using calibration reference quantities that are NIST-traceable within 0.5% uncertainty.

(b) You may remove system components for off-site calibration. We recommend specifying calibration reference quantities that are NIST-traceable within 0.5% uncertainty.

FLOW-RELATED MEASUREMENTS

§ 1065.320 Fuel-flow calibration.

(a) Calibrate fuel-flow meters upon initial installation. Follow the instrument manufacturer's instructions and use good engineering judgment to repeat the calibration.

(b) You may also develop a procedure based on a chemical balance of carbon or oxygen in engine exhaust.

(c) You may remove system components for off-site calibration. When installing a flow meter with an off-site calibration, we recommend that you consider the effects of the tubing configuration upstream and downstream of the flow meter. We recommend specifying calibration reference quantities that are NIST-traceable within 0.5% uncertainty.

§ 1065.325 Intake-flow calibration.

(a) Calibrate intake-air flow meters upon initial installation. Follow the instrument manufacturer's instructions and use good engineering judgment to repeat the calibration. We recommend using a calibration subsonic venturi, ultrasonic flow meter or laminar flow element. We recommend using calibration reference quantities that are NIST-traceable within 0.5% uncertainty.

(b) You may remove system components for off-site calibration. When installing a flow meter with an off-site calibration, we recommend that you consider the effects of the tubing configuration upstream and downstream of the flow meter. We recommend specifying calibration reference quantities that are NIST-traceable within 0.5% uncertainty.

(c) If you use a subsonic venturi or ultrasonic flow meter for intake flow measurement, we recommend that you calibrate it as described in § 1065.340.

§ 1065.330 Exhaust-flow calibration.

(a) Calibrate exhaust-flow meters upon initial installation. Follow the instrument manufacturer's instructions

and use good engineering judgment to repeat the calibration. We recommend that you use a calibration subsonic venturi or ultrasonic flow meter and simulate exhaust temperatures by incorporating a heat exchanger between the calibration meter and the exhaust-flow meter. If you can demonstrate that the flow meter to be calibrated is insensitive to exhaust temperatures, you may use other reference meters such as laminar flow elements, which are not commonly designed to withstand typical raw exhaust temperatures. We recommend using calibration reference quantities that are NIST-traceable within 0.5% uncertainty.

(b) You may remove system components for off-site calibration. When installing a flow meter with an off-site calibration, we recommend that you consider the effects of the tubing configuration upstream and downstream of the flow meter. We recommend specifying calibration reference quantities that are NIST-traceable within 0.5% uncertainty.

(c) If you use a subsonic venturi or ultrasonic flow meter for raw exhaust flow measurement, we recommend that you calibrate it as described in § 1065.340.

§ 1065.340 Diluted exhaust flow (CVS) calibration.

(a) *Overview*. This section describes how to calibrate flow meters for diluted exhaust constant-volume sampling (CVS) systems.

(b) *Scope and frequency*. Perform this calibration while the flow meter is installed in its permanent position. Perform this calibration after you change any part of the flow configuration upstream or downstream of the flow meter that may affect the flow-meter calibration. Perform this calibration upon initial CVS installation and whenever corrective action does not resolve a failure to meet the diluted exhaust flow verification (i.e., propane check) in § 1065.341.

(c) *Reference flow meter*. Calibrate a CVS flow meter using a reference flow meter such as a subsonic venturi flow meter, a long-radius ASME/NIST flow nozzle, a smooth approach orifice, a laminar flow element, a set of critical flow venturis, or an ultrasonic flow meter. Use a reference flow meter that reports quantities that are NIST-traceable within ±1% uncertainty. Use this reference flow meter's response to flow as the reference value for CVS flow-meter calibration.

(d) *Configuration*. Do not use an upstream screen or other restriction that could affect the flow ahead of the reference flow meter, unless the flow meter has been calibrated with such a restriction.

(e) *PDP calibration*. Calibrate a positive-displacement pump (PDP) to determine a flow-versus-PDP speed equation that accounts for flow leakage across sealing surfaces in the PDP as a function of PDP inlet pressure. Determine unique equation coefficients for each speed at which you operate the PDP. Calibrate a PDP flow meter as follows:

(1) Connect the system as shown in Figure 1 of this section.

(2) Leaks between the calibration flow meter and the PDP must be less than 0.3% of the total flow at the lowest calibrated flow point; for example, at the highest restriction and lowest PDP-speed point.

(3) While the PDP operates, maintain a constant temperature at the PDP inlet within ±2% of the mean absolute inlet temperature, $\overline{T}_{in}$.

(4) Set the PDP speed to the first speed point at which you intend to calibrate.

(5) Set the variable restrictor to its wide-open position.

(6) Operate the PDP for at least 3 min to stabilize the system. Continue operating the PDP and record the mean values of at least 30 seconds of sampled data of each of the following quantities:

(i) The mean flow rate of the reference flow meter, $\overline{n}_{ref}$. This may include several measurements of different quantities, such as reference meter pressures and temperatures, for calculating $\overline{n}_{ref}$.

(ii) The mean temperature at the PDP inlet, $\overline{T}_{in}$.

(iii) The mean static absolute pressure at the PDP inlet, $\overline{p}_{in}$.

(iv) The mean static absolute pressure at the PDP outlet, $\overline{p}_{out}$.

(v) The mean PDP speed, $\overline{f}_{nPDP}$.

(7) Incrementally close the restrictor valve to decrease the absolute pressure at the inlet to the PDP, $\bar{p}_{in}$.

(8) Repeat the steps in paragraphs (e)(6) and (7) of this section to record data at a minimum of six restrictor positions reflecting the full range of possible in-use pressures at the PDP inlet.

(9) Calibrate the PDP by using the collected data and the equations in § 1065.640.

(10) Repeat the steps in paragraphs (e)(6) through (9) of this section for each speed at which you operate the PDP.

(11) Use the equations in § 1065.642 to determine the PDP flow equation for emission testing.

(12) Verify the calibration by performing a CVS verification (i.e., propane check) as described in § 1065.341.

(13) Do not use the PDP below the lowest inlet pressure tested during calibration.

(f) *CFV calibration*. Calibrate a critical-flow venturi (CFV) to verify its discharge coefficient, C_d, at the lowest expected static differential pressure between the CFV inlet and outlet. Calibrate a CFV flow meter as follows:

(1) Connect the system as shown in Figure 1 of this section.

(2) Start the blower downstream of the CFV.

(3) While the CFV operates, maintain a constant temperature at the CFV inlet within ±2% of the mean absolute inlet temperature, $\bar{T}_{in}$.

(4) Leaks between the calibration flow meter and the CFV must be less than 0.3 % of the total flow at the highest restriction.

(5) Set the variable restrictor to its wide-open position.

(6) Operate the CFV for at least 3 min to stabilize the system. Continue operating the CFV and record the mean values of at least 30 seconds of sampled data of each of the following quantities:

(i) The mean flow rate of the reference flow meter, $\bar{\dot{n}}_{ref}$. This may include several measurements of different quantities, such as reference meter pressures and temperatures, for calculating $\bar{\dot{n}}_{ref}$.

(ii) Optionally, the mean dewpoint of the calibration air, $\bar{T}_{dew}$. See § 1065.640 for permissible assumptions.

(iii) The mean temperature at the venturi inlet, $\bar{T}_{in}$.

(iv) The mean static absolute pressure at the venturi inlet, $\bar{p}_{in}$.

(v) The mean static differential pressure between the CFV inlet and the CFV outlet, $\Delta\bar{p}_{CFV}$.

(7) Incrementally close the restrictor valve to decrease the absolute pressure at the inlet to the CFV, $\bar{p}_{in}$.

(8) Repeat the steps in paragraphs (f)(6) and (7) of this section to record mean data at a minimum of ten restrictor positions, such that you test the fullest practical range of $\Delta\bar{p}_{CFV}$ expected during testing. We do not require that you remove calibration components or CVS components to calibrate at the lowest possible restrictions.

(9) Determine C_d and the lowest allowable $\Delta\bar{p}_{CFV}$ as described in § 1065.640.

(10) Use C_d to determine CFV flow during an emission test. Do not use the CFV below the lowest allowed $\Delta\bar{p}_{CFV}$, as determined in § 1065.640.

(11) Verify the calibration by performing a CVS verification (i.e., propane check) as described in § 1065.341.

(12) If your CVS is configured to operate more than one CFV at a time in parallel, calibrate your CVS by one of the following:

(i) Calibrate every combination of CFVs according to this section and § 1065.640. Refer to § 1065.642 for instructions on calculating flow rates for this option.

(ii) Calibrate each CFV according to this section and § 1065.640. Refer to § 1065.642 for instructions on calculating flow rates for this option.

(g) *SSV calibration*. Calibrate a subsonic venturi (SSV) to determine its calibration coefficient, C_d , for the expected range of inlet pressures. Calibrate an SSV flow meter as follows:

(1) Connect the system as shown in Figure 1 of this section.

(2) Start the blower downstream of the SSV.

(3) Leaks between the calibration flow meter and the SSV must be less than 0.3 % of the total flow at the highest restriction.

(4) While the SSV operates, maintain a constant temperature at the SSV inlet within ±2 % of the mean absolute inlet temperature, $\bar{T}_{in}$.

(5) Set the variable restrictor or variable-speed blower to a flow rate greater than the greatest flow rate expected during testing. You may not extrapolate flow rates beyond calibrated values, so we recommend that you make sure the Reynolds number, $Re^{\#}$, at the SSV throat at the greatest calibrated flow rate is greater than the maximum $Re^{\#}$ expected during testing.

(6) Operate the SSV for at least 3 min to stabilize the system. Continue operating the SSV and record the mean of at least 30 seconds of sampled data of each of the following quantities:

(i) The mean flow rate of the reference flow meter, $\bar{\dot{n}}_{ref}$. This may include several measurements of different quantities, such as reference meter pressures and temperatures, for caculating $\bar{\dot{n}}_{ref}$.

(ii) Optionally, the mean dewpoint of the calibration air, $\bar{T}_{dew}$. See §1065.640 for permissible assumptions.

(iii) The mean temperature at the venturi inlet, $\bar{T}_{in}$.

(iv) The mean static absolute pressure at the venturi inlet, $\bar{p}_{in}$.

(v) Static differential pressure between the static pressure at the venturi inlet and the static pressure at the venturi throat, $\Delta\bar{p}_{SSV}$.

(7) Incrementally close the restrictor valve or decrease the blower speed to decrease the flow rate.

(8) Repeat the steps in paragraphs (g)(6) and (7) of this section to record data at a minimum of ten flow rates.

(9) Determine a functional form of C_d versus $Re^{\#}$ by using the collected data and the equations in §1065.640.

(10) Verify the calibration by performing a CVS verification (i.e., propane check) as described in §1065.341 using the new C_d versus $Re^{\#}$ equation.

(11) Use the SSV only between the minimum and maximum calibrated flow rates.

(12) Use the equations in §1065.642 to determine SSV flow during a test.

(h) *Ultrasonic flow meter calibration*. [Reserved]

Figure 1 of §1065.340—Schematic diagrams for diluted exhaust flow (CVS) calibration.

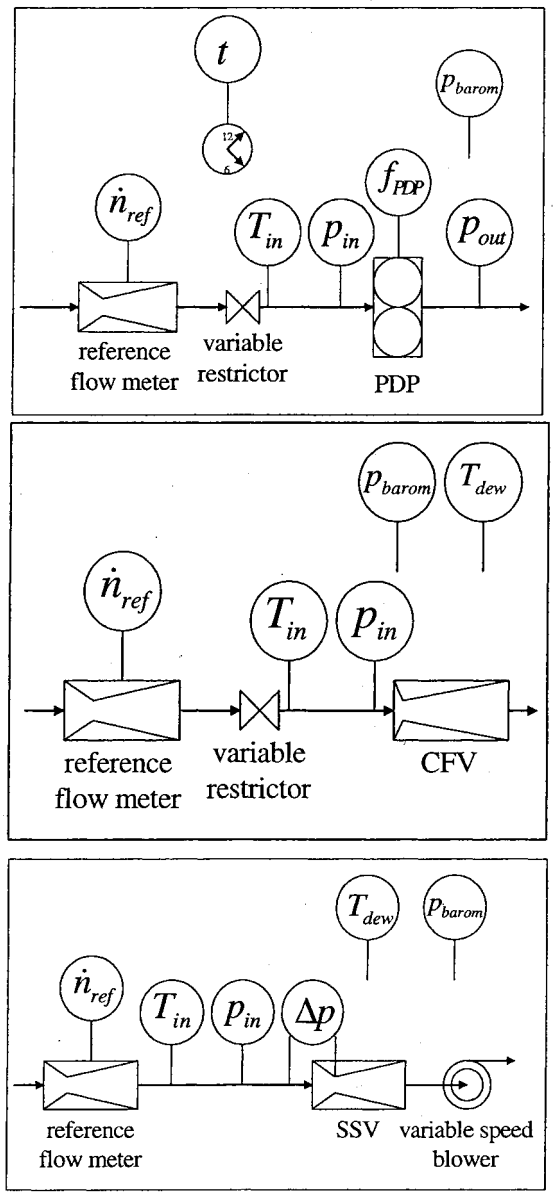

§ 1065.341 CVS and batch sampler verification (propane check).

(a) A propane check serves as a CVS verification to determine if there is a discrepancy in measured values of diluted exhaust flow. A propane check also serves as a batch-sampler verification to determine if there is a discrepancy in a batch sampling system that extracts a sample from a CVS, as described in paragraph (g) of this section. Using good engineering judgment and safe practices, this check may be performed using a gas other than propane, such as CO_2 or CO. A failed propane check might indicate one or more problems that may require corrective action, as follows:

(1) *Incorrect analyzer calibration.* Recalibrate, repair, or replace the FID analyzer.

(2) *Leaks.* Inspect CVS tunnel, connections, fasteners, and HC sampling system, and repair or replace components.

(3) *Poor mixing.* Perform the verification as described in this section while traversing a sampling probe across the tunnel's diameter, vertically and horizontally. If the analyzer response indicates any deviation exceeding ±2% of the mean measured concentration, consider operating the CVS at a higher flow rate or installing a mixing plate or orifice to improve mixing.

(4) *Hydrocarbon contamination in the sample system.* Perform the hydrocarbon-contamination verification as described in § 1065.520.

(5) *Change in CVS calibration.* Perform an in-situ calibration of the CVS flow meter as described in § 1065.340.

(6) *Other problems with the CVS or sampling verification hardware or software.*Inspect the CVS system, CVS verification hardware, and software for discrepancies.

(b) A propane check uses either a reference mass or a reference flow rate of C_3H_8 as a tracer gas in a CVS. Note that if you use a reference flow rate, account for any non-ideal gas behavior of C_3H_8 in the reference flow meter. Refer to § 1065.640 and § 1065.642, which describe how to calibrate and use certain flow meters. Do not use any ideal gas assumptions in § 1065.640 and § 1065.642. The propane check compares the calculated mass of injected C_3H_8 using HC measurements and CVS flow rate measurements with the reference value.

(c) Prepare for the propane check as follows:

(1) If you use a reference mass of C_3H_8 instead of a reference flow rate, obtain a cylinder charged with C_3H_8. Determine the reference cylinder's mass of C_3H_8 within ±0.5% of the amount of C_3H_8 that you expect to use.

(2) Select appropriate flow rates for the CVS and C_3H_8.

(3) Select a C_3H_8 injection port in the CVS. Select the port location to be as close as practical to the location where you introduce engine exhaust into the CVS. Connect the C_3H_8 cylinder to the injection system.

(4) Operate and stabilize the CVS.

(5) Preheat or precool any heat exchangers in the sampling system.

(6) Allow heated and cooled components such as sample lines, filters, chillers, and pumps to stabilize at operating temperature.

(7) You may purge the HC sampling system during stabilization.

(8) If applicable, perform a vacuum side leak verification of the HC sampling system as described in § 1065.345.

(9) You may also conduct any other calibrations or verifications on equipment or analyzers.

(d) Zero, span, and verify contamination of the HC sampling system, as follows:

(1) Select the lowest HC analyzer range that can measure the C_3H_8 concentration expected for the CVS and C_3H_8 flow rates.

(2) Zero the HC analyzer using zero air introduced at the analyzer port.

(3) Span the HC analyzer using C_3H_8 span gas introduced at the analyzer port.

(4) Overflow zero air at the HC probe or into a fitting between the HC probe and the transfer line.

(5) Measure the stable HC concentration of the HC sampling system as overflow zero air flows. For batch HC measurement, fill the batch container (such as a bag) and measure the HC overflow concentration.

(6) If the overflow HC concentration exceeds 2 μmol/mol, do not proceed

until contamination is eliminated. Determine the source of the contamination and take corrective action, such as cleaning the system or replacing contaminated portions.

(7) When the overflow HC concentration does not exceed 2 μmol/mol, record this value as x_{HCpre} and use it to correct for HC contamination as described in § 1065.660.

(e) Perform the propane check as follows:

(1) For batch HC sampling, connect clean storage media, such as evacuated bags.

(2) Operate HC measurement instruments according to the instrument manufacturer's instructions.

(3) If you will correct for dilution air background concentrations of HC, measure and record background HC in the dilution air.

(4) Zero any integrating devices.

(5) Begin sampling, and start any flow integrators.

(6) Release the contents of the C_3H_8 reference cylinder at the rate you selected. If you use a reference flow rate of C_3H_8, start integrating this flow rate.

(7) Continue to release the cylinder's contents until at least enough C_3H_8 has been released to ensure accurate quantification of the reference C_3H_8 and the measured C_3H_8.

(8) Shut off the C_3H_8 reference cylinder and continue sampling until you have accounted for time delays due to sample transport and analyzer response.

(9) Stop sampling and stop any integrators.

(f) Perform post-test procedure as follows:

(1) If you used batch sampling, analyze batch samples as soon as practical.

(2) After analyzing HC, correct for contamination and background.

(3) Calculate total C_3H_8 mass based on your CVS and HC data as described in § 1065.650 and § 1065.660, using the molar mass of C_3H_8, M_{C3H8}, instead the effective molar mass of HC, M_{HC}.

(4) If you use a reference mass, determine the cylinder's propane mass within ±0.5% and determine the C_3H_8 reference mass by subtracting the empty cylinder propane mass from the full cylinder propane mass.

(5) Subtract the reference C_3H_8 mass from the calculated mass. If this difference is within ±2.0 % of the reference mass, the CVS passes this verification. If not, take corrective action as described in paragraph (a) of this section.

(g) *Batch sampler verification.* You may repeat the propane check to verify a batch sampler, such as a PM secondary dilution system.

(1) Configure the HC sampling system to extract a sample near the location of the batch sampler's storage media (such as a PM filter). If the absolute pressure at this location is too low to extract an HC sample, you may sample HC from the batch sampler pump's exhaust. Use caution when sampling from pump exhaust because an otherwise acceptable pump leak downstream of a batch sampler flow meter will cause a false failure of the propane check.

(2) Repeat the propane check described in this section, but sample HC from the batch sampler.

(3) Calculate C_3H_8 mass, taking into account any secondary dilution from the batch sampler.

(4) Subtract the reference C_3H_8 mass from the calculated mass. If this difference is within ±5% of the reference mass, the batch sampler passes this verification. If not, take corrective action as described in paragraph (a) of this section.

§ 1065.345 Vacuum-side leak verification.

(a) *Scope and frequency.* Upon initial sampling system installation, after major maintenance, and before each test according to subpart F of this part for laboratory tests and according to subpart J of this part for field tests, verify that there are no significant vacuum-side leaks using one of the leak tests described in this section.

(b) *Measurement principles.* A leak may be detected either by measuring a small amount of flow when there should be zero flow, or by detecting the dilution of a known concentration of span gas when it flows through the vacuum side of a sampling system.

(c) *Low-flow leak test.* Test a sampling system for low-flow leaks as follows:

(1) Seal the probe end of the system by taking one of the following steps:

(i) Cap or plug the end of the sample probe.

(ii) Disconnect the transfer line at the probe and cap or plug the transfer line.

(iii) Close a leak-tight valve in-line between a probe and transfer line.

(2) Operate all vacuum pumps. After stabilizing, verify that the flow through the vacuum-side of the sampling system is less than 0.5 % of the system's normal in-use flow rate. You may estimate typical analyzer and bypass flows as an approximation of the system's normal in-use flow rate.

(d) *Dilution-of-span-gas leak test.* Test any analyzer, other than a FID, for dilution of span gas as follows, noting that this configuration requires an overflow span gas system:

(1) Prepare a gas analyzer as you would for emission testing.

(2) Supply span gas to the analyzer port and verify that it measures the span gas concentration within its expected measurement accuracy and repeatability.

(3) Route overflow span gas to one of the following locations in the sampling system:

(i) The end of the sample probe.

(ii) Disconnect the transfer line at the probe connection, and overflow the span gas at the open end of the transfer line.

(iii) A three-way valve installed in-line between a probe and its transfer line, such as a system overflow zero and span port.

(4) Verify that the measured overflow span gas concentration is within the measurement accuracy and repeatability of the analyzer. A measured value lower than expected indicates a leak, but a value higher than expected may indicate a problem with the span gas or the analyzer itself. A measured value higher than expected does not indicate a leak.

CO AND CO_2 MEASUREMENTS

§ 1065.350 H_2O interference verification for CO_2 NDIR analyzers.

(a) *Scope and frequency.* If you measure CO_2 using an NDIR analyzer, verify the amount of H_2O interference after initial analyzer installation and after major maintenance.

(b) *Measurement principles.* H_2O can interfere with an NDIR analyzer's response to CO_2.

If the NDIR analyzer uses compensation algorithms that utilize measurements of other gases to meet this interference verification, simultaneously conduct these other measurements to test the compensation algorithms during the analyzer interference verification.

(c) *System requirements.* A CO_2 NDIR analyzer must have an H_2O interference that is within ±2% of the flow-weighted mean CO_2 concentration expected at the standard, though we strongly recommend a lower interference that is within ±1%.

(d) *Procedure.* Perform the interference verification as follows:

(1) Start, operate, zero, and span the CO_2 NDIR analyzer as you would before an emission test.

(2) Create a water-saturated test gas by bubbling zero air that meets the specifications in §1065.750 through distilled water in a sealed vessel at (25 ±10) °C.

(3) Introduce the water-saturated test gas upstream of any sample dryer, if one is used during testing.

(4) Allow time for the analyzer response to stabilize. Stabilization time may include time to purge the transfer line and to account for analyzer response.

(5) While the analyzer measures the sample's concentration, record 30 seconds of sampled data. Calculate the arithmetic mean of this data. The analyzer meets the interference verification if this value is within ±2% of the flow-weighted mean concentration of CO_2 expected at the standard.

(e) *Exceptions.* The following exceptions apply:

(1) You may omit this verification if you can show by engineering analysis that for your CO_2 sampling system and your emission-calculation procedures, the H_2O interference for your CO_2 NDIR analyzer always affects your brake-specific emission results within ±0.5% of each of the applicable standards.

(2) You may use a CO_2 NDIR analyzer that you determine does not meet this verification, as long as you try to correct the problem and the measurement deficiency does not adversely affect

your ability to show that engines comply with all applicable emission standards.

§ 1065.355 H_2O and CO_2 interference verification for CO NDIR analyzers.

(a) *Scope and frequency.* If you measure CO using an NDIR analyzer, verify the amount of H_2O and CO_2 interference after initial analyzer installation and after major maintenance.

(b) *Measurement principles.* H_2O and CO_2 can positively interfere with an NDIR analyzer by causing a response similar to CO. If the NDIR analyzer uses compensation algorithms that utilize measurements of other gases to meet this interference verification, simultaneously conduct these other measurements to test the compensation algorithms during the analyzer interference verification.

(c) *System requirements.* A CO NDIR analyzer must have combined H_2O and CO_2 interference that is within ±2 % of the flow-weighted mean concentration of CO expected at the standard, though we strongly recommend a lower interference that is within ±1%.

(d) *Procedure.* Perform the interference verification as follows:

(1) Start, operate, zero, and span the CO NDIR analyzer as you would before an emission test.

(2) Create a water-saturated CO_2 test gas by bubbling a CO_2 span gas through distilled water in a sealed vessel at (25 ±10) °C.

(3) Introduce the water-saturated CO_2 test gas upstream of any sample dryer, if one is used during testing.

(4) Allow time for the analyzer response to stabilize. Stabilization time may include time to purge the transfer line and to account for analyzer response.

(5) While the analyzer measures the sample's concentration, record its output for 30 seconds. Calculate the arithmetic mean of this data.

(6) Multiply this mean value by the ratio of expected CO_2 to span gas CO_2 concentration. In other words, estimate the flow-weighted mean dry concentration of CO_2 expected during testing, and then divide this value by the concentration of CO_2 in the span gas used for this verification. Then multiply this ratio by the mean value recorded during this verification.

(7) The analyzer meets the interference verification if the result of paragraph (d)(6) of this section is within ±2 % of the flow-weighted mean concentration of CO expected at the standard.

(e) *Exceptions.* The following exceptions apply:

(1) You may omit this verification if you can show by engineering analysis that for your CO sampling system and your emission calculations procedures, the combined CO_2 and H_2O interference for your CO NDIR analyzer always affects your brake-specific CO emission results within ±0.5 % of the applicable CO standard.

(2) You may use a CO NDIR analyzer that you determine does not meet this verification, as long as you try to correct the problem and the measurement deficiency does not adversely affect your ability to show that engines comply with all applicable emission standards.

HYDROCARBON MEASUREMENTS

§ 1065.360 FID optimization and verification.

(a) *Scope and frequency.* For all FID analyzers perform the following steps:

(1) Calibrate a FID upon initial installation. Repeat the calibration as needed using good engineering judgment.

(2) Optimize a FID's response to various hydrocarbons after initial analyzer installation and after major maintenance.

(3) Determine a FID's methane (CH_4) response factor after initial analyzer installation and after major maintenance.

(4) Verify methane (CH_4) response within 185 days before testing.

(b) *Calibration.* Use good engineering judgment to develop a calibration procedure, such as one based on the FID-analyzer manufacturer's instructions and recommended frequency for calibrating the FID. Alternately, you may remove system components for off-site calibration. Calibrate using C_3H_8 calibration gases that meet the specifications of § 1065.750. We recommend FID

analyzer zero and span gases that contain approximately the flow-weighted mean concentration of O_2 expected during testing. If you use a FID to measure methane (CH_4) downstream of a nonmethane cutter, you may calibrate that FID using CH_4 calibration gases with the cutter. Regardless of the calibration gas composition, calibrate on a carbon number basis of one (C_1). For example, if you use a C_3H_8 span gas of concentration 200 µmol/mol, span the FID to respond with a value of 600 µmol/mol.

(c) *FID response optimization*. Use good engineering judgment for initial instrument start-up and basic operating adjustment using FID fuel and zero air. Heated FIDs must be within their required operating temperature ranges. Optimize FID response at the most common analyzer range expected during emission testing. Optimization involves adjusting flows and pressures of FID fuel, burner air, and sample to minimize response variations to various hydrocarbon species in the exhaust. Use good engineering judgment to trade off peak FID response to propane calibration gases to achieve minimal response variations to different hydrocarbon species. For an example of trading off response to propane for relative responses to other hydrocarbon species, see SAE 770141 (incorporated by reference in §1065.1010). Determine the optimum flow rates for FID fuel, burner air, and sample and record them for future reference.

(d) *CH_4 response factor determination*. Since FID analyzers generally have a different response to CH_4 versus C_3H_8, determine each FID analyzer's CH_4 response factor, RF_{CH4}, after FID optimization. Use the most recent RF_{CH4} measured according to this section in the calculations for HC determination described in §1065.660 to compensate for CH_4 response. Determine RF_{CH4} as follows, noting that you do not determine RF_{CH4} for FIDs that are calibrated and spanned using CH_4 with a nonmethane cutter:

(1) Select a C_3H_8 span gas that meets the specifications of §1065.750. Record the C_3H_8 concentration of the gas.

(2) Select a CH_4 span gas that meets the specifications of §1065.750. Record the CH_4 concentration of the gas.

(3) Start and operate the FID analyzer according to the manufacturer's instructions.

(4) Confirm that the FID analyzer has been calibrated using C_3H_8. Calibrate on a carbon number basis of one (C_1). For example, if you use a C_3H_8 span gas of concentration 200 µmol/mol, span the FID to respond with a value of 600 µmol/mol.

(5) Zero the FID with a zero gas that you use for emission testing.

(6) Span the FID with the C_3H_8 span gas that you selected under paragraph (d)(1) of this section.

(7) Introduce at the sample port of the FID analyzer, the CH_4 span gas that you selected under paragraph (d)(2) of this section.

(8) Allow time for the analyzer response to stabilize. Stabilization time may include time to purge the analyzer and to account for its response.

(9) While the analyzer measures the CH_4 concentration, record 30 seconds of sampled data. Calculate the arithmetic mean of these values.

(10) Divide the mean measured concentration by the recorded span concentration of the CH_4 calibration gas. The result is the FID analyzer's response factor for CH_4, RF_{CH4}.

(e) *FID methane (CH_4) response verification*. If the value of RF_{CH4} from paragraph (d) of this section is within ±5.0% of its most recent previously determined value, the FID passes the methane response verification. For example, if the most recent previous value for RF_{CH4} was 1.05 and it changed by +0.05 to become 1.10 or it changed by −0.05 to become 1.00, either case would be acceptable because +4.8% is less than +5.0%.

(1) Verify that the pressures and flow rates of FID fuel, burner air, and sample are each within ±0.5% of their most recent previously recorded values, as described in paragraph (c) of this section. You may adjust these flow rates as necessary. Determine a new RF_{CH4} as described in paragraph (d) of this section.

(2) If RF_{CH4} is still not within ±5.0% of its most recently determined value after adjusting flow rates, re-optimize the FID response as described in paragraph (c) of this section.

(3) Determine a new RF_{CH4} as described in paragraph (d) of this section. Use this new value of RF_{CH4} in the calculations for HC determination, as described in § 1065.660.

§ 1065.362 Non-stoichiometric raw exhaust FID O_2 interference verification.

(a) *Scope and frequency.* If you use FID analyzers for raw exhaust measurements from engines that operate in a non-stoichiometric mode of combustion (e.g., compression-ignition, lean-burn), verify the amount of FID O_2 interference upon initial installation and after major maintenance.

(b) *Measurement principles.* Changes in O_2 concentration in raw exhaust can affect FID response by changing FID flame temperature. Optimize FID fuel, burner air, and sample flow to meet this verification. Verify FID performance with the compensation algorithms for FID O_2 interference that you have active during an emission test.

(c) *System requirements.* Any FID analyzer used during testing must meet the FID O_2 interference verification according to the procedure in this section.

(d) *Procedure.* Determine FID O_2 interference as follows:

(1) Select two span reference gases that meet the specifications in § 1065.750 and contain C_3H_8 near 100% of span for HC. You may use CH_4 span reference gases for FIDs calibrated on CH_4 with a nonmethane cutter. Select the two balance gas concentrations such that the concentrations of O_2 and N_2 represent the minimum and maximum O_2 concentrations expected during testing.

(2) Confirm that the FID analyzer meets all the specifications of § 1065.360.

(3) Start and operate the FID analyzer as you would before an emission test. Regardless of the FID burner's air source during testing, use zero air as the FID burner's air source for this verification.

(4) Zero the FID analyzer using the zero gas used during emission testing.

(5) Span the FID analyzer using the span gas used during emission testing.

(6) Check the zero response of the FID analyzer using the zero gas used during emission testing. If the mean zero response of 30 seconds of sampled data is within ±0.5% of the span reference value used in paragraph (d)(5) of this section, then proceed to the next step; otherwise restart the procedure at paragraph (d)(4) of this section.

(7) Check the analyzer response using the span gas that has the minimum concentration of O_2 expected during testing. Record the mean response of 30 seconds of stabilized sample data as $x_{O2minHC}$.

(8) Check the zero response of the FID analyzer using the zero gas used during emission testing. If the mean zero response of 30 seconds of stabilized sample data is within ±0.5% of the span reference value used in paragraph (d)(5) of this section, then proceed to the next step; otherwise restart the procedure at paragraph (d)(4) of this section.

(9) Check the analyzer response using the span gas that has the maximum concentration of O_2 expected during testing. Record the mean response of 30 seconds of stabilized sample data as $x_{O2maxHC}$.

(10) Check the zero response of the FID analyzer using the zero gas used during emission testing. If the mean zero response of 30 seconds of stabilized sample data is within ±0.5% of the span reference value used in paragraph (d)(5) of this section, then proceed to the next step; otherwise restart the procedure at paragraph (d)(4) of this section.

(11) Calculate the percent difference between $x_{O2maxHC}$ and its reference gas concentration. Calculate the percent difference between $x_{O2minHC}$ and its reference gas concentration. Determine the maximum percent difference of the two. This is the O_2 interference.

(12) If the O_2 interference is within ±1.5%, then the FID passes the O_2 interference check; otherwise perform one or more of the following to address the deficiency:

(i) Select zero and span gases for emission testing that contain higher or lower O_2 concentrations.

(ii) Adjust FID burner air, fuel, and sample flow rates. Note that if you adjust these flow rates to meet the O_2 interference verification, you must reverify with the adjusted flow rates that the FID meets the CH_4 response factor verification according to § 1065.360.

(iii) Repair or replace the FID.

(iv) Demonstrate that the deficiency does not adversely affect your ability to demonstrate compliance with the applicable emission standards.

§ 1065.365 Nonmethane cutter penetration fractions.

(a) *Scope and frequency.* If you use a FID analyzer and a nonmethane cutter (NMC) to measure methane (CH_4), determine the nonmethane cutter's penetration fractions of methane, PF_{CH4}, and ethane, PF_{C2H6}. Perform this verification after installing the nonmethane cutter. Repeat this verification within 185 days of testing to verify that the catalytic activity of the cutter has not deteriorated. Note that because nonmethane cutters can deteriorate rapidly and without warning if they are operated outside of certain ranges of gas concentrations and outside of certain temperature ranges, good engineering judgment may dictate that you determine a nonmethane cutter's penetration fractions more frequently.

(b) *Measurement principles.* A nonmethane cutter is a heated catalyst that removes nonmethane hydrocarbons from the exhaust stream before the FID analyzer measures the remaining hydrocarbon concentration. An ideal nonmethane cutter would have PF_{CH4} of 1.000, and the penetration fraction for all other hydrocarbons would be 0.000, as represented by PF_{C2H6}. The emission calculations in § 1065.660 use this section's measured values of PF_{CH4} and PF_{C2H6} to account for less than ideal NMC performance.

(c) *System requirements.* We do not limit NMC penetration fractions to a certain range. However, we recommend that you optimize a nonmethane cutter by adjusting its temperature to achieve $PF_{CH4} > 0.95$ and $PF_{C2H6} < 0.02$ as determined by paragraphs (d) and (e) of this section, as applicable. If we use a nonmethane cutter for testing, it will meet this recommendation. If adjusting NMC temperature does not result in achieving both of these specifications simultaneously, we recommend that you replace the catalyst material.

Use the most recently determined penetration values from this section to calculate HC emissions according to § 1065.660 and § 1065.665 as applicable.

(d) *Procedure for a FID calibrated with the NMC.* If your FID arrangement is such that a FID is always calibrated to measure CH_4 with the NMC, then span that FID with the NMC cutter using a CH_4 span gas, set that FID's CH_4 penetration fraction, PF_{CH4}, equal to 1.0 for all emission calculations, and determine its ethane (C_2H_6) penetration fraction, PF_{C2H6}. as follows:

(1) Select a CH_4 gas mixture and a C_2H_6 analytical gas mixture and ensure that both mixtures meet the specifications of § 1065.750. Select a CH_4 concentration that you would use for spanning the FID during emission testing and select a C_2H_6 concentration that is typical of the peak NMHC concentration expected at the hydrocarbon standard or equal to THC analyzer's span value.

(2) Start, operate, and optimize the nonmethane cutter according to the manufacturer's instructions, including any temperature optimization.

(3) Confirm that the FID analyzer meets all the specifications of § 1065.360.

(4) Start and operate the FID analyzer according to the manufacturer's instructions.

(5) Zero and span the FID with the cutter and use CH_4 span gas to span the FID with the cutter. Note that you must span the FID on a C_1 basis. For example, if your span gas has a CH_4 reference value of 100 μ/mol, the correct FID response to that span gas is 100 μ/mol because there is one carbon atom per CH_4 molecule.

(6) Introduce the C_2H_6 analytical gas mixture upstream of the nonmethane cutter.

(7) Allow time for the analyzer response to stabilize. Stabilization time may include time to purge the nonmethane cutter and to account for the analyzer's response.

(8) While the analyzer measures a stable concentration, record 30 seconds of sampled data. Calculate the arithmetic mean of these data points.

(9) Divide the mean by the reference value of C_2H_6, converted to a C_1 basis. The result is the C_2H_6 penetration fraction, PF_{C2H6}. Use this penetration fraction and the CH_4 penetration fraction, which is set equal to 1.0, in emission calculations according to § 1065.660 or § 1065.665, as applicable.

(e) *Procedure for a FID calibrated by bypassing the NMC.* If you use a FID with an NMC that is calibrated by bypassing the NMC, determine penetration fractions as follows:

(1) Select CH_4 and C_2H_6 analytical gas mixtures that meet the specifications of § 1065.750 with the CH_4 concentration typical of its peak concentration expected at the hydrocarbon standard and the C_2H_6 concentration typical of the peak total hydrocarbon (THC) concentration expected at the hydrocarbon standard or the THC analyzer span value.

(2) Start and operate the nonmethane cutter according to the manufacturer's instructions, including any temperature optimization.

(3) Confirm that the FID analyzer meets all the specifications of § 1065.360.

(4) Start and operate the FID analyzer according to the manufacturer's instructions.

(5) Zero and span the FID as you would during emission testing. Span the FID by bypassing the cutter and by using C_3H_8 span gas to span the FID. Note that you must span the FID on a C_1 basis. For example, if your span gas has a propane reference value of 100 μ/mol, the correct FID response to that span gas is 300 μ/mol because there are three carbon atoms per C_3H_8 molecule.

(6) Introduce the C_2H_6 analytical gas mixture upstream of the nonmethane cutter.

(7) Allow time for the analyzer response to stabilize. Stabilization time may include time to purge the nonmethane cutter and to account for the analyzer's response.

(8) While the analyzer measures a stable concentration, record 30 seconds of sampled data. Calculate the arithmetic mean of these data points.

(9) Reroute the flow path to bypass the nonmethane cutter, introduce the C_2H_6 analytical gas mixture to the bypass, and repeat the steps in paragraphs (e)(7) through (8) of this section.

(10) Divide the mean C_2H_6 concentration measured through the nonmethane cutter by the mean concentration measured after bypassing the nonmethane cutter. The result is the C_2H_6 penetration fraction, PF_{C2H6}. Use this penetration fraction according to § 1065.660 or § 1065.665, as applicable.

(11) Repeat the steps in paragraphs (e)(6) through (10) of this section, but with the CH_4 analytical gas mixture instead of C_2H_6. The result will be the CH_4 penetration fraction, PF_{CH4}. Use this penetration fraction according to § 1065.660 or § 1065.665, as applicable.

NO_X MEASUREMENTS

§ 1065.370 CLD CO_2 and H_2O quench verification.

(a) *Scope and frequency.* If you use a CLD analyzer to measure NO_X, verify the amount of H_2O and CO_2 quench after installing the CLD analyzer and after major maintenance.

(b) *Measurement principles.* H_2O and CO_2 can negatively interfere with a CLD's NO_X response by collisional quenching, which inhibits the chemiluminescent reaction that a CLD utilizes to detect NO_X. The calculations in § 1065.672 for H_2O quench account for the water vapor in humidified NO span gas. The procedure and the calculations scale the quench results to the water vapor and CO_2 concentrations expected during testing. If the CLD analyzer uses quench compensation algorithms that utilize H_2O and/or CO_2 measurement instruments, use these instruments to measure H_2O and/or CO_2 and evaluate quench with the compensation algorithms applied.

(c) *System requirements.* A CLD analyzer must have a combined H_2O and CO_2 quench of ±2% or less, though we strongly recommend a quench of ±1% or less. Combined quench is the sum of the CO_2 quench determined as described in paragraph (d) of this section, plus the H_2O quench determined in paragraph (e) of this section.

(d) *CO_2 quench verification procedure.* Use the following method to determine CO_2 quench, or use good engineering judgment to develop a different protocol:

(1) Use PTFE tubing to make necessary connections.

(2) Connect a pressure-regulated CO_2 span gas to one of the inlets of a three-way valve made of 300 series stainless steel. Use a CO_2 span gas that meets the specifications of § 1065.750 and attempt to use a concentration that is approximately twice the maximum CO_2 concentration expected to enter the

CLD sample port during testing, if available.

(3) Connect a pressure-regulated purified N_2 gas to the valve's other inlet. Use a purified N_2 gas that meets the specifications of § 1065.750.

(4) Connect the valve's single outlet to the balance-gas port of a gas divider that meets the specifications in § 1065.248.

(5) Connect a pressure-regulated NO span gas to the span-port of the gas divider. Use an NO span gas that meets the specifications of § 1065.750. Attempt to use an NO concentration that is approximately twice the maximum NO concentration expected during testing, if available.

(6) Configure the gas divider such that nearly equal amounts of the span gas and balance gas are blended with each other. Apply viscosity corrections as necessary to appropriately ensure correct gas division.

(7) While flowing balance and span gases through the gas divider, stabilize the CO_2 concentration downstream of the gas divider and measure the CO_2 concentration with an NDIR analyzer that has been prepared for emission testing. Record this concentration, $x_{CO2meas}$, and use it in the quench verification calculations in § 1065.675.

(8) Measure the NO concentration downstream of the gas divider. If the CLD has an operating mode in which it detects NO-only, as opposed to total NO_X, operate the CLD in the NO-only operating mode. Record this concentration, $x_{NO,CO2}$, and use it in the quench verification calculations in § 1065.675.

(9) Switch the three-way valve so 100% purified N_2 flows to the gas divider's balance-port inlet. Monitor the CO_2 at the gas divider's outlet until its concentration stabilizes at zero.

(10) Measure NO concentration at the gas divider's outlet. Record this value, $x_{NO,N2}$, and use it in the quench verification calculations in § 1065.675.

(11) Use the values recorded according to this paragraph (d) of this section and paragraph (e) of this section to calculate quench as described in § 1065.675.

(e) *H_2O quench verification procedure.* Use the following method to determine H_2O quench, or use good engineering judgment to develop a different protocol:

(1) Use PTFE tubing to make necessary connections.

(2) If the CLD has an operating mode in which it detects NO-only, as opposed to total NO_X, operate the CLD in the NO-only operating mode.

(3) Measure an NO calibration span gas that meets the specifications of § 1065.750 and is near the maximum concentration expected during testing. Record this concentration, x_{NOdry}.

(4) Humidify the gas by bubbling it through distilled water in a sealed vessel. We recommend that you humidify the gas to the highest sample dewpoint that you estimate during emission sampling. Regardless of the humidity during this test, the quench verification calculations in § 1065.675 scale the recorded quench to the highest dewpoint that you expect entering the CLD sample port during emission sampling.

(5) If you do not use any sample dryer for NO_X during emissions testing, record the vessel water temperature as T_{dew}, and its pressure as p_{total} and use these values according to § 1065.645 to calculate the amount of water entering the CLD sample port, $x_{H2Omeas}$. If you do use a sample dryer for NO_X during emissions testing, measure the humidity of the sample just upstream of the CLD sample port and use the measured humidity according to § 1065.645 to calculate the amount of water entering the CLD sample port, $x_{H2Omeas}$.

(6) To prevent subsequent condensation, make sure that any humidified sample will not be exposed to temperatures lower than T_{dew} during transport from the sealed vessel's outlet to the CLD. We recommend using heated transfer lines.

(7) Introduce the humidified sample upstream of any sample dryer, if one is used.

(8) Use the CLD to measure the NO concentration of the humidified span gas and record this value, x_{NOwet}.

(9) Use the recorded values from this paragraph (e) to calculate the quench as described in § 1065.675.

(10) Use the values recorded according to this paragraph (e) of this section and paragraph (d) of this section to calculate quench as described in § 1065.675.

(f) *Corrective action.* If the sum of the H_2O quench plus the CO_2 quench is not

within ±2%, take corrective action by repairing or replacing the analyzer. Before using a CLD for emission testing, demonstrate that the corrective action resulted in a value within ±2% combined quench.

(g) *Exceptions.* The following exceptions apply:

(1) You may omit this verification if you can show by engineering analysis that for your NO_X sampling system and your emission calculations procedures, the combined CO_2 and H_2O interference for your NO_X CLD analyzer always affects your brake-specific NO_X emission results within no more than ±1.0% of the applicable NO_X standard.

(2) You may use a NO_X CLD analyzer that you determine does not meet this verification, as long as you try to correct the problem and the measurement deficiency does not adversely affect your ability to show that engines comply with all applicable emission standards.

§ 1065.372 NDUV analyzer HC and H_2O interference verification.

(a) *Scope and frequency.* If you measure NO_X using an NDUV analyzer, verify the amount of H_2O and hydrocarbon interference after initial analyzer installation and after major maintenance.

(b) *Measurement principles.* Hydrocarbons and H_2O can positively interfere with an NDUV analyzer by causing a response similar to NO_X. If the NDUV analyzer uses compensation algorithms that utilize measurements of other gases to meet this interference verification, simultaneously conduct such measurements to test the algorithms during the analyzer interference verification.

(c) *System requirements.* A NO_X NDUV analyzer must have combined H_2O and HC interference within ±2% of the flow-weighted mean concentration of NO_X expected at the standard, though we strongly recommend keeping interference within ±1%.

(d) *Procedure.* Perform the interference verification as follows:

(1) Start, operate, zero, and span the NO_X NDUV analyzer according to the instrument manufacturer's instructions.

(2) We recommend that you extract engine exhaust to perform this verification. Use a CLD that meets the specifications of subpart C of this part to quantify NO_X in the exhaust. Use the CLD response as the reference value. Also measure HC in the exhaust with a FID analyzer that meets the specifications of subpart C of this part. Use the FID response as the reference hydrocarbon value.

(3) Upstream of any sample dryer, if one is used during testing, introduce the engine exhaust to the NDUV analyzer.

(4) Allow time for the analyzer response to stabilize. Stabilization time may include time to purge the transfer line and to account for analyzer response.

(5) While all analyzers measure the sample's concentration, record 30 seconds of sampled data, and calculate the arithmetic means for the three analyzers.

(6) Subtract the CLD mean from the NDUV mean.

(7) Multiply this difference by the ratio of the flow-weighted mean HC concentration expected at the standard to the HC concentration measured during the verification. The analyzer meets the interference verification of this section if this result is within ±2% of the HC concentration expected at the standard.

(e) *Exceptions.* The following exceptions apply:

(1) You may omit this verification if you can show by engineering analysis that for your NO_X sampling system and your emission calculations procedures, the combined HC and H_2O interference for your NO_X NDUV analyzer always affects your brake-specific NO_X emission results by less than 0.5% of the applicable NO_X standard.

(2) You may use a NO_X NDUV analyzer that you determine does not meet this verification, as long as you try to correct the problem and the measurement deficiency does not adversely affect your ability to show that engines comply with all applicable emission standards.

§ 1065.376 Chiller NO_2 penetration.

(a) *Scope and frequency.* If you use a chiller to dry a sample upstream of a

NO_X measurement instrument, but you don't use an NO_2-to-NO converter upstream of the chiller, you must perform this verification for chller NO_2 penetration. Perform this verification after initial installation and after major maintenance.

(b) *Measurement principles.* A chiller removes water, which can otherwise interfere with a NO_X measurement. However, liquid water in an improperly designed chiller can remove NO_2 from the sample. If a chiller is used without an NO_2-to-NO converter upstream, it could therefore remove NO_2 from the sample prior NO_X measurement.

(c) *System requirements.* A chiller must allow for measuring at least 95% of the total NO_2 at the maximum expected concentration of NO_2.

(d) *Procedure.* Use the following procedure to verify chiller performance:

(1) *Instrument setup.* Follow the analyzer and chiller manufacturers' start-up and operating instructions. Adjust the analyzer and chiller as needed to optimize performance.

(2) *Equipment setup.* Connect an ozonator's inlet to a zero-air or oxygen source and connect its outlet to one port of a three-way tee fitting. Connect an NO span gas to another port of the tee. Connect a heated line at 100 °C to the last port, and connect a heated three-way tee to the other end of the line. Connect a dewpoint generator, set at a dewpoint of 50 °C, to one end of a heated line at 100 °C. Connect the other end of the line to the heated tee and connect a third 100 °C heated line to the chiller inlet. Provide an overflow vent line at the chiller inlet.

(3) *Adjustments.* For the following adjustment steps, set the analyzer to measure only NO (i.e., NO mode), or only read the NO channel of the analyzer:

(i) With the dewpoint generator and the ozonator off, adjust the NO and zero-gas flows so the NO concentration at the analyzer is at least two times the peak total NO_X concentration expected during testing at the standard. Verify that gas is flowing out of the overflow vent line.

(ii) Turn on the dewpoint generator and adjust its flow so the NO concentration at the analyzer is at least at the peak total NO_X concentration expected during testing at the standard. Verify that gas is flowing out of the overflow vent line.

(iii) Turn on the ozonator and adjust the ozonator so the NO concentration measured by the analyzer decreases by the same amount as the maximum concentration of NO_2 expected during testing. This ensures that the ozonator is generating NO_2 at the maximum concentration expected during testing.

(4) *Data collection.* Maintain the ozonator adjustment in paragraph (d)(3) of this section, and keep the NO_X analyzer in the NO only mode or only read the NO channel of the analyzer.

(i) Allow for stabilization, accounting only for transport delays and instrument response.

(ii) Calculate the mean of 30 seconds of sampled data from the analyzer and record this value as NO_{ref}.

(iii) Switch the analyzer to the total NO_X mode, (that is, sum the NO and NO_2 channels of the analyzer) and allow for stabilization, accounting only for transport delays and instrument response.

(iv) Calculate the mean of 30 seconds of sampled data from the analyzer and record this value as NOx_{meas}.

(v) Turn off the ozonator and allow for stabilization, accounting only for transport delays and instrument response.

(vi) Calculate the mean of 30 seconds of sampled data from the analyzer and record this value as NO_{xref}.

(5) *Performance evaluation.* Divide the quantity of $(NO_{xmeas} - NO_{ref})$ by the quantity of $(NO_{xref} - NO_{ref})$. If the result is less than 95%, repair or replace the chiller.

(e) *Exceptions.* The following exceptions apply:

(1) You may omit this verification if you can show by engineering analysis that for your NO_X sampling system and your emission calculations procedures, the chiller always affects your brake-specific NO_X emission results by less than 0.5% of the applicable NO_X standard.

(2) You may use a chiller that you determine does not meet this verification, as long as you try to correct the problem and the measurement deficiency does not adversely affect

your ability to show that engines comply with all applicable emission standards.

§ 1065.378 NO_2-to-NO converter conversion verification.

(a) *Scope and frequency.* If you use an analyzer that measures only NO to determine NO_X, you must use an NO_2-to-NO converter upstream of the analyzer. Perform this verification after installing the converter, after major maintenance and within 35 days before an emission test. This verification must be repeated at this frequency to verify that the catalytic activity of the NO_2-to-NO converter has not deteriorated.

(b) *Measurement principles.* An NO_2-to-NO converter allows an analyzer that measures only NO to determine total NO_X by converting the NO_2 in exhaust to NO.

(c) *System requirements.* An NO_2-to-NO converter must allow for measuring at least 95% of the total NO_2 at the maximum expected concentration of NO_2.

(d) *Procedure.* Use the following procedure to verify the performance of a NO_2-to-NO converter:

(1) *Instrument setup.* Follow the analyzer and NO_2-to-NO converter manufacturers' start-up and operating instructions. Adjust the analyzer and converter as needed to optimize performance.

(2) *Equipment setup.* Connect an ozonator's inlet to a zero-air or oxygen source and connect its outlet to one port of a 4-way cross fitting. Connect an NO span gas to another port. Connect the NO_2-to-NO converter inlet to another port, and connect an overflow vent line to the last port.

(3) *Adjustments.* Take the following steps to make adjustments:

(i) With the NO_2-to-NO converter in the bypass mode (i.e., NO mode) and the ozonator off, adjust the NO and zero-gas flows so the NO concentration at the analyzer is at the peak total NO_X concentration expected during testing. Verify that gas is flowing out of the overflow vent.

(ii) With the NO_2-to-NO converter still in the bypass mode, turn on the ozonator and adjust the ozonator so the NO concentration measured by the analyzer decreases by the same amount as maximum concentration of NO_2 expected during testing. This ensures that the ozonator is generating NO_2 at the maximum concentration expected during testing.

(4) *Data collection.* Maintain the ozonator adjustment in paragraph (d)(3) of this section, and keep the NO_X analyzer in the NO only mode (i.e., bypass the NO_2-to-NO converter).

(i) Allow for stabilization, accounting only for transport delays and instrument response.

(ii) Calculate the mean of 30 seconds of sampled data from the analyzer and record this value as NO_{ref}.

(iii) Switch the analyzer to the total NO_X mode (that is, sample with the NO_2-to-NO converter) and allow for stabilization, accounting only for transport delays and instrument response.

(iv) Calculate the mean of 30 seconds of sampled data from the analyzer and record this value as NO_{xmeas}.

(v) Turn off the ozonator and allow for stabilization, accounting only for transport delays and instrument response.

(vi) Calculate the mean of 30 seconds of sampled data from the analyzer and record this value as NO_{xref}.

(5) *Performance evaluation.* Divide the quantity of $(NO_{xmeas} - NO_{ref})$ by the quantity of $(NO_{xref} - NO_{ref})$. If the result is less than 95%, repair or replace the NO_2-to-NO converter.

(e) *Exceptions.* The following exceptions apply:

(1) You may omit this verification if you can show by engineering analysis that for your NO_X sampling system and your emission calculations procedures, the converter always affects your brake-specific NO_X emission results by less than 0.5% of the applicable NO_X standard.

(2) You may use a converter that you determine does not meet this verification, as long as you try to correct the problem and the measurement deficiency does not adversely affect your ability to show that engines comply with all applicable emission standards.

PM MEASUREMENTS

§ 1065.390 PM balance verifications and weighing process verification.

(a) *Scope and frequency.* This section describes three verifications. The first

verification requires an independent verification of PM balance performance, and this must be performed within 370 days before emission testing. The second verification requires zeroing and spanning the balance, and this must be performed within 12 h before weighing. The third verification requires comparing a current mass determination of pooled reference samples with the previous mass determination of the pooled reference samples. This verification must be performed within 12 h before weighing.

(b) *Independent verification.* Have the balance manufacturer (or a representative approved by the balance manufacturer) verify the balance performance within 370 days of testing.

(c) *Zeroing and spanning.* You must verify balance performance by zeroing and spanning it with at least one calibration weight, and any weights you use must that meet the specifications in §1065.790 to perform this verification.

(1) Use a manual procedure in which you zero the balance and span the balance with at least one calibration weight. If you normally use mean values by repeating the weighing process to improve the accuracy and precision of PM measurements, use the same process to verify balance performance.

(2) You may use an automated procedure to verify balance performance. For example many balances have internal calibration weights that are used automatically to verify balance performance. Note that if you use internal balance weights, the weights must meet the specifications in §1065.790 to perform this verification.

(d) *Reference sample weighing.* You must also verify the PM-weighing environment and weighing process by weighing reference PM sample media. Repeated weighing of a reference mass must return the same value within ±10 μg or ±10% of the net PM mass expected at the standard (if known), whichever is higher. Perform this verification as follows:

(1) Keep at least two samples of unused PM sample media in the PM-stabilization environment. Use these as references. If you collect PM with filters, select unused filters of the same material and size for use as references. You may periodically replace references, using good engineering judgment.

(2) Stabilize references in the PM stabilization environment. Consider references stabilized if they have been in the PM-stabilization environment for a minimum of 30 min, and the PM-stabilization environment has been within the specifications of §1065.190(d) for at least the preceding 60 min.

(3) Exercise the balance several times with a reference sample. We recommend weighing ten samples without recording the values.

(4) Zero and span the balance.

(5) Weigh each of the reference samples and record their masses. We recommend using substitution weighing as described in §1065.590(j). If you normally use mean values by repeating the weighing process to improve the accuracy and precision of PM measurements, use the same process to measure reference masses.

(6) Record the balance environment dewpoint, ambient temperature, and atmospheric pressure.

(7) Use the recorded ambient conditions to correct results for buoyancy as described in §1065.690. Record the buoyancy-corrected mass of each of the references.

(8) Subtract each of the reference's buoyancy-corrected masses from the most recent previous determinations of their masses.

(9) If the mean of the reference's masses changes by more than that allowed under paragraph (d) of this section, then invalidate all PM results that were determined between the two times that the reference masses were determined.

§1065.395 Inertial PM balance verifications.

This section describes how to verify the performance of an inertial PM balance.

(a) *Independent verification.* Have the balance manufacturer (or a representative approved by the balance manufacturer) verify the inertial balance performance within 370 days before testing.

(b) *Other verifications.* Perform other verifications using good engineering

judgment and instrument manufacturer recommendations.

Subpart E—Engine Selection, Preparation, and Maintenance

§ 1065.401 Test engine selection.

While all engine configurations within a certified engine family must comply with the applicable standards in the standard-setting part, you need not test each configuration for certification.

(a) Select an engine configuration within the engine family for testing, as follows:

(1) Test the engine that we specify, whether we issue general guidance or give you specific instructions.

(2) If we do not tell you which engine to test, follow any instructions in the standard-setting part.

(3) If we do not tell you which engine to test and the standard-setting part does not include specifications for selecting test engines, use good engineering judgment to select the engine configuration within the engine family that is most likely to exceed an emission standard.

(b) In the absence of other information, the following characteristics are appropriate to consider when selecting the engine to test:

(1) Maximum fueling rates.

(2) Maximum loads.

(3) Maximum in-use speeds.

(4) Highest sales volume.

(c) For our testing, we may select any engine configuration within the engine family.

§ 1065.405 Test engine preparation and maintenance.

(a) If you are testing an emission-data engine for certification, make sure it is built to represent production engines. This includes governors that you normally install on production engines. If you do not install governors on production engines, simulate a governor that is representative of a governor that others will install on your production engines.

(b) Run the test engine, with all emission-control systems operating, long enough to stabilize emission levels. Unless otherwise specified in the standard-setting part, you may consider emission levels stable without measurement if you accumulate 12 h of operation for a spark-ignition engine or 125 h for a compression-ignition engine. If the engine needs more or less operation to stabilize emission levels, record your reasons and the methods for doing this, and give us these records if we ask for them. To ensure consistency between low-hour engines and deterioration factors, you must use the same stabilization procedures for all emission-data engines within an engine family.

(c) Record any maintenance, modifications, parts changes, diagnostic or emissions testing and document the need for each event. You must provide this information if we request it.

(d) For accumulating operating hours on your test engines, select engine operation that represents normal in-use operation for the engine family.

(e) If your engine will be used in a vehicle equipped with a canister for storing evaporative hydrocarbons for eventual combustion in the engine, attach a canister to the engine before running an emission test. You may request to omit using an evaporative canister during testing if you can show that it would not affect your ability to show compliance with the applicable emission standards. You do not have to accumulate engine operation before emission testing with an installed canister. Prior to an emission test, use the following steps to attach a canister to your engine:

(1) Use a canister and plumbing arrangement that represents the in-use configuration of the largest capacity canister in all expected applications.

(2) Use a canister that is fully loaded with fuel vapors.

(3) Connect the canister's purge port to the engine.

(4) Plug the canister port that is normally connected to the fuel tank.

§ 1065.410 Maintenance limits for stabilized test engines.

(a) After you stabilize the test engine's emission levels, you may do maintenance as allowed by the standard-setting part. However, you may not do any maintenance based on emission measurements from the test engine (i.e., unscheduled maintenance).

(b) For any critical emission-related maintenance—other than what we specifically allow in the standard-setting part—you must completely test an engine for emissions before and after doing any maintenance that might affect emissions, unless we waive this requirement.

(c) Keep a record of the inspection and update your application to document any changes as a result of the inspection. You may use equipment, instruments, or tools to identify bad engine components. Any equipment, instruments, or tools used for scheduled maintenance on emission data engines must be available to dealerships and other service outlets.

(d) You may adjust or repair an emission-data engine as long as you document these changes in your application.

(e) If we determine that a part failure, system malfunction, or associated repairs have made the engine's emission controls unrepresentative of production engines, you may no longer use it as an emission-data. Also, if your test engine has a major mechanical failure that requires you to take it apart, you may no longer use it as an emission-data engine.

§ 1065.415 Durability demonstration.

If the standard-setting part requires durability testing, you must accumulate service in a way that represents how you expect the engine to operate in use. You may accumulate service hours using an accelerated schedule, such as through continuous operation or by using duty cycles that are more aggressive than in-use operation.

(a) *Maintenance.* The following limits apply to the maintenance that we allow you to do on an emission-data engine:

(1) You may perform scheduled maintenance that you recommend to operators, but only if it is consistent with the standard-setting part's restrictions.

(2) You may perform additional maintenance only as specified in § 1065.410 or allowed by the standard-setting part.

(3) We may approve additional maintenance to your durability engine if all the following occur:

(i) Something clearly malfunctions—such as persistent misfire, engine stall, overheating, fluid leaks, or loss of oil pressure—and needs maintenance or repair.

(ii) You provide us an opportunity to verify the extent of the malfunction before you do the maintenance.

(b) *Emission measurements.* Perform emission tests following the provisions of the standard setting part and this part, as applicable. Perform emission tests to determine deterioration factors consistent with good engineering judgment. Evenly space any tests between the first and last test points throughout the durability period, unless we approve otherwise.

Subpart F—Performing an Emission Test in the Laboratory

§ 1065.501 Overview.

(a) Use the procedures detailed in this subpart to measure engine emissions in a laboratory setting. This section describes how to:

(1) Map your engine by recording specified speed and torque data, as measured from the engine's primary output shaft.

(2) Transform normalized duty cycles into reference duty cycles for your engine by using an engine map.

(3) Prepare your engine, equipment, and measurement instruments for an emission test.

(4) Perform pre-test procedures to verify proper operation of certain equipment and analyzers.

(5) Record pre-test data.

(6) Start or restart the engine and sampling systems.

(7) Sample emissions throughout the duty cycle.

(8) Record post-test data.

(9) Perform post-test procedures to verify proper operation of certain equipment and analyzers.

(10) Weigh PM samples.

(b) A laboratory emission test generally consists of measuring emissions and other parameters while an engine follows one or more duty cycles that are specified in the standard-setting part. There are two general types of duty cycles:

(1) *Transient cycles.* Transient duty cycles are typically specified in the

standard-setting part as a second-by-second sequence of speed commands and torque (or power) commands. Operate an engine over a transient cycle such that the speed and torque of the engine's primary output shaft follows the target values. Proportionally sample emissions and other parameters and use the calculations in subpart G of this part to calculate emissions. Start a transient test according to the standard-setting part, as follows:

(i) A cold-start transient cycle where you start to measure emissions just before starting a cold engine.

(ii) A hot-start transient cycle where you start to measure emissions just before starting a warmed-up engine.

(iii) A hot running transient cycle where you start to measure emissions after an engine is started, warmed up, and running.

(2) *Steady-state cycles.* Steady-state duty cycles are typically specified in the standard-setting part as a list of discrete operating points (modes), where each operating point has one value of a speed command and one value of a torque (or power) command. Ramped-modal cycles for steady-state testing also list test times for each mode and ramps of speed and torque to follow between modes. Start a steady-state cycle as a hot running test, where you start to measure emissions after an engine is started, warmed up and running. You may run a steady-state duty cycle as a discrete-mode cycle or a ramped-modal cycle, as follows:

(i) *Discrete-mode cycles.* Before emission sampling, stabilize an engine at the first discrete mode. Sample emissions and other parameters for that mode and then stop emission sampling. Record mean values for that mode, and then stabilize the engine at the next mode. Continue to sample each mode discretely and calculate weighted emission results according to the standard-setting part.

(ii) *Ramped-modal cycles.* Perform ramped-modal cycles similar to the way you would perform transient cycles, except that ramped-modal cycles involve mostly steady-state engine operation. Perform a ramped-modal cycle as a sequence of second-by-second speed commands and torque (or power) commands. Proportionally sample emissions and other parameters during the cycle and use the calculations in subpart G of this part to calculate emissions.

(c) Other subparts in this part identify how to select and prepare an engine for testing (subpart E), how to perform the required engine service accumulation (subpart E), and how to calculate emission results (subpart G).

(d) Subpart J of this part describes how to perform field testing.

§ 1065.510 Engine mapping.

(a) *Scope and frequency.* An engine map is a data set that consists of a series of paired data points that represent the maximum brake torque versus engine speed, measured at the engine's primary output shaft. Map your engine while it is connected to a dynamometer. Configure any auxiliary work inputs and outputs such as hybrid, turbo-compounding, or thermoelectric systems to represent their in-use configurations, and use the same configuration for emission testing. See Figure 1 of § 1065.210. This may involve configuring initial states of charge and rates and times of auxiliary-work inputs and outputs. We recommend that you contact the Designated Compliance Officer before testing to determine how you should configure any auxiliary-work inputs and outputs. Use the most recent engine map to transform a normalized duty cycle from the standard-setting part to a reference duty cycle specific to your engine. Normalized duty cycles are specified in the standard-setting part. You may update an engine map at any time by repeating the engine-mapping procedure. You must map or re-map an engine before a test if any of the following apply:

(1) If you have not performed an initial engine map.

(2) If the atmospheric pressure near the engine's air inlet is not within ±5 kPa of the atmospheric pressure recorded at the time of the last engine map.

(3) If the engine or emission-control system has undergone changes that might affect maximum torque performance. This includes changing the configuration of auxiliary work inputs and outputs.

(4) If you capture an incomplete map on your first attempt or you do not complete a map within the specified time tolerance. You may repeat mapping as often as necessary to capture a complete map within the specified time.

(b) *Mapping variable-speed engines.* Map variable-speed engines as follows:

(1) Record the atmospheric pressure.

(2) Warm up the engine by operating it. We recommend operating the engine at any speed and at approximately 75% of the its expected maximum power. Continue the warm-up until either the engine coolant, block, or head absolute temperature is within ±2% of its mean value for at least 2 min or until the engine thermostat controls engine temperature.

(3) Operate the engine at its warm idle speed.

(4) Set operator demand to maximum and control engine speed at (95 ±1)% of its warm idle speed for at least 15 seconds. For engines with reference duty cycles whose lowest speed is greater than warm idle speed, you may start the map at (95 ±1)% of the lowest reference speed.

(5) Perform one of the following:

(i) For any engine subject only to steady-state duty cycles (i.e., discrete-mode or ramped-modal), you may perform an engine map by using discrete speeds. Select at least 20 evenly spaced setpoints between warm idle and the highest speed above maximum mapped power at which (50 to 75)% of maximum power occurs. If this highest speed is unsafe or unrepresentative (e.g, for ungoverned engines), use good engineering judgment to map up to the maximum safe speed or the maximum representative speed. At each setpoint, stabilize speed and allow torque to stabilize. Record the mean speed and torque at each setpoint. We recommend that you stabilize an engine for at least 15 seconds at each setpoint and record the mean feedback speed and torque of the last (4 to 6) seconds. Use linear interpolation to determine intermediate speeds and torques. Use this series of speeds and torques to generate the power map as described in paragraph (e) of this section.

(ii) For any variable-speed engine, you may perform an engine map by using a continuous sweep of speed by continuing to record the mean feedback speed and torque at 1 Hz or more frequently and increasing speed at a constant rate such that it takes (4 to 6) min to sweep from 95% of warm idle to the highest speed above maximum power at which (50 to 75)% of maximum power occurs. If this highest speed is unsafe or unrepresentative (e.g, for ungoverned engines), use good engineering judgment to map up to the maximum safe speed or the maximum representative speed. Stop recording after you complete the sweep. From the series of mean speed and maximum torque values, use linear interpolation to determine intermediate values. Use this series of speeds and torques to generate the power map as described in paragraph (e) of this section.

(c) *Negative torque mapping.* If your engine is subject to a reference duty cycle that specifies negative torque values, generate a motoring map by any of the following procedures:

(1) Multiply the positive torques from your map by −40%. Use linear interpolation to determine intermediate values.

(2) Map the amount of negative torque required to motor the engine by repeating paragraph (b) of this section with minimum operator demand.

(3) Determine the amount of negative torque required to motor the engine at the following two points: At warm idle and at the highest speed above maximum power at which (50 to 75)% of maximum power occurs. If this highest speed is unsafe or unrepresentative (e.g, for ungoverned engines), use good engineering judgment to map up to the maximum safe speed or the maximum representative speed. Operate the engine at these two points at minimum operator demand. Use linear interpolation to determine intermediate values.

(d) *Mapping constant-speed engines.* For constant-speed engines, generate a map as follows:

(1) Record the atmospheric pressure.

(2) Warm up the engine by operating it. We recommend operating the engine at approximately 75% of the engine's expected maximum power. Continue the warm-up until either the engine coolant, block, or head absolute temperature is within ±2% of its mean

value for at least 2 min or until the engine thermostat controls engine temperature.

(3) You may operate the engine with a production constant-speed governor or simulate a constant-speed governor by controlling engine speed with an operator demand control system described in § 1065.110. Use either isochronous or speed-droop governor operation, as appropriate.

(4) With the governor or simulated governor controlling speed using operator demand, operate the engine at no-load governed speed (at high speed, not low idle) for at least 15 seconds.

(5) Record at 1 Hz the mean of feedback speed and torque. Use the dynamometer to increase torque at a constant rate. Unless the standard-setting part specifies otherwise, complete the map such that it takes (2 to 4) min to sweep from no-load governed speed to the lowest speed below maximum mapped power at which the engine develops (85–95)% of maximum mapped power. You may map your engine to lower speeds. Stop recording after you complete the sweep. Use this series of speeds and torques to generate the power map as described in paragraph (e) of this section.

(e) *Power mapping.* For all engines, create a power-versus-speed map by transforming torque and speed values to corresponding power values. Use the mean values from the recorded map data. Do not use any interpolated values. Multiply each torque by its corresponding speed and apply the appropriate conversion factors to arrive at units of power (kW).

(f) *Measured and declared test speeds and torques.* You may use test speeds and torques that you declare instead of measured speeds and torques if you declare them before engine mapping and they meet the criteria in this paragraph (f). Otherwise, you must use measured speed and torque.

(1) *Measured speeds and torques.* Determine the applicable measured speeds and torques according to § 1065.610:

(i) Measured maximum test speed for variable-speed engines.

(ii) Measured maximum test torque for constant-speed engines.

(iii) Measured ''A'', ''B'', and ''C'' speeds for steady-state tests.

(iv) Measured intermediate speed for steady-state tests.

(2) *Required declared speeds.* You must declare the following speeds:

(i) Warmed-up, low-idle speed for variable-speed engines. Declare this speed in a way that is representative of in-use operation. For example, if your engine is typically connected to an automatic transmission or a hydrostatic transmission, declare this speed at the idle speed at which your engine operates when the transmission is engaged.

(ii) Warmed-up, no-load, high-idle speed for constant-speed engines.

(3) *Optional declared speeds.* You may declare an enhanced idle speed according to § 1065.610. You may use a declared value for any of the following as long as the declared value is within (97.5 to 102.5)% of its corresponding measured value:

(i) Measured maximum test speed for variable-speed engines.

(ii) Measured intermediate speed for steady-state tests.

(iii) Measured ''A'', ''B'', and ''C'' speeds for steady-state tests.

(4) *Declared torques.* You may declare an enhanced idle torque according to § 1065.610. You may declare maximum test torque as long as it is within (95 to 100)% of the measured value.

(g) *Other mapping procedures.* You may use other mapping procedures if you believe the procedures specified in this section are unsafe or unrepresentative for your engine. Any alternate techniques must satisfy the intent of the specified mapping procedures, which is to determine the maximum available torque at all engine speeds that occur during a duty cycle. Report any deviations from this section's mapping procedures.

§ 1065.512 Duty cycle generation.

(a) The standard-setting part defines applicable duty cycles in a normalized format. A normalized duty cycle consists of a sequence of paired values for speed and torque or for speed and power.

(b) Transform normalized values of speed, torque, and power using the following conventions:

(1) *Engine speed for variable-speed engines.* For variable-speed engines, normalized speed may be expressed as a percentage between idle speed and maximum test speed, f_{ntest}, or speed may be expressed by referring to a defined speed by name, such as warm idle,'' ''intermediate speed,'' or ''A,'' ''B,'' or ''C'' speed. Section 1065.610 describes how to transform these normalized values into a sequence of reference speeds, f_{nref}. Note that the cycle-validation criteria in § 1065.514 allow an engine to govern itself at its in-use idle speed. This allowance permits you to test engines with enhanced-idle devices and to simulate the effects of transmissions such as automatic transmissions.

(2) *Engine torque for variable-speed engines.* For variable-speed engines, normalized torque is expressed as a percentage of the mapped torque at the corresponding reference speed. Section 1065.610 describes how to transform normalized torques into a sequence of reference torques, T_{ref}. Section 1065.610 also describes under what conditions you may command T_{ref} greater than the reference torque you calculated from a normalized duty cycle. This provision permits you to command T_{ref} values representing curb-idle transmission torque (CITT).

(3) *Engine torque for constant-speed engines.* For constant-speed engines, normalized torque is expressed as a percentage of maximum test torque, T_{test}. Section 1065.610 describes how to transform normalized torques into a sequence of reference torques, T_{ref}. Section 1065.610 also describes under what conditions you may command T_{ref} greater than 0 N·m when a normalized duty cycle specifies a 0% torque command.

(4) *Engine power.* For all engines, normalized power is expressed as a percentage of mapped power at maximum test speed, f_{ntest}. Section 1065.610 describes how to transform these normalized values into a sequence of reference powers, P_{ref}. You may convert these reference powers to reference speeds and torques for operator demand and dynamometer control.

(c) For variable-speed engines, command reference speeds and torques sequentially to perform a duty cycle. Issue speed and torque commands at a frequency of at least 5 Hz for transient cycles and at least 1 Hz for steady-state cycles (i.e., discrete-mode and ramped-modal). For transient cycles, linearly interpolate between the 1 Hz reference values specified in the standard-setting part to determine the 5 Hz reference speeds and torques. During an emission test, record the 1 Hz mean values of the reference speeds and torques and the feedback speeds and torques. Use these recorded values to calculate cycle-validation statistics and total work.

(d) For constant-speed engines, operate the engine with the same production governor you used to map the engine in § 1065.525 or simulate the in-use operation of a governor the same way you simulated it to map the engine in § 1065.525. Command reference torque values sequentially to perform a duty cycle. Issue torque commands at a frequency of at least 5 Hz for transient cycles and at least 1 Hz for steady-state cycles (i.e, discrete-mode, ramped-modal). For transient cycles, linearly interpolate between the 1 Hz reference values specified in the standard-setting part to determine the 5 Hz reference torque values. During an emission test, record the 1 Hz mean values of the reference torques and the feedback speeds and torques. Use these recorded values to calculate cycle-validation statistics and total work.

(e) You may perform practice duty cycles with the test engine to optimize operator demand and dynamometer controls to meet the cycle-validation criteria specified in § 1065.514.

§ 1065.514 Cycle-validation criteria.

This section describes how to determine if the engine's operation during the test adequately matched the reference duty cycle. This section applies only to speed, torque, and power from the engine's primary output shaft. Other work inputs and outputs are not subject to cycle-validation criteria. For any data required in this section, use the duty cycle reference and feedback values that you recorded during a test interval.

(a) *Testing performed by EPA.* Our tests must meet the specifications of paragraph (g) of this section, unless we

determine that failing to meet the specifications is related to engine performance rather than to shortcomings of the dynamometer or other laboratory equipment.

(b) *Testing performed by manufacturers.* Emission tests that meet the specifications of paragraph (g) of this section satisfy the standard-setting part's requirements for duty cycles. You may ask to use a dynamometer or other laboratory equipment that cannot meet those specifications. We will approve your request as long as using the alternate equipment does not affect your ability to show compliance with the applicable emission standards.

(c) *Time-alignment.* Because time lag between feedback values and the reference values may bias cycle-validation results, you may advance or delay the entire sequence of feedback engine speed and torque pairs to synchronize them with the reference sequence.

(d) *Calculating work.* Before calculating work values, omit any points recorded during engine cranking and starting. Cranking and starting includes any time when an engine starter is engaged, any time when the engine is motored with a dynamometer for the sole purpose of starting the engine, and any time during operation before reaching idle speed. See § 1065.525(a) and (b) for more information about engine cranking. After omitting points recorded during engine cranking and starting, but before omitting any points under paragraph (e) of this section, calculate total work, W, based on the feedback values and reference work, W_{ref}, based on the reference values, as described in § 1065.650.

(e) *Omitting additional points.* Besides engine cranking, you may omit additional points from cycle-validation statistics as described in the following table:

TABLE 1 OF § 1065.514—PERMISSIBLE CRITERIA FOR OMITTING POINTS FROM DUTY-CYCLE REGRESSION STATISTICS

When operator demand is at its. . .	you may omit. . .	if. . .
For reference duty cycles that are specified in terms of speed and torque (f_{nref}, T_{ref}).		
minimum	power and torque	T_{ref} < 0% (motoring).
minimum	power and speed	f_{nref} = 0% (idle) and T_{ref} = 0% (idle) and $T_{ref} - (2\% \cdot T_{max\ mapped}) < T < T_{ref} + (2\% \cdot T_{max\ mapped})$.
minimum	power and either torque or speed	$f_n > f_{nref}$ or $T > T_{ref}$ but not if $f_n > f_{nref}$ and $T > T_{ref}$.
maximum	power and either torque or speed	$f_n < f_{nref}$ or $T < T_{ref}$ but not if $f_n < f_{nef}$ and $T < T_{ref}$.
For reference duty cycles that are specified in terms of speed and power (f_{nref}, P_{ref}).		
minimum	power and torque	P_{ref} < 0% (motoring).
minimum	power and speed	f_{nref} = 0% (idle) and P_{ref} = 0 % (idle) and $P_{ref} - (2\% \cdot P_{max\ mapped}) < P < P_{ref} + (2\% \cdot P_{max\ mapped})$.
minimum	power and either torque or speed	$f_n > f_{nref}$ or $P > P_{ref}$ but not if $f_n > f_{nref}$ and $P > P_{ref}$.
maximum	power and either torque or speed	$f_n < f_{nref}$ or $P < P_{ref}$ but not if $f_n < f_{nef}$ and $P < P_{ref}$.

(f) *Statistical parameters.* Use the remaining points to calculate regression statistics described in § 1065.602. Round calculated regression statistics to the same number of significant digits as the criteria to which they are compared. Refer to Table 2 of § 1065.514 for the criteria. Calculate the following regression statistics :

(1) Slopes for feedback speed, a_{1fn}, feedback torque, a_{1T}, and feedback power a_{1P}.

(2) Intercepts for feedback speed, a_{0fn}, feedback torque, a_{0T}, and feedback power a_{0P}.

(3) Standard estimates of error for feedback speed, SEE_{fn}, feedback torque, SE_T, and feedback power SEE_P.

(4) Coefficients of determination for feedback speed, r^2_{fn}, feedback torque, r^2_T, and feedback power r^2_P.

(g) *Cycle-validation criteria.* Unless the standard-setting part specifies otherwise, use the following criteria to validate a duty cycle:

(1) For variable-speed engines, apply all the statistical criteria in Table 2 of this section.

(2) For constant-speed engines, apply only the statistical criteria for torque in the Table 2 of this section.

TABLE 2 OF § 1065.514—DEFAULT STATISTICAL CRITERIA FOR VALIDATING DUTY CYCLES

Parameter	Speed	Torque	Power
Slope, a_1	$0.950 \leq a_1 \leq 1.030$	$0.830 \leq a_1 \leq 1.030$	$0.830 \leq a_1 \leq 1.030$.
Absolute value of intercept, $\lvert a_0 \rvert$	≤ 10% of warm idle	≤ 2.0% of maximum mapped torque.	≤ 2.0% of maximum mapped power.
Standard error of estimate, *SEE*.	≤ 5.0% of maximum test speed.	≤ 10% of maximum mapped torque.	≤ 10% of maximum mapped power.
Coefficient of determination, r^2	≥ 0.970	≥ 0.850	≥ 0.910.

§ 1065.520 Pre-test verification procedures and pre-test data collection.

(a) If your engine must comply with a PM standard, follow the procedures for PM sample preconditioning and tare weighing according to § 1065.590.

(b) Unless the standard-setting part specifies different values, verify that ambient conditions are within the following tolerances before the test:

(1) Ambient temperature of (20 to 30) °C.

(2) Atmospheric pressure of (80.000 to 103.325) kPa and within ±5% of the value recorded at the time of the last engine map.

(3) Dilution air as specified in § 1065.140(b).

(c) You may test engines at any intake-air humidity, and we may test engines at any intake-air humidity.

(d) Verify that auxiliary-work inputs and outputs are configured as they were during engine mapping, as described in § 1065.510(a).

(e) You may perform a final calibration of the speed, torque, and proportional-flow control systems, which may include performing practice duty cycles.

(f) You may perform the following recommended procedure to precondition sampling systems:

(1) Start the engine and use good engineering judgment to bring it to 100% torque at any speed above its peak-torque speed.

(2) Operate any dilution systems at their expected flow rates. Prevent aqueous condensation in the dilution systems.

(3) Operate any PM sampling systems at their expected flow rates.

(4) Sample PM for at least 10 min using any sample media. You may change sample media during preconditioning. You may discard preconditioning samples without weighing them.

(5) You may purge any gaseous sampling systems during preconditioning.

(6) You may conduct calibrations or verifications on any idle equipment or analyzers during preconditioning.

(7) Proceed with the test sequence described in § 1065.530(a)(1).

(g) After the last practice or preconditioning cycle before an emission test, verify the amount of contamination in the HC sampling system as follows:

(1) Select the HC analyzer range for measuring the flow-weighted mean concentration expected at the HC standard.

(2) Zero the HC analyzer at the analyzer zero or sample port. Note that FID zero and span balance gases may be any combination of purified air or purified nitrogen that meets the specifications of § 1065.750. We recommend FID analyzer zero and span gases that contain approximately the flow-weighted mean concentration of O_2 expected during testing.

(3) Span the HC analyzer using span gas introduced at the analyzer span or sample port. Span on a carbon number basis of one (C_1). For example, if you use a C_3H_8 span gas of concentration 200 µmol/mol, span the FID to respond with a value of 600 µmol/mol.

(4) Overflow zero gas at the HC probe or into a fitting between the HC probe and its transfer line.

(5) Measure the HC concentration in the sampling system, as follows:

(i) For continuous sampling, record the mean HC concentration as overflow zero air flows.

(ii) For batch sampling, fill the sample medium and record its mean HC concentration.

(6) Record this value as the initial HC concentration, x_{HCinit}, and use it to correct measured values as described in § 1065.660.

(7) If x_{HCinit} exceeds the greatest of the following values, determine the source of the contamination and take corrective action, such as purging the system during an additional preconditioning cycle or replacing contaminated portions:

(i) 2% of the flow-weighted mean concentration expected at the standard.

(ii) 2% of the flow-weighted mean concentration measured during testing.

(iii) For any compression-ignition engines, any two-stroke spark ignition engines, or 4-stroke spark-ignition engines that are less than 19 kW, 2 μmol/mol.

(8) If corrective action does not resolve the deficiency, you may request to use the contaminated system as an alternate procedure under § 1065.10.

§ 1065.525 Engine starting, restarting, and shutdown.

(a) Start the engine using one of the following methods:

(1) Start the engine as recommended in the owners manual using a production starter motor and adequately charged battery or a suitable power supply.

(2) Use the dynamometer to start the engine. To do this, motor the engine within ±25% of its typical in-use cranking speed. Stop cranking within 1 second of starting the engine.

(b) If the engine does not start after 15 seconds of cranking, stop cranking and determine why the engine failed to start, unless the owners manual or the service-repair manual describes the longer cranking time as normal.

(c) Respond to engine stalling with the following steps:

(1) If the engine stalls during warm-up before emission sampling begins, restart the engine and continue warm-up.

(2) If the engine stalls during preconditioning before emission sampling begins, restart the engine and restart the preconditioning sequence.

(3) If the engine stalls at any time after emission sampling begins for a transient test or ramped-modal cycle test, the test is void.

(4) If the engine stalls at any time after emission sampling begins for a discrete mode in a discrete-mode duty cycle test, void the test or perform the following steps to continue the test:

(i) Restart the engine.

(ii) Use good engineering judgment to restart the test sequence using the appropriate steps in § 1065.530(b)

(iii) Precondition the engine at the previous discrete mode for a similar amount of time compared with how long it was initially run.

(iv) Advance to the mode at which the engine stalled and continue with the duty cycle as specified in the standard-setting part.

(v) Complete the remainder of the test according to the requirements in this subpart.

(d) Shut down the engine according to the manufacturer's specifications.

§ 1065.530 Emission test sequence.

(a) Time the start of testing as follows:

(1) Perform one of the following if you precondition sampling systems as described in § 1065.520(f):

(i) For cold-start duty cycles, shut down the engine. Unless the standard-setting part specifies that you may only perform a natural engine cooldown, you may perform a forced engine cooldown. Use good engineering judgment to set up systems to send cooling air across the engine, to send cool oil through the engine lubrication system, to remove heat from coolant through the engine cooling system, and to remove heat from an exhaust aftertreatment system. In the case of a forced aftertreatment cooldown, good engineering judgment would indicate that you not start flowing cooling air until the aftertreatment system has cooled below its catalytic activation temperature. For platinum-group metal catalysts, this temperature is about 200 °C. Once the aftertreatment system has naturally cooled below its catalytic activation temperature, good engineering judgment would indicate that you use clean air with a temperature of at least 15 °C, and direct the air through the aftertreatment system in the normal direction of exhaust flow.

Do not use any cooling procedure that results in unrepresentative emissions (see §1065.10(c)(1)). You may start a cold-start duty cycle when the temperatures of an engine's lubricant, coolant, and aftertreatment systems are all between (20 and 30) °C.

(ii) For hot-start emission measurements, shut down the engine. Start a hot-start duty cycle within 20 min of engine shutdown.

(iii) For testing that involves hot-stabilized emission measurements, such as any steady-state testing, you may continue to operate the engine at f_{ntest} and 100% torque if that is the first operating point. Otherwise, operate the engine at warm, idle or the first operating point of the duty cycle. In any case, start the emission test within 10 min after you complete the preconditioning procedure.

(2) For all other testing, perform one of the following:

(i) For cold-start duty cycles, prepare the engine according to paragraph (a)(1)(i) of this section.

(ii) For hot-start emission measurements, first operate the engine at any speed above peak-torque speed and at (65 to 85) % of maximum mapped power until either the engine coolant, block, or head absolute temperature is within ±2% of its mean value for at least 2 min or until the engine thermostat controls engine temperature. Shut down the engine. Start the duty cycle within 20 min of engine shutdown.

(iii) For testing that involves hot-stabilized emission measurements, bring the engine either to warm idle or the first operating point of the duty cycle. Start the test within 10 min of achieving temperature stability. Determine temperature stability either as the point at which the engine coolant, block, or head absolute temperature is within ±2% of its mean value for at least 2 min, or as the point at which the engine thermostat controls engine temperature.

(b) Take the following steps before emission sampling begins:

(1) For batch sampling, connect clean storage media, such as evacuated bags or tare-weighed filters.

(2) Start all measurement instruments according to the instrument manufacturer's instructions and using good engineering judgment.

(3) Start dilution systems, sample pumps, cooling fans, and the data-collection system.

(4) Pre-heat or pre-cool heat exchangers in the sampling system to within their operating temperature tolerances for a test.

(5) Allow heated or cooled components such as sample lines, filters, chillers, and pumps to stabilize at their operating temperatures.

(6) Verify that there are no significant vacuum-side leaks according to §1065.345.

(7) Adjust the sample flow rates to desired levels, using bypass flow, if desired.

(8) Zero or re-zero any electronic integrating devices, before the start of any test interval.

(9) Select gas analyzer ranges. You may use analyzers that automatically switch ranges during a test only if switching is performed by changing the span over which the digital resolution of the instrument is applied. During a test you may not switch the gains of an analyzer's analog operational amplifier(s).

(10) Zero and span all continuous analyzers using NIST-traceable gases that meet the specifications of §1065.750. Span FID analyzers on a carbon number basis of one (1), C_1. For example, if you use a C_3H_8 span gas of concentration 200 μmol/mol, span the FID to respond with a value of 600 μmol/mol.

(11) We recommend that you verify gas analyzer response after zeroing and spanning by flowing a calibration gas that has a concentration near one-half of the span gas concentration. Based on the results and good engineering judgment, you may decide whether or not to re-zero, re-span, or re-calibrate a gas analyzer before starting a test.

(12) If you correct for dilution air background concentrations of engine exhaust constituents, start measuring and recording background concentrations.

(c) Start testing as follows:

(1) If an engine is already running and warmed up, and starting is not part of the duty cycle, perform the following for the various duty cycles.

(i) *Transient and steady-state ramped-modal cycles.* Simultaneously start running the duty cycle, sampling exhaust gases, recording data, and integrating measured values.

(ii) *Steady-state discrete-mode cycles.* Control speed and torque to the first mode in the test cycle. Follow the instructions in the standard-setting part to determine how long to stabilize engine operation at each mode and how long to sample emissions at each mode.

(2) If engine starting is part of the duty cycle, initiate data logging, sampling of exhaust gases, and integrating measured values before attempting to start the engine. Initiate the duty cycle when the engine starts.

(d) At the end of the test interval, continue to operate all sampling and dilution systems to allow the sampling system's response time to elapse. Then stop all sampling and recording, including the recording of background samples. Finally, stop any integrating devices and indicate the end of the duty cycle in the recorded data.

(e) Shut down the engine if you have completed testing or if it is part of the duty cycle.

(f) If testing involves another duty cycle after a soak period with the engine off, start a timer when the engine shuts down, and repeat the steps in paragraphs (b) through (e) of this section as needed.

(g) Take the following steps after emission sampling is complete:

(1) For any proportional batch sample, such as a bag sample or PM sample, verify that proportional sampling was maintained according to § 1065.545. Void any samples that did not maintain proportional sampling according to § 1065.545.

(2) Place any used PM samples into covered or sealed containers and return them to the PM-stabilization environment. Follow the PM sample post-conditioning and total weighing procedures in § 1065.595.

(3) As soon as practical after the duty cycle is complete but no later than 30 minutes after the duty cycle is complete, perform the following:

(i) Zero and span all batch gas analyzers.

(ii) Analyze any gaseous batch samples, including background samples.

(4) After quantifying exhaust gases, verify drift as follows:

(i) For batch and continuous gas analyzers, record the mean analyzer value after stabilizing a zero gas to the analyzer. Stabilization may include time to purge the analyzer of any sample gas, plus any additional time to account for analyzer response.

(ii) Record the mean analyzer value after stabilizing the span gas to the analyzer. Stabilization may include time to purge the analyzer of any sample gas, plus any additional time to account for analyzer response.

(iii) Use these data to validate and correct for drift as described in § 1065.550.

(h) Determine whether or not the test meets the cycle-validation criteria in § 1065.514.

(1) If the criteria void the test, you may retest using the same denormalized duty cycle, or you may re-map the engine, denormalize the reference duty cycle based on the new map and retest the engine using the new denormalized duty cycle.

(2) If the criteria void the test for a constant-speed engine only during commands of maximum test torque, you may do the following:

(i) Determine the first and last feedback speeds at which maximum test torque was commanded.

(ii) If the last speed is greater than or equal to 90% of the first speed, the test is void. You may retest using the same denormalized duty cycle, or you may re-map the engine, denormalize the reference duty cycle based on the new map and retest the engine using the new denormalized duty cycle.

(iii) If the last speed is less than 90% of the first speed, reduce maximum test torque by 5%, and proceed as follows:

(A) Denormalize the entire duty cycle based on the reduced maximum test torque according to § 1065.512.

(B) Retest the engine using the denormalized test cycle that is based on the reduced maximum test torque.

(C) If your engine still fails the cycle criteria, reduce the maximum test torque by another 5% of the original maximum test torque.

(D) If your engine fails after repeating this procedure four times, such

that your engine still fails after you have reduced the maximum test torque by 20% of the original maximum test torque, notify us and we will consider specifying a more appropriate duty cycle for your engine under the provisions of § 1065.10(c).

§ 1065.545 Validation of proportional flow control for batch sampling.

For any proportional batch sample such as a bag or PM filter, demonstrate that proportional sampling was maintained using one of the following, noting that you may omit up to 5% of the total number of data points as outliers:

(a) For any pair of flow meters, use the 1 Hz (or more frequently) recorded sample and total flow rates with the statistical calculations in § 1065.602. Determine the standard error of the estimate, *SEE*, of the sample flow rate versus the total flow rate. For each test interval, demonstrate that *SEE* was less than or equal to 3.5% of the mean sample flow rate.

(b) For any pair of flow meters, use the 1 Hz (or more frequently) recorded sample and total flow rates to demonstrate that each flow rate was constant within ±2.5% of its respective mean or target flow rate. You may use the following options instead of recording the respective flow rate of each type of meter:

(1) *Critical-flow venturi option.* For critical-flow venturis, you may use the 1 Hz (or more frequently) recorded venturi-inlet conditions. Demonstrate that the flow density at the venturi inlet was constant within ±2.5% of the mean or target density over each test interval. For a CVS critical-flow venturi, you may demonstrate this by showing that the absolute temperature at the venturi inlet was constant within ±4% of the mean or target absolute temperature over each test interval.

(2) *Positive-displacement pump option.* You may use the 1 Hz (or more frequently) recorded pump-inlet conditions. Demonstrate that the density at the pump inlet was constant within ±2.5% of the mean or target density over each test interval. For a CVS pump, you may demonstrate this by showing that the absolute temperature at the pump inlet was constant within ±2% of the mean or target absolute temperature over each test interval.

(c) Using good engineering judgment, demonstrate with an engineering analysis that the proportional-flow control system inherently ensures proportional sampling under all circumstances expected during testing. For example, you might use CFVs for both sample flow and total flow and demonstrate that they always have the same inlet pressures and temperatures and that they always operate under critical-flow conditions.

§ 1065.550 Gas analyzer range validation, drift validation, and drift correction.

(a) *Range validation.* If an analyzer operated above 100% of its range at any time during the test, perform the following steps:

(1) For batch sampling, re-analyze the sample using the lowest analyzer range that results in a maximum instrument response below 100%. Report the result from the lowest range from which the analyzer operates below 100% of its range for the entire test.

(2) For continuous sampling, repeat the entire test using the next higher analyzer range. If the analyzer again operates above 100% of its range, repeat the test using the next higher range. Continue to repeat the test until the analyzer operates at less than 100% of its range for the entire test.

(b) *Drift validation and drift correction.* Calculate two sets of brake-specific emission results. Calculate one set using the data before drift correction and the other set after correcting all the data for drift according to § 1065.672. Use the two sets of brake-specific emission results as follows:

(1) If the difference between the corrected and uncorrected brake-specific emissions are within ±4% of the uncorrected results for all regulated emissions, the test is validated for drift. If not, the entire test is void.

(2) If the test is validated for drift, you must use only the drift-corrected emission results when reporting emissions, unless you demonstrate to us that using the drift-corrected results adversely affects your ability to demonstrate whether or not your engine complies with the applicable standards.

§ 1065.590 PM sample preconditioning and tare weighing.

Before an emission test, take the following steps to prepare PM samples and equipment for PM measurements:

(a) Make sure the balance and PM-stabilization environments meet the periodic verifications in § 1065.390.

(b) Visually inspect unused sample media (such as filters) for defects.

(c) To handle PM samples, use electrically grounded tweezers or a grounding strap, as described in § 1065.190.

(d) Place unused sample media in one or more containers that are open to the PM-stabilization environment. If you are using filters, you may place them in the bottom half of a filter cassette.

(e) Stabilize sample media in the PM-stabilization environment. Consider an unused sample medium stabilized as long as it has been in the PM-stabilization environment for a minimum of 30 min, during which the PM-stabilization environment has been within the specifications of § 1065.190.

(f) Weigh the sample media automatically or manually, as follows:

(1) For automatic weighing, follow the automation system manufacturer's instructions to prepare samples for weighing. This may include placing the samples in a special container.

(2) For manual weighing, use good engineering judgment to determine if substitution weighing is necessary to show that an engine meets the applicable standard. You may follow the substitution weighing procedure in paragraph (j) of this section, or you may develop your own procedure.

(g) Correct the measured weight for buoyancy as described in § 1065.690. These buoyancy-corrected values are the tare masses of the PM samples.

(h) You may repeat measurements to determine mean masses. Use good engineering judgment to exclude outliers and calculate mean mass values.

(i) If you use filters as sample media, load unused filters that have been tare-weighed into clean filter cassettes and place the loaded cassettes in a covered or sealed container before taking them to the test cell for sampling. We recommend that you keep filter cassettes clean by periodically washing or wiping them with a compatible solvent applied using a lint-free cloth. Depending upon your cassette material, ethanol (C_2H_5OH) might be an acceptable solvent. Your cleaning frequency will depend on your engine's level of PM and HC emissions.

(j) Substitution weighing involves measurement of a reference weight before and after each weighing of a PM sample. While substitution weighing requires more measurements, it corrects for a balance's zero-drift and it relies on balance linearity only over a small range. This is most advantageous when quantifying net PM masses that are less than 0.1% of the sample medium's mass. However, it may not be advantageous when net PM masses exceed 1% of the sample medium's mass. The following steps are an example of substitution weighing:

(1) Use electrically grounded tweezers or a grounding strap, as described in § 1065.190.

(2) Use a static neutralizer as described in § 1065.190 to minimize static electric charge on any object before it is placed on the balance pan.

(3) Place on the balance pan a metal calibration weight that has a similar mass to that of the sample medium and meets the specifications for calibration weights in § 1065.790. If you use filters, the weight's mass should be about (80 to 100) mg for typical 47 mm diameter filters.

(4) Record the stable balance reading, then remove the calibration weight.

(5) Weigh an unused sample, record the stable balance reading and record the balance environment's dewpoint, ambient temperature, and atmospheric pressure.

(6) Reweigh the calibration weight and record the stable balance reading.

(7) Calculate the arithmetic mean of the two calibration-weight readings that you recorded immediately before and after weighing the unused sample. Subtract that mean value from the unused sample reading, then add the true mass of the calibration weight as stated on the calibration-weight certificate. Record this result. This is the unused sample's tare weight without correcting for buoyancy.

(8) Repeat these substitution-weighing steps for the remainder of your unused sample media.

(9) Follow the instructions given in paragraphs (g) through (i) of this section.

§ 1065.595 PM sample post-conditioning and total weighing.

(a) Make sure the weighing and PM-stabilization environments have met the periodic verifications in § 1065.390.

(b) In the PM-stabilization environment, remove PM samples from sealed containers. If you use filters, you may remove them from their cassettes before or after stabilization. When you remove a filter from a cassette, separate the top half of the cassette from the bottom half using a cassette separator designed for this purpose.

(c) To handle PM samples, use electrically grounded tweezers or a grounding strap, as described in § 1065.190.

(d) Visually inspect PM samples. If PM ever contacts the transport container, cassette assembly, filter-separator tool, tweezers, static neutralizer, balance, or any other surface, void the measurements associated with that sample and clean the surface it contacted.

(e) To stabilize PM samples, place them in one or more containers that are open to the PM-stabilization environment, which is described in § 1065.190. A PM sample is stabilized as long as it has been in the PM-stabilization environment for one of the following durations, during which the stabilization environment has been within the specifications of § 1065.190:

(1) If you expect that a filter's total surface concentration of PM will be greater than about 0.473 mm/mm^2, expose the filter to the stabilization environment for at least 60 minutes before weighing.

(2) If you expect that a filter's total surface concentration of PM will be less than about 0.473 mm/mm^2, expose the filter to the stabilization environment for at least 30 minutes before weighing.

(3) If you are unsure of a filter's total surface concentration of PM, expose the filter to the stabilization environment for at least 60 minutes before weighing.

(f) Repeat the procedures in § 1065.590(f) through (i) to weigh used PM samples. Refer to a sample's post-test mass, after correcting for buoyancy, as its total mass.

(g) Subtract each buoyancy-corrected tare mass from its respective buoyancy-corrected total mass. The result is the net PM mass, m_{PM}. Use m_{PM} in emission calculations in § 1065.650.

Subpart G—Calculations and Data Requirements

§ 1065.601 Overview.

(a) This subpart describes how to—

(1) Use the signals recorded before, during, and after an emission test to calculate brake-specific emissions of each regulated constituent.

(2) Perform calculations for calibrations and performance checks.

(3) Determine statistical values.

(b) You may use data from multiple systems to calculate test results for a single emission test, consistent with good engineering judgment. You may not use test results from multiple emission tests to report emissions. We allow weighted means where appropriate. You may discard statistical outliers, but you must report all results.

(c) You may use any of the following calculations instead of the calculations specified in this subpart G:

(1) Mass-based emission calculations prescribed by the International Organization for Standardization (ISO), according to ISO 8178.

(2) Other calculations that you show are equivalent to within ±0.1% of the brake-specific emission results determined using the calculations specified in this subpart G.

§ 1065.602 Statistics.

(a) *Overview.* This section contains equations and example calculations for statistics that are specified in this part. In this section we use the letter "y" to denote a generic measured quantity, the superscript over-bar "–" to denote an arithmetic mean, and the subscript "$_{ref}$" to denote the reference quantity being measured.

(b) *Arithmetic mean.* Calculate an arithmetic mean, $\bar{y}$, as follows:

$$\bar{y} = \frac{\sum_{i=1}^{10} y_i}{N} \qquad \text{Eq. 1065.602-1}$$

Example:

$N = 3$
$y_1 = 10.60$
$y_2 = 11.91$
$y_N = y_3 = 11.09$

$$\bar{y} = \frac{10.60 + 11.91 + 11.09}{3}$$

$\bar{y} = 11.20$

(c) *Standard deviation*. Calculate the standard deviation for a non-biased (e.g., N–1) sample, σ, as follows:

$$\sigma_y = \sqrt{\frac{\sum_{i=1}^{N} (y_i - \bar{y})^2}{(N-1)}} \qquad \text{Eq. 1065.602-2}$$

Example:

$N = 3$
$y_1 = 10.60$
$y_2 = 11.91$
$y_N = y_3 = 11.09$
$\bar{y} = 11.20$

$$\sigma_y = \sqrt{\frac{(10.60 - 11.2)^2 + (11.91 - 11.2)^2 + (11.09 - 11.2)^2}{2}}$$

$\sigma_y = 0.6619$

(d) *Root mean square*. Calculate a root mean square, rms_y, as follows:

$$rms_y = \sqrt{\frac{1}{N} \sum_{i=1}^{N} y_i^2} \qquad \text{Eq. 1065.602-3}$$

Example:

$N = 3$
$y_1 = 10.60$
$y_2 = 11.91$
$y_N = y_3 = 11.09$

$$rms_y = \sqrt{\frac{10.60 + 11.91^2 + 11.09^2}{3}}$$

$rms_y = 11.21$

(e) *Accuracy*. Calculate an accuracy, as follows, noting that the $\bar{y}_i$ are arithmetic means, each determined by repeatedly measuring one sample of a single reference quantity, y_{ref}:

$$accuracy = |y_{ref} - \bar{y}| \qquad \text{Eq. 1065.602-4}$$

Example:

$y_{ref} = 1800.0$
$N = 10$

$$\bar{y} = \frac{\sum_{i=1}^{10} \bar{y}_i}{10} = 1802.5$$

$accuracy = |1800.0 - 1802.5|$
$accuracy = 2.5$

(f) *t-test*. Determine if your data passes a *t*-test by using the following equations and tables:

(1) For an unpaired *t*-test, calculate the *t* statistic and its number of degrees of freedom, ν, as follows:

$$t = \frac{|\bar{y}_{ref} - \bar{y}|}{\sqrt{\frac{\sigma_{ref}^2}{N_{ref}} + \frac{\sigma_y^2}{N}}} \qquad \text{Eq. 1065.602-5}$$

$$v = \frac{\left(\frac{\sigma_{ref}^2}{N_{ref}} + \frac{\sigma_y^2}{N}\right)^2}{\frac{\left(\sigma_{ref}^2 / N_{ref}\right)^2}{N_{ref} - 1} + \frac{\left(\sigma_y^2 / N\right)^2}{N - 1}} \qquad \text{Eq. 1065.602-6}$$

Example:

$\bar{y}_{ref}$ = 1205.3
$\bar{y}$ = 1123.8
σ_{ref} = 9.399
σ_y = 10.583
N_{ref} = 11
N= 7

$$t = \frac{|1205.3 - 1123.8|}{\sqrt{\frac{9.399^2}{11} + \frac{10.583^2}{7}}}$$

t = 16.63
σ_{ref} = 9.399
σ_y = 10.583
N_{ref} = 11
N = 7

$$t = \frac{|1205.3 - 1123.8|}{\sqrt{\frac{9.399^2}{11} + \frac{10.583^2}{7}}}$$

ν = 11.76

(2) For a paired t-test, calculate the t statistic and its number of degrees of freedom, ν, as follows, noting that the ε_i are the errors (e.g., differences) between each pair of y_{refi} and y_i:

$$t = \frac{|\bar{\varepsilon}| \cdot \sqrt{N}}{\sigma_\varepsilon} \qquad \text{Eq. 1065.602-7}$$

Example:

$\bar{\varepsilon}$ = −0.12580
N = 16
$\sigma\varepsilon$ = 0.04837

$$t = \frac{|-0.12580| \cdot \sqrt{16}}{0.04837}$$

t = 10.403
$\nu = N - 1$

Example:

N = 16
ν = 16 − 1
ν = 15

(3) Use Table 1 of this section to compare t to the t_{crit} values tabulated versus the number of degrees of freedom. If t is less than t_{crit}, then t passes the t-test.

TABLE 1 OF § 1065.602—CRITICAL *t* VALUES VERSUS NUMBER OF DEGREES OF FREEDOM, ν [1]

ν	Confidence	
	90%	95%
1	6.314	12.706
2	2.920	4.303
3	2.353	3.182
4	2.132	2.776
5	2.015	2.571
6	1.943	2.447
7	1.895	2.365
8	1.860	2.306
9	1.833	2.262
10	1.812	2.228
11	1.796	2.201
12	1.782	2.179
13	1.771	2.160
14	1.761	2.145
15	1.753	2.131
16	1.746	2.120
18	1.734	2.101
20	1.725	2.086
22	1.717	2.074
24	1.711	2.064
26	1.706	2.056
28	1.701	2.048
30	1.697	2.042
35	1.690	2.030
40	1.684	2.021
50	1.676	2.009
70	1.667	1.994
100	1.660	1.984
1000+	1.645	1.960

[1] Use linear interpolation to establish values not shown here.

(g) *F-test*. Calculate the F statistic as follows:

$$F_y = \frac{\sigma_y^2}{\sigma_{ref}^2} \qquad \text{Eq. 1065.602-8}$$

Example:

$$\sigma_y = \sqrt{\frac{\sum_{i=1}^{N}\left(y_i - \bar{y}\right)^2}{\left(N-1\right)}} = 10.583$$

$$\sigma_{ref} = \sqrt{\frac{\sum_{i=1}^{N_{ref}}\left(y_{refi} - \bar{y}_{ref}\right)^2}{\left(N_{ref}-1\right)}} = 9.399$$

$$F = \frac{10.583^2}{9.399^2}$$

$F = 1.268$

(1) For a 90% confidence F-test, use Table 2 of this section to compare F to the F_{crit90} values tabulated versus $(N-1)$ and $(N_{ref}-1)$. If F is less than F_{crit90}, then F passes the F-test at 90% confidence.

(2) For a 95% confidence F-test, use Table 3 of this section to compare F to the F_{crit95} values tabulated versus $(N-1)$ and $(N_{ref}-1)$. If F is less than F_{crit95}, then F passes the F-test at 95% confidence.

Table 2 of §1065.602–Critical F values, F_{crit90}, versus N-1 and N_{ref}-1 at 90 % confidence

N-1	1	2	3	4	5	6	7	8	9	10	12	15	20	24	30	40	60	120	1000+
N_{ref}-1																			
1	39.86	49.50	53.59	55.83	57.24	58.20	58.90	59.43	59.85	60.19	60.70	61.22	61.74	62.00	62.26	62.52	62.79	63.06	63.32
2	8.526	9.000	9.162	9.243	9.293	9.326	9.349	9.367	9.381	9.392	9.408	9.425	9.441	9.450	9.458	9.466	9.475	9.483	9.491
3	5.538	5.462	5.391	5.343	5.309	5.285	5.266	5.252	5.240	5.230	5.216	5.200	5.184	5.176	5.168	5.160	5.151	5.143	5.134
4	4.545	4.325	4.191	4.107	4.051	4.010	3.979	3.955	3.936	3.920	3.896	3.870	3.844	3.831	3.817	3.804	3.790	3.775	3.761
5	4.060	3.780	3.619	3.520	3.453	3.405	3.368	3.339	3.316	3.297	3.268	3.238	3.207	3.191	3.174	3.157	3.140	3.123	3.105
6	3.776	3.463	3.289	3.181	3.108	3.055	3.014	2.983	2.958	2.937	2.905	2.871	2.836	2.818	2.800	2.781	2.762	2.742	2.722
7	3.589	3.257	3.074	2.961	2.883	2.827	2.785	2.752	2.725	2.703	2.668	2.632	2.595	2.575	2.555	2.535	2.514	2.493	2.471
8	3.458	3.113	2.924	2.806	2.726	2.668	2.624	2.589	2.561	2.538	2.502	2.464	2.425	2.404	2.383	2.361	2.339	2.316	2.293
9	3.360	3.006	2.813	2.693	2.611	2.551	2.505	2.469	2.440	2.416	2.379	2.340	2.298	2.277	2.255	2.232	2.208	2.184	2.159
10	3.285	2.924	2.728	2.605	2.522	2.461	2.414	2.377	2.347	2.323	2.284	2.244	2.201	2.178	2.155	2.132	2.107	2.082	2.055
11	3.225	2.860	2.660	2.536	2.451	2.389	2.342	2.304	2.274	2.248	2.209	2.167	2.123	2.100	2.076	2.052	2.026	2.000	1.972
12	3.177	2.807	2.606	2.480	2.394	2.331	2.283	2.245	2.214	2.188	2.147	2.105	2.060	2.036	2.011	1.986	1.960	1.932	1.904
13	3.136	2.763	2.560	2.434	2.347	2.283	2.234	2.195	2.164	2.138	2.097	2.053	2.007	1.983	1.958	1.931	1.904	1.876	1.846
14	3.102	2.726	2.522	2.395	2.307	2.243	2.193	2.154	2.122	2.095	2.054	2.010	1.962	1.938	1.912	1.885	1.857	1.828	1.797
15	3.073	2.695	2.490	2.361	2.273	2.208	2.158	2.119	2.086	2.059	2.017	1.972	1.924	1.899	1.873	1.845	1.817	1.787	1.755
16	3.048	2.668	2.462	2.333	2.244	2.178	2.128	2.088	2.055	2.028	1.985	1.940	1.891	1.866	1.839	1.811	1.782	1.751	1.718
17	3.026	2.645	2.437	2.308	2.218	2.152	2.102	2.061	2.028	2.001	1.958	1.912	1.862	1.836	1.809	1.781	1.751	1.719	1.686
18	3.007	2.624	2.416	2.286	2.196	2.130	2.079	2.038	2.005	1.977	1.933	1.887	1.837	1.810	1.783	1.754	1.723	1.691	1.657
19	2.990	2.606	2.397	2.266	2.176	2.109	2.058	2.017	1.984	1.956	1.912	1.865	1.814	1.787	1.759	1.730	1.699	1.666	1.631
20	2.975	2.589	2.380	2.249	2.158	2.091	2.040	1.999	1.965	1.937	1.892	1.845	1.794	1.767	1.738	1.708	1.677	1.643	1.607
21	2.961	2.575	2.365	2.233	2.142	2.075	2.023	1.982	1.948	1.920	1.875	1.827	1.776	1.748	1.719	1.689	1.657	1.623	1.586
20	2.949	2.561	2.351	2.219	2.128	2.061	2.008	1.967	1.933	1.904	1.859	1.811	1.759	1.731	1.702	1.671	1.639	1.604	1.567
23	2.937	2.549	2.339	2.207	2.115	2.047	1.995	1.953	1.919	1.890	1.845	1.796	1.744	1.716	1.686	1.655	1.622	1.587	1.549
24	2.927	2.538	2.327	2.195	2.103	2.035	1.983	1.941	1.906	1.877	1.832	1.783	1.730	1.702	1.672	1.641	1.607	1.571	1.533
25	2.918	2.528	2.317	2.184	2.092	2.024	1.971	1.929	1.895	1.866	1.820	1.771	1.718	1.689	1.659	1.627	1.593	1.557	1.518
26	2.909	2.519	2.307	2.174	2.082	2.014	1.961	1.919	1.884	1.855	1.809	1.760	1.706	1.677	1.647	1.615	1.581	1.544	1.504
27	2.901	2.511	2.299	2.165	2.073	2.005	1.952	1.909	1.874	1.845	1.799	1.749	1.695	1.666	1.636	1.603	1.569	1.531	1.491
28	2.894	2.503	2.291	2.157	2.064	1.996	1.943	1.900	1.865	1.836	1.790	1.740	1.685	1.656	1.625	1.593	1.558	1.520	1.478
29	2.887	2.495	2.283	2.149	2.057	1.988	1.935	1.892	1.857	1.827	1.781	1.731	1.676	1.647	1.616	1.583	1.547	1.509	1.467
30	2.881	2.489	2.276	2.142	2.049	1.980	1.927	1.884	1.849	1.819	1.773	1.722	1.667	1.638	1.606	1.573	1.538	1.499	1.456
40	2.835	2.440	2.226	2.091	1.997	1.927	1.873	1.829	1.793	1.763	1.715	1.662	1.605	1.574	1.541	1.506	1.467	1.425	1.377
60	2.791	2.393	2.177	2.041	1.946	1.875	1.819	1.775	1.738	1.707	1.657	1.603	1.543	1.511	1.476	1.437	1.395	1.348	1.291
120	2.748	2.347	2.130	1.992	1.896	1.824	1.767	1.722	1.684	1.652	1.601	1.545	1.482	1.447	1.409	1.368	1.320	1.265	1.193
1000+	2.706	2.303	2.084	1.945	1.847	1.774	1.717	1.670	1.632	1.599	1.546	1.487	1.421	1.383	1.342	1.295	1.240	1.169	1.000

Table 3 of §1065.602–Critical F values, F_{crit95}, versus N-1 and N_{ref}-1 at 95 % confidence

N-1	1	2	3	4	5	6	7	8	9	10	12	15	20	24	30	40	60	120	1000+
N_{ref}-1																			
1	161.4	199.5	215.7	224.5	230.1	233.9	236.7	238.8	240.5	241.8	243.9	245.9	248.0	249.0	250.1	251.1	252.2	253.2	254.3
2	18.51	19.00	19.16	19.24	19.29	19.33	19.35	19.37	19.38	19.39	19.41	19.42	19.44	19.45	19.46	19.47	19.47	19.48	19.49
3	10.12	9.552	9.277	9.117	9.014	8.941	8.887	8.845	8.812	8.786	8.745	8.703	8.660	8.639	8.617	8.594	8.572	8.549	8.526
4	7.709	6.944	6.591	6.388	6.256	6.163	6.094	6.041	5.999	5.964	5.912	5.858	5.803	5.774	5.746	5.717	5.688	5.658	5.628
5	6.608	5.786	5.410	5.192	5.050	4.950	4.876	4.818	4.773	4.735	4.678	4.619	4.558	4.527	4.496	4.464	4.431	4.399	4.365
6	5.987	5.143	4.757	4.534	4.387	4.284	4.207	4.147	4.099	4.060	4.000	3.938	3.874	3.842	3.808	3.774	3.740	3.705	3.669
7	5.591	4.737	4.347	4.120	3.972	3.866	3.787	3.726	3.677	3.637	3.575	3.511	3.445	3.411	3.376	3.340	3.304	3.267	3.230
8	5.318	4.459	4.066	3.838	3.688	3.581	3.501	3.438	3.388	3.347	3.284	3.218	3.150	3.115	3.079	3.043	3.005	2.967	2.928
9	5.117	4.257	3.863	3.633	3.482	3.374	3.293	3.230	3.179	3.137	3.073	3.006	2.937	2.901	2.864	2.826	2.787	2.748	2.707
10	4.965	4.103	3.708	3.478	3.326	3.217	3.136	3.072	3.020	2.978	2.913	2.845	2.774	2.737	2.700	2.661	2.621	2.580	2.538
11	4.844	3.982	3.587	3.357	3.204	3.095	3.012	2.948	2.896	2.854	2.788	2.719	2.646	2.609	2.571	2.531	2.490	2.448	2.405
12	4.747	3.885	3.490	3.259	3.106	2.996	2.913	2.849	2.796	2.753	2.687	2.617	2.544	2.506	2.466	2.426	2.384	2.341	2.296
13	4.667	3.806	3.411	3.179	3.025	2.915	2.832	2.767	2.714	2.671	2.604	2.533	2.459	2.420	2.380	2.339	2.297	2.252	2.206
14	4.600	3.739	3.344	3.112	2.958	2.848	2.764	2.699	2.646	2.602	2.534	2.463	2.388	2.349	2.308	2.266	2.223	2.178	2.131
15	4.543	3.682	3.287	3.056	2.901	2.791	2.707	2.641	2.588	2.544	2.475	2.403	2.328	2.288	2.247	2.204	2.160	2.114	2.066
16	4.494	3.634	3.239	3.007	2.852	2.741	2.657	2.591	2.538	2.494	2.425	2.352	2.276	2.235	2.194	2.151	2.106	2.059	2.010
17	4.451	3.592	3.197	2.965	2.810	2.699	2.614	2.548	2.494	2.450	2.381	2.308	2.230	2.190	2.148	2.104	2.058	2.011	1.960
18	4.414	3.555	3.160	2.928	2.773	2.661	2.577	2.510	2.456	2.412	2.342	2.269	2.191	2.150	2.107	2.063	2.017	1.968	1.917
19	4.381	3.522	3.127	2.895	2.740	2.628	2.544	2.477	2.423	2.378	2.308	2.234	2.156	2.114	2.071	2.026	1.980	1.930	1.878
20	4.351	3.493	3.098	2.866	2.711	2.599	2.514	2.447	2.393	2.348	2.278	2.203	2.124	2.083	2.039	1.994	1.946	1.896	1.843
21	4.325	3.467	3.073	2.840	2.685	2.573	2.488	2.421	2.366	2.321	2.250	2.176	2.096	2.054	2.010	1.965	1.917	1.866	1.812
22	4.301	3.443	3.049	2.817	2.661	2.549	2.464	2.397	2.342	2.297	2.226	2.151	2.071	2.028	1.984	1.938	1.889	1.838	1.783
23	4.279	3.422	3.028	2.796	2.640	2.528	2.442	2.375	2.320	2.275	2.204	2.128	2.048	2.005	1.961	1.914	1.865	1.813	1.757
24	4.260	3.403	3.009	2.776	2.621	2.508	2.423	2.355	2.300	2.255	2.183	2.108	2.027	1.984	1.939	1.892	1.842	1.790	1.733
25	4.242	3.385	2.991	2.759	2.603	2.490	2.405	2.337	2.282	2.237	2.165	2.089	2.008	1.964	1.919	1.872	1.822	1.768	1.711
26	4.225	3.369	2.975	2.743	2.587	2.474	2.388	2.321	2.266	2.220	2.148	2.072	1.990	1.946	1.901	1.853	1.803	1.749	1.691
27	4.210	3.354	2.960	2.728	2.572	2.459	2.373	2.305	2.250	2.204	2.132	2.056	1.974	1.930	1.884	1.836	1.785	1.731	1.672
28	4.196	3.340	2.947	2.714	2.558	2.445	2.359	2.291	2.236	2.190	2.118	2.041	1.959	1.915	1.869	1.820	1.769	1.714	1.654
29	4.183	3.328	2.934	2.701	2.545	2.432	2.346	2.278	2.223	2.177	2.105	2.028	1.945	1.901	1.854	1.806	1.754	1.698	1.638
30	4.171	3.316	2.922	2.690	2.534	2.421	2.334	2.266	2.211	2.165	2.092	2.015	1.932	1.887	1.841	1.792	1.740	1.684	1.622
40	4.085	3.232	2.839	2.606	2.450	2.336	2.249	2.180	2.124	2.077	2.004	1.925	1.839	1.793	1.744	1.693	1.637	1.577	1.509
60	4.001	3.150	2.758	2.525	2.368	2.254	2.167	2.097	2.040	1.993	1.917	1.836	1.748	1.700	1.649	1.594	1.534	1.467	1.389
120	3.920	3.072	2.680	2.447	2.290	2.175	2.087	2.016	1.959	1.911	1.834	1.751	1.659	1.608	1.554	1.495	1.429	1.352	1.254
1000+	3.842	2.996	2.605	2.372	2.214	2.099	2.010	1.938	1.880	1.831	1.752	1.666	1.571	1.517	1.459	1.394	1.318	1.221	1.000

(h) *Slope*. Calculate a least-squares regression slope, a_{1y}, as follows:

$$a_{1y} = \frac{\sum_{i=1}^{N}\left(y_i - \bar{y}\right)\cdot\left(y_{refi} - \bar{y}_{ref}\right)}{\sum_{i=1}^{N}\left(y_{refi} - \bar{y}_{ref}\right)^2} \qquad \text{Eq. 1065.602-9}$$

Example:
N = 6000
y_1 = 2045.8
$\bar{y}$ = 1051.1
$y_{ref\ 1}$ = 2045.0
$\bar{y}_{ref}$ = 1055.3

$$a_{iy} = \frac{(2045.8 - 1050.1)\cdot(2045.0 - 1055.3) + \ldots + \left(y_{6000} - 1050.1\right)\cdot\left(y_{ref\,6000} - 1055.3\right)}{(2045.0 - 1055.3)^2 + \ldots + \left(y_{ref\,6000} - 1055.3\right)^2}$$

a_{1y} = 1.0110

(i) *Intercept.* Calculate a least-squares regression intercept, a_{0y}, as follows:

$$a_{0y} = \bar{y} - \left(a_{1y}\cdot\bar{y}_{ref}\right) \qquad \text{Eq. 1065.602-10}$$

Example:
$\bar{y}$ = 1050.1
a_{1y} = 1.0110
$\bar{y}_{ref}$ = 1055.3
a_{0y} = 1050.1 − (1.0110 · 1055.3)

a_{0y} = −16.8083

(j) *Standard estimate of error.* Calculate a standard estimate of error, *SEE*, as follows:

$$SEE_y = \sqrt{\frac{\sum_{i=1}^{N}\left[y_i - a_{0y} - \left(a_{1y}\cdot y_{refi}\right)\right]^2}{N-2}} \qquad \text{Eq. 1065.602-11}$$

Example:
N = 6000
y_1 = 2045.8
a_{0y} = −16.8083
a_{1y} = 1.0110
y_{refi} = 2045.0

$$SEE_y = \sqrt{\frac{\left[2045.8 - (-16.8083) - (1.0110\cdot 2045.0)\right]^2 + \ldots\left[y_{6000} - (-16.8083) - \left(1.0110\cdot y_{ref\,6000}\right)\right]^2}{6000-2}}$$

SEE_y = 5.348

(k) *Coefficient of determination.* Calculate a coefficient of determination, r^2, as follows:

$$r_y^2 = 1 - \frac{\sum_{i=1}^{N}\left[y_i - a_{0y} - \left(a_{1y} \cdot y_{refi}\right)\right]^2}{\sum_{i=1}^{N}\left[y_i - \bar{y}\right]^2} \qquad \text{Eq. 1065.602-12}$$

Example:

$N = 6000$

$y_1 = 2045.8$

$a_{0y} = -16.8083$

$a_{1y} = 1.0110$

$y_{refi} = 2045.0$

$\bar{y} = 1480.5$

$$r_y^2 = 1 - \frac{\left[2045.8 - (-16.8083) - (1.0110 \times 2045.0)\right]^2 + K\ \left[y_{6000} - (-16.8083) - \left(1.0110 \cdot y_{ref6000}\right)\right]^2}{\left[2045.8 - 1480.5\right]^2 + K\ \left[y_{6000} - 1480.5\right]^2}$$

$$r_y^2 = 0.9859$$

(l) *Flow-weighted mean concentration.* In some sections of this part, you may need to calculate a flow-weighted mean concentration to determine the applicability of certain provisions. A flow-weighted mean is the mean of a quantity after it is weighted proportional to a corresponding flow rate. For example, if a gas concentration is measured continuously from the raw exhaust of an engine, its flow-weighted mean concentration is the sum of the products of each recorded concentration times its respective exhaust molar flow rate, divided by the sum of the recorded flow rate values. As another example, the bag concentration from a CVS system is the same as the flow-weighted mean concentration because the CVS system itself flow-weights the bag concentration. You might already expect a certain flow-weighted mean concentration of an emission at its standard based on previous testing with similar engines or testing with similar equipment and instruments. If you need to estimate your expected flow-weighted mean concentration of an emission at its standard, we recommend using the following examples as a guide for how to estimate the flow-weighted mean concentration expected at the standard. Note that these examples are not exact and that they contain assumptions that are not always valid. Use good engineering judgement to determine if you can use similar assumptions.

(1) To estimate the flow-weighted mean raw exhaust NO_X concentration from a turbocharged heavy-duty compression-ignition engine at a NO_X standard of 2.5 g/(kW·hr), you may do the following:

(i) Based on your engine design, approximate a map of maximum torque versus speed and use it with the applicable normalized duty cycle in the standard-setting part to generate a reference duty cycle as described in §1065.610. Calculate the total reference work, W_{ref}, as described in §1065.650. Divide the reference work by the duty cycle's time interval, $\Delta t_{dutycycle}$, to determine mean reference power, $\bar{P}_{ref}$.

(ii) Based on your engine design, estimate maximum power, P_{max}, the design speed at maximum power, f_{nmax}, the design maximum intake manifold boost pressure, p_{inmax}, and temperature, T_{inmax}. Also, estimate a mean fraction of power that is lost due to friction and pumping, $\bar{P}_{frict}$. Use this information along with the engine displacement volume, V_{disp}, an approximate volumetric efficiency, η_V, and the number of engine strokes per power stroke (2-stroke or 4-stroke), N_{stroke} to estimate the maximum raw exhaust molar flow rate, $\dot{n}_{exhmax}$.

(iii) Use your estimated values as described in the following example calculation:

$$\bar{x}_{exp} = \frac{e_{std} \cdot W_{ref}}{M \cdot \dot{n}_{exhmax} \cdot \Delta t_{duty\ cycle} \cdot \left(\frac{\bar{P}_{ref} + \left(\bar{P}_{frict} \cdot P_{max}\right)}{P_{max}} \right)} \qquad \text{Eq. 1065.602-13}$$

$$\dot{n}_{exhmax} = \frac{p_{max} \cdot V_{disp} \cdot f_{nmax} \cdot \frac{2}{N_{stroke}} \cdot \eta_v}{R \cdot T_{max}} \qquad \text{Eq. 1065.602-14}$$

Example:

e_{NOx} = 2.5 g/(kW · hr)
W_{ref} = 11.883 kW · hr
M_{NOx} = 46.0055 g/mol = 46.0055 · 10^{-6} g/μmol
$\Delta t_{dutycycle}$ = 20 min = 1200 s
$\bar{P}_{ref}$ = 35.65 kW
P_{frict} = 15%
P_{max} = 125 kW
p_{max} = 300 kPa = 300000 Pa
V_{disp} = 3.011 = 0.0030 m^3
f_{nmax} = 2800 rev/min = 46.67 rev/s
N_{stroke} = 4 1/rev
η_V = 0.9
R = 8.314472 J/(mol·K)
T_{max} = 348.15 K

$$\dot{n}_{exhmax} = \frac{300 \cdot 3.0 \cdot 47.67 \cdot \frac{2}{4} \cdot 0.9}{8.314472 \cdot 348.15}$$

$\dot{n}_{exhmax}$ = 6.53 mol/s

$$\bar{x}_{exp} = \frac{2.5 \cdot 11.883}{46.0055 \cdot 10^{-6} \cdot 6.53 \cdot 1200 \cdot \left(\frac{35.65 + (0.15 \cdot 125)}{125} \right)}$$

$\bar{x}_{exp}$ = 189.4 μmol/mol

(2) To estimate the flow-weighted mean NMHC concentration in a CVS from a naturally aspirated nonroad spark-ignition engine at an NMHC standard of 0.5 g/(kW·hr), you may do the following:

(i) Based on your engine design, approximate a map of maximum torque versus speed and use it with the applicable normalized duty cycle in the standard-setting part to generate a reference duty cycle as described in §1065.610. Calculate the total reference work, W_{ref}, as described in §1065.650.

(ii) Multiply your CVS total molar flow rate by the time interval of the duty cycle, $\Delta t_{dutycycle}$. The result is the total diluted exhaust flow of the n_{dexh}.

(iii) Use your estimated values as described in the following example calculation:

$$\bar{x}_{NMHC} = \frac{e_{std} \cdot W_{ref}}{M \cdot \dot{n}_{dexh} \cdot \Delta t_{duty\ cycle}} \qquad \text{Eq. 1065.602-15}$$

Example:

e_{NMHC} = 1.5 g/(kW·hr)
W_{ref} = 5.389 kW·hr
M_{NMHC} = 13.875389 g/mol = 13.875389 · 10^{-6} g/μmol
$\dot{n}_{dexh}$ = 6.021 mol/s
$\Delta t_{dutycycle}$ = 30 min = 1800 s

$$\bar{x}_{NMHC} = \frac{1.5 \cdot 5.389}{13.875389 \cdot 10^{-6} \cdot 6.021 \cdot 1800}$$

$\bar{x}_{NMHC}$ = 53.8 μmol/mol

§ 1065.610 Duty cycle generation.

This section describes how to generate duty cycles that are specific to your engine, based on the normalized duty cycles in the standard-setting part. During an emission test, use a duty cycle that is specific to your engine to command engine speed, torque, and power, as applicable, using an engine dynamometer and an engine operator demand. Paragraph (a) of this section describes how to ''normalize'' your engine's map to determine the maximum test speed and torque for your engine. The rest of this section describes how to use these values to ''denormalize'' the duty cycles in the standard-setting parts, which are all published on a normalized basis. Thus, the term ''normalized'' in paragraph (a) of this section refers to different values than it does in the rest of the section.

(a) *Maximum test speed,* $f_{ntest.}$ This section generally applies to duty cycles for variable-speed engines. For constant-speed engines subject to duty cycles that specify normalized speed commands, use the no-load governed speed as the measured f_{ntest}. This is the highest engine speed where an engine outputs zero torque. For variable-speed engines, determine the measured f_{ntest} from the power-versus-speed map, generated according to § 1065.510, as follows:

(1) Based on the map, determine maximum power, P_{max}, and the speed at which maximum power occurred, f_{nPmax}. Divide every recorded power by P_{max} and divide every recorded speed by f_{nPmax}. The result is a normalized power-versus-speed map. Your measured f_{ntest} is the speed at which the sum of the squares of normalized speed and power is maximum, as follows:

$$f_{ntest} = f_{ni} \text{ at the maximum of } \left(f_{nnormi}^{2} + P_{normi}^{2}\right) \qquad \text{Eq. 1065.610-1}$$

Where:

f_{ntest} = maximum test speed.

i = an indexing variable that represents one recorded value of an engine map.

f_{nnormi} = an engine speed normalized by dividing it by f_{nPmax}.

P_{normi} = an engine power normalized by dividing it by P_{max}.

Example:

(f_{nnorm1} = 1.002, P_{norm1} = 0.978, f_{n1} = 2359.71)
(f_{nnorm2} = 1.004, P_{norm2} = 0.977, fn_2 = 2364.42)
(f_{nnorm3} = 1.006, P_{norm3} = 0.974, f_{n3} = 2369.13)
($f_{nnorm1}^2 + P_{norm1}^2$) = ($1.002^2 + 0.978^2$) = 1.960
($f_{nnorm1}^2 + P_{norm1}^2$) = ($1.004^2 + 0.977^2$) = 1.963
($f_{nnorm1}^2 + P_{norm1}^2$) = ($1.006^2 + 0.974^2$) = 1.961
maximum = 1.963 at i = 2
f_{ntest} = 2364.42 rev/min

(2) For variable-speed engines, transform normalized speeds to reference speeds according to paragraph (c) of this section by using the measured maximum test speed determined according to paragraph (a)(1) of this section—or use your declared maximum test speed, as allowed in § 1065.510.

(3) For constant-speed engines, transform normalized speeds to reference speeds according to paragraph (c) of this section by using the measured no-load governed—speed or use your declared maximum test speed, as allowed in § 1065.510.

(b) *Maximum test torque,* T_{test}. For constant-speed engines, determine the measured T_{test} from the power-versus-speed map, generated according to § 1065.510, as follows:

(1) Based on the map, determine maximum power, P_{max}, and the speed at which maximum power occurs, f_{nPmax}. Divide every recorded power by P_{max} and divide every recorded speed by f_{nPmax}. The result is a normalized power-versus-speed map. Your measured T_{test} is the speed at which the sum of the squares of normalized speed and power is maximum, as follows:

$$T_{test} = T_{i} \text{ at the maximum of } \left(f_{nnormi}^{2} + P_{normi}^{2}\right) \qquad \text{Eq. 1065.610-2}$$

Where:

T_{test} = maximum test torque.

Example:

(f_{nnorm1} = 1.002, P_{norm1} = 0.978, T_1 = 722.62 N · m)
(f_{nnorm2} = 1.004, P_{norm2} = 0.977, T_2 = 720.44 N · m)
(f_{nnorm3} = 1.006, P_{norm3} = 0.974, T_3 = 716.80 N · m)
($f_{nnorm1}^2 + P_{norm1}^2$) = ($1.002_2 + 0.978_2$) = 1.960
($f_{nnorm1}^2 + P_{norm1}^2$) = ($1.004^2 + 0.977^2$) = 1.963
($f_{nnorm1}^2 + P_{norm1}^2$) = ($1.006^2 + 0.974^2$) = 1.961
maximum = 1.963 at i = 2
T_{test} = 720.44 Nm

(2) Transform normalized torques to reference torques according to paragraph (d) of this section by using the measured maximum test torque determined according to paragraph (b)(1) of this section—or use your declared maximum test torque, as allowed in § 1065.510.

(c) *Generating reference speed values from normalized duty cycle speeds.* Transform normalized speed values to reference values as follows:

(1) *% speed.* If your normalized duty cycle specifies % speed values, use your declared warm idle speed and your maximum test speed to transform the duty cycle, as follows:

$$f_{nref} = \%\ speed \cdot (f_{ntest} - f_{nidle}) + f_{nidle} \qquad \text{Eq. 1065.610-3}$$

Example:

% speed = 85 %
f_{ntest} = 2364 rev/min
f_{nidle} = 650 rev/min
f_{nref} = 85 % · (2364 650) + 650
f_{nref} = 2107 rev/min

(2) *A, B, and C speeds.* If your normalized duty cycle specifies speeds as A, B, or C values, use your power-versus-speed curve to determine the lowest speed below maximum power at which 50 % of maximum power occurs. Denote this value as n_{lo}. Also determine the highest speed above maximum power at which 70 % of maximum power occurs. Denote this value as n_{hi} Use n_{hi} and n_{lo} to calculate reference values for A, B, or C speeds as follows:

$$f_{nrefA} = 0.25 \cdot (n_{hi} - n_{lo}) + n_{lo} \qquad \text{Eq. 1065.610-4}$$

$$f_{nrefB} = 0.50 \cdot (n_{hi} - n_{lo}) + n_{lo} \qquad \text{Eq. 1065.610-5}$$

$$f_{nrefC} = 0.75 \cdot (n_{hi} - n_{lo}) + n_{lo} \qquad \text{Eq. 1065.610-6}$$

Example:

n_{lo} = 1005 rev/min
n_{hi} = 2385 rev/min
f_{nrefA} = 0.25 · (2385 1005) + 1005
f_{nrefB} = 0.50 · (2385 1005) + 1005
f_{nrefC} = 0.75 · (2385 1005) + 1005
f_{nrefA} = 1350 rev/min
f_{nrefB} = 1695 rev/min
f_{nrefC} = 2040 rev/min

(3) *Intermediate speed.* If your normalized duty cycle specifies a speed as ''intermediate speed,'' use your torque-versus-speed curve to determine the speed at which maximum torque occurs. This is peak torque speed. Identify your reference intermediate speed as one of the following values:

(i) Peak torque speed if it is between (60 and 75) % of maximum test speed.

(ii) 60% of maximum test speed if peak torque speed is less than 60% of maximum test speed.

(iii) 75% of maximum test speed if peak torque speed is greater than 75% of maximum test speed.

(d) *Generating reference torques from normalized duty-cycle torques.* Transform normalized torques to reference torques using your map of maximum torque versus speed.

(1) *Reference torque for variable-speed engines.* For a given speed point, multiply the corresponding % torque by the maximum torque at that speed, according to your map. Linearly interpolate mapped torque values to determine torque between mapped speeds. The result is the reference torque for each speed point.

(2) *Reference torque for constant-speed engines.* Multiply a % torque value by your maximum test torque. The result is the reference torque for each point. Note that if your constant-speed engine is subject to duty cycles that specify normalized speed commands, use the provisions of paragraph (d)(1) of this section to transform your normalized torque values.

(3) *Permissible deviations for any engine.* If your engine does not operate below a certain minimum torque under normal in-use conditions, you may use a declared minimum torque as the reference value instead of any value denormalized to be less than the declared value. For example, if your engine is connected to an automatic transmission, it may have a minimum torque called curb idle transmission torque (CITT). In this case, at idle conditions (i.e., 0% speed, 0% torque), you may use CITT as a reference value instead of 0 N·m.

(e) *Generating reference power values from normalized duty cycle powers.* Transform normalized power values to reference speed and power values using your map of maximum power versus speed.

(1) First transform normalized speed values into reference speed values. For a given speed point, multiply the corresponding % power by the maximum test power defined in the standard-setting part. The result is the reference power for each speed point. You may calculate a corresponding reference torque for each point and command that reference torque instead of a reference power.

(2) If your engine does not operate below a certain power under normal in-use conditions, you may use a declared minimum power as the reference value instead of any value denormalized to be less than the declared value. For example, if your engine is directly connected to a propeller, it may have a minimum power called idle power. In this case, at idle conditions (i.e., 0% speed, 0% power), you may use a corresponding idle power as a reference power instead of 0 kW.

§ 1065.630 1980 international gravity formula.

The acceleration of Earth's gravity, a_g, varies depending on your location. Calculate a_g at your latitude, as follows:

$$a_g = 9.7803267715 \cdot [1 + s$$
$$5.2790414 \cdot 10^{-3} \cdot \sin^2(\theta) +$$
$$2.32718 \cdot 10^{-5} \cdot \sin^4(\theta) +$$
$$1.262 \cdot 10^{-7} \cdot \sin^6(\theta) +$$
$$7 \cdot 10^{-10} \cdot \sin^8(\theta)] \qquad \text{Eq. 1065.630-1}$$

Where:

θ = Degrees north or south latitude.

Example:

$\theta = 45°$

$a_g = 9.7803267715 \cdot (1+$
$5.2790414 \cdot 10^{-3} \cdot \sin^2(45) +$
$2.32718 \cdot 10^{-5} \cdot \sin^4(45) +$
$1.262 \cdot 10^{-7} \cdot \sin^6(45) +$
$7 \cdot 10^{-10} \cdot \sin^8(45)$
$a_g = 9.8178291229$ m/s^2

§ 1065.640 Flow meter calibration calculations.

This section describes the calculations for calibrating various flow meters. After you calibrate a flow meter using these calculations, use the calculations described in § 1065.642 to calculate flow during an emission test. Paragraph (a) of this section first describes how to convert reference flow meter outputs for use in the calibration equations, which are presented on a molar basis. The remaining paragraphs describe the calibration calculations that are specific to certain types of flow meters.

(a) *Reference meter conversions.* The calibration equations in this section use molar flow rate, $\dot{n}_{ref}$, as a reference quantity. If your reference meter outputs a flow rate in a different quantity, such as standard volume rate, $\dot{V}_{stdref}$, actual volume rate, $\dot{V}_{actref}$, or mass rate, $\dot{m}_{ref}$, convert your reference meter output to a molar flow rate using the following equations, noting that while

values for volume rate, mass rate, pressure, temperature, and molar mass may change during an emission test, you should ensure that they are as constant as practical for each individual set point during a flow meter calibration:

$$\dot{n}_{ref} = \frac{\dot{V}_{stdref} \cdot P_{std}}{T_{std} \cdot R} = \frac{V_{actref} \cdot P_{act}}{T_{act} \cdot R} = \frac{\dot{m}_{ref}}{M_{mix}} \qquad \text{Eq.1065.640} - 1$$

Where:

$\dot{n}_{ref}$ = reference molar flow rate.

$\dot{V}_{stdref}$ = reference volume flow rate, corrected to a standard pressure and a standard temperature.

$\dot{V}_{actref}$ = reference volume flow rate at the actual pressure and temperature of the flow rate.

$\dot{m}_{ref}$ = reference mass flow.

P_{std} = standard pressure.

P_{act} = actual pressure of the flow rate.

T_{std} = standard temperature.

T_{act} = actual temperature of the flow rate.

R = molar gas constant.

M_{mix} = molar mass of the flow rate.

Example 1:

$\dot{V}_{stdref}$ = 1000.00 ft³/min = 0.471948 m/s

P = 29.9213 in Hg @ 32 °F = 101325 Pa

T = 68.0 °F = 293.15 K

R = 8.314472 J/(mol·K)

$$\dot{n}_{ref} = \frac{0.471948 \cdot 101325}{293.15 \cdot 8.314472}$$

$\dot{n}_{ref}$ = 19.169 mol/s

Example 2:

$\dot{m}_{ref}$ = 17.2683 kg/min = 287.805 g/s

M_{mix} = 28.7805 g/mol

$$\dot{n}_{ref} = \frac{287.05}{28.7805}$$

$\dot{n}_{ref}$ =10.0000 mol/s

(b) *PDP calibration calculations.* For each restrictor position, calculate the following values from the mean values determined in § 1065.340, as follows:

(1) PDP volume pumped per revolution, V_{rev} (m³/rev):

$$v_{rev} = \frac{\overline{\dot{n}}_{ref} \cdot R \cdot \overline{T}_{in}}{\overline{P}_{in} \cdot \overline{f}_{nPDP}} \qquad \text{Eq. 1065.640-2}$$

Example:

$\overline{\dot{n}}_{ref}$ = 25.096 mol/s

R = 8.314472 J/(mo·lK)

$\overline{T}_{in}$ = 299.5 K

$\overline{P}_{in}$ = 98290 Pa

$\overline{f}_{nPDP}$ = 1205.1 rev/min = 20.085 rev/s

$$V_{rev} = \frac{25.096 \cdot 8.314472 \cdot 299.5}{98290 \cdot 20.085}$$

V_{rev} = 0.03166 m³/rev

(2) PDP slip correction factor, K_s (s/rev):

$$K_s = \frac{1}{\overline{f}_{rPDP}} \cdot \sqrt{\frac{\overline{P}_{out} - \overline{P}_{in}}{\overline{P}_{out}}} \qquad \text{Eq. 1065.640-3}$$

Example:

$\overline{f}_{nPDP}$ = 1205.1 rev/min = 20.085 rev/s

$\overline{P}_{out}$ = 100.103 kPa

$\overline{P}_{in}$= 98.290 kPa

$$K_s = \frac{1}{20.085} \cdot \sqrt{\frac{100.103 - 98.290}{100.103}}$$

K_s = 0.006700 s/rev

(3) Perform a least-squares regression of PDP volume pumped per revolution, V_{rev}, versus PDP slip correction factor, K_s, by calculating slope, a_1, and intercept, a_0, as described in § 1065.602.

(4) Repeat the procedure in paragraphs (b)(1) through (3) of this section for every speed that you run your PDP.

(5) The following example illustrates these calculations:

TABLE 1 OF § 1065.640—EXAMPLE OF PDP CALIBRATION DATA

$\bar{f}_{nPDP}$	a_1	a_0
755.0	50.43	0.056
987.6	49.86	−0.013
1254.5	48.54	0.028
1401.3	47.30	−0.061

(6) For each speed at which you operate the PDP, use the corresponding slope, a_1, and intercept, a_0, to calculate flow rate during emission testing as described in § 1065.642.

(c) *Venturi governing equations and permissible assumptions.* This section describes the governing equations and permissible assumptions for calibrating a venturi and calculating flow using a venturi. Because a subsonic venturi (SSV) and a critical-flow venturi (CFV) both operate similarly, their governing equations are nearly the same, except for the equation describing their pressure ratio, r (i.e., r_{SSV} versus r_{CFV}). These governing equations assume one-dimensional isentropic inviscid compressible flow of an ideal gas. In paragraph (c)(4) of this section, we describe other assumptions that you may make, depending upon how you conduct your emission tests. If we do not allow you to assume that the measured flow is an ideal gas, the governing equations include a first-order correction for the behavior of a real gas; namely, the compressibility factor, Z. If good engineering judgment dictates using a value other than Z=1, you may either use an appropriate equation of state to determine values of Z as a function of measured pressures and temperatures, or you may develop your own calibration equations based on good engineering judgment. Note that the equation for the flow coefficient, C_f, is based on the ideal gas assumption that the isentropic exponent, γ, is equal to the ratio of specific heats, C_p/C_v. If good engineering judgment dictates using a real gas isentropic exponent, you may either use an appropriate equation of state to determine values of γ as a function of measured pressures and temperatures, or you may develop your own calibration equations based on good engineering judgment. Calculate molar flow rate, $\dot{n}$, as follows:

$$\dot{n} = C_d \cdot C_f \cdot \frac{A_t \cdot p_{in}}{\sqrt{Z \cdot M_{mix} \cdot R \cdot T_{in}}} \qquad \text{Eq. 1065.640-4}$$

Where:

C_d = Discharge coefficient, as determined in paragraph (c)(1) of this section.

C_f = Flow coefficient, as determined in paragraph (c)(2) of this section.

A_t = Venturi throat cross-sectional area.

p_{in} = Venturi inlet absolute static pressure.

Z = Compressibility factor.

M_{mix} = Molar mass of gas mixture.

R = Molar gas constant.

T_{in} = Venturi inlet absolute temperature.

(1) Using the data collected in § 1065.340, calculate C_d using the following equation:

$$C_d = \dot{n}_{ref} \cdot \frac{\sqrt{Z \cdot M_{mix} \cdot R \cdot T_{in}}}{C_f \cdot A_t \cdot p_{in}} \qquad \text{Eq. 1065.640-5}$$

Where:

$\dot{n}_{ref}$ = A reference molar flow rate.

(2) Determine C_f using one of the following methods:

(i) For CFV flow meters only, determine C_{fCFV} from the following table based on your values for β and γ, using linear interpolation to find intermediate values:

TABLE 2 OF § 1065.640—C_{fCFV} VERSUS β AND γ FOR CFV FLOW METERS

C_{fCFV}		
β	γ_{exh} = 1.385	γ_{dexh} = γ_{air} = 1.399
0.000	0.6822	0.6846
0.400	0.6857	0.6881
0.500	0.6910	0.6934
0.550	0.6953	0.6977
0.600	0.7011	0.7036
0.625	0.7047	0.7072
0.650	0.7089	0.7114
0.675	0.7137	0.7163
0.700	0.7193	0.7219
0.720	0.7245	0.7271
0.740	0.7303	0.7329
0.760	0.7368	0.7395
0.770	0.7404	0.7431

TABLE 2 OF § 1065.640—C_{fCFV} VERSUS β AND γ FOR CFV FLOW METERS—Continued

C_{fCFV}		
β	γ_{exh} = 1.385	γ_{dexh} = γ_{air} = 1.399
0.780	0.7442	0.7470
0.790	0.7483	0.7511
0.800	0.7527	0.7555
0.810	0.7573	0.7602
0.820	0.7624	0.7652
0.830	0.7677	0.7707
0.840	0.7735	0.7765
0.850	0.7798	0.7828

(ii) For any CFV or SSV flow meter, you may use the following equation to calculate C_f:

$$C_f = \left[\frac{2 \cdot \gamma \cdot \left(r^{\frac{\gamma-1}{\gamma}} - 1 \right)}{(\gamma - 1) \cdot \left(\beta^4 - r^{\frac{-2}{\gamma}} \right)} \right]^{\frac{1}{2}} \quad \text{Eq. 1065.640-6}$$

Where:

γ = isentropic exponent. For an ideal gas, this is the ratio of specific heats of the gas mixture, C_p/C_v.

r = Pressure ratio, as determined in paragraph (c)(3) of this section.

β = Ratio of venturi throat to inlet diameters.

(3) Calculate *r* as follows:

(i) For SSV systems only, calculate r_{SSV} using the following equation:

$$r_{SSV} = 1 - \frac{\Delta p}{p_{in}} \quad \text{Eq. 1065.640-7}$$

Where:

Δp_{SSV} = Differential static pressure; venturi inlet minus venturi throat.

(ii) For CFV systems only, calculate r_{CFV} iteratively using the following equation:

$$r_{CFV}^{\frac{1-\gamma}{\gamma}} + \left(\frac{\gamma - 1}{2} \right) \cdot \beta^4 \cdot r_{CFV}^{\frac{2}{\gamma}} = \frac{\gamma + 1}{2} \quad \text{Eq. 1065.640-8}$$

(4) You may make any of the following simplifying assumptions of the governing equations, or you may use good engineering judgment to develop more appropriate values for your testing:

(i) For emission testing over the full ranges of raw exhaust, diluted exhaust and dilution air, you may assume that the gas mixture behaves as an ideal gas: *Z*=1.

(ii) For the full range of raw exhaust you may assume a constant ratio of specific heats of γ =1.385.

(iii) For the full range of diluted exhaust and air (e.g., calibration air or dilution air), you may assume a constant ratio of specific heats of γ = 1.399.

(iv) For the full range of diluted exhaust and air, you may assume the molar mass of the mixture is a function only of the amount of water in the dilution air or calibration air, x_{H2O}, determined as described in § 1065.645, as follows:

$$M_{mix} = M_{air} \cdot \left(1 - x_{H2O}\right) + M_{H2O} \cdot x_{H2O} \qquad \text{Eq. 1065.640-9}$$

Example:

M_{air} = 28.96559 g/mol
x_{H2O} = 0.0169 mol/mol
M_{H2O} = 18.01528 g/mol
M_{mix} = 28.96559 · (1 0.0169) + 18.01528 · 0.0169
M_{mix} = 28.7805 g/mol

(v) For the full range of diluted exhaust and air, you may assume a constant molar mass of the mixture, M_{mix}, for all calibration and all testing as long as your assumed molar mass differs no more than ±1% from the estimated minimum and maximum molar mass during calibration and testing. You may assume this, using good engineering judgment, if you sufficiently control the amount of water in calibration air and in dilution air or if you remove sufficient water from both calibration air and dilution air. The following table gives examples of permissible ranges of dilution air dewpoint versus calibration air dewpoint:

TABLE 3 OF § 1065.640—EXAMPLES OF DILUTION AIR AND CALIBRATION AIR DEWPOINTS AT WHICH YOU MAY ASSUME A CONSTANT M_{mix}.

If calibration T_{dew} (°C) is...	assume the following constant M_{mix} (g/mol)...	for the following ranges of T_{dew} (°C) during emission tests [a]
dry	28.96559	dry to 18.
0	28.89263	dry to 21.
5	28.86148	dry to 22.
10	28.81911	dry to 24.
15	28.76224	dry to 26.
20	28.68685	−8 to 28.
25	28.58806	12 to 31.
30	28.46005	23 to 34.

[a] Range valid for all calibration and emission testing over the atmospheric pressure range (80.000 to 103.325) kPa.

(5) The following example illustrates the use of the governing equations to calculate the discharge coefficient, C_d of an SSV flow meter at one reference flow meter value. Note that calculating C_d for a CFV flow meter would be similar, except that C_f would be determined from Table 1 of this section or calculated iteratively using values of β and γ as described in paragraph (c)(2) of this section.

Example:

$\dot{n}_{ref}$ = 57.625 mol/s
Z = 1
M_{mix} = 28.7805 g/mol = 0.0287805 kg/mol
R = 8.314472 J/(mol·K)
T_{in} = 298.15 K
A_t = 0.01824 m²
p_{in} = 99132.0 Pa
γ = 1.399
β = 0.8
Δp = 2.312 kPa

$$r_{SSV} = 1 - \frac{2.312}{99.132} = 0.977$$

$$C_f = \left[\frac{2 \cdot 1.399 \cdot \left(0.977^{\frac{1.399-1}{1.399}} - 1 \right)}{(1.399 - 1) \cdot \left(0.8^4 - 0.977^{\frac{-2}{1.399}} \right)} \right]^{\frac{1}{2}}$$

C_f = 0.274

$$C_d = 57.625 \cdot \frac{\sqrt{1 \cdot 0.0287805 \cdot 8.314472 \cdot 298.15}}{0.274 \cdot 0.01824 \cdot 99132.0}$$

$C_d = 0.981$

(d) *SSV calibration*. Perform the following steps to calibrate an SSV flow meter:

(1) Calculate the Reynolds number, $Re^{\#}$, for each reference molar flow rate, using the throat diameter of the venturi, d_t. Because the dynamic viscosity, μ, is needed to compute $Re^{\#}$, you may use your own fluid viscosity model to determine μ for your calibration gas (usually air), using good engineering judgment. Alternatively, you may use the Sutherland three-coefficient viscosity model to approximate μ, as shown in the following sample calculation for $Re^{\#}$:

$$Re^{\#} = \frac{4 \cdot M_{mix} \cdot \dot{n}_{ref}}{\pi \cdot d_t \cdot \mu} \qquad \text{Eq. 1065.640-10}$$

Where, using the Sutherland three-coefficient viscosity model:

$$\mu = \mu_0 \cdot \left(\frac{T_{in}}{T_0}\right)^{\frac{3}{2}} \cdot \left(\frac{T_0 + S}{T_{in} + S}\right) \qquad \text{Eq. 1065.640-11}$$

Where:

μ = Dynamic viscosity of calibration gas.

μ_0 = Sutherland reference viscosity.

T_0 = Sutherland reference temperature.

S = Sutherland constant.

TABLE 3 OF § 1065.640—SUTHERLAND THREE-COEFFICIENT VISCOSITY MODEL PARAMETERS

Gas [a]	μ_0 kg/(m · s)	T_0 K	S K	Temp range within ±2% error K	Pressure limit kPa
Air	$1.716 \cdot 10^{-5}$	273	111	170 to 1900	≤ 1800
CO_2	$1.370 \cdot 10_{-5}$	273	222	190 to 1700	≤ 3600
H_2O	$1.12 \cdot 10^{-5}$	350	1064	360 to 1500	≤ 10000
O_2	$1.919 \cdot 10^{-5}$	273	139	190 to 2000	≤ 2500
N_2	$1.663 \cdot 10^{-5}$	273	107	100 to 1500	≤ 1600

[a] Use tabulated parameters only for the pure gases, as listed. Do not combine parameters in calculations to calculate viscosities of gas mixtures.

Example:

$\mu_0 = 1.7894 \cdot 10^{-5}$ kg/(m·s)

$T_0 = 273.11$ K

$S = 110.56$ K

$$\mu = 1.7894 \cdot 10^{-5} \cdot \left(\frac{298.15}{273.11}\right)^{\frac{3}{2}} \cdot \left(\frac{273.11 + 110.56}{298.15 + 110.56}\right)$$

$\mu = 1.916 \cdot 10^{-5}$ kg/(m·s)

$M_{mix} = 28.7805$ g/mol

$\dot{n}_{ref} = 57.625$ mol/s

$d_t = 152.4$ mm

$T_{in} = 298.15$ K

$$Re^{\#} = \frac{4 \cdot 28.7805 \cdot 57.625}{3.14159 \cdot 152.4 \cdot 1.916 \cdot 10^{-5}}$$

$Re^{\#} = 7.2317 \cdot 10^5$

(2) Create an equation for C_d versus $Re^{\#}$, using paired values of ($Re^{\#}$, C_d). For

the equation, you may use any mathematical expression, including a polynomial or a power series. The following equation is an example of a commonly used mathematical expression for relating C_d and $Re^{\#}$:

$$C_d = a_0 - a_1 \cdot \sqrt{\frac{10^6}{Re^{\#}}} \qquad \text{Eq. 1065.640-12}$$

(3) Perform a least-squares regression analysis to determine the best-fit coefficients to the equation and calculate the equation's regression statistics, *SEE* and r^2, according to § 1065.602.

(4) If the equation meets the criteria of $SEE \leq 0.5\% \cdot \dot{n}_{refmax}$ and $r^2 \geq 0.995$, you may use the equation to determine C_d for emission tests, as described in § 1065.642.

(5) If the *SEE* and r^2 criteria are not met, you may use good engineering judgment to omit calibration data points to meet the regression statistics. You must use at least seven calibration data points to meet the criteria.

(6) If omitting points does not resolve outliers, take corrective action. For example, select another mathematical expression for the C_d versus $Re^{\#}$ equation, check for leaks, or repeat the calibration process. If you must repeat the process, we recommend applying tighter tolerances to measurements and allowing more time for flows to stabilize.

(7) Once you have an equation that meets the regression criteria, you may use the equation only to determine flow rates that are within the range of the reference flow rates used to meet the C_d versus $Re^{\#}$ equation's regression criteria.

(e) *CFV calibration*. Some CFV flow meters consist of a single venturi and some consist of multiple venturis, where different combinations of venturis are used to meter different flow rates. For CFV flow meters that consist of multiple venturis, either calibrate each venturi independently to determine a separate discharge coefficient, C_d, for each venturi, or calibrate each combination of venturis as one venturi. In the case where you calibrate a combination of venturis, use the sum of the active venturi throat areas as A_t, the sum of the active venturi throat diameters as d_t, and the ratio of venturi throat to inlet diameters as the ratio of the sum of the active venturi throat diameters to the diameter of the common entrance to all of the venturis. To determine the C_d for a single venturi or a single combination of venturis, perform the following steps:

(1) Use the data collected at each calibration set point to calculate an individual C_d for each point using Eq. 1065.640–4.

(2) Calculate the mean and standard deviation of all the C_d values according to Eqs. 1065.602–1 and 1065.602–2.

(3) If the standard deviation of all the C_d values is less than or equal to 0.3% of the mean C_d, then use the mean C_d in Eq 1065.642–6, and use the CFV only down to the lowest Δp_{CFV} measured during calibration.

(4) If the standard deviation of all the C_d values exceeds 0.3% of the mean C_d, omit the C_d values corresponding to the data point collected at the lowest Δp_{CFV} measured during calibration.

(5) If the number of remaining data points is less than seven, take corrective action by checking your calibration data or repeating the calibration process. If you repeat the calibration process, we recommend checking for leaks, applying tighter tolerances to measurements and allowing more time for flows to stabilize.

(6) If the number of remaining C_d values is seven or greater, recalculate the mean and standard deviation of the remaining C_d values.

(7) If the standard deviation of the remaining C_d values is less than or equal to 0.3 % of the mean of the remaining C_d, use that mean C_d in Eq 1065.642–6, and use the CFV values only down to the lowest Δp_{CFV} associated with the remaining C_d.

(8) If the standard deviation of the remaining C_d still exceeds 0.3% of the mean of the remaining C_d values, repeat the steps in paragraph (e) (4) through (8) of this section.

§ 1065.642 SSV, CFV, and PDP molar flow rate calculations.

This section describes the equations for calculating molar flow rates from various flow meters. After you calibrate a flow meter according to

§ 1065.640, use the calculations described in this section to calculate flow during an emission test.

(a) *PDP molar flow rate.* Based upon the speed at which you operate the PDP for a test interval, select the corresponding slope, a_1, and intercept, a_0, as calculated in § 1065.640, to calculate molar flow rate, $\dot{n}$, as follows:

$$\dot{n} = f_{nPDP} \cdot \frac{p_{in} \cdot V_{rev}}{R \cdot T_{in}} \qquad \text{Eq. 1065.642-1}$$

Where:

$$V_{rev} = \frac{a_1}{f_{nPDP}} \cdot \sqrt{\frac{p_{out} - p_{in}}{p_{in}}} + a_0 \qquad \text{Eq. 1065.642-2}$$

Example:

a_1 = 50.43
f_{nPDP} = 755.0 rev/min = 12.58 rev/s
p_{out} = 99950 Pa
p_{in} = 98575 Pa
a_0 = 0.056
R = 8.314472 J/(mol·K)
T_{in} = 323.5 K
C_p = 1000 (J/m³)/kPa
C_t = 60 s/min

$$V_{rev} = \frac{50.43}{755} \cdot \sqrt{\frac{99950 - 98575}{98575}} + 0.056$$

V_{rev} = 0.06389 m³/rev

$$\dot{n} = 12.58 \cdot \frac{98575 \cdot 0.06389}{8.314472 \cdot 323.5}$$

$\dot{n}$ = 29.464 mol/s

(b) *SSV molar flow rate.* Based on the C_d versus $Re^{\#}$ equation you determined according to § 1065.640, calculate SSV molar flow rate, $\dot{n}$ during an emission test as follows:

$$\dot{n} = C_d \cdot C_f \cdot \frac{A_t \cdot p_{in}}{\sqrt{Z \cdot M_{mix} \cdot R \cdot T_{in}}} \qquad \text{Eq. 1065.642-3}$$

Example:

A_t = 0.01824 m²
p_{in} = 99132 Pa
Z = 1
M_{mix} = 28.7805 g/mol = 0.0287805 kg/mol
R = 8.314472 J/(mol·K)
T_{in} = 298.15 K
$Re^{\#}$ = 7.232·10⁵
γ = 1.399
β = 0.8
Δp = 2.312 kPa
Using Eq. 1065.640–6,
r_{ssv} = 0.997
Using Eq. 1065.640–5,
C_f = 0.274
Using Eq. 1065.640–4,
C_d = 0.990

$$\dot{n} = 0.990 \cdot 0.274 \cdot \frac{0.01824 \cdot 99132}{\sqrt{1 \cdot 0.0287805 \cdot 8.314472 \cdot 298.15}}$$

$\dot{n}$ = 58.173 mol/s

(c) *CFV molar flow rate.* Some CFV flow meters consist of a single venturi and some consist of multiple venturis, where different combinations of venturis are used to meter different flow rates. If you use multiple venturis and you calibrated each venturi independently to determine a separate discharge coefficient, C_d, for each venturi, calculate the individual molar flow rates through each venturi and sum all their flow rates to determine $\dot{n}$. If you

use multiple venturis and you calibrated each combination of venturis, calculate $\dot{n}$ using the sum of the active venturi throat areas as A_t, the sum of the active venturi throat diameters as d_t, and the ratio of venturi throat to inlet diameters as the ratio of the sum of the active venturi throat diameters to the diameter of the common entrance to all of the venturis. To calculate the molar flow rate through one venturi or one combination of venturis, use its respective mean C_d and other constants you determined according to § 1065.640 and calculate its molar flow rate $\dot{n}$ during an emission test, as follows:

$$\dot{n} = C_d \cdot C_f \cdot \frac{A_t \cdot p_{in}}{\sqrt{Z \cdot M_{mix} \cdot R \cdot T_{in}}} \qquad \text{Eq. 1065.642-6}$$

Example:

C_d = 0.985
C_f = 0.7219
A_t = 0.00456 m²
p_{in} = 98836 Pa
Z = 1
M_{mix} = 28.7805 g/mol = 0.0287805 kg/mol
R = 8.314472 J/(mol·K)
T_{in} = 378.15 K
$\dot{n}$ = 0.985·0.712

$$\frac{0.00456 \cdot 98836}{\sqrt{1 \cdot 0.0287805 \cdot 8.314472 \cdot 378.15}}$$

$\dot{n}$ = 33.690 mol/s

§ 1065.645 Amount of water in an ideal gas.

This section describes how to determine the amount of water in an ideal gas, which you need for various performance verifications and emission calculations. Use the equation for the vapor pressure of water in paragraph (a) of this section or another appropriate equation and, depending on whether you measure dewpoint or relative humidity, perform one of the calculations in paragraph (b) or (c) of this section.

(a) *Vapor pressure of water.* Calculate the vapor pressure of water for a given saturation temperature condition, T_{sat}, as follows, or use good engineering judgment to use a different relationship of the vapor pressure of water to a given saturation temperature condition:

(1) For humidity measurements made at ambient temperatures from (0 to 100) °C, or for humidity measurements made over super-cooled water at ambient temperatures from (−50 to 0) °C, use the following equation:

$$-\log_{10}(p_{H20}) = 10.79574 \cdot \left(\frac{273.16}{T_{sat}} - 1\right) + 5.02800 \cdot \log_{10}\left(\frac{T_{sat}}{273.16}\right) + 1.50475 \cdot 10^{-4} \cdot \left(10^{-8.2969 \cdot \left(\frac{T_{sat}}{273.16}\right)} - 1\right) + 0.42873 \cdot 10^{-3} \cdot \left(1 - 10^{4.76955 \cdot \left(1 - \frac{273.16}{T_{sat}}\right)}\right) + 0.21386 \qquad \text{Eq. 1065.645-1}$$

Where:

p_{H20} = vapor pressure of water at saturation temperature condition, kPa.

T_{sat} = saturation temperature of water at measured conditions, K.

Example:

T_{sat} = 9.5 °C
T_{dsat}= 9.5 + 273.15 = 282.65 K

$$-\log_{10}(p_{H20}) = 10.79574 \cdot \left(\frac{273.16}{282.65} - 1\right) + 5.02800 \cdot \log_{10}\left(\frac{282.65}{273.16}\right) + 1.50475 \cdot 10^{-4} \cdot \left(10^{-8.2969 \cdot \left(\frac{282.65}{273.16}\right)} - 1\right) + 0.42873 \cdot 10^{-3} \cdot \left(1 - 10^{4.76955 \cdot \left(1 - \frac{273.16}{282.65}\right)}\right) + 0.21386$$

$-\log_{10}(P_{H20}) = -0.074297$

$p_{H20} = 10^{0.074297} = 1.1866$ kPa

(2) For humidity measurements over ice at ambient temperatures from (−100 to 0) °C, use the following equation:

$$-\log_{10}(p_{sat}) = 9.09685 \cdot \left(\frac{273.16}{T_{sat}} - 1\right) + 3.56654 \cdot \log_{10}\left(\frac{273.16}{T_{sat}}\right) + 0.87682 \cdot \left(\frac{257.75}{T_{sat}} - 1\right) + 0.21386 \qquad \text{Eq. 1065.645-2}$$

Example:

$T_{ice} = -15.4$ °C

$T_{ice} = -15.4 + 273.15 = 257.75$ K

$$-\log_{10}(p_{sat}) = 9.09685 \cdot \left(\frac{273.16}{257.75} - 1\right) + 3.56654 \cdot \log_{10}\left(\frac{273.16}{257.75}\right) + 0.87682 \cdot \left(\frac{257.75}{273.16} - 1\right) + 0.21386$$

$-\log_{10}(p_{H20}) = -0.79821$

$P_{H20} = 10^{0.074297} = 0.15941$ kPa

(b) *Dewpoint.* If you measure humidity as a dewpoint, determine the amount of water in an ideal gas, x_{H20}, as follows:

$$x_{H2O} = \frac{p_{H2O}}{p_{abs}} \qquad \text{Eq. 1065.645-3}$$

Where:

x_{H20} = amount of water in an ideal gas.

p_{H20} = water vapor pressure at the measured dewpoint, $T_{sat} = T_{dew}$.

p_{abs} = wet static absolute pressure at the location of your dewpoint measurement.

Example:

$P_{abs} = 99.980$ kPa

$T_{sat} = T_{dew} = 9.5$ °C

Using Eq. 1065.645–2,

$P_{H20} = 1.1866$ kPa

$x_{H2O} = 1.1866/99.980$

$x_{H2O} = 0.011868$ mol/mol

(c) *Relative humidity.* If you measure humidity as a relative humidity, *RH%*, determine the amount of water in an ideal gas, x_{H20}, as follows:

$$x_{H2O} = \frac{RH\% \cdot p_{H2O}}{p_{abs}} \qquad \text{Eq. 1065.645-4}$$

Where:

x_{H20} = amount of water in an ideal gas.

RH% = relative humidity.

P_{H20} = water vapor pressure at 100% relative humidity at the location of your relative humidity measurement, $T_{sat} = T_{amb}$.

P_{abs} = wet static absolute pressure at the location of your relative humidity measurement.

Example:

RH% = 50.77%

$P_{abs} = 99.980$ kPa

$T_{sat} = T_{amb} = 20$ °C

Using Eq. 1065.645–2,

$P_{H20} = 2.3371$ kPa

$x_{H2O} = (50.77\% \cdot 2.3371)/99.980$

$x_{H2O} = 0.011868$ mol/mol

§ 1065.650 Emission calculations.

(a) *General.* Calculate brake-specific emissions over each test interval in a duty cycle. Refer to the standard-setting part for any calculations you might need to determine a composite result, such as a calculation that weights and sums the results of individual test intervals in a duty cycle. We specify three alternative ways to

calculate brake-specific emissions, as follows:

(1) For any testing, you may calculate the total mass of emissions, as described in paragraph (b) of this section, and divide it by the total work generated over the test interval, as described in paragraph (c) of this section, using the following equation:

$$e = \frac{m}{W} \qquad \text{Eq. 1065.650-1}$$

Example:

m_{NO_X} = 64.975 g
W = 25.783 kW·hr
e_{NO_X} = 64.975/25.783
e_{NO_X} = 2.520 g/(kW·hr)

(2) For discrete-mode steady-state testing, you may calculate the ratio of emission mass rate to power, as described in paragraph (d) of this section, using the following equation:

$$e = \frac{\overline{\dot{m}}}{\overline{P}} \qquad \text{Eq. 1065.650-2}$$

(3) For field testing, you may calculate the ratio of total mass to total work, where these individual values are determined as described in paragraph (e) of this section. You may also use this approach for laboratory testing, consistent with good engineering judgment. This is a special case in which you use a signal linearly proportional to raw exhaust molar flow rate to determine a value proportional to total emissions. You then use the same linearly proportional signal to determine total work using a chemical balance of fuel, intake air, and exhaust as described in §1065.655, plus information about your engine's brake-specific fuel consumption. Under this method, flow meters need not meet accuracy specifications, but they must meet the applicable linearity and repeatability specifications in subpart D or subpart J of this part. The result is a brake-specific emission value calculated as follows:

$$e = \frac{\tilde{m}}{\tilde{W}} \qquad \text{Eq. 1065.650-3}$$

Example:

$\tilde{m}$ = 805.5 ~ g
$\tilde{w}$ = 52.102 ~ kW·hr
e_{CO} = 805.5/52.102
e_{CO} = 2.520 g/(kW·hr)

(b) *Total mass of emissions.* To calculate the total mass of an emission, multiply a concentration by its respective flow. For all systems, make preliminary calculations as described in paragraph (b)(1) of this section, then use the method in paragraphs (b)(2) through (4) of this section that is appropriate for your system. Calculate the total mass of emissions as follows:

(1) *Concentration corrections.* Perform the following sequence of preliminary calculations on recorded concentrations:

(i) Correct all concentrations measured on a ''dry'' basis to a ''wet'' basis, including dilution air background concentrations, as described in §1065.659.

(ii) Calculate all HC concentrations, including dilution air background concentrations, as described in §1065.660.

(iii) For emission testing with an oxygenated fuel, calculate any HC concentrations, including dilution air background concentrations, as described in §1065.665. See subpart I of this part for testing with oxygenated fuels.

(iv) Correct the total mass of NO_X based on intake-air humidity as described in §1065.670.

(v) Calculate brake-specific emissions before and after correcting for drift, including dilution air background concentrations, according to §1065.672.

(2) *Continuous sampling.* For continuous sampling, you must frequently record a continuously updated concentration signal. You may measure this concentration from a changing flow rate or a constant flow rate (including discrete-mode steady-state testing), as follows:

(i) *Varying flow rate.* If you continuously sample from a changing exhaust flow rate, synchronously multiply it by the flow rate of the flow from which you extracted it. We consider the following to be examples of changing flows that require a continuous multiplication of concentration times molar flow rate: Raw exhaust, exhaust diluted with a constant flow rate of dilution air, and CVS dilution with a CVS flow meter that does not have an upstream heat exchanger or electronic flow control. Account for dispersion and time alignment as described in

§ 1065.201. This multiplication results in the flow rate of the emission itself. Integrate the emission flow rate over a test interval to determine the total emission. If the total emission is a molar quantity, convert this quantity to a mass by multiplying it by its molar mass, *M*. The result is the mass of the emission, *m*. Calculate *m* for continuous sampling with variable flow using the following equations:

$$m = M \cdot \sum_{i=1}^{N} x_i \cdot \dot{n}_i \cdot \Delta t \qquad \text{Eq. 1065.650-4}$$

Example:

M_{NMHC} = 13.875389 g/mol
N = 1200
x_{NMHC1} = 84.5 µmol/mol = 84.5 · 10^{-6} mol/mol
x_{NMHC2} = 86.0 µmol/mol = 86.0 · 10^{-6} mol/mol
$\dot{n}_{exh1}$ = 2.876 mol/s
$\dot{n}_{exh2}$ = 2.224 mol/s
f_{record} = 1 Hz
Using Eq. 1065.650−5,
Δt = 1/1 = 1 s
m_{NMHC} = 13.875389 · (84.5 · 10^{-6} · 2.876 + 86.0 · 10^{-6} ·2.224 + … + $x_{NMHC1200} \cdot \dot{n}_{exh}$) · 1
m_{NMHC} = 25.23 g

(ii) *Constant flow rate.* If you continuously sample from a constant exhaust flow rate, calculate the mean concentration recorded over the test interval and treat the mean as a batch sample, as described in paragraph (b)(3)(ii) of this section. We consider the following to be examples of constant exhaust flows: CVS diluted exhaust with a CVS flow meter that has either an upstream heat exchanger, electronic flow control, or both.

(3) *Batch sampling.* For batch sampling, the concentration is a single value from a proportionally extracted batch sample (such as a bag, filter, impinger, or cartridge). In this case, multiply the mean concentration of the batch sample by the total flow from which the sample was extracted. You may calculate total flow by integrating a changing flow rate or by determining the mean of a constant flow rate, as follows:

(i) *Varying flow rate.* If you collect a batch sample from a changing exhaust flow rate, extract a sample proportional to the changing exhaust flow rate. We consider the following to be examples of changing flows that require proportional sampling: Raw exhaust, exhaust diluted with a constant flow rate of dilution air, and CVS dilution with a CVS flow meter that does not have an upstream heat exchanger or electronic flow control. Integrate the flow rate over a test interval to determine the total flow from which you extracted the proportional sample. Multiply the mean concentration of the batch sample by the total flow from which the sample was extracted. If the total emission is a molar quantity, convert this quantity to a mass by multiplying it by its molar mass, *M*. The result is the mass of the emission, *m*. In the case of PM emissions, where the mean PM concentration is already in units of mass per mole of sample, M_{PM}, simply multiply it by the total flow. The result is the total mass of PM, m_{PM}. Calculate *m* for batch sampling with variable flow using the following equation:

$$m = M \cdot \bar{x} \cdot \sum_{i=1}^{N} \dot{n}_i \cdot \Delta t \qquad \text{Eq. 1065.650-6}$$

Example:

M_{NOx} = 46.0055 g/mol
N = 9000
$\bar{x}_{NOx}$ = 85.6 µmol/mol = 85.6 · 10^{-6} mol/mol
$\dot{n}_{dexhl}$ = 25.534 mol/s
$\dot{n}_{dexh2}$ = 26.950 mol/s
f_{record} = 5 Hz
Using Eq. 1065.650–5,
Δt = 1/5 = 0.2
m_{NOx} = 46.0055 · 85.6 · 10^{-6} · (25.534 + 26.950 + … + $\dot{n}_{exh9000}$) · 0.2
m_{NOx} = 4.201 g

(ii) *Constant flow rate.* If you batch sample from a constant exhaust flow rate, extract a sample at a constant flow rate. We consider the following to be examples of constant exhaust flows: CVS diluted exhaust with a CVS flow meter that has either an upstream heat exchanger, electronic flow control, or both. Determine the mean molar flow rate from which you extracted the constant flow rate sample. Multiply the mean concentration of the batch sample by the mean molar flow rate of the exhaust from which the sample was extracted, and multiply the result by the time of the test interval. If the total emission is a molar quantity, convert this quantity to a mass by multiplying it by its molar mass, *M*. The result is the mass of the emission, *m*. In the case

of PM emissions, where the mean PM concentration is already in units of mass per mole of sample $\bar{M}_{PM}$, simply multiply it by the total flow, and the result is the total mass of PM, m_{PM}, Calculate m for sampling with constant flow using the following equations:

$$m = M \cdot \bar{x} \cdot \bar{\dot{n}} \cdot \Delta t \qquad \text{Eq. 1065.650-7}$$

and for PM or any other analysis of a batch sample that yields a mass per mole of sample,

$$\bar{M} = M \cdot \bar{x} \qquad \text{Eq. 1065.650-8}$$

Example:

$\bar{M}_{PM}$ = 144.0 μg/mol = 144.0 · 10^{-6} g/mol
$\bar{\dot{n}}_{dexh}$ = 57.692 mol/s
Δt = 1200 s
m_{PM} = 144.0 · 10^{-6} · 57.692 · 1200
m_{PM} = 9.9692 g

(4) *Additional provisions for diluted exhaust sampling; continuous or batch.* The following additional provisions apply for sampling emissions from diluted exhaust:

(i) For sampling with a constant dilution ratio (*DR*) of air flow versus exhaust flow (e.g., secondary dilution for PM sampling), calculate m using the following equation:

$$m = m_{dil} \cdot (DR + 1) \qquad \text{Eq. 1065.650-9}$$

Example:

m_{PMdil} = 6.853 g
DR = 5:1
m_{PM} = 6.853 · (5 + 1)
m_{PM} = 41.118 g

(ii) For continuous or batch sampling, you may measure background emissions in the dilution air. You may then subtract the measured background emissions, as described in § 1065.667.

(c) *Total work.* To calculate total work, multiply the feedback engine speed by its respective feedback torque. Integrate the resulting value for power over a test interval. Calculate total work as follows:

$$W = \sum_{i=1}^{N} P_i \cdot \Delta t \qquad \text{Eq. 1065.650-10}$$

$$P_i = f_{ni} \cdot T_i \qquad \text{Eq. 1065.650-11}$$

Example:

N = 9000
f_{n1} = 1800.2 rev/min
f_{n2} = 1805.8 rev/min
T_1 = 177.23 N·m
T_2 = 175.00 N·m
C_{rev} = 2 · π rad/rev
C_{t1} = 60 s/min
C_p = 1000 (N·m)/kW
f_{record} = 5 Hz
C_{t2} = 3600 s/hr

$$P_1 = \frac{1800.2 \cdot 177.23 \cdot 2 \cdot 3.14159}{60 \cdot 1000}$$

P_1 = 33.41 kW
P_2 = 33.09 kW
Using Eq. 1065.650–5,
Δt = 1/5 = 0.2 s

$$W = \frac{(33.41 + 33.09 + \ldots + P_{9000}) \cdot 0.2}{3600}$$

W = 16.875 kW·hr

(d) *Steady-state mass rate divided by power.* To determine steady-state brake-specific emissions for a test interval as described in paragraph (a)(2) of this section, calculate the mean steady-state mass rate of the emission, $\bar{\dot{m}}$, and the mean steady-state power, $\bar{P}$, as follows:

(1) To calculate, $\bar{\dot{m}}$, multiply its mean concentration, $\bar{x}$, by its corresponding mean molar flow rate, $\bar{\dot{n}}$. If the result is a molar flow rate, convert this quantity to a mass rate by multiplying it by its molar mass, M. The result is the mean mass rate of the emission, $\dot{m}_{PM}$. In the case of PM emissions, where the mean PM concentration is already in units of mass per mole of sample, $\bar{M}_{PM}$, simply multiply it by the mean molar flow rate, $\bar{\dot{n}}$. The result is the mass rate of PM, $\dot{m}_{PM}$. Calculate $\bar{\dot{m}}$ using the following equation:

$$\bar{\dot{m}} = M \cdot \bar{x} \cdot \bar{\dot{n}} \qquad \text{Eq. 1065.650-12}$$

(2) Calculate $\bar{P}$ using the following equation:

$$\bar{P} = \bar{f}_n \cdot \bar{T} \qquad \text{Eq. 1065.650-13}$$

(3) *Ratio of mass and work.* Divide emission mass rate by power to calculate a brake-specific emission result as described in paragraph (a)(2) of this section.

(4) *Example.* The following example shows how to calculate mass of emissions using mean mass rate and mean power:

M_{CO} = 28.0101 g/mol

$\bar{x}_{CO}$ = 12.00 mmol/mol = 0.01200 mol/mol
$\bar{\dot{n}}$ = 1.530 mol/s
$\bar{f}_n$ = 3584.5 rev/min = 375.37 rad/s
$\bar{T}$ = 121.50 N·m
$\bar{\dot{m}}$ = 28.0101·0.01200·1.530
$\bar{\dot{m}}$ = 0.514 g/s
$\bar{P}$ = 121.5·375.37
$\bar{P}$ = 45607 W = 45.607 kW
e_{CO} = 0.514/45.61
e_{CO} = 0.0113 g/(kW·hr)

(e) *Ratio of total mass of emissions to total work.* To determine brake-specific emissions for a test interval as described in paragraph (a)(3) of this section, calculate a value proportional to the total mass of each emission. Divide each proportional value by a value that is similarly proportional to total work.

(1) *Total mass.* To determine a value proportional to the total mass of an emission, determine total mass as described in paragraph (b) of this section, except substitute for the molar flow rate, $\dot{n}$, or the total flow, n, with a signal that is linearly proportional to molar flow rate, $\tilde{\dot{n}}$, or linearly proportional to total flow, $\tilde{n}$, as follows:

$$\tilde{\dot{m}}_{fueli} = \frac{1}{w_{fuel}} \cdot \frac{M_C \cdot \tilde{\dot{n}}_i \cdot x_{Cproddryi}}{1 + x_{H2Oi}} \qquad \text{Eq. 1065.650-14}$$

(2) *Total work.* To calculate a value proportional to total work over a test interval, integrate a value that is proportional to power. Use information about the brake-specific fuel consumption of your engine, e_{fuel}, to convert a signal proportional to fuel flow rate to a signal proportional to power. To determine a signal proportional to fuel flow rate, divide a signal that is proportional to the mass rate of carbon products by the fraction of carbon in your fuel, w_c. For your fuel, you may use a measured w_c or you may use the default values in Table 1 of §1065.655. Calculate the mass rate of carbon from the amount of carbon and water in the exhaust, which you determine with a chemical balance of fuel, intake air, and exhaust as described in §1065.655. In the chemical balance, you must use concentrations from the flow that generated the signal proportional to molar flow rate, $\tilde{\dot{n}}$, in paragraph (e)(1) of this section. Calculate a value proportional to total work as follows:

$$\tilde{W} = \sum_{i=1}^{N} \tilde{P}_i \cdot \Delta t \qquad \text{Eq. 1065.650-15}$$

Where:

$$\tilde{P}_i = \frac{\tilde{\dot{m}}_{fueli}}{e_{fuel}} \qquad \text{Eq. 1065.650-16}$$

(3) Divide the value proportional to total mass by the value proportional to total work to determine brake-specific emissions, as described in paragraph (a)(3) of this section.

(4) The following example shows how to calculate mass of emissions using proportional values:

N = 3000
f_{record} = 5 Hz
e_{fuel} = 285 g/(kW·hr)
w_{fuel} = 0.869 g/g
M_c = 12.0107 g/mol
$\dot{n}_1$ = 3.922 ~mol/s = 14119.2 mol/hr
$x_{Cproddry1}$ = 91.634 mmol/mol = 0.091634 mol/mol
x_{H2O1} = 27.21 mmol/mol = 0.02721 mol/mol
Using 1065.650–5,
Δt = 0.2 s

$$\tilde{W} = \frac{12.0107 \cdot \left[\frac{3.922 \cdot 0.091634}{1 + 0.02721} + \frac{\tilde{\dot{n}}_2 \cdot x_{Cproddry2}}{1 + x_{H202}} + \ldots + \frac{\tilde{\dot{n}}_{3000} \cdot x_{Cpdry3000}}{1 + x_{H2On3000}} \right] \cdot 0.2}{285 \cdot 0.869}$$

$\tilde{W} = 5.09 \sim (kW \cdot hr)$

(f) *Rounding.* Round emission values only after all calculations are complete and the result is in g/(kW·hr) or units equivalent to the units of the standard, such as g/(hp·hr). See the definition of ''Round'' in § 1065.1001.

§ 1065.655 Chemical balances of fuel, intake air, and exhaust.

(a) *General.* Chemical balances of fuel, intake air, and exhaust may be used to calculate flows, the amount of water in their flows, and the wet concentration of constituents in their flows. With one flow rate of either fuel, intake air, or exhaust, you may use chemical balances to determine the flows of the other two. For example, you may use chemical balances along with either intake air or fuel flow to determine raw exhaust flow.

(b) *Procedures that require chemical balances.* We require chemical balances when you determine the following:

(1) A value proportional to total work, $\tilde{W}$, when you choose to determine brake-specific emissions as described in § 1065.650(e).

(2) The amount of water in a raw or diluted exhaust flow, x_{H2O}, when you do not measure the amount of water to correct for the amount of water removed by a sampling system. Correct for removed water according to § 1065.659(c)(2).

(3) The flow-weighted mean fraction of dilution air in diluted exhaust $\bar{x}_{dil}$, when you do not measure dilution air flow to correct for background emissions as described in § 1065.667(c). Note that if you use chemical balances for this purpose, you are assuming that your exhaust is stoichiometric, even if it is not.

(c) *Chemical balance procedure.* The calculations for a chemical balance involve a system of equations that require iteration. We recommend using a computer to solve this system of equations. You must guess the initial values of up to three quantities: the amount of water in the measured flow, x_{H2O}, fraction of dilution air in diluted exhaust, x_{dil}, and the amount of products on a C_1 basis per dry mole of dry measured flow, $x_{Cproddry}$. For each emission concentration, x, and amount of water x_{H2O}, you must determine their completely dry concentrations. x_{dry} and x_{H2Odry}. You must also use your fuel's atomic hydrogen-to-carbon ratio, α, and oxygen-to-carbon ratio, β. For your fuel, you may measure α and β or you may use the default values in Table 1 of § 1065.650. Use the following steps to complete a chemical balance:

(1) Convert your measured concentrations such as, $x_{CO2meas}$, x_{NOmeas}, and x_{H2Oint}, to dry concentrations by dividing them by one minus the amount of water present during their respective measurements; for example: $x_{H2OxCO2}$, x_{H2OxNO}, and x_{H2Oint}. If the amount of water present during a ''wet'' measurement is the same as the unknown amount of water in the exhaust flow, x_{H2O}, iteratively solve for that value in the system of equations. If you measure only total NO_X and not NO and NO_2 separately, use good engineering judgement to estimate a split in your total NO_X concentration between NO and NO_2 for the chemical balances. For example, if you measure emissions from a stoichiometric spark-ignition engine, you may assume all NO_X is NO. For a compression-ignition engine, you may assume that your molar concentration of NO_X, x_{NOX}, is 75% NO and 25% NO_2 For NO_2 storage aftertreatment systems, you may assume x_{NOX} is 25% NO and 75% NO_2. Note that for calculating the mass of NO_X emissions, you must use the molar mass of NO_2 for the effective molar mass of all NO_X species, regardless of the actual NO_2 fraction of NO_X.

(2) Enter the equations in paragraph (c)(4) of this section into a computer program to iteratively solve for x_{H2O} and $x_{Cproddry}$. If you measure raw exhaust flow, set x_{dil} equal to zero. If you measure diluted exhaust flow, iteratively solve for x_{dil}. Use good engineering judgment to guess initial values for x_{H2O}, $x_{Cproddry}$, and x_{dil}. We recommend guessing an initial amount of water that is about twice the amount of water in your intake or dilution air. We recommend guessing an initial value of $x_{Cproddry}$ as the sum of your measured CO_2, CO, and THC values. If you measure diluted exhaust, we also recommend guessing an initial x_{dil} between 0.75 and 0.95, such as 0.8. Iterate values in the system of equations until the most recently updated guesses are

all within ±1% of their respective most recently calculated values.

(3) Use the following symbols and subscripts in the equations for this paragraph (c):

x_{H2O} = Amount of water in measured flow.

x_{H2Odry} = Amount of water per dry mole of measured flow.

$x_{Cproddry}$ = Amount of carbon products on a C_1 basis per dry mole of measured flow.

x_{dil} = Fraction of dilution air in measured flow, assuming stoichiometric exhaust; or x_{dil} = excess air for raw exhaust.

$x_{prod/intdry}$ = Amount of dry stoichiometric products per dry mole of intake air.

$x_{O2proddry}$ = Amount of oxygen products on an O_2 basis per dry mole of measured flow.

$x_{[emission]dry}$ = Amount of emission per dry mole of measured flow.

$x_{[emission]meas}$ = Amount of emission in measured flow.

$x_{H2O[emission]meas}$ = Amount of water at emission-detection location. Measure or estimate these values according to § 1065.145(d)(2).

x_{H2Oint} = Amount of water in the intake air, based on a humidity measurement of intake air.

x_{H2Odil} = Amount of water in dilution air, based on a humidity measurement of intake air.

$x_{O2airdry}$ = Amount of oxygen per dry mole of air. Use $x_{O2airdry}$= 0.209445 mol/mol.

$x_{CO2airdry}$ = Amount of carbon dioxide per dry mole of air. Use $x_{CO2airdry}$ = 375 μmol/mol.

α = Atomic hydrogen-to-carbon ratio in fuel.

β = Atomic oxygen-to-carbon ratio in fuel.

(4) Use the following equations to iteratively solve for x_{H2O} and $x_{Cproddry}$:

$$x_{H2O} = \frac{x_{H2Odry}}{1 + x_{H2Odry}} \qquad \text{Eq. 1065.655-1}$$

$$x_{H2Odry} = \frac{\alpha}{2} \cdot x_{Cproddry} + \left(1 - x_{dil}\right) \cdot \frac{x_{H2Ointdry}}{x_{prod/intdry}} + x_{dil} \cdot x_{H2Odildry} \qquad \text{Eq. 1065.655-2}$$

$$x_{Cproddry} = x_{CO2dry} + x_{COdry} + x_{THCdry} \qquad \text{Eq. 1065.655-3}$$

$$x_{dil} = 1 - \frac{x_{O2proddry} \cdot x_{prod/intdry}}{x_{O2airdry}} \cdot \left(1 + x_{H2Ointdry}\right) \qquad \text{Eq. 1065.655-4}$$

$$x_{prod/intdry} = \frac{1}{1 - \frac{1}{1 - x_{dil}} \cdot \frac{1}{2} \cdot \left(x_{COdry} - \frac{\alpha}{2} \cdot x_{Cproddry} - x_{NO2dry}\right)} \qquad \text{Eq. 1065.655-5}$$

$$x_{O2proddry} = x_{CO2dry} + \frac{1}{2} \cdot \left(x_{COdry} + \frac{\alpha}{2} \cdot x_{Cproddry} + x_{NOdry}\right) + x_{NO2dry} - \beta \cdot x_{Cproddry} \qquad \text{Eq. 1065.655-6}$$

$$x_{CO2dry} = \frac{x_{CO2meas}}{1 - x_{H2OCO2meas}} - \frac{x_{CO2airdry}}{1 - \frac{1}{2} \cdot \left(x_{COdry} - \frac{\alpha}{2} \cdot x_{Cproddry} - x_{NO2dry}\right)} \qquad \text{Eq. 1065.655-7}$$

$$x_{COdry} = \frac{x_{COmeas}}{1 - x_{H2OxCOmeas}} \qquad \text{Eq. 1065.655-8}$$

$$x_{THCdry} = \frac{x_{THCmeas}}{1 - x_{H2OxTHCmeas}} \qquad \text{Eq. 1065.655-9}$$

$$x_{H2Ointdry} = \frac{x_{H2Oint}}{1 - x_{H2Oint}} \qquad \text{Eq. 1065.655-10}$$

$$x_{H2Odildry} = \frac{x_{H2Odil}}{1 - x_{H2Odil}} \qquad \text{Eq. 1065.655-11}$$

$$x_{NO2dry} = \frac{x_{NO2meas}}{1 - x_{H2OxNO2meas}} \qquad \text{Eq. 1065.655-12}$$

$$x_{NOdry} = \frac{x_{NOmeas}}{1 - x_{H2OxNOmeas}} \qquad \text{Eq. 1065.655-13}$$

(5) The following example is a solution for x_{H2O} and $x_{Cproddry}$ using the equations in paragraph (c)(4) of this section:

$$x_{H2O} = \frac{35.24}{1 + \frac{35.24}{1000}} = 34.04 \text{ mmol/mol}$$

$$x_{H2Odry} = \frac{1.8}{2} \cdot 24.69 + (1 - 0.843) \cdot \frac{17.22}{0.9338} + 0.843 \cdot 12.01 = 35.24 \text{ mmol/mol}$$

$$x_{Cproddry} = 24.614 + \frac{29.3}{1000} + \frac{47.6}{1000} = 24.69 \text{ mmol/mol}$$

$$x_{dil} = 1 - \frac{\frac{34.54}{1000} \cdot 0.9338}{0.209445} \cdot \left(1 + \frac{17.22}{1000}\right) = 0.843$$

$$x_{prod/intdry} = \frac{1}{1 - \frac{1}{1 - 0.843} \cdot \frac{1}{2} \cdot \left(\frac{29.3}{1000000} - \frac{1.8}{2} \cdot \frac{24.69}{1000} - \frac{12.1}{1000000}\right)} = 0.9338 \text{ mol/mol}$$

$$x_{O2prod/intdry} = 24.614 + \frac{1}{2} \cdot \left(\frac{29.3}{1000} + \frac{1.8}{2} \cdot 24.69 + \frac{50.4}{1000}\right) + \frac{12.1}{1000} - 0.05 \cdot 24.69 = 34.54 \text{ mol/mol}$$

$$x_{CO2dry} = \frac{24.770}{1 - \frac{8.601}{1000}} - \frac{\frac{375}{1000}}{1 - \frac{1}{2} \cdot \left(\frac{29.3}{1000000} - \frac{1.8}{2} \cdot \frac{24.69}{1000} - \frac{12.1}{1000000}\right)} = 24.614 \text{ mmol/mol}$$

$$x_{CO2meas} = \frac{392}{1 - \frac{8.601}{1000}} = 399.9 \text{ mmol/mol} \qquad x_{H2Omeas} = \frac{18.52}{1 - \frac{8.601}{1000}} = 17.22 \text{ mmol/mol} \qquad x_{Cmeas} = \frac{12.0}{1 - \frac{8.601}{1000}} = 12.1 \text{ mmol/mol}$$

$$x_{NOmeas} = \frac{48}{1 - 0.101} = 47.6 \text{ mmol/mol} \qquad x_{NOxmeas} = \frac{113.7}{1 - 0.101} = 113.6 \text{ mmol/mol} \qquad x_{H2Omeas} = \frac{30.0}{1 - \frac{8.601}{1000}} = 30.6 \text{ mmol/mol}$$

$$x_{NO2meas} = 113.6 - 47.6 = 66.0 \text{ mmol/mol}$$

$$x_{H2OxNO2meas} = 0.1 \text{ mol/mol}$$

$$x_{H2OxNOmeas} = 0.1 \text{ mol/mol}$$

TABLE 1 OF § 1065.655—DEFAULT VALUES OF ATOMIC HYDROGEN-TO-CARBON RATIO, α, ATOMIC OXYGEN-TO-CARBON RATIO, β AND CARBON MASS FRACTION OF FUEL, W_C, FOR VARIOUS FUELS

Fuel	Atomic hydrogen and oxygen-to-carbon ratios $CH\alpha\ O\beta$	Carbon mass concentration, W_C g/g
Gasoline	$CH_{1.85}O_0$	0.866
#2 Diesel	$CH_{1.80}O_0$	0.869
#1 Diesel	$CH_{1.93}O_0$	0.861
Liquified Petroleum Gas	$CH_{2.64}O_0$	0.819
Natural gas	$CH_{3.78}O_{0.016}$	0.747
Ethanol	$CH_3O_{0.5}$	0.521
Methanol	CH_4O_1	0.375

(d) *Calculated raw exhaust molar flow rate from measured intake air molar flow rate or fuel mass flow rate.* You may calculate the raw exhaust molar flow rate from which you sampled emissions, $\dot{n}_{exh}$, based on the measured intake air molar flow rate, $\dot{n}_{int}$, or the measured fuel mass flow rate, $\dot{m}_{fuel}$, and the values calculated using the chemical balance in paragraph (c) of this section. Solve for the chemical balance in paragraph (c) of this section at the same frequency that you update and record $\dot{n}_{int}$ or $\dot{m}_{fuel}$.

(1) *Crankcase flow rate.* You may calculate raw exhaust flow based on $\dot{n}_{int}$ or $\dot{m}_{fuel}$ only if at least one of the following is true about your crankcase emission flow rate:

(i) Your test engine has a production emission-control system with a closed crankcase that routes crankcase flow back to the intake air, downstream of your intake air flow meter.

(ii) During emission testing you route open crankcase flow to the exhaust according to § 1065.130(g).

(iii) You measure open crankcase emissions and flow, and you add the masses of crankcase emissions to your brake-specific emission calculations.

(iv) Using emission data or an engineering analysis, you can show that neglecting the flow rate of open crankcase emissions does not adversely affect your ability to demonstrate compliance with the applicable standards.

(2) *Intake air molar flow rate calculation.* Based on $\dot{n}_{int}$, calculate $\dot{n}_{exh}$ as follows:

$$\dot{n}_{exh} = \left[\dot{n}_{int} \cdot \left(1 - x_{H20\,int}\right) \cdot x_{prod/intdry} \cdot \left(1 + x_{H20dry}\right)\right] \cdot \left[1 + \frac{x_{dil}}{1 - x_{dil}}\right] \qquad \text{Eq. } 1065.655-14$$

Where:

$\dot{n}_{exh}$= raw exhaust molar flow rate from which you measured emissions.

$\dot{n}_{int}$ =intake air molar flow rate including humidity in intake air.

Example:

$\dot{n}_{int}$= 3.780 mol/s

x_{H20int} = 16.930 mmol/mol = 0.016930 mol/mol

$x_{prod/intdry}$ = 0.93382 mol/mol

x_{H20dry} = 130.16 mmol/mol = 0.13016 mol/mol

x_{dil} = 0.20278 mol/mol

$$\dot{n}_{exh} = \left[3.780 \cdot (1 - 0.016930) \cdot 0.93382 \cdot (1 + 0.13016)\right] \cdot \left[1 + \frac{0.20278}{1 - 0.20278}\right]$$

$\dot{n}_{exh}$ = 4.919 mol/s

(3) *Fuel mass flow rate calculation.* Based on $\dot{m}_{fuel}$, calculate $\dot{n}_{exh}$ as follows:

$$\dot{n}_{exh} = \frac{\dot{m}_{fuel} \cdot w_c}{M_c \cdot x_{Cproddry}} \cdot \left(1 + x_{H2Odry}\right) \cdot \left[1 + \frac{x_{dil}}{1 - x_{dil}}\right] \qquad \text{Eq. } 1065.655-15$$

Where:

$\dot{n}_{exh}$= raw exhaust molar flow rate from which you measured emissions.

$\dot{m}_{fuel}$= intake air molar flow rate including humidity in intake air.

Example:

$\dot{m}_{fuel}$= 6.023 g/s

w_C = 0.869 g/g

M_C = 12.0107 g/mol

$x_{Cproddry}$ = 125.58 mmol/mol = 0.12558 mol/mol

x_{H20dry} = 130.16 mmol/mol = 0.13016 mol/mol

x_{dil} = 0.20278 mol/mol

$$\dot{n}_{exh} = \frac{6.0233 \cdot 0.869}{12.0107 \cdot 0.12558} \cdot (1 + 0.13016) \cdot \left[1 + \frac{0.20278}{1 - 0.20278}\right]$$

$\dot{n}_{exh}$ = 4.919 mol/s

§ 1065.659 Removed water correction.

(a) If you remove water upstream of a concentration measurement, *x*, or upstream of a flow measurement, *n*, correct for the removed water. Perform this correction based on the amount of water at the concentration measurement, $x_{H2O[emission]meas}$, and at the flow meter, x_{H2O}, whose flow is used to determine the concentration's total mass over a test interval.

(b) Downstream of where you removed water, you may determine the amount of water remaining by any of the following:

(1) Measure the dewpoint and absolute pressure downstream of the water removal location and calculate the amount of water remaining as described in § 1065.645.

(2) When saturated water vapor conditions exist at a given location, you may use the measured temperature at that location as the dewpoint for the downstream flow. If we ask, you must demonstrate how you know that saturated water vapor conditions exist. Use good engineering judgment to measure the temperature at the appropriate location to accurately reflect the dewpoint of the flow.

(3) You may also use a nominal value of absolute pressure based on an alarm setpoint, a pressure regulator setpoint, or good engineering judgment.

(c) For a corresponding concentration or flow measurement where you did not remove water, you may determine the amount of initial water by any of the following:

(1) Use any of the techniques described in paragraph (b) of this section.

(2) If the measurement comes from raw exhaust, you may determine the amount of water based on intake-air humidity, plus a chemical balance of fuel, intake air and exhaust as described in § 1065.655.

(3) If the measurement comes from diluted exhaust, you may determine the amount of water based on intake-air humidity, dilution air humidity, and a chemical balance of fuel, intake air, and exhaust as described in § 1065.655.

(d) Perform a removed water correction to the concentration measurement using the following equation:

$$x = x_{[emission]meas} \cdot \left[\frac{1 - x_{H2O}}{1 - x_{H2O[emission]meas}} \right] \qquad \text{Eq. 1065.659-1}$$

Example:

x_{COmeas} = 29.0 µmol/mol

$x_{H2OxCOmeas}$ = 8.601 mmol/mol = 0.008601 mol/mol

x_{H2O} = 34.04 mmol/mol = 0.03404 mol/mol

$$x_{CO} = 29.0 \cdot \left[\frac{1 - 0.03404}{1 - 0.008601} \right]$$

x_{CO} = 28.3 µmol/mol

§ 1065.660 THC and NMHC determination.

(a) *THC determination.* If we require you to determine THC emissions, calculate x_{THC} using the initial THC contamination concentration $x_{THCinit}$ from § 1065.520 as follows:

$$x_{THCcor} = x_{THCuncor} - x_{THCinit} \qquad \text{Eq. 1065.660-1}$$

Example:

$x_{THCuncor}$ = 150.3 µmol/mol

$x_{THCinit}$ = 1.1 µmol/mol

x_{THCcor} = 150.3 − 1.1

x_{THCcor} = 149.2 µmol/mol

(b) *NMHC determination.* Use one of the following to determine NMHC emissions, x_{NMHC}.

(1) Report x_{NMHC} as 0.98 · x_{THC} if you did not measure CH_4, or if the result of paragraph (b)(2) or (3) of this section is greater than the result using this paragraph (b)(1).

(2) For nonmethane cutters, calculate x_{NMHC} using the nonmethane cutter's penetration fractions (*PF*) of CH_4 and C_2H_6 from § 1065.365, and using the initial NMHC contamination concentration $x_{NMHCinit}$ from § 1065.520 as follows:

$$x_{NMHC} = \frac{PF_{CH4} \cdot x_{THC} - RF_{CH4} \cdot x_{CH4}}{PF_{CH4} - PF_{C2H6}} - x_{NMHCinit} \qquad \text{Eq. 1065.660-2}$$

Where:

x_{NMHC} = concentration of NMHC.

PF_{CH4} = nonmethane cutter CH_4 penetration fraction, according to § 1065.365.

x_{THC} = concentration of THC, as measured by the THC FID.

RF_{CH4} = response factor of THC FID to CH_4, according to § 1065.360.

x_{CH4} = concentration of methane, as measured downstream of the nonmethane cutter.

PF_{C2H6} = nonmethane cutter CH_4 penetration fraction, according to § 1065.365.

$x_{NMHCinit}$ = initial NMHC contamination concentration, according to § 1065.520.

Example:

PF_{CH4} = 0.990

x_{THC} = 150.3 µmol/mol

RF_{CH4} = 1.05

x_{CH4} = 20.5 µmol/mol

PF_{C2H6} = 0.020

$x_{NMHCinit}$ = 1.1 µmol/mol

$$x_{NMHC} = \frac{0.990 \cdot 150.3 - 1.05 \cdot 20.5}{0.990 - 0.020} - 1.1$$

x_{NMHC} = 130.1 µmol/mol

(3) For a gas chromatograph, calculate x_{NMHC} using the THC analyzer's response factor (*RF*) for CH_4, from § 1065.360, and using the initial NMHC contamination concentration $x_{NMHCinit}$ from § 1065.520 as follows:

$$x_{NMHC} = x_{THC} - RF_{CH4} \cdot x_{CH4} - x_{NMHCinit} \qquad \text{Eq. 1065.660-3}$$

Example:

x_{THC} = 145.6 µmol/mol
RF_{CH4} = 0.970
x_{CH4} = 18.9 µmol/mol
$x_{NMHCinit}$ = 1.1 µmol/mol
x_{NMHC} = 145.6 − 0.970 · 18.9 − 1.1
x_{NMHC} = 126.2 µmol/mol

§ 1065.665 THCE and NMHCE determination.

(a) If you measured an oxygenated hydrocarbon's mass concentration (per mole of exhaust), first calculate its molar concentration by dividing its mass concentration by the effective molar mass of the oxygenated hydrocarbon, then multiply each oxygenated hydrocarbon's molar concentration by its respective number of carbon atoms per molecule. Add these C_1-equivalent molar concentrations to the molar concentration of NOTHC. The result is the molar concentration of THCE. Calculate THCE concentration using the following equations:

$$x_{THCE} = x_{NOTHC} + \sum_{i=1}^{N} x_{OHC_i} - x_{THCEinit} \qquad \text{Eq. 1065.665-1}$$

$$x_{NOTHC} = x_{THC} - \sum_{i=1}^{N} \left(x_{OHCi} \cdot RF_{OHCi} \cdot C^{\#} \right) \qquad \text{Eq. 1065.665-2}$$

$$x_{OHCi} = \frac{M_{exhOHCi} \cdot m_{dexhOHC}}{M_{OHCi} \cdot m_{dexh}} = \frac{n_{dexhOHC}}{n_{dexh}} \qquad \text{Eq. 1065.665-3}$$

Where:

x_{OHCi} = The C_1-equivalent concentration of oxygenated species *i* in diluted exhaust.
x_{THC} = The C_1-equivalent FID response to NOTHC and all OHC in diluted exhaust.
RF_{OHCi} = The response factor of the FID to species *i* relative to propane on a C_1-equivalent basis.
$C^{\#}$ = the mean number of carbon atoms in the particular compound.

(b) If we require you to determine NMHCE, use the following equation:

$$x_{NMHCE} = x_{THCE} - x_{CH4} \cdot RF_{CH4} \qquad \text{Eq. 1065.665-4}$$

(c) The following example shows how to determine NMHCE emissions based on ethanol (C_2H_5OH) and methanol (CH_3OH) molar concentrations, and acetaldehyde (C_2H_4O) and formaldehyde (HCHO) as mass concentrations:

x_{NMHC} = 127.3 µmol/mol
x_{C2H5OH} = 100.8 µmol/mol
x_{CH3OH} = 25.5 µmol/mol
$M_{exhC2H4O}$ = 0.841 mg/mol
$M_{exhHCHO}$ = 39.0 µg/mol
M_{C2H4O} = 44.05256 g/mol
M_{HCHO} = 30.02598 g/mol
x_{C2H4O} = 0.841/44.05256 1000
x_{C2H4O} = 19.1 µmol/mol
x_{HCHO} = 39/30.02598
x_{HCHO} = 1.3 µmol/mol
x_{NMHCE} = 127.3 + 2 100.8 + 25.5 + 2 19.1 + 1.3
x_{NMHCE} = 393.9 µmol/mol

§ 1065.667 Dilution air background emission correction.

(a) To determine the mass of background emissions to subtract from a diluted exhaust sample, first determine the total flow of dilution air, n_{dil}, over the test interval. This may be a measured quantity or a quantity calculated from the diluted exhaust flow and the

flow-weighted mean fraction of dilution air in diluted exhaust, $\bar{x}_{dil}$. Multiply the total flow of dilution air by the mean concentration of a background emission. This may be a time-weighted mean or a flow-weighted mean (e.g., a proportionally sampled background). The product of n_{dil} and the mean concentration of a background emission is the total amount of a background emission. If this is a molar quantity, convert it to a mass by multiplying it by its molar mass, M. The result is the mass of the background emission, m. In the case of PM, where the mean PM concentration is already in units of mass per mole of sample, M_{PM}, multiply it by the total amount of dilution air, and the result is the total background mass of PM, m_{PM}. Subtract total background masses from total mass to correct for background emissions.

(b) You may determine the total flow of dilution air by a direct flow measurement. In this case, calculate the total mass of background as described in §1065.650(b), using the dilution air flow, n_{dil} . Subtract the background mass from the total mass. Use the result in brake-specific emission calculations.

(c) You may determine the total flow of dilution air from the total flow of diluted exhaust and a chemical balance of the fuel, intake air, and exhaust as described in §1065.655. In this case, calculate the total mass of background as described in §1065.650(b), using the total flow of diluted exhaust, n_{dexh}, then multiply this result by the flow-weighted mean fraction of dilution air in diluted exhaust, $\bar{x}_{dil}$. Calculate $\bar{x}_{dil}$ using flow-weighted mean concentrations of emissions in the chemical balance, as described in §1065.655. You may assume that your engine operates stoichiometrically, even if it is a lean-burn engine, such as a compression-ignition engine. Note that for lean-burn engines this assumption could result in an error in emission calculations. This error could occur because the chemical balances in §1065.655 correct excess air passing through a lean-burn engine as if it was dilution air. If an emission concentration expected at the standard is about 100 times its dilution air background concentration, this error is negligible. However, if an emission concentration expected at the standard is similar to its background concentration, this error could be significant. If this error might affect your ability to show that your engines comply with applicable standards, we recommend that you remove background emissions from dilution air by HEPA filtration, chemical adsorption, or catalytic scrubbing. You might also consider using a partial-flow dilution technique such as a bag mini-diluter, which uses purified air as the dilution air.

(d) The following is an example of using the flow-weighted mean fraction of dilution air in diluted exhaust, $\bar{x}_{dil}$, and the total mass of background emissions calculated using the total flow of diluted exhaust, n_{dexh}, as described in §1065.650(b) :

$$m_{bkgnd} = \bar{x}_{dil} \cdot m_{bkgnddexh} \qquad \text{Eq. 1065.667-1}$$

$$m_{bkgnddexh} = M \cdot \bar{x}_{bkgnd} \cdot n_{dexh} \qquad \text{Eq. 1065.667-2}$$

Example:

M_{NOx} = 46.0055 g/mol
$\bar{x}_{bkgnd}$ = 0.05 µmol/mol = $0.05 \cdot 10^{-6}$ mol/mol
n_{dexh} = 23280.5 mol
$\bar{x}_{dil}$ = 0.843
$m_{bkgndNOxdexh} = 46.0055 \cdot 0.05 \cdot 10^{-6} \cdot 23280.5$
$m_{bkgndNOxdexh}$ = 0.0536 g
$m_{bkgndNOx} = 0.843 \cdot 0.0536$
$m_{bkgndNOx}$ = 0.0452 g

§1065.670 NO_X intake-air humidity and temperature corrections.

See the standard-setting part to determine if you may correct NO_X emissions for the effects of intake-air humidity or temperature. Use the NO_X intake-air humidity and temperature

corrections specified in the standard-setting part instead of the NO_X intake-air humidity correction specified in this part 1065. If the standard-setting part allows correcting NO_X emissions for intake-air humidity according to this part 1065, first apply any NO_X corrections for background emissions and water removal from the exhaust sample, then correct NO_X concentrations for intake-air humidity using one of the following approaches:

(a) Correct for intake-air humidity using the following equation:

$$x_{NOxcor} = x_{NOxuncor} \cdot (9.953 \cdot x_{H2O} + 0.832) \qquad \text{Eq. 1065.670-1}$$

Example:

$x_{NOxuncor}$ = 700.5 μmol/mol
x_{H2O} = 0.022 mol/mol
x_{NOxcor} = 700.5 · (9.953 · 0.022 + 0.832)
x_{NOxcor} = 736.2 μmol/mol

(b) Develop your own correction, based on good engineering judgment.

§ 1065.672 Drift correction.

(a) *Scope and frequency.* Perform the calculations in this section to determine if gas analyzer drift invalidates the results of a test interval. If drift does not invalidate the results of a test interval, correct that test interval's gas analyzer responses for drift according to this section. Use the drift-corrected gas analyzer responses in all subsequent emission calculations. Note that the acceptable threshold for gas analyzer drift over a test interval is specified in § 1065.550 for both laboratory testing and field testing.

(b) *Correction principles.* The calculations in this section utilize a gas analyzer's responses to reference zero and span concentrations of analytical gases, as determined sometime before and after a test interval. The calculations correct the gas analyzer's responses that were recorded during a test interval. The correction is based on an analyzer's mean responses to reference zero and span gases, and it is based on the reference concentrations of the zero and span gases themselves. Validate and correct for drift as follows:

(c) *Drift validation.* After applying all the other corrections—except drift correction—to all the gas analyzer signals, calculate brake-specific emissions according to § 1065.650. Then correct all gas analyzer signals for drift according to this section. Recalculate brake-specific emissions using all of the drift-corrected gas analyzer signals. Validate and report the brake-specific emission results before and after drift correction according to § 1065.550.

(d) *Drift correction.* Correct all gas analyzer signals as follows:

(1) Correct each recorded concentration, x_i, for continuous sampling or for batch sampling, $\bar{x}$.

(2) Correct for drift using the following equation:

$$x_{idrift\ corrected} = x_{refzero} + \frac{2 \cdot x_{refspan}}{x_{prespan} + x_{postspan}} \cdot \left(x_i - \frac{x_{prezero} + x_{postzero}}{2} \right) \qquad \text{Eq. 1065.672-1}$$

Where:

$x_{idriftcorrected}$ = concentration corrected for drift.

$x_{refzero}$ = reference concentration of the zero gas, which is usually zero unless known to be otherwise.

$x_{refspan}$ = reference concentration of the span gas.

$x_{prespan}$ = pre-test interval gas analyzer response to the span gas concentration.

$x_{postspan}$ = post-test interval gas analyzer response to the span gas concentration.

x_i or $\bar{x}$ = concentration recorded during test, before drift correction.

$x_{prezero}$ = pre-test interval gas analyzer response to the zero gas concentration.

$x_{postzero}$ = post-test interval gas analyzer response to the zero gas concentration.

Example:

$x_{refzero}$ = 0 μmol/mol

$x_{refspan}$ = 1800.0 μmol/mol
$x_{prespan}$ = 1800.5 μmol/mol
$x_{postspan}$ = 1695.8 μmol/mol
x_i or $\bar{x}$ = 435.5 μmol/mol
$x_{prezero}$ = 0.6 μmol/mol
$x_{postzero}$ = −5.2 μmol/mol

$$x_{idrift\ corrected} = 0 + \frac{2 \cdot 1800.0}{1800.5 + 1695.8} \cdot \left(435.5 - \frac{0.6 + (-5.2)}{2}\right)$$

$x_{idriftcorrected}$ = 450.8 μmol/mol

(3) For any pre-test interval concentrations, use concentrations determined most recently before the test interval. For some test intervals, the most recent pre-zero or pre-span might have occurred before one or more previous test intervals.

(4) For any post-test interval concentrations, use concentrations determined most recently after the test interval. For some test intervals, the most recent post-zero or post-span might have occurred after one or more subsequent test intervals.

(5) If you do not record any pre-test interval analyzer response to the span gas concentration, $x_{prespan}$, set $x_{prespan}$ equal to the reference concentration of the span gas:

$x_{prespan} = x_{refspan}$.

(6) If you do not record any pre-test interval analyzer response to the zero gas concentration, $x_{prezero}$, set $x_{prezero}$ equal to the reference concentration of the zero gas:

$x_{prezero} = x_{refzero}$.

(7) Usually the reference concentration of the zero gas, $x_{refzero}$, is zero: $x_{refzero}$ = 0 μmol/mol. However, in some cases you might you know that $x_{refzero}$ has a non-zero concentration. For example, if you zero a CO_2 analyzer using ambient air, you may use the default ambient air concentration of CO_2, which is 375 μmol/mol. In this case, $x_{refzero}$ = 375 μmol/mol. Note that when you zero an analyzer using a non-zero $x_{refzero}$, you must set the analyzer to output the actual $x_{refzero}$ concentration. For example, if $x_{refzero}$ = 375 μmol/mol, set the analyzer to output a value of 375 μmol/mol when the zero gas is flowing to the analyzer.

§ 1065.675 CLD quench verification calculations.

Perform CLD quench-check calculations as follows:

(a) Calculate the amount of water in the span gas, $x_{H2Ospan}$, assuming complete saturation at the span-gas temperature.

(b) Estimate the expected amount of water and CO_2 in the exhaust you sample, x_{H2Oexp} and x_{CO2exp}, respectively, by considering the maximum expected amounts of water in combustion air, fuel combustion products, and dilution air concentrations (if applicable).

(c) Calculate water quench as follows:

$$quench = \left(\frac{x_{NOwet}/\left(1 - x_{H2Omeas}\right)}{x_{NOdry}} - 1\right) \cdot \frac{x_{H2Oexp}}{x_{H2Omeas}} + \frac{x_{NO,CO2} - x_{NO,N2}}{x_{NO,N2}} \cdot \frac{x_{CO2exp}}{x_{CO2meas}} \qquad \text{Eq. 1065.672-1}$$

Where:

quench = amount of CLD quench.

x_{NOdry} = measured concentration of NO upstream of a bubbler, according to § 1065.370.

x_{NOwet} = measured concentration of NO downstream of a bubbler, according to § 1065.370.

x_{H2Oexp} = expected maximum amount of water entering the CLD sample port during emission testing.

$x_{H2Omeas}$ = measured amount of water entering the CLD sample port during the quench verification specified in § 1065.370.

$x_{NO,CO2}$ = measured concentration of NO when NO span gas is blended with CO_2 span gas, according to § 1065.370.

$x_{NO,N2}$ = measured concentration of NO when NO span gas is blended with N2 span gas, according to § 1065.370.

x_{CO2exp} = expected maximum amount of CO_2 entering the CLD sample port during emission testing.

$x_{CO2meas}$ = measured amount of CO_2 entering the CLD sample port during the quench verification specified in § 1065.370.

Example:

x_{NOdry} = 1800.0 µmol/mol
x_{NOwet} = 1760.5 µmol/mol
x_{H2Oexp} = 0.030 mol/mol
$x_{H2Omeas}$ = 0.017 mol/mol
$x_{NO,CO2}$ = 1480.2 µmol/mol
$x_{NO,N2}$ = 1500.8 µmol/mol
x_{CO2exp} = 2.00%
$x_{CO2meas}$ = 3.00%

$$quench = \left(\frac{1760.5/(1-0.017)}{1800.0} - 1 \right) \cdot \frac{0.030}{0.017} + \frac{1480.2-1500.8}{1500.8} \cdot \frac{2.00}{3.00}$$

$quench = -0.00888 - 0.00915 = -1.80\%$

§ 1065.690 Buoyancy correction for PM sample media.

(a) *General.* Correct PM sample media for their buoyancy in air if you weigh them on a balance. The buoyancy correction depends on the sample media density, the density of air, and the density of the calibration weight used to calibrate the balance. The buoyancy correction does not account for the buoyancy of the PM itself, because the mass of PM typically accounts for only (0.01 to 0.10)% of the total weight. A correction to this small fraction of mass would be at the most 0.010%.

(b) *PM sample media density.* Different PM sample media have different densities. Use the known density of your sample media, or use one of the densities for some common sampling media, as follows:

(1) For PTFE-coated borosilicate glass, use a sample media density of 2300 kg/m^3.

(2) For PTFE membrane (film) media with an integral support ring of polymethylpentene that accounts for 95% of the media mass, use a sample media density of 920 kg/m^3.

(3) For PTFE membrane (film) media with an integral support ring of PTFE, use a sample media density of 2144 kg/m^3.

(c) *Air density.* Because a PM balance environment must be tightly controlled to an ambient temperature of (22 ±1) °C and a dewpoint of (9.5 ±1) °C, air density is primarily function of atmospheric pressure. We therefore specify a buoyancy correction that is only a function of atmospheric pressure. Using good engineering judgment, you may develop and use your own buoyancy correction that includes the effects of temperature and dewpoint on density in addition to the effect of atmospheric pressure.

(d) *Calibration weight density.* Use the stated density of the material of your metal calibration weight. The example calculation in this section uses a density of 8000 kg/m^3, but you should know the density of your weight from the calibration weight supplier or the balance manufacturer if it is an internal weight.

(e) *Correction calculation.* Correct the PM sample media for buoyancy using the following equations:

$$m_{cor} = m_{uncor} \cdot \left(\frac{1 - \frac{\rho_{air}}{\rho_{weight}}}{1 - \frac{\rho_{air}}{\rho_{media}}} \right) \qquad \text{Eq. 1065.690-1}$$

Where:

m_{cor} = PM mass corrected for buoyancy.
m_{uncor} = PM mass uncorrected for buoyance.
ρ_{air} = density of air in balance environment.
ρ_{weight} = density of calibration weight used to span balance.
ρ_{media} = density of PM sample media, such as a filter.

$$\rho_{air} = \frac{\rho_{abs} \cdot M_{mix}}{R \cdot T_{amb}} \qquad \text{Eq. 1065.690-2}$$

Where:

ρ_{abs} = absolute pressure in balance environment.
M_{mix} = molar mass of air in balance environment.
R = molar gas constant.
T_{amb} = absolute ambient temperature of balance environment.

Example:

p_{abs} = 99.980 kPa
$T_{sat} = T_{dew}$ = 9.5 °C
Using Eq. 1065.645–2,
p_{H20} = 1.1866 kPa
Using Eq. 1065.645–3,
x_{H2O} = 0.011868 mol/mol
Using Eq. 1065.640–8,
M_{mix} = 28.83563 g/mol
R = 8.314472 J/(mol·K)
T_{amb} = 20 °C

$$\rho_{air} = \frac{99.980 \cdot 28.83563}{8.314472 \cdot 293.15}$$

ρ_{air} = 1.18282 kg/m^3
m_{uncorr} = 100.0000 mg
ρ_{weight} = 8000 kg/m^3
ρ_{media} = 920 kg/m^3

$$m_{cor} = 100.0000 \cdot \left[\frac{1 - \frac{1.18282}{8000}}{1 - \frac{1.18282}{920}} \right]$$

m_{cor} = 100.1139 mg

§ 1065.695 Data requirements.

(a) To determine the information we require from engine tests, refer to the standard-setting part and request from your Designated Compliance Officer the format used to apply for certification or demonstrate compliance. We may require different information for different purposes, such as for certification applications, approval requests for alternate procedures, selective enforcement audits, laboratory audits, production-line test reports, and field-test reports.

(b) See the standard-setting part and § 1065.25 regarding recordkeeping.

(c) We may ask you the following about your testing, and we may ask you for other information as allowed under the Act:

(1) What approved alternate procedures did you use? For example:

(i) Partial-flow dilution for proportional PM.

(ii) CARB test procedures.

(iii) ISO test procedures.

(2) What laboratory equipment did you use? For example, the make, model, and description of the following:

(i) Engine dynamometer and operator demand.

(ii) Probes, dilution, transfer lines, and sample preconditioning components.

(iii) Batch storage media (such as the bag material or PM filter material).

(3) What measurement instruments did you use? For example, the make, model, and description of the following:

(i) Speed and torque instruments.

(ii) Flow meters.

(iii) Gas analyzers.

(iv) PM balance.

(4) When did you conduct calibrations and performance checks and what were the results? For example, the dates and results of the following:

(i) Linearity checks.

(ii) Interference checks.

(iii) Response checks.

(iv) Leak checks.

(v) Flow meter checks.

(5) What engine did you test? For example, the following:

(i) Manufacturer.

(ii) Family name on engine label.

(iii) Model.

(iv) Model year.

(v) Identification number.

(6) How did you prepare and configure your engine for testing? Consider the following examples:

(i) Dates, hours, duty cycle and fuel used for service accumulation.

(ii) Dates and description of scheduled and unscheduled maintenance.

(iii) Allowable pressure range of intake restriction.

(iv) Allowable pressure range of exhaust restriction.

(v) Charge air cooler volume.

(vi) Charge air cooler outlet temperature, specified engine conditions and location of temperature measurement.

(vii) Fuel temperature and location of measurement.

(viii) Any aftertreatment system configuration and description.

(ix) Any crankcase ventilation configuration and description (e.g., open, closed, PCV, crankcase scavenged).

(7) How did you test your engine? For example:

(i) Constant speed or variable speed.

(ii) Mapping procedure (step or sweep).

(iii) Continuous or batch sampling for each emission.

(iv) Raw or dilute sampling; any dilution-air background sampling.

(v) Duty cycle and test intervals.

(vi) Cold-start, hot-start, warmed-up running.

(vii) Absolute pressure, temperature, and dewpoint of intake and dilution air.

(viii) Simulated engine loads, curb idle transmission torque value.

(ix) Warm-idle speed value and any enhanced-idle speed value.

(x) Simulated vehicle signals applied during testing.

(xi) Bypassed governor controls during testing.

(xii) Date, time, and location of test (e.g., dynamometer laboratory identification).

(xiii) Cooling medium for engine and charge air.

(xiv) Operating temperatures of coolant, head, and block.

(xv) Natural or forced cool-down and cool-down time.

(xvi) Canister loading.

(8) How did you validate your testing? For example, results from the following:

(i) Duty cycle regression statistics for each test interval.

(ii) Proportional sampling.

(iii) Drift.

(iv) Reference PM sample media in PM-stabilization environment.

(9) How did you calculate results? For example, results from the following:

(i) Drift correction.

(ii) Noise correction.

(iii) ''Dry-to-wet'' correction.

(iv) NMHC, CH_4, and contamination correction.

(v) NO_X humidity correction.

(vi) Brake-specific emission formulation—total mass divided by total work, mass rate divided by power, or ratio of mass to work.

(vii) Rounding emission results.

(10) What were the results of your testing? For example:

(i) Maximum mapped power and speed at maximum power.

(ii) Maximum mapped torque and speed at maximum torque.

(iii) For constant-speed engines: no-load governed speed.

(iv) For constant-speed engines: test torque.

(v) For variable-speed engines: maximum test speed.

(vi) Speed versus torque map.

(vii) Speed versus power map.

(viii) Brake-specific emissions over the duty cycle and each test interval.

(ix) Brake-specific fuel consumption.

(11) What fuel did you use? For example:

(i) Fuel that met specifications of subpart H of this part.

(ii) Alternate fuel.

(iii) Oxygenated fuel.

(12) How did you field test your engine? For example:

(i) Data from paragraphs (c)(1), (3), (4), (5), and (9) of this section.

(ii) Probes, dilution, transfer lines, and sample preconditioning components.

(iii) Batch storage media (such as the bag material or PM filter material).

(iv) Continuous or batch sampling for each emission.

(v) Raw or dilute sampling; any dilution air background sampling.

(vi) Cold-start, hot-start, warmed-up running.

(vii) Intake and dilution air absolute pressure, temperature, dewpoint.

(viii) Curb idle transmission torque value.

(ix) Warm idle speed value, any enhanced idle speed value.

(x) Date, time, and location of test (e.g., identify the testing laboratory).

(xi) Proportional sampling validation.

(xii) Drift validation.

(xiii) Operating temperatures of coolant, head, and block.

(xiv) Vehicle make, model, model year, identification number.

Subpart H—Engine Fluids, Test Fuels, Analytical Gases and Other Calibration Standards

§ 1065.701 General requirements for test fuels.

(a) *General.* For all emission measurements, use test fuels that meet the specifications in this subpart, unless the standard-setting part directs otherwise. Section 1065.10(c)(1) does not apply with respect to test fuels. Note that the standard-setting parts generally require that you design your emission controls to function properly when using commercially available fuels, even if they differ from the test fuel.

(b) *Fuels meeting alternate specifications.* We may allow you to use a different test fuel (such as California Phase 2 gasoline) if you show us that using it does not affect your ability to comply with all applicable emission standards using commercially available fuels.

(c) *Fuels not specified in this subpart.* If you produce engines that run on a type of fuel (or mixture of fuels) that we do not specify in this subpart, you must get our written approval to establish the appropriate test fuel. You must show us all the following things before we can specify a different test fuel for your engines:

(1) Show that this type of fuel is commercially available.

(2) Show that your engines will use only the designated fuel in service.

(3) Show that operating the engines on the fuel we specify would unrepresentatively increase emissions or decrease durability.

(d) *Fuel specifications.* The fuel parameters specified in this subpart depend on measurement procedures that are incorporated by reference. For any of these procedures, you may instead rely upon the procedures identified in 40 CFR part 80 for measuring the same parameter. For example, we may identify different reference procedures for measuring gasoline parameters in 40 CFR 80.46.

(e) *Service accumulation and field testing fuels.* If we do not specify a service-accumulation or field-testing fuel in the standard-setting part, use an appropriate commercially available fuel such as those meeting minimum ASTM specifications from the following table:

TABLE 1 OF § 1065.701—SPECIFICATIONS FOR SERVICE-ACCUMULATION AND FIELD-TESTING FUELS

Fuel type	Subcategory	ASTM specification [1]
Diesel	Light distillate and light blends with residual	D975–04c
	Middle distillate	D6751–03a
	Biodiesel (B100)	D6985–04a
Gasoline	Motor vehicle and minor oxygenate blends	D4814–04b
	Ethanol (Ed75–85)	D5798–99
	Methanol (M70–M85)	D5797–96
Aviation fuel	Aviation gasoline	D910–04a
	Gas turbine	D1655–04a
	Jet B wide cut	D6615–04a
Gas turbine fuel	General	D2880–03

[1] All ASTM specifications are incorporated by reference in § 1065.1010.

§ 1065.703 Distillate diesel fuel.

(a) Distillate diesel fuels for testing must be clean and bright, with pour and cloud points adequate for proper engine operation.

(b) There are three grades of #2 diesel fuel specified for use as a test fuel. See the standard-setting part to determine which grade to use. If the standard-setting part does not specify which grade to use, use good engineering judgment to select the grade that represents the fuel on which the engines will operate in use. The three grades are specified in Table 1 of this section.

(c) You may use the following nonmetallic additives with distillate diesel fuels:

(1) Cetane improver.
(2) Metal deactivator.
(3) Antioxidant, dehazer.
(4) Rust inhibitor.
(5) Pour depressant.
(6) Dye.
(7) Dispersant.
(8) Biocide.

TABLE 1 OF § 1065.703—TEST FUEL SPECIFICATIONS FOR DISTILLATE DIESEL FUEL

Item	Units	Ultra low sulfur	Low sulfur	High sulfur	Reference procedure [1]
Cetane Number		40–50	40–50	40–50	ASTM D 613–03b
Distillation range:					
Initial boiling point	°C	171–204	171–204	171–204	ASTM D 86–04b
10 pct. point	°C	204–238	204–238	204–238	
50 pct. point	°C	243–282	243–282	243–282	
90 pct. point	°C	293–332	293–332	293–332	
Endpoint	°C	321–366	321–366	321–366	
Gravity	°API	32–37	32–37	32–37	ASTM D 287–92
Total sulfur	mg/kg	7–15	300–500	2000–4000	ASTM D 2622–03
Aromatics, minimum. (Remainder shall be paraffins, naphthalenes, and olefins).	g/kg	100	100	100	ASTM D 5186–03
Flashpoint, min	°C	54	54	54	ASTM D 93–02a
Viscosity	cSt	2.0–3.2	2.0–3.2	2.0–3.2	ASTM D 445–04

[1] All ASTM procedures are incorporated by reference in § 1065.1010. See § 1065.701(d) for other allowed procedures.

§ 1065.705 Residual fuel. [Reserved]

§ 1065.710 Gasoline.

(a) Gasoline for testing must have octane values that represent commercially available fuels for the appropriate application.

(b) There are two grades of gasoline specified for use as a test fuel. If the standard-setting part requires testing with fuel appropriate for low temperatures, use the test fuel specified for low-temperature testing. Otherwise, use the test fuel specified for general testing. The two grades are specified in Table 1 of this section.

TABLE 1 OF § 1065.710—TEST FUEL SPECIFICATIONS FOR GASOLINE

Item	Units	General testing	Low-temperature testing	Reference procedure [1]
Distillation Range:				
Initial boiling point	°C	24–35 [2]	24–36	ASTM D 86–04b
10% point	°C	49–57	37–48.	
50% point	°C	93–110	82–101.	
90% point	°C	149–163	158–174.	
End point	°C	Maximum, 213	Maximum, 212.	
Hydrocarbon composition:				
1. Olefins	mm^3/m^3	Maximum, 100,000	Maximum, 175,000	ASTM D 1319–03
2. Aromatics	mm^3/m^3	Maximum, 350,000	Maximum, 304,000.	
3. Saturates	mm^3/m^3	Remainder	Remainder.	
Lead (organic)	g/liter	Maximum, 0.013	Maximum, 0.013	ASTM D 3237–02
Phosphorous	g/liter	Maximum, 0.0013	Maximum, 0.005	ASTM D 3231–02
Total sulfur	mg/kg	Maximum, 80	Maximum, 80	ASTM D 1266–98
Volatility (Reid Vapor Pressure)	kPa	60.0–63.4 [2,3]	77.2–81.4	ASTM D 323–99a

[1] All ASTM procedures are incorporated by reference in § 1065.1010. See § 1065.701(d) for other allowed procedures.
[2] For testing at altitudes above 1 219 m, the specified volatility range is (52 to 55) kPa and the specified initial boiling point range is (23.9 to 40.6) °C.
[3] For testing unrelated to evaporative emissions, the specified range is (55 to 63) kPa.

§ 1065.715 Natural gas.

(a) Natural gas for testing must meet the specifications in the following table:

TABLE 1 OF § 1065.715—TEST FUEL SPECIFICATIONS FOR NATURAL GAS

Item	Value[1]
1. Methane, CH_4	Minimum, 0.87 mol/mol.
2. Ethane, C_2H_6	Maximum, 0.055 mol/mol.
3. Propane, C_3H_8	Maximum, 0.012 mol/mol.
4. Butane, C_4H_{10}	Maximum, 0.0035 mol/mol.
5. Pentane, C_5H_{12}	Maximum, 0.0013 mol/mol.
6. C_6 and higher	Maximum, 0.001 mol/mol.
7. Oxygen	Maximum, 0.001 mol/mol.
8. Inert gases (sum of CO_2 and N_2)	Maximum, 0.051 mol/mol.

[1] All parameters are based on the reference procedures in ASTM D 1945–03 (incorporated by reference in § 1065.1010). See § 1065.701(d) for other allowed procedures.

(b) At ambient conditions, natural gas must have a distinctive odor detectable down to a concentration in air not more than one-fifth the lower flammable limit.

§ 1065.720 Liquefied petroleum gas.

(a) Liquefied petroleum gas for testing must meet the specifications in the following table:

TABLE 1 OF § 1065.720—TEST FUEL SPECIFICATIONS FOR LIQUEFIED PETROLEUM GAS

Item	Value	Reference Procedure[1]
1. Propane, C_3H_8	Minimum, 0.85 m^3/m^3	ASTM D 2163–91
2. Vapor pressure at 38 °C	Maximum, 1400 kPa	ASTM D 1267–02 or 2598–02[2]
3. Volatility residue evaporated temperature, 35 °C).	Maximum, −38 °C	ASTM D 1837–02a
4. Butanes	Maximum, 0.05 m^3/m^3	ASTM D 2163–91
5. Butenes	Maximum, 0.02 m^3/m^3	ASTM D 2163–91
6. Pentenes and heavier	Maximum, 0.005 m^3/m^3	ASTM D 2163–91
7. Propene	Maximum, 0.1 m^3/m^3	ASTM D 2163–91
8. Residual matter (residue on evap. of 100) ml oil stain observ.).	Maximum, 0.05 ml pass[3]	ASTM D 2158–04
9. Corrosion, copper strip	Maximum, No. 1	ASTM D 1838–03
10. Sulfur	Maximum, 80 mg/kg	ASTM D 2784–98
11. Moisture content	pass	ASTM D 2713–91

[1] All ASTM procedures are incorporated by reference in § 1065.1010. See § 1065.701(d) for other allowed procedures.
[2] If these two test methods yield different results, use the results from ASTM D 1267–02.
[3] The test fuel must not yield a persistent oil ring when you add 0.3 ml of solvent residue mixture to a filter paper in 0.1 ml increments and examine it in daylight after two minutes.

(b) At ambient conditions, liquefied petroleum gas must have a distinctive odor detectable down to a concentration in air not more than one-fifth the lower flammable limit.

§ 1065.740 Lubricants.

(a) Use commercially available lubricating oil that represents the oil that will be used in your engine in use.

(b) You may use lubrication additives, up to the levels that the additive manufacturer recommends.

§ 1065.745 Coolants.

(a) You may use commercially available antifreeze mixtures or other coolants that will be used in your engine in use.

(b) For laboratory testing of liquid-cooled engines, you may use water with or without rust inhibitors.

(c) For coolants allowed in paragraphs (a) and (b) of this section, you may use rust inhibitors and additives required for lubricity, up to the levels that the additive manufacturer recommends.

§ 1065.750 Analytical gases.

Analytical gases must meet the accuracy and purity specifications of this section, unless you can show that other specifications would not affect your ability to show that your engines comply with all applicable emission standards.

(a) Subparts C, D, F, and J of this part refer to the following gas specifications:

(1) Use purified gases to zero measurement instruments and to blend with calibration gases. Use gases with contamination no higher than the highest of the following values in the gas cylinder or at the outlet of a zero-gas generator:

(i) 2% contamination, measured relative to the flow-weighted mean concentration expected at the standard. For example, if you would expect a flow-weighted CO concentration of 100.0 mmol/mol, then you would be allowed to use a zero gas with CO contamination less than or equal to 2.000 mmol/mol.

(ii) Contamination as specified in the following table:

TABLE 1 OF § 1065.750—GENERAL SPECIFICATIONS FOR PURIFIED GASES

Constituent	Purified air [1]	Purified N_2 [1]
THC (C_1 equivalent)	<0.05 μmol/mol	< 0.05 μmol/mol
CO	<1 μmol/mol	< 1 μmol/mol
CO_2	< 10 μmol/mol	< 10 μmol/mol
O_2	0.205 to 0.215 mol/mol	< 2 μmol/mol
NO_X	< 0.02 μmol/mol	< 0.02 μmol/mol

[1] We do not require these levels of purity to be NIST-traceable.

(2) Use the following gases with a FID analyzer:

(i) *FID fuel.* Use FID fuel with an H_2 concentration of (0.400 ±0.004) mol/mol, balance He. Make sure the mixture contains no more than 0.05 μmol/mol THC.

(ii) *FID burner air.* Use FID burner air that meets the specifications of purified air in paragraph (a)(1) of this section. For field testing, you may use ambient air.

(iii) *FID zero gas.* Zero flame-ionization detectors with purified gas that meets the specifications in paragraph (a)(1) of this section, except that the purified gas O_2 concentration may be any value. Note that FID zero balance gases may be any combination of purified air and purified nitrogen. We recommend FID analyzer zero gases that contain approximately the flow-weighted mean concentration of O_2 expected during testing.

(iv) *FID propane span gas.* Span and calibrate THC FID with span concentrations of propane, C_3H_8. Calibrate on a carbon number basis of one (C_1). For example, if you use a C_3H_8 span gas of concentration 200 μmol/mol, span a FID to respond with a value of 600 μmol/mol. Note that FID span balance gases may be any combination of purified air and purified nitrogen. We recommend FID analyzer span gases that contain approximately the flow-weighted mean concentration of O_2 expected during testing.

(v) *FID methane span gas.* If you always span and calibrate a CH_4 FID with a nonmethane cutter, then span and calibrate the FID with span concentrations of methane, CH_4. Calibrate on a carbon number basis of one (C_1). For example, if you use a CH_4 span gas of concentration 200 μmol/mol, span a FID to respond with a value of 200 μmol/mol. Note that FID span balance gases may be any combination of purified air and purified nitrogen. We recommend FID analyzer span gases that contain approximately the flow-weighted mean concentration of O_2 expected during testing.

(3) Use the following gas mixtures, with gases traceable within ±1.0% of the NIST true value or other gas standards we approve:

(i) CH_4, balance purified synthetic air and/or N_2 (as applicable).

(ii) C_2H_6, balance purified synthetic air and/or N_2 (as applicable).

(iii) C_3H_8, balance purified synthetic air and/or N_2 (as applicable).

(iv) CO, balance purified N_2.

(v) CO_2, balance purified N_2.

(vi) NO, balance purified N_2.

(vii) NO_2, balance purified N_2.

(viii) O_2, balance purified N_2.

(ix) C_3H_8, CO, CO_2, NO, balance purified N_2.

(x) C_3H_8, CH_4, CO, CO_2, NO, balance purified N_2.

(4) You may use gases for species other than those listed in paragraph (a)(3) of this section (such as methanol in air, which you may use to determine response factors), as long as they are traceable to within ±1.0 % of the NIST true value or other similar standards we approve, and meet the stability requirements of paragraph (b) of this section.

(5) You may generate your own calibration gases using a precision blending device, such as a gas divider, to dilute gases with purified N_2 or purified synthetic air. If your gas dividers meet the specifications in § 1065.248, and the gases being blended meet the requirements of paragraphs (a)(1) and (3) of this section, the resulting blends are considered to meet the requirements of this paragraph (a).

(b) Record the concentration of any calibration gas standard and its expiration date specified by the gas supplier.

(1) Do not use any calibration gas standard after its expiration date, except as allowed by paragraph (b)(2) of this section.

(2) Calibration gases may be relabeled and used after their expiration date as follows:

(i) Alcohol/carbonyl calibration gases used to determine response factors according to subpart I of this part may be relabeled as specified in subpart I of this part.

(ii) Other gases may be relabeled and used after the expiration date only if we approve it in advance.

(c) Transfer gases from their source to analyzers using components that are dedicated to controlling and transferring only those gases. For example, do not use a regulator, valve, or transfer line for zero gas if those components were previously used to transfer a different gas mixture. We recommend that you label regulators, valves, and transfer lines to prevent contamination. Note that even small traces of a gas mixture in the dead volume of a regulator, valve, or transfer line can diffuse upstream into a high-pressure volume of gas, which would contaminate the entire high-pressure gas source, such as a compressed-gas cylinder.

(d) To maintain stability and purity of gas standards, use good engineering judgment and follow the gas standard supplier's recommendations for storing and handling zero, span, and calibration gases. For example, it may be necessary to store bottles of condensable gases in a heated environment.

§ 1065.790 Mass standards.

(a) *PM balance calibration weights.* Use PM balance calibration weights that are certified as NIST-traceable within 0.1 % uncertainty. Calibration weights may be certified by any calibration lab that maintains NIST-traceability. Make sure your lowest calibration weight has no greater than ten times the mass of an unused PM-sample medium.

(b) *Dynamometer calibration weights.* [Reserved]

Subpart I—Testing With Oxygenated Fuels

§ 1065.801 Applicability.

(a) This subpart applies for testing with oxygenated fuels. Unless the standard-setting part specifies otherwise, the requirements of this subpart do not apply for fuels that contain less than 25% oxygenated compounds by volume. For example, you generally do not need to follow the requirements of this subpart for tests performed using a fuel containing 10% ethanol and 90% gasoline, but you must follow these requirements for tests performed using a fuel containing 85% ethanol and 15% gasoline.

(b) Section 1065.805 applies for all other testing that requires measurement of any alcohols or carbonyls.

(c) This subpart specifies sampling procedures and calculations that are different than those used for non-oxygenated fuels. All other test procedures of this part 1065 apply for testing with oxygenated fuels.

§ 1065.805 Sampling system.

(a) Proportionally dilute engine exhaust, and use batch sampling collect

flow-weighted dilute samples of the applicable alcohols and carbonyls at a constant flow rate. You may not use raw sampling for alcohols and carbonyls.

(b) You may collect background samples for correcting dilution air for background concentrations of alcohols and carbonyls.

(c) Maintain sample temperatures within the dilution tunnel, probes, and sample lines less than 121 °C but high enough to prevent aqueous condensation up to the point where a sample is collected. The maximum temperature limit is intended to prevent chemical reaction of the alcohols and carbonyls. The lower temperature limit is intended to prevent loss of the alcohols and carbonyls by dissolution in condensed water. Use good engineering judgment to minimize the amount of time that the undiluted exhaust is outside this temperature range to the extent practical. We recommend that you minimize the length of exhaust tubing before dilution. Extended lengths of exhaust tubing may require preheating, insulation, and cooling fans to limit excursions outside this temperature range.

(d) You may bubble a sample of the exhaust through water to collect alcohols for later analysis. You may also use a photo-acoustic analyzer to quantify ethanol and methanol in an exhaust sample.

(e) Sample the exhaust through cartridges impregnated with 2,4-dinitrophenylhydrazine to collect carbonyls for later analysis. If the standard-setting part specifies a duty cycle that has multiple test intervals (such as multiple engine starts or an engine-off soak phase), you may proportionally collect a single carbonyl sample for the entire duty cycle. For example, if the standard-setting part specifies a six-to-one weighting of hot-start to cold-start emissions, you may collect a single carbonyl sample for the entire duty cycle by using a hot-start sample flow rate that is six times the cold-start sample flow rate.

(f) You may sample alcohols or carbonyls using ''California Non-Methane Organic Gas Test Procedures'' (incorporated by reference in §1065.1010). If you use this method, follow its calculations to determine the mass of the alcohol/carbonyl in the exhaust sample, but follow subpart G of this part for all other calculations.

(g) Use good engineering judgment to sample other oxygenated hydrocarbon compounds in the exhaust.

§1065.845 Response factor determination.

Since FID analyzers generally have an incomplete response to alcohols and carbonyls, determine each FID analyzer's alcohol/carbonyl response factor (such as RF_{MeOH}) after FID optimization. Formaldehyde response is assumed to be zero and does not need to be determined. Use the most recent alcohol/carbonyl response factors to compensate for alcohol/carbonyl response.

(a) Determine the alcohol/carbonyl response factors as follows:

(1) Select a C_3H_8 span gas that meets the specifications of §1065.750. Note that FID zero and span balance gases may be any combination of purified air or purified nitrogen that meets the specifications of §1065.750. We recommend FID analyzer zero and span gases that contain approximately the flow-weighted mean concentration of O_2 expected during testing. Record the C_3H_8 concentration of the gas.

(2) Select or prepare an alcohol/carbonyl calibration gas that meets the specifications of §1065.750 and has a concentration typical of the peak concentration expected at the hydrocarbon standard. Record the calibration concentration of the gas.

(3) Start and operate the FID analyzer according to the manufacturer's instructions.

(4) Confirm that the FID analyzer has been calibrated using C_3H_8. Calibrate on a carbon number basis of one (C_1). For example, if you use a C_3H_8 span gas of concentration 200 µmol/mol, span the FID to respond with a value of 600 µmol/mol.

(5) Zero the FID. Note that FID zero and span balance gases may be any combination of purified air or purified nitrogen that meets the specifications of §1065.750. We recommend FID analyzer zero and span gases that contain approximately the flow-weighted mean concentration of O_2 expected during testing.

(6) Span the FID with the C_3H_8 span gas that you selected under paragraph (a)(1) of this section.

(7) Introduce at the inlet of the FID analyzer the alcohol/carbonyl calibration gas that you selected under paragraph (a)(2) of this section.

(8) Allow time for the analyzer response to stabilize. Stabilization time may include time to purge the analyzer and to account for its response.

(9) While the analyzer measures the alcohol/carbonyl concentration, record 30 seconds of sampled data. Calculate the arithmetic mean of these values.

(10) Divide the mean measured concentration by the recorded span concentration of the alcohol/carbonyl calibration gas. The result is the FID analyzer's response factor for alcohol/carbonyl, RF_{MeOH}.

(b) Alcohol/carbonyl calibration gases must remain within ±2% of the labeled concentration. You must demonstrate the stability based on a quarterly measurement procedure with a precision of ±2% percent or another method that we approve. Your measurement procedure may incorporate multiple measurements. If the true concentration of the gas changes deviates by more than ±2%, but less than ±10%, the gas may be relabeled with the new concentration.

§ 1065.850 Calculations.

Use the calculations specified in § 1065.665 to determine THCE or NMHCE.

Subpart J—Field Testing and Portable Emission Measurement Systems

§ 1065.901 Applicability.

(a) *Field testing.* This subpart specifies procedures for field-testing engines to determine brake-specific emissions using portable emission measurement systems (PEMS). These procedures are designed primarily for in-field measurements of engines that remain installed in vehicles or equipment in the field. Field-test procedures apply to your engines only as specified in the standard-setting part.

(b) *Laboratory testing.* You may optionally use PEMS for any laboratory testing, as long as the standard-setting part does not prohibit it for certain types of laboratory testing, subject to the following provisions:

(1) Follow the laboratory test procedures specified in this part 1065, according to § 1065.905(e).

(2) Do not apply any PEMS-related field-testing adjustments or ''measurement allowances'' to laboratory emission results or standards.

(3) Do not use PEMS for laboratory measurements if it prevents you from demonstrating compliance with the applicable standards. Some of the PEMS requirements in this part 1065 are less stringent than the corresponding laboratory requirements. Depending on actual PEMS performance, you might therefore need to account for some additional measurement uncertainty when using PEMS for laboratory testing. If we ask, you must show us by engineering analysis that any additional measurement uncertainty due to your use of PEMS for laboratory testing is offset by the extent to which your engine's emissions are below the applicable standards. For example, you might show that PEMS versus laboratory uncertainty represents 5% of the standard, but your engine's deteriorated emissions are at least 20% below the standard for each pollutant.

§ 1065.905 General provisions.

(a) *General.* Unless the standard-setting part specifies deviations from the provisions of this subpart, field testing and laboratory testing with PEMS must conform to the provisions of this subpart.

(b) *Field-testing scope.* Field testing conducted under this subpart may include any normal in-use operation of an engine.

(c) *Field testing and the standard-setting part.* This subpart J specifies procedures for field-testing various categories of engines. See the standard-setting part for specific provisions for a particular type of engine. Before using this subpart's procedures for field testing, read the standard-setting part to answer at least the following questions:

(1) How many engines must I test in the field?

(2) How many times must I repeat a field test on an individual engine?

(3) How do I select vehicles for field testing?

(4) What maintenance steps may I take before or between tests?

(5) What data are needed for a single field test on an individual engine?

(6) What are the limits on ambient conditions for field testing? Note that the ambient condition limits in § 1065.520 do not apply for field testing.

(7) Which exhaust constituents do I need to measure?

(8) How do I account for crankcase emissions?

(9) Which engine and ambient parameters do I need to measure?

(10) How do I process the data recorded during field testing to determine if my engine meets field-testing standards? How do I determine individual test intervals? Note that ''test interval'' is defined in subpart K of this part 1065.

(11) Should I warm up the test engine before measuring emissions, or do I need to measure cold-start emissions during a warm-up segment of in-use operation?

(12) Do any unique specifications apply for test fuels?

(13) Do any special conditions invalidate parts of a field test or all of a field test?

(14) Does any special ''measurement allowance'' apply to field-test emission results or standards, based on using PEMS for field-testing versus using laboratory equipment and instruments for laboratory testing?

(15) Do results of initial field testing trigger any requirement for additional field testing or laboratory testing?

(16) How do I report field-testing results?

(d) *Field testing and this part 1065.* Use the following specifications for field testing:

(1) Use the applicability and general provisions of subpart A of this part.

(2) Use equipment specifications in § 1065.101 and in the sections from § 1065.140 to the end of subpart B of this part. Section 1065.910 specifies additional equipment specific to field testing.

(3) Use measurement instruments in subpart C of this part, except as specified in § 1065.915.

(4) Use calibrations and verifications in subpart D of this part, except as specified in § 1065.920. Section 1065.920 also specifies additional calibrations and verifications for field testing.

(5) Use the provisions of the standard-setting part for selecting and maintaining engines in the field instead of the specifications in subpart E of this part.

(6) Use the procedures in §§ 1065.930 and 1065.935 to start and run a field test. If you use a gravimetric balance for PM, weigh PM samples according to §§ 1065.590 and 1065.595.

(7) Use the calculations in subpart G of this part to calculate emissions over each test interval. Note that ''test interval'' is defined in subpart K of this part 1065, and that the standard setting part indicates how to determine test intervals for your engine.

Section 1065.940 specifies additional calculations for field testing. Use any calculations specified in the standard-setting part to determine if your engines meet the field-testing standards. The standard-setting part may also contain additional calculations that determine when further field testing is required.

(8) Use a typical in-use fuel meeting the specifications of § 1065.701(d).

(9) Use the lubricant and coolant specifications in § 1065.740 and § 1065.745.

(10) Use the analytical gases and other calibration standards in § 1065.750 and § 1065.790.

(11) If you are testing with oxygenated fuels, use the procedures specified for testing with oxygenated fuels in subpart I of this part.

(12) Apply the definitions and reference materials in subpart K of this part.

(e) *Laboratory testing using PEMS.* Use the following specifications when using PEMS for laboratory testing:

(1) Use the applicability and general provisions of subpart A of this part.

(2) Use equipment specifications in subpart B of this part. Section 1065.910 specifies additional equipment specific to testing with PEMS.

(3) Use measurement instruments in subpart C of this part, except as specified in § 1065.915.

(4) Use calibrations and verifications in subpart D of this part, except as

specified in § 1065.920. Section 1065.920 also specifies additional calibration and verifications for PEMS.

(5) Use the provisions of § 1065.401 for selecting engines for testing. Use the provisions of subpart E of this part for maintaining engines, except as specified in the standard-setting part.

(6) Use the procedures in subpart F of this part and in the standard-setting part to start and run a laboratory test.

(7) Use the calculations in subpart G of this part to calculate emissions over the applicable duty cycle. Section 1065.940 specifies additional calculations for testing with PEMS.

(8) Use a fuel meeting the specifications of subpart H of this part, as specified in the standard-setting part.

(9) Use the lubricant and coolant specifications in § 1065.740 and § 1065.745.

(10) Use the analytical gases and other calibration standards in § 1065.750 and § 1065.790.

(11) If you are testing with oxygenated fuels, use the procedures specified for testing with oxygenated fuels in subpart I of this part.

(12) Apply the definitions and reference materials in subpart K of this part.

(f) *Summary*. The following table summarizes the requirements of paragraphs (d) and (e) of this section:

TABLE 1 OF § 1065.905—SUMMARY OF TESTING REQUIREMENTS THAT ARE SPECIFIED OUTSIDE OF THIS SUBPART J [1]

Subpart	Applicability for field testing	Applicability for laboratory testing with PEMS
A: Applicability and general provisions	Use all	Use all.
B: Equipment for testing	Use § 1065.101 and § 1065.140 through the end of subpart B. § 1065.910 specifies equipment specific to field testing.	Use all. § 1065.910 specifies equipment specific to laboratory testing with PEMS.
C: Measurement instruments	Use all	Use all.
	§ 1065.915 allows deviations	§ 1065.915 allows deviations.
D: Calibrations and verifications	Use all	Use all.
	§ 1065.920 allows deviations, but also has additional specifications.	§ 1065.920 allows deviations, but also has additional specifications.
E: Test engine selection, maintenance, and durability.	Do not use	Use all.
	Use standard-setting part	
F: Running an emission test in the laboratory.	Use §§ 1065.590 and 1065.595 for PM	Use all.
	§ 1065.930 and § 1065.935 to start and run a field test.	
G: Calculations and data requirements	Use all	Use all.
	Use standard-setting part	Use standard-setting part.
	§ 1065.940 has additional calculation instructions.	§ 1065.940 has additional calculation instructions.
H: Fuels, engine fluids, analytical gases, and other calibration materials.	Use fuels specified in § 1065.701(d)	Use fuels from subpart H of this part as specified in standard-setting part.
	Use lubricant and coolant specifications in § 1065.740 and § 1065.745.	Use lubricant and coolant specifications in subpart H of this part.
	Use analytical gas specifications and other calibration standards in § 1065.750 and § 1065.790.	Use analytical gas specifications and other calibration standards in § 1065.750 and § 1065.790.
I: Testing with oxygenated fuels	Use all	Use all.
K: Definitions and reference materials	Use all	Use all.

[1] Refer to paragraphs (d) and (e) of this section for complete specifications.

§ 1065.910 PEMS auxiliary equipment for field testing.

For field testing you may use various types of auxiliary equipment to attach PEMS to a vehicle or engine and to power PEMS.

(a) When you use PEMS, you will likely route engine exhaust to a raw-exhaust flow meter and sample probes. Route the engine exhaust as follows:

(1) *Flexible connections.* Use short flexible connectors at the end of the engine's exhaust pipe.

(i) You may use flexible connectors to enlarge or reduce the exhaust-pipe diameter to match that of your test equipment.

(ii) Use flexible connectors that do not exceed a length of three times their largest inside diameter.

(iii) Use four-ply silicone-fiberglass fabric with a temperature rating of at least 315 °C for flexible connectors. You may use connectors with a spring-steel wire helix for support and you may use Nomex™ coverings or linings for durability. You may also use any other material with equivalent permeation-resistance and durability, as long as it seals tightly around tailpipes and does not react with exhaust.

(iv) Use stainless-steel hose clamps to seal flexible connectors to the outside diameter of tailpipes, or use clamps that seal equivalently.

(v) You may use additional flexible connectors to connect to flow meters and sample probe locations.

(2) *Raw exhaust tubing.* Use rigid 300 series stainless steel tubing to connect between flexible connectors. Tubing may be straight or bent to accommodate vehicle geometry. You may use ''T'' or ''Y'' fittings made of 300 series stainless steel tubing to join exhaust from multiple tailpipes, or you may cap or plug redundant tailpipes if the engine manufacturer recommends it.

(3) *Exhaust back pressure.* Use connectors and tubing that do not increase back pressure so much that it exceeds the manufacturer's maximum specified exhaust restriction. You may verify this at the maximum exhaust flow rate by measuring back pressure at the manufacturer-specified location with your system connected. You may also perform an engineering analysis to verify proper back pressure, taking into account the maximum exhaust flow rate expected, the field test system's flexible connectors, and the tubing's characteristics for pressure drops versus flow.

(b) For vehicles or other motive equipment, we recommend installing PEMS in the same location where passenger might sit. Follow PEMS manufacturer instructions for installing PEMS in vehicle cargo spaces, vehicle trailers, or externally such that PEMS is directly exposed to the outside environment. Locate PEMS where it will be subject to minimal sources of the following parameters:

(1) Ambient temperature changes.

(2) Ambient pressure changes.

(3) Electromagnetic radiation.

(4) Mechanical shock and vibration.

(5) Ambient hydrocarbons—if using a FID analyzer that uses ambient air as FID burner air.

(c) *Mounting hardware.* Use mounting hardware as required for securing flexible connectors, exhaust tubing, ambient sensors, and other equipment. Use structurally sound mounting points such as vehicle frames, trailer hitch receivers, and payload tie-down fittings. We recommend mounting hardware such as clamps, suction cups, and magnets that are specifically designed for vehicle applications. We also recommend considering mounting hardware such as commercially available bicycle racks, trailer hitches, and luggage racks.

(d) *Electrical power.* Field testing may require portable electrical power to run your test equipment. Power your equipment, as follows:

(1) You may use electrical power from the vehicle, up to the highest power level, such that all the following are true:

(i) The vehicle power system is capable of safely supplying your power, such that your demand does not overload the vehicle's power system.

(ii) The engine emissions do not change significantly when you use vehicle power.

(iii) The power you demand does not increase output from the engine by more than 1% of its maximum power.

(2) You may install your own portable power supply. For example, you may use batteries, fuel cells, a portable generator, or any other power supply to supplement or replace your use of vehicle power. However, you must not supply power to the vehicle's power system under any circumstances.

§ 1065.915 PEMS instruments.

(a) *Instrument specifications.* We recommend that you use PEMS that meet the specifications of subpart C of this part. For field testing of for laboratory testing with PEMS, the specifications in the following table apply instead of the specifications in Table 1 of § 1065.205.

TABLE 1 OF § 1065.915—RECOMMENDED MINIMUM PEMS MEASUREMENT INSTRUMENT PERFORMANCE

Measurement	Measured quantity symbol	Rise time and fall time	Recording update frequency	Accuracy [1]	Repeatability [1]	Noise [1]
Engine speed transducer.	f_n	1 s	1 Hz means	5.0% of pt. or 1.0% of max.	2.0% of pt. or 1.0% of max	0.5% of max.
Engine torque estimator, BSFC (This is a signal from an engine's ECM).	*T* or *BSFC*	1 s	1 Hz means	8.0% of pt. or 5% of max.	2.0% of pt. or 1.0% of max	1.0% of max.
General pressure transducer (not a part of another instrument).	*p*	5 s	1 Hz	5.0% of pt. or 5.0% of max.	2.0% of pt. or 0.5% of max	1.0% of max.
Atmospheric pressure meter.	p_{atmos}	50 s	0.1 Hz	250 Pa	200 Pa	100 Pa.
General temperature sensor (not a part of another instrument).	*T*	5 s	1 Hz	1.0% of pt. K or 5 K.	0.5% of pt. K or 2 K	0.5% of max 0.5 K.
General dewpoint sensor.	T_{dew}	50 s	0.1 Hz	3 K	1 K	1 K.
Exhaust flow meter	$\dot{n}$	1 s	1 Hz means	5.0% of pt. or 3.0% of max.	2.0% of pt	2.0% of max.
Dilution air, inlet air, exhaust, and sample flow meters.	$\dot{n}$	1 s	1 Hz means	2.5% of pt. or 1.5% of max.	1.25% of pt. or 0.75% of max	1.0% of max.
Continuous gas analyzer.	*x*	5 s	1 Hz	4.0% of pt. or 4.0% of meas.	2.0% of pt. or 2.0% of meas	1.0% of max.
Gravimetric PM balance.	m_{PM}	N/A	N/A	*See* § 1065.790	0.5 µg	N/A
Inertial PM balance.	m_{PM}	5 s	1 Hz	4.0% of pt. or 4.0% of meas.	2.0% of pt. or 2.0% of meas	1.0% of max.

[1] Accuracy, repeatability, and noise are all determined with the same collected data, as described in § 1065.305, and based on absolute values. ''pt.'' refers to the overall flow-weighted mean value expected at the standard; ''max.'' refers to the peak value expected at the standard over any test interval, not the maximum of the instrument's range; ''meas'' refers to the actual flow-weighted mean measured over any test interval.

(b) *Redundant measurements.* For all PEMS described in this subpart, you may use data from multiple instruments to calculate test results for a single test. If you use redundant systems, use good engineering judgment to use multiple measured values in calculations or to disregard individual measurements. Note that you must keep your results from all measurements, as described in § 1065.25. This requirement applies whether or not you actually use the measurements in your calculations.

(c) *Field-testing ambient effects on PEMS.* PEMS must be only minimally affected by ambient conditions such as temperature, pressure, humidity, physical orientation, mechanical shock and vibration, electromagnetic radiation, and ambient hydrocarbons. Follow the PEMS manufacturer's instructions for proper installation to isolate PEMS from ambient conditions that affect their performance. If a PEMS is inherently affected by ambient conditions that you cannot control, you must monitor those conditions and adjust the PEMS signals to compensate for the ambient effect. The standard-setting part may also specify the use of one or more field-testing adjustments or ''measurement allowances'' that you apply to results or standards to account for ambient effects on PEMS.

(d) *ECM signals.* You may use signals from the engine's electronic control module (ECM) in place of values measured by individual instruments within a PEMS, subject to the following provisions:

(1) *Recording ECM signals.* If your ECM updates a broadcast signal more frequently than 1 Hz, take one of the following steps:

(i) Use PEMS to sample and record the signal's value more frequently—up to 5 Hz maximum. Calculate and record

the 1 Hz mean of the more frequently updated data.

(ii) Use PEMS to electronically filter the ECM signals to meet the rise time and fall time specifications in Table 1 of this section. Record the filtered signal at 1 Hz.

(2) *Omitting ECM signals.* Replace any discontinuous or irrational ECM data with linearly interpolated values from adjacent data.

(3) *Aligning ECM signals with other data.* You must perform time-alignment and dispersion of ECM signals, according to PEMS manufacturer instructions and using good engineering judgment.

(4) *ECM signals for determining test intervals.* You may use any combination of ECM signals, with or without other measurements, to determine the start-time and end-time of a test interval.

(5) *ECM signals for determining brake-specific emissions.* You may use any combination of ECM signals, with or without other measurements, to estimate engine speed, torque, and brake-specific fuel consumption (BSFC, in units of mass of fuel per kW-hr) for use in brake-specific emission calculations. We recommend that the overall performance of any speed, torque, or BSFC estimator should meet the performance specifications in Table 1 of this section. We recommend using one of the following methods:

(i) *Speed.* Use the engine speed signal directly from the ECM. This signal is generally accurate and precise. You may develop your own speed algorithm based on other ECM signals.

(ii) *Torque.* Use one of the following:

(A) *ECM torque.* Use the engine-torque signal directly from the ECM, if broadcast. Determine if this signal is proportional to indicated torque or brake torque. If it is proportional to indicated torque, subtract friction torque from indicated torque and record the result as brake torque. Friction torque may be a separate signal broadcast from the ECM or you may have to determine it from laboratory data as a function of engine speed.

(B) *ECM %-load.* Use the %-load signal directly from the ECM, if broadcast. Determine if this signal is proportional to indicated torque or brake torque. If it is proportional to indicated torque, subtract the minimum %-load value from the %-load signal. Multiply this result by the maximum brake torque at the corresponding engine speed. Maximum brake torque versus speed information is commonly published by the engine manufacturer.

(C) *Your algorithms.* You may develop and use your own combination of ECM signals to determine torque.

(iii) *BSFC.* Use one of the following:

(A) Use ECM engine speed and ECM fuel flow signals to interpolate brake-specific fuel consumption data, which might be available from an engine laboratory as a function of ECM engine speed and ECM fuel signals.

(B) Use a single BSFC value that approximates the BSFC value over a test interval (as defined in subpart K of this part). This value may be a nominal BSFC value for all engine operation determined over one or more laboratory duty cycles, or it may be any other BSFC that we approve. If you use a nominal BSFC, we recommend that you select a value based on the BSFC measured over laboratory duty cycles that best represent the range of engine operation that defines a test interval for field-testing.

(C) You may develop and use your own combination of ECM signals to determine BSFC.

(iv) *Other ECM signals.* You may ask to use other ECM signals for determining brake-specific emissions, such as ECM fuel flow or ECM air flow. We must approve the use of such signals in advance.

(6) *Permissible deviations.* ECM signals may deviate from the specifications of this part 1065, but the expected deviation must not prevent you from demonstrating that you meet the applicable standards. For example, your emission results may be sufficiently below an applicable standard, such that the deviation would not significantly change the result. As another example, a very low engine-coolant temperature may define a logical statement that determines when a test interval may start. In this case, even if the ECM's sensor for detecting coolant temperature was not very accurate or repeatable, its output would never deviate so far as to significantly affect when a test interval may start.

§ 1065.920 PEMS Calibrations and verifications.

(a) *Subsystem calibrations and verifications.* Use all the applicable calibrations and verifications in subpart D of this part, including the linearity verifications in § 1065.307, to calibrate and verify PEMS. Note that a PEMS does not have to meet the system-response specifications of § 1065.308 if it meets the overall verification described in paragraph (b) of this section.

(b) *Overall verification.* We require only that you maintain a record showing that the particular make, model, and configuration of your PEMS meets this verification. We recommend that you generate your own record to show that your specific PEMS meets this verification, but you may also rely on data and other information from the PEMS manufacturer. If you upgrade or change the configuration of your PEMS, your record must show that your new configuration meets this verification. The verification consists of operating an engine over a duty cycle in the laboratory and statistically comparing data generated and recorded by the PEMS with data simultaneously generated and recorded by laboratory equipment as follows:

(1) Mount an engine on a dynamometer for laboratory testing. Prepare the laboratory and PEMS for emission testing, as described in this part, to get simultaneous measurements. We recommend selecting an engine with emission levels close to the applicable duty-cycle standards, if possible.

(2) Select or create a duty cycle that has all the following characteristics:

(i) Engine operation that represents normal in-use speeds, loads, and degree of transient activity. Consider using data from previous field tests to generate a cycle.

(ii) A duration of (20 to 40) min.

(iii) At least 50% of engine operating time must include at least 10 valid test intervals for calculating emission levels for field testing. For example, for highway compression-ignition engines, select a duty cycle in which at least 50% of the engine operating time can be used to calculate valid NTE events.

(3) Starting with a warmed-up engine, run a valid emission test with the duty cycle from paragraph (b)(2) of this section. The laboratory and PEMS must both meet applicable validation requirements, such as drift validation, hydrocarbon contamination validation, and proportional validation.

(4) Determine the brake-specific emissions for each test interval for both laboratory and the PEMS measurements, as follows:

(i) For both laboratory and PEMS measurements, use identical values to determine the beginning and end of each test interval.

(ii) For both laboratory and PEMS measurements, use identical values to determine total work over each test interval.

(iii) Apply any ''measurement allowance'' to the PEMS data. If the measurement allowance is normally added to the standard, subtract the measurement allowance from the PEMS brake-specific emission result.

(iv) Round results to the same number of significant digits as the standard.

(5) Repeat the engine duty cycle and calculations until you have at least 100 valid test intervals.

(6) For each test interval and emission, subtract the lab result from the PEMS result.

(7) If for each constituent, the PEMS passes this verification if any one of the following are true:

(i) 91% or more of the differences are zero or less than zero.

(ii) The entire set of test-interval results passes the 95% confidence alternate-procedure statistics for field testing (*t*-test and *F*-test) specified in subpart A of this part.

§ 1065.925 PEMS preparation for field testing.

Take the following steps to prepare PEMS for field testing:

(a) Verify that ambient conditions at the start of the test are within the limits specified in the standard-setting part. Continue to monitor these values to determine if ambient conditions exceed the limits during the test.

(b) Install a PEMS and any accessories needed to conduct a field test.

(c) Power the PEMS and allow pressures, temperatures, and flows to stabilize to their operating set points.

(d) Bypass or purge any gaseous sampling PEMS instruments with ambient air until sampling begins to prevent system contamination from excessive cold-start emissions.

(e) Conduct calibrations and verifications.

(f) Operate any PEMS dilution systems at their expected flow rates using a bypass.

(g) If you use a gravimetric balance to determine whether an engine meets an applicable PM standard, follow the procedures for PM sample preconditioning and tare weighing as described in § 1065.590. Operate the PM-sampling system at its expected flow rates using a bypass.

(h) Verify the amount of contamination in the PEMS HC sampling system as follows:

(1) Select the HC analyzers' ranges for measuring the maximum concentration expected at the HC standard.

(2) Zero the HC analyzers using a zero gas introduced at the analyzer port. When zeroing the FIDs, use the FIDs' burner air that would be used for in-use measurements (generally either ambient air or a portable source of burner air).

(3) Span the HC analyzers using span gas introduced at the analyzer port. When spanning the FIDs, use the FIDs' burner air that would be used in-use (for example, use ambient air or a portable source of burner air).

(4) Overflow zero air at the HC probe or into a fitting between the HC probe and the transfer line.

(5) Measure the HC concentration in the sampling system:

(i) For continuous sampling, record the mean HC concentration as overflow zero air flows.

(ii) For batch sampling, fill the sample medium and record its mean concentration.

(6) Record this value as the initial HC concentration, x_{HCinit}, and use it to correct measured values as described in § 1065.660.

(7) If the initial HC concentration exceeds the greater of the following values, determine the source of the contamination and take corrective action, such as purging the system or replacing contaminated portions:

(i) 2% of the flow-weighted mean concentration expected at the standard or measured during testing.

(ii) 2 μmol/mol.

(8) If corrective action does not resolve the deficiency, you use a contaminated HC system if it does not prevent you from demonstrating compliance with the applicable emission standards.

§ 1065.930 Engine starting, restarting, and shutdown.

Unless the standard-setting part specifies otherwise, start, restart, and shut down the test engine for field testing as follows:

(a) Start or restart the engine as described in the owners manual.

(b) If the engine does not start after 15 seconds of cranking, stop cranking and determine the reason it failed to start. However, you may crank the engine longer than 15 seconds, as long as the owners manual or the service-repair manual describes the longer cranking time as normal.

(c) Respond to engine stalling with the following steps:

(1) If the engine stalls during a required warm-up before emission sampling begins, restart the engine and continue warm-up.

(2) If the engine stalls at any other time after emission sampling begins, restart the engine and continue testing.

(d) Shut down and restart the engine according to the manufacturer's specifications, as needed during normal operation in-use, but continue emission sampling until the field test is complete.

§ 1065.935 Emission test sequence for field testing.

(a) Time the start of field testing as follows:

(1) If the standard-setting part requires only hot-stabilized emission measurements, operate the engine in-use until the engine coolant, block, or head absolute temperature is within ±10% of its mean value for the previous 2 min or until an engine thermostat controls engine temperature with coolant or air flow.

(2) If the standard-setting part requires hot-start emission measurements, shut down the engine after at least 2 min at the temperature tolerance specified in paragraph (a)(1) of this section. Start the field test within 20 min of engine shutdown.

(3) If the standard-setting part requires cold-start emission measurements, proceed to the steps specified in paragraph (b) of this section.

(b) Take the following steps before emission sampling begins:

(1) For batch sampling, connect clean storage media, such as evacuated bags or tare-weighed PM sample media.

(2) Operate the PEMS according to the instrument manufacturer's instructions and using good engineering judgment.

(3) Operate PEMS heaters, dilution systems, sample pumps, cooling fans, and the data-collection system.

(4) Pre-heat or pre-cool PEMS heat exchangers in the sampling system to within their tolerances for operating temperatures.

(5) Allow all other PEMS components such as sample lines, filters, and pumps to stabilize at operating temperature.

(6) Verify that no significant vacuum-side leak exists in the PEMS, as described in §1065.345.

(7) Adjust PEMS flow rates to desired levels, using bypass flow if applicable.

(8) Zero and span all PEMS gas analyzers using NIST-traceable gases that meet the specifications of §1065.750.

(c) Start testing as follows:

(1) Before the start of the first test interval, zero or re-zero any PEMS electronic integrating devices, as needed.

(2) If the engine is already running and warmed up and starting is not part of field testing, start the field test by simultaneously starting to sample exhaust, record engine and ambient data, and integrate measured values using a PEMS.

(3) If engine starting is part of field testing, start field testing by simultaneously starting to sample from the exhaust system, record engine and ambient data, and integrate measured values using a PEMS. Then start the engine.

(d) Continue the test as follows:

(1) Continue to sample exhaust, record data and integrate measured values throughout normal in-use operation of the engine.

(2) Between each test interval, zero or re-zero any electronic integrating devices, and reset batch storage media, as needed.

(3) The engine may be stopped and started, but continue to sample emissions throughout the entire field test.

(4) Conduct periodic verifications such as zero and span verifications on PEMS gas analyzers, as recommended by the PEMS manufacturer or as indicated by good engineering judgment. Results from these verifications will be used to calculate and correct for drift according to paragraph (g) of this section. Do not include data recorded during verifications in emission calculations.

(5) You may periodically condition and analyze batch samples in-situ, including PM samples; for example you may condition an inertial PM balance substrate if you use an inertial balance to measure PM.

(6) You may have personnel monitoring and adjusting the PEMS during a test, or you may operate the PEMS unattended.

(e) Stop testing as follows:

(1) Continue sampling as needed to get an appropriate amount of emission measurement, according to the standard setting part. If the standard-setting part does not describe when to stop sampling, develop a written protocol before you start testing to establish how you will stop sampling. You may not determine when to stop testing based on measured values.

(2) At the end of the field test, allow the sampling systems' response times to elapse and then stop sampling. Stop any integrators and indicate the end of the test cycle on the data-collection medium.

(3) You may shut down the engine before or after you stop sampling.

(f) For any proportional batch sample, such as a bag sample or PM sample, verify for each test interval whether or not proportional sampling was maintained according to §1065.545. Void the sample for any test interval that did not maintain proportional sampling according to §1065.545.

(g) Take the following steps after emission sampling is complete:

(1) As soon as practical after the emission sampling, analyze any gaseous batch samples.

(2) If you used dilution air, either analyze background samples or assume that background emissions were zero. Refer to § 1065.140 for dilution-air specifications.

(3) After quantifying all exhaust gases, record mean analyzer values after stabilizing a zero gas to each analyzer, then record mean analyzer values after stabilizing the span gas to the analyzer. Stabilization may include time to purge an analyzer of any sample gas, plus any additional time to account for analyzer response. Use these recorded values to correct for drift as described in § 1065.550.

(4) Invalidate any test intervals that do not meet the range criteria in § 1065.550. Note that it is acceptable that analyzers exceed 100% of their ranges when measuring emissions between test intervals, but not during test intervals. You do not have to retest an engine in the field if the range criteria are not met.

(5) Invalidate any test intervals that do not meet the drift criterion in § 1065.550. For test intervals that do meet the drift criterion, correct those test intervals for drift according to § 1065.672 and use the drift corrected results in emissions calculations.

(6) Unless you weighed PM in-situ, such as by using an inertial PM balance, place any used PM samples into covered or sealed containers and return them to the PM-stabilization environment and weigh them as described in § 1065.595.

§ 1065.940 Emission calculations.

Perform emission calculations as described in § 1065.650 to calculate brake-specific emissions for each test interval using any applicable information and instructions in the standard-setting part.

Subpart K—Definitions and Other Reference Information

§ 1065.1001 Definitions.

The definitions in this section apply to this part. The definitions apply to all subparts unless we note otherwise. All undefined terms have the meaning the Act gives them. The definitions follow:

300 series stainless steel means any stainless steel alloy with a Unified Numbering System for Metals and Alloys number designated from S30100 to S39000. For all instances in this part where we specify 300 series stainless steel, such parts must also have a smooth inner-wall construction. We recommend an average roughness, R_a, no greater than 4 μm.

Accuracy means the absolute difference between a reference quantity and the arithmetic mean of ten mean measurements of that quantity. Determine instrument accuracy, repeatability, and noise from the same data set. We specify a procedure for determining accuracy in § 1065.305.

Act means the Clean Air Act, as amended, 42 U.S.C. 7401–7671q.

Adjustable parameter means any device, system, or element of design that someone can adjust (including those which are difficult to access) and that, if adjusted, may affect emissions or engine performance during emission testing or normal in-use operation. This includes, but is not limited to, parameters related to injection timing and fueling rate. In some cases, this may exclude a parameter that is difficult to access if it cannot be adjusted to affect emissions without significantly degrading engine performance, or if it will not be adjusted in a way that affects emissions during in-use operation.

Aerodynamic diameter means the diameter of a spherical water droplet that settles at the same constant velocity as the particle being sampled.

Aftertreatment means relating to a catalytic converter, particulate filter, or any other system, component, or technology mounted downstream of the exhaust valve (or exhaust port) whose design function is to decrease emissions in the engine exhaust before it is exhausted to the environment. Exhaust-gas recirculation (EGR) and turbochargers are not aftertreatment.

Allowed procedures means procedures that we either specify in this part 1065 or in the standard-setting part or approve under § 1065.10.

Alternate procedures means procedures allowed under § 1065.10(c)(7).

Applicable standard means an emission standard to which an engine is subject; or a family emission limit to which an engine is certified under an emission credit program in the standard-setting part.

Aqueous condensation means the precipitation of water-containing constituents from a gas phase to a liquid phase. Aqueous condensation is a function of humidity, pressure, temperature, and concentrations of other constituents such as sulfuric acid. These parameters vary as a function of engine intake-air humidity, dilution-air humidity, engine air-to-fuel ratio, and fuel composition—including the amount of hydrogen and sulfur in the fuel.

Atmospheric pressure means the wet, absolute, atmospheric static pressure. Note that if you measure atmospheric pressure in a duct, you must ensure that there are negligible pressure losses between the atmosphere and your measurement location, and you must account for changes in the duct's static pressure resulting from the flow.

Auto-ranging means a gas analyzer function that automatically changes the analyzer digital resolution to a larger range of concentrations as the concentration approaches 100% of the analyzer's current range. Auto-ranging does not mean changing an analog amplifier gain within an analyzer.

Auxiliary emission-control device means any element of design that senses temperature, motive speed, engine RPM, transmission gear, or any other parameter for the purpose of activating, modulating, delaying, or deactivating the operation of any part of the emission-control system.

Brake power has the meaning given in the standard-setting part. If it is not defined in the standard-setting part, brake power means the usable power output of the engine, not including power required to fuel, lubricate, or heat the engine, circulate coolant to the engine, or to operate aftertreatment devices. If the engine does not power these accessories during a test, subtract the work required to perform these functions from the total work used in brake-specific emission calculations. Subtract engine fan work from total work only for air-cooled engines.

C_1 equivalent (or basis) means a convention of expressing HC concentrations based on the total number of carbon atoms present, such that the C_1 equivalent of a molar HC concentration equals the molar concentration multiplied by the mean number of carbon atoms in each HC molecule. For example, the C_1 equivalent of 10 μmol/mol of propane (C_3H_8) is 30 μmol/mol. C_1 equivalent molar values may be denoted as ''ppmC'' in the standard-setting part.

Calibration means the process of setting a measurement system's response so that its output agrees with a range of reference signals. Contrast with ''verification''.

Certification means relating to the process of obtaining a certificate of conformity for an engine family that complies with the emission standards and requirements in the standard-setting part.

Compression-ignition means relating to a type of reciprocating, internal-combustion engine that is not a spark-ignition engine.

Confidence interval means the range associated with a probability that a quantity will be considered statistically equivalent to a reference quantity.

Constant-speed engine means an engine whose certification is limited to constant-speed operation. Engines whose constant-speed governor function is removed or disabled are no longer constant-speed engines.

Constant-speed operation means engine operation with a governor that automatically controls the operator demand to maintain engine speed, even under changing load. Governors do not always maintain speed exactly constant. Typically speed can decrease (0.1 to 10)% below the speed at zero load, such that the minimum speed occurs near the engine's point of maximum power.

Coriolis meter means a flow-measurement instrument that determines the mass flow of a fluid by sensing the vibration and twist of specially designed flow tubes as the flow passes through them. The twisting characteristic is called the Coriolis effect. According to

Newton's Second Law of Motion, the amount of sensor tube twist is directly proportional to the mass flow rate of the fluid flowing through the tube. See § 1065.220.

Designated Compliance Officer means the Manager, Engine Programs Group (6405–J), U.S. Environmental Protection Agency, 1200 Pennsylvania Ave., NW., Washington, DC 20460.

Dewpoint means a measure of humidity stated as the equilibrium temperature at which water condenses under a given pressure from moist air with a given absolute humidity. Dewpoint is specified as a temperature in °C or K, and is valid only for the pressure at which it is measured. See § 1065.645 to determine water vapor mole fractions from dewpoints using the pressure at which the dewpoint is measured.

Discrete-mode means relating to a discrete-mode type of steady-state test, as described in the standard-setting part.

Dispersion means either:

(1) The broadening and lowering of a signal due to any fluid capacitance, fluid mixing, or electronic filtering in a sampling system. (Note: To adjust a signal so its dispersion matches that of another signal, you may adjust the system's fluid capacitance, fluid mixing, or electronic filtering.)

(2) The mixing of a fluid, especially as a result of fluid mechanical forces or chemical diffusion.

Drift means the difference between a zero or calibration signal and the respective value reported by a measurement instrument immediately after it was used in an emission test, as long as you zeroed and spanned the instrument just before the test.

Duty cycle means a series of speed and torque values (or power values) that an engine must follow during a laboratory test. Duty cycles are specified in the standard-setting part. A single duty cycle may consist of one or more test intervals. For example, a duty cycle may be a ramped-modal cycle, which has one test interval; a cold-start plus hot-start transient cycle, which has two test intervals; or a discrete-mode cycle, which has one test interval for each mode.

Electronic control module means an engine's electronic device that uses data from engine sensors to control engine parameters.

Emission-control system means any device, system, or element of design that controls or reduces the emissions of regulated pollutants from an engine.

Emission-data engine means an engine that is tested for certification. This includes engines tested to establish deterioration factors.

Emission-related maintenance means maintenance that substantially affects emissions or is likely to substantially affect emission deterioration.

Engine means an engine to which this part applies.

Engine family means a group of engines with similar emission characteristics throughout the useful life, as specified in the standard-setting part.

Engine governed speed means the engine operating speed when it is controlled by the installed governor.

Exhaust-gas recirculation means a technology that reduces emissions by routing exhaust gases that had been exhausted from the combustion chamber(s) back into the engine to be mixed with incoming air before or during combustion. The use of valve timing to increase the amount of residual exhaust gas in the combustion chamber(s) that is mixed with incoming air before or during combustion is not considered exhaust-gas recirculation for the purposes of this part.

Fall time, t_{90-10}, means the time interval of a measurement instrument's response after any step decrease to the input between the following points:

(1) The point at which the response has fallen 10% of the total amount it will fall in response to the step change.

(2) The point at which the response has fallen 90% of the total amount it will fall in response to the step change.

Flow-weighted mean means the mean of a quantity after it is weighted proportional to a corresponding flow rate. For example, if a gas concentration is measured continuously from the raw exhaust of an engine, its flow-weighted mean concentration is the sum of the products of each recorded concentration times its respective exhaust flow rate, divided by the sum of the recorded flow rates. As another example, the bag concentration from a CVS system is the same as the flow-weighted

mean concentration, because the CVS system itself flow-weights the bag concentration.

Fuel type means a general category of fuels such as gasoline or LPG. There can be multiple grades within a single type of fuel, such as all-season and winter-grade gasoline.

Good engineering judgment means judgments made consistent with generally accepted scientific and engineering principles and all available relevant information. See 40 CFR 1068.5 for the administrative process we use to evaluate good engineering judgment.

HEPA filter means high-efficiency particulate air filters that are rated to achieve a minimum initial particle-removal efficiency of 99.97% using ASTM F 1471–93 (incorporated by reference in § 1065.1010).

Hydraulic diameter means the diameter of a circle whose area is equal to the area of a noncircular cross section of tubing, including its wall thickness. The wall thickness is included only for the purpose of facilitating a simplified and nonintrusive measurement.

Hydrocarbon (HC) means THC, THCE, NMHC, or NMHCE, as applicable. Hydrocarbon generally means the hydrocarbon group on which the emission standards are based for each type of fuel and engine.

Identification number means a unique specification (for example, a model number/serial number combination) that allows someone to distinguish a particular engine from other similar engines.

Idle speed means the lowest engine speed with minimum load (greater than or equal to zero load), where an engine governor function controls engine speed. For engines without a governor function that controls idle speed, idle speed means the manufacturer-declared value for lowest engine speed possible with minimum load. Note that warm idle speed is the idle speed of a warmed-up engine.

Intermediate test speed has the meaning given in § 1065.610.

Linearity means the degree to which measured values agree with respective reference values. Linearity is quantified using a linear regression of pairs of measured values and reference values over a range of values expected or observed during testing. Perfect linearity would result in an intercept, a_0, equal to zero, a slope, a_1, of one, a coefficient of determination, r^2, of one, and a standard error of the estimate, *SEE*, of zero. The term ''linearity'' is not used in this part to refer to the shape of a measurement instrument's unprocessed response curve, such as a curve relating emission concentration to voltage output. A properly performing instrument with a nonlinear response curve will meet linearity specifications.

Manufacturer has the meaning given in section 216(1) of the Act. In general, this term includes any person who manufactures an engine or vehicle for sale in the United States or otherwise introduces a new nonroad engine into commerce in the United States. This includes importers who import engines or vehicles for resale.

Maximum test speed has the meaning given in § 1065.610.

Maximum test torque has the meaning given in § 1065.610.

NIST-traceable means relating to a standard value that can be related to NIST-stated references through an unbroken chain of comparisons, all having stated uncertainties, as specified in NIST Technical Note 1297 (incorporated by reference in § 1065.1010). Allowable uncertainty limits specified for NIST-traceability refer to the propagated uncertainty specified by NIST. You may ask to use other internationally recognized standards that are equivalent to NIST standards.

Noise means the precision of 30 seconds of updated recorded values from a measurement instrument as it quantifies a zero or reference value. Determine instrument noise, repeatability, and accuracy from the same data set. We specify a procedure for determining noise in § 1065.305.

Nonmethane hydrocarbons (NMHC) means the sum of all hydrocarbon species except methane. Refer to § 1065.660 for NMHC determination.

Nonmethane hydrocarbon equivalent (NMHCE) means the sum of the carbon mass contributions of non-oxygenated nonmethane hydrocarbons, alcohols and aldehydes, or other organic compounds that are measured separately as

contained in a gas sample, expressed as exhaust nonmethane hydrocarbon from petroleum-fueled engines. The hydrogen-to-carbon ratio of the equivalent hydrocarbon is 1.85:1.

Nonroad means relating to nonroad engines.

Nonroad engine has the meaning we give in 40 CFR 1068.30. In general this means all internal-combustion engines except motor vehicle engines, stationary engines, engines used solely for competition, or engines used in aircraft.

Open crankcase emissions means any flow from an engine's crankcase that is emitted directly into the environment. Crankcase emissions are not ''open crankcase emissions'' if the engine is designed to always route all crankcase emissions back into the engine (for example, through the intake system or an aftertreatment system) such that all the crankcase emissions, or their products, are emitted into the environment only through the engine exhaust system.

Operator demand means an engine operator's input to control engine output. The ''operator'' may be a person (i.e., manual), or a governor (i.e., automatic) that mechanically or electronically signals an input that demands engine output. Input may be from an accelerator pedal or signal, a throttle-control lever or signal, a fuel lever or signal, a speed lever or signal, or a governor setpoint or signal. Output means engine power, P, which is the product of engine speed, f_n, and engine torque, T.

Oxides of nitrogen means compounds containing only nitrogen and oxygen as measured by the procedures specified in this part, except as specified in the standard-setting part. Oxides of nitrogen are expressed quantitatively as if the NO is in the form of NO_2, such that you use an effective molar mass for all oxides of nitrogen equivalent to that of NO_2.

Oxygenated fuels means fuels composed of oxygen-containing compounds, such as ethanol or methanol. Testing engines that use oxygenated fuels generally requires the use of the sampling methods in subpart I of this part. However, you should read the standard-setting part and subpart I of this part to determine appropriate sampling methods.

Partial pressure means the pressure, p, attributable to a single gas in a gas mixture. For an ideal gas, the partial pressure divided by the total pressure is equal to the constituent's molar concentration, x.

Percent (%) means a representation of exactly 0.01. Significant digits for the product of % and another value are defined as follows:

(1) Where we specify some percentage of a total value, the calculated value has the same number of significant digits as the total value. For example, 2% is exactly 0.02 and 2% of 101.3302 equals 2.026604.

(2) In other cases, determine the number of significant digits using the same method as you would use for determining the number of significant digits of a fractional value.

Portable emission measurement system (PEMS) means a measurement system consisting of portable equipment that can be used to generate brake-specific emission measurements during field testing or laboratory testing.

Precision means two times the standard deviation of a set of measured values of a single zero or reference quantity.

Procedures means all aspects of engine testing, including the equipment specifications, calibrations, calculations and other protocols and specifications needed to measure emissions, unless we specify otherwise.

Proving ring is a device used to measure static force based on the linear relationship between stress and strain in an elastic material. It is typically a steel alloy ring, and you measure the deflection (strain) of its diameter when a static force (stress) is applied across its diameter.

PTFE means polytetrafluoroethylene, commonly known as Teflon™.

Ramped-modal means relating to a ramped-modal type of steady-state test, as described in the standard-setting part.

Regression statistics means any of the set of statistics specified in §1065.602(i) through (l).

Repeatability means the precision of ten mean measurements of a reference

quantity. Determine instrument repeatability, accuracy, and noise from the same data set. We specify a procedure for determining repeatability in § 1065.305.

Revoke has the meaning given in 40 CFR 1068.30.

Rise time, t_{10-90}, means the time interval of a measurement instrument's response after any step increase to the input between the following points:

(1) The point at which the response has risen 10% of the total amount it will rise in response to the step change.

(2) The point at which the response has risen 90% of the total amount it will rise in response to the step change.

Roughness (or average roughness, R_a*)* means the size of finely distributed vertical surface deviations from a smooth surface, as determined when traversing a surface. It is an integral of the absolute value of the roughness profile measured over an evaluation length.

Round means to round numbers according to NIST SP 811 (incorporated by reference in § 1065.1010), unless otherwise specified.

Scheduled maintenance means adjusting, repairing, removing, disassembling, cleaning, or replacing components or systems periodically to keep a part or system from failing, malfunctioning, or wearing prematurely. It also may mean actions you expect are necessary to correct an overt indication of failure or malfunction for which periodic maintenance is not appropriate.

Shared atmospheric pressure meter means an atmospheric pressure meter whose output is used as the atmospheric pressure for an entire test facility that has more than one dynamometer test cell.

Shared humidity measurement means a humidity measurement that is used as the humidity for an entire test facility that has more than one dynamometer test cell.

Span means to adjust an instrument so that it gives a proper response to a calibration standard that represents between 75% and 100% of the maximum value in the instrument range or expected range of use.

Spark-ignition means relating to a gasoline-fueled engine or any other type of engine with a spark plug (or other sparking device) and with operating characteristics significantly similar to the theoretical Otto combustion cycle. Spark-ignition engines usually use a throttle to regulate intake air flow to control power during normal operation.

Special procedures means procedures allowed under § 1065.10(c)(2).

Specified procedures means procedures we specify in this part 1065 or the standard-setting part. Other procedures allowed or required by § 1065.10(c) are not specified procedures.

Standard deviation has the meaning given in § 1065.602. Note this is the standard deviation for a non-biased sample.

Standard-setting part means the part in the Code of Federal Regulations that defines emission standards for a particular engine. See § 1065.1(a).

Steady-state means relating to emission tests in which engine speed and load are held at a finite set of nominally constant values. Steady-state tests are either discrete-mode tests or ramped-modal tests.

Stoichiometric means relating to the particular ratio of air and fuel such that if the fuel were fully oxidized, there would be no remaining fuel or oxygen. For example, stoichiometric combustion in a gasoline-fueled engine typically occurs at an air-to-fuel mass ratio of about 14.7:1.

Storage medium means a particulate filter, sample bag, or any other storage device used for batch sampling.

Test engine means an engine in a test sample.

Test interval means a duration of time over which you determine brake-specific emissions. For example, the standard-setting part may specify a complete laboratory duty cycle as a cold-start test interval, plus a hot-start test interval. As another example, a standard-setting part may specify a field-test interval, such as a ''not-to-exceed'' (NTE) event, as a duration of time over which an engine operates within a certain range of speed and torque. In cases where multiple test intervals occur over a duty cycle, the standard-setting part may specify additional calculations that weight and combine results to arrive at composite

values for comparison against the applicable standards.

Test sample means the collection of engines selected from the population of an engine family for emission testing.

Tolerance means the interval in which 95% of a set of recorded values of a certain quantity must lie, with the remaining 5% of the recorded values deviating from the tolerance interval only due to measurement variability. Use the specified recording frequencies and time intervals to determine if a quantity is within the applicable tolerance. For parameters not subject to measurement variability, tolerance means an absolute allowable range.

Total hydrocarbon (THC) means the combined mass of organic compounds measured by the specified procedure for measuring total hydrocarbon, expressed as a hydrocarbon with a hydrogen-to-carbon mass ratio of 1.85:1.

Total hydrocarbon equivalent (THCE) means the sum of the carbon mass contributions of non-oxygenated hydrocarbons, alcohols and aldehydes, or other organic compounds that are measured separately as contained in a gas sample, expressed as exhaust hydrocarbon from petroleum-fueled engines. The hydrogen-to-carbon ratio of the equivalent hydrocarbon is 1.85:1.

United States means the States, the District of Columbia, the Commonwealth of Puerto Rico, the Commonwealth of the Northern Mariana Islands, Guam, American Samoa, and the U.S. Virgin Islands.

Useful life means the period during which a new engine is required to comply with all applicable emission standards. The standard-setting part defines the specific useful-life periods for individual engines.

Variable-speed engine means an engine that is not a constant-speed engine.

Vehicle means any vehicle, vessel, or type of equipment using engines to which this part applies. For purposes of this part, the term ''vehicle'' may include nonmotive machines or equipment such as a pump or generator.

Verification means to evaluate whether or not a measurement system's outputs agree with a range of applied reference signals to within one or more predetermined thresholds for acceptance. Contrast with ''calibration''.

We (us, our) means the Administrator of the Environmental Protection Agency and any authorized representatives.

Zero means to adjust an instrument so it gives a zero response to a zero calibration standard, such as purified nitrogen or purified air for measuring concentrations of emission constituents.

Zero gas means a gas that yields a zero response in an analyzer. This may either be purified nitrogen, purified air, a combination of purified air and purified nitrogen. For field testing, *zero gas* may include ambient air.

§ 1065.1005 Symbols, abbreviations, acronyms, and units of measure.

The procedures in this part generally follow the International System of Units (SI), as detailed in NIST Special Publication 811, 1995 Edition, ''Guide for the Use of the International System, of Units (SI),'' which we incorporate by reference in § 1065.1010. See § 1065.25 for specific provisions related to these conventions. This section summarizes the way we use symbols, units of measure, and other abbreviations.

(a) *Symbols for quantities.* This part uses the following symbols and units of measure for various quantities:

Symbol	Quantity	Unit	Unit symbol	Base SI units
%	percent	0.01	%	10^{-2}
α	atomic hydrogen to carbon ratio	mole per mole	mol/mol	1
A	area	square meter	m^2	m^2
a_0	intercept of least squares regression.			
a_1	slope of least squares regression.			
β	ratio of diameters	meter per meter	m/m	1
β	atomic oxygen to carbon ratio	mole per mole	mol/mol	1
$C^{\#}$	number of carbon atoms in a molecule.			
D	diameter	meter	m	m
DF	dilution air fraction	mole per mol	mol/mol	1
ε	error between a quantity and its reference.			
e	brake-specific basis	gram per kilowatt hour.	g/(kW·h)	$g \cdot 3.6^{-1} \cdot 10^{6} \cdot m^{-2} \cdot kg \cdot s^{2}$

Symbol	Quantity	Unit	Unit symbol	Base SI units
F	F-test statistic.			
f	frequency	hertz	Hz	s^{-1}
f_n	rotational frequency (shaft)	revolutions per minute.	rev/min	$2 \cdot pi \cdot 60^{-1} \cdot s^{-1}$
γ	ratio of specific heats	(joule per kilogram kelvin) per (joule per kilogram kelvin).	(J/(kg·K))/(J/(kg·K))	1
K	correction factor			1
l	length	meter	m	m
μ	viscosity, dynamic	pascal second	Pa·s	$m^{-1} \cdot kg \cdot s^{-1}$
M	molar mass[1]	gram per mole	g/mol	$10^{-3} \cdot kg \cdot mol^{-1}$
m	mass	kilogram	kg	kg
$\dot{m}$	mass rate	kilogram per second.	kg/s	$kg \cdot s^{-1}$
μ	viscosity, kinematic	meter squared per second.	m^2/s	$m^2 \cdot s^{-1}$
N	total number in series.			
n	amount of substance	mole	mol	mol
$\dot{n}$	amount of substance rate	mole per second	mol/s	$mol \cdot s^{-1}$
P	power	kilowatt	kW	$10^3 \cdot m^2 \cdot kg \cdot s^{-3}$
PF	penetration fraction.			
p	pressure	pascal	Pa	$m^{-1} \cdot kg \cdot s^{-2}$
ρ	mass density	kilogram per cubic meter.	kg/m^3	$kg \cdot m^{-3}$
r	ratio of pressures	pascal per pascal	Pa/Pa	1
r^2	coefficient of determination.			
R_a	average surface roughness	micrometer	µm	m^{-6}
$Re^{\#}$	Reynolds number.			
RF	response factor.			
σ	non-biased standard deviation.			
SEE	standard estimate of error.			
T	absolute temperature	kelvin	K	K
T	Celsius temperature	degree Celsius	°C	K − 273.15
T	torque (moment of force)	newton meter	N·m	$m^2 \cdot kg \cdot s^{-2}$
t	time	second	s	s
Δt	time interval, period, 1/frequency	second	s	s
V	volume	cubic meter	m^3	m^3
$\dot{V}$	volume rate	cubic meter per second.	m^3/s	$m^3 \cdot s^{-1}$
W	work	kilowatt hour	kW·h	$3.6 \cdot 10^{-6} \cdot m^2 \cdot kg \cdot s^{-2}$
x	amount of substance mole fraction[2]	mole per mole	mol/mol	1
$\bar{x}$	flow-weighted mean concentration	mole per mole	mol/mol	1
y	generic variable.			

[1] See paragraph (f)(2) of this section for the values to use for molar masses. Note that in the cases of NO_X and HC, the regulations specify effective molar masses based on assumed speciation rather than actual speciation.
[2] Note that mole fractions for THC, THCE, NMHC, NMHCE, and NOTHC are expressed on a C_1 equivalent basis.

(b) *Symbols for chemical species.* This part uses the following symbols for chemical species and exhaust constituents:

Symbol	Species
Ar	argon.
C	carbon.
CH_4	methane.
C_2H_6	ethane.
C_3H_8	propane.
C_4H_{10}	butane
C_5H_{12}	pentane.
CO	carbon monoxide.
CO_2	carbon dioxide.
H	atomic hydrogen
H_2	molecular hydrogen.
H_2O	water.
He	helium.
^{85}Kr	krypton 85.
N_2	molecular nitrogen.
NMHC	nonmethane hydrocarbon.
NMHCE	nonmethane hydrocarbon equivalent.
NO	nitric oxide.
NO_2	nitrogen dioxide.
NO_X	oxides of nitrogen.
NOTHC	nonoxygenated hydrocarbon.
O_2	molecular oxygen.
OHC	oxygenated hydrocarbon.
^{210}Po	polonium 210.
PM	particulate mass.
S	sulfur.
THC	total hydrocarbon.
ZrO_2	zirconium dioxide.

(c) *Prefixes.* This part uses the following prefixes to define a quantity:

Symbol	Quantity	Value
µ	micro	10^{-6}
m	milli	10^{-3}
c	centi	10^{-2}

Symbol	Quantity	Value
k	kilo	10^3
M	mega	10^6

(d) *Superscripts.* This part uses the following superscripts to define a quantity:

Superscript	Quantity
overbar (such as $\bar{y}$)	arithmetic mean.
overdot (such as $\dot{y}$)	quantity per unit time.

(e) *Subscripts.* This part uses the following subscripts to define a quantity:

Subscript	Quantity
abs	absolute quantity.
act	actual condition.
air	air, dry
atmos	atmospheric.
cal	calibration quantity.
CFV	critical flow venturi.
cor	corrected quantity.
dil	dilution air.
dexh	diluted exhaust.
exh	raw exhaust.
exp	expected quantity.
i	an individual of a series.
idle	condition at idle.
in	quantity in.
init	initial quantity, typically before an emission test.
j	an individual of a series.
max	the maximum (i.e., peak) value expected at the standard over a test interval; not the maximum of an instrument range.
meas	measured quantity.
out	quantity out.
part	partial quantity.
PDP	positive-displacement pump.
ref	reference quantity.
rev	revolution.
sat	saturated condition.
slip	PDP slip.
span	span quantity.
SSV	subsonic venturi.
std	standard condition.
test	test quantity.
uncor	uncorrected quantity.
zero	zero quantity.

(f) *Constants.* (1) This part uses the following constants for the composition of dry air:

Symbol	Quantity	mol/mol
x_{Arair}	amount of argon in dry air	0.00934
x_{CO2air}	amount of carbon dioxide in dry air.	0.000375
x_{N2air}	amount of nitrogen in dry air	0.78084
x_{O2air}	amount of oxygen in dry air	0.209445

(2) This part uses the following molar masses or effective molar masses of chemical species:

Symbol	Quantity	g/mol (10^{-3}·kg·mol^{-1})
M_{air}	molar mass of dry air [1]	28.96559
M_{Ar}	molar mass of argon	39.948
M_C	molar mass of carbon	12.0107
M_{CO}	molar mass of carbon monoxide.	28.0101
M_{CO2}	molar mass of carbon dioxide.	44.0095
M_H	molar mass of atomic hydrogen.	1.00794
M_{H2}	molar mass of molecular hydrogen.	2.01588
M_{H2O}	molar mass of water	18.01528
M_{He}	molar mass of helium	4.002602
M_N	molar mass of atomic nitrogen.	14.0067
M_{N2}	molar mass of molecular nitrogen.	28.0134
M_{NMHC}	effective molar mass of non-methane hydrocarbon [2].	13.875389
M_{NMHCE}	effective molar mass of non-methane equivalent hydrocarbon [2].	13.875389
M_{NOX}	effective molar mass of oxides of nitrogen [3].	46.0055
M_O	molar mass of atomic oxygen.	15.9994
M_{O2}	molar mass of molecular oxygen.	31.9988
M_{C3H8}	molar mass of propane	44.09562
M_S	molar mass of sulfur	32.065
M_{THC}	effective molar mass of total hydrocarbon [2].	13.875389
M_{THCE}	effective molar mass of total hydrocarbon equivalent [2].	13.875389

[1] See paragraph (f)(1) of this section for the composition of dry air.
[2] The effective molar masses of THC, THCE, NMHC, and NMHCE are defined by an atomic hydrogen-to-carbon ratio, α, of 1.85.
[3] The effective molar mass of NO_X is defined by the molar mass of nitrogen dioxide, NO_2.

(3) This part uses the following molar gas constant for ideal gases:

Symbol	Quantity	J/(mol) · K) (m^2·kg·s^{-2} mol^{-1}· K^{-1})
R	molar gas constant	8.314472

(4) This part uses the following ratios of specific heats for dilution air and diluted exhaust:

Symbol	Quantity	[J/(kg·K)]/[J/(kg·K)]
γ_{air}	ratio of specific heats for intake air or dilution air.	1.399
γ_{dil}	ratio of specific heats for diluted exhaust.	1.399
γ_{exh}	ratio of specific heats for raw exhaust.	1.385

(g) *Other acronyms and abbreviations.* This part uses the following additional abbreviations and acronyms:

ASTM	American Society for Testing and Materials.
BMD	bag mini-diluter.
BSFC	brake-specific fuel consumption.
CARB	California Air Resources Board.

CFR	Code of Federal Regulations.
CFV	critical-flow venturi.
CI	compression-ignition.
CLD	chemiluminescent detector.
CVS	constant-volume sampler.
DF	deterioration factor.
ECM	electronic control module.
EFC	electronic flow control.
EGR	exhaust gas recirculation.
EPA	Environmental Protection Agency.
FID	flame-ionization detector.
IBP	initial boiling point.
ISO	International Organization for Standardization.
LPG	liquefied petroleum gas.
NDIR	nondispersive infrared.
NDUV	nondispersive ultraviolet.
NIST	National Institute for Standards and Technology.
PDP	positive-displacement pump.
PEMS	portable emission measurement system.
PFD	partial-flow dilution.
PMP	Polymethylpentene.
pt.	a single point at the mean value expected at the standard.
PTFE	polytetrafluoroethylene (commonly known as Teflon™).
RE	rounding error.
RMC	ramped-modal cycle.
RMS	root-mean square.
RTD	resistive temperature detector.
SSV	subsonic venturi.
SI	spark-ignition.
UCL	upper confidence limit.
UFM	ultrasonic flow meter.
U.S.C.	United States Code.

§ 1065.1010 Reference materials.

Documents listed in this section have been incorporated by reference into this part. The Director of the Federal Register approved the incorporation by reference as prescribed in 5 U.S.C. 552(a) and 1 CFR part 51. Anyone may inspect copies at the U.S. EPA, Air and Radiation Docket and Information Center, 1301 Constitution Ave., NW., Room B102, EPA West Building, Washington, DC 20460 or at the National Archives and Records Administration (NARA). For information on the availability of this material at NARA, call 202–741–6030, or go to: *http://www.archives.gov/federal_register/code_of_federal_regulations/ibr_locations.html.*

(a) *ASTM material.* Table 1 of this section lists material from the American Society for Testing and Materials that we have incorporated by reference. The first column lists the number and name of the material. The second column lists the sections of this part where we reference it. Anyone may purchase copies of these materials from the American Society for Testing and Materials, 100 Barr Harbor Dr., P.O. Box C700, West Conshohocken, PA 19428 or *www.astm.com*. Table 1 follows:

TABLE 1 OF § 1065.1010—ASTM MATERIALS

Document number and name	Part 1065 reference
ASTM D 86–04b, Standard Test Method for Distillation of Petroleum Products at Atmospheric Pressure	1065.703, 1065.710
ASTM D 93–02a, Standard Test Methods for Flash Point by Pensky-Martens Closed Cup Tester	1065.703
ASTM D 287 92 (Reapproved 2000), Standard Test Method for API Gravity of Crude Petroleum and Petroleum Products (Hydrometer Method)	1065.703
ASTM D 323–99a, Standard Test Method for Vapor Pressure of Petroleum Products (Reid Method)	1065.710
ASTM D 445–04, Standard Test Method for Kinematic Viscosity of Transparent and Opaque Liquids (and the Calculation of Dynamic Viscosity)	1065.703
ASTM D 613–03b, Standard Test Method for Cetane Number of Diesel Fuel Oil	1065.703
ASTM D 910–04a, Standard Specification for Aviation Gasolines	1065.701
ASTM D 975–04c, Standard Specification for Diesel Fuel Oils	1065.701
ASTM D 1266–98 (Reapproved 2003), Standard Test Method for Sulfur in Petroleum Products (Lamp Method)	1065.710
ASTM D 1267–02, Standard Test Method for Gage Vapor Pressure of Liquefied Petroleum (LP) Gases (LP-Gas Method)	1065.720
ASTM D 1319–03, Standard Test Method for Hydrocarbon Types in Liquid Petroleum Products by Fluorescent Indicator Adsorption	1065.710
ASTM D 1655–04a, Standard Specification for Aviation Turbine Fuels	1065.701
ASTM D 1837–02a, Standard Test Method for Volatility of Liquefied Petroleum (LP) Gases	1065.720
ASTM D 1838–03, Standard Test Method for Copper Strip Corrosion by Liquefied Petroleum (LP) Gases	1065.720
ASTM D 1945–03, Standard Test Method for Analysis of Natural Gas by Gas Chromatography	1065.715
ASTM D 2158–04, Standard Test Method for Residues in Liquefied Petroleum (LP) Gases	1065.720
ASTM D 2163–91 (Reapproved 1996), Standard Test Method for Analysis of Liquefied Petroleum (LP) Gases and Propene Concentrates by Gas Chromatography	1065.720
ASTM D 2598–02, Standard Practice for Calculation of Certain Physical Properties of Liquefied Petroleum (LP) Gases from Compositional Analysis	1065.720
ASTM D 2622–03, Standard Test Method for Sulfur in Petroleum Products by Wavelength Dispersive X-ray Fluorescence Spectrometry	1065.703
ASTM D 2713–91 (Reapproved 2001), Standard Test Method for Dryness of Propane (Valve Freeze Method)	1065.720

TABLE 1 OF § 1065.1010—ASTM MATERIALS—Continued

Document number and name	Part 1065 reference
ASTM D 2784–98 (Reapproved 2003), Standard Test Method for Sulfur in Liquefied Petroleum Gases (Oxy-Hydrogen Burner or Lamp)	1065.720
ASTM D 2880–03, Standard Specification for Gas Turbine Fuel Oils	1065.701
ASTM D 2986–95a (Reapproved 1999), Standard Practice for Evaluation of Air Assay Media by the Monodisperse DOP (Dioctyl Phthalate) Smoke Test	1065.170
ASTM D 3231–02, Standard Test Method for Phosphorus in Gasoline	1065.710
ASTM D 3237–02, Standard Test Method for Lead in Gasoline By Atomic Absorption Spectroscopy	1065.710
ASTM D 4814–04b, Standard Specification for Automotive Spark-Ignition Engine Fuel	1065.701
ASTM D 5186–03, Standard Test Method for Determination of the Aromatic Content and Polynuclear Aromatic Content of Diesel Fuels and Aviation Turbine Fuels By Supercritical Fluid Chromatography	1065.703
ASTM D 5797–96 (Reapproved 2001), Standard Specification for Fuel Methanol (M70–M85) for Automotive Spark-Ignition Engines	1065.701
ASTM D 5798–99 (Reapproved 2004), Standard Specification for Fuel Ethanol (Ed75–Ed85) for Automotive Spark-Ignition Engines	1065.701
ASTM D 6615–04a, Standard Specification for Jet B Wide-Cut Aviation Turbine Fuel	1065.701
ASTM D 6751–03a, Standard Specification for Biodiesel Fuel Blend Stock (B100) for Middle Distillate Fuels	1065.701
ASTM D 6985–04a, Standard Specification for Middle Distillate Fuel Oil Military Marine Applications	1065.701
ASTM F 1471–93 (Reapproved 2001), Standard Test Method for Air Cleaning Performance of a High-Efficiency Particulate Air Filter System	1065.1001

(b) *ISO material.* Table 2 of this section lists material from the International Organization for Standardization that we have incorporated by reference. The first column lists the number and name of the material. The second column lists the section of this part where we reference it. Anyone may purchase copies of these materials from the International Organization for Standardization, Case Postale 56, CH–1211 Geneva 20, Switzerland or *www.iso.org.* Table 2 follows:

TABLE 2 OF § 1065.1010—ISO MATERIALS

Document number and name	Part 1065 reference
ISO 14644–1, Cleanrooms and associated controlled environments	1065.190

(c) *NIST material.* Table 3 of this section lists material from the National Institute of Standards and Technology that we have incorporated by reference. The first column lists the number and name of the material. The second column lists the section of this part where we reference it. Anyone may purchase copies of these materials from the Government Printing Office, Washington, DC 20402 or download them free from the Internet at *www.nist.gov.* Table 3 follows:

TABLE 3 OF § 1065.1010. NIST MATERIALS

Document number and name	Part 1065 reference
NIST Special Publication 811, 1995 Edition, Guide for the Use of the International System of Units (SI), Barry N. Taylor, Physics Laboratory	1065.20, 1065.1001, 1065.1005
NIST Technical Note 1297, 1994 Edition, Guidelines for Evaluating and Expressing the Uncertainty of NIST Measurement Results, Barry N. Taylor and Chris E. Kuyatt	1065.1001

(d) *SAE material.* Table 4 of this section lists material from the Society of Automotive Engineering that we have incorporated by reference. The first column lists the number and name of the material. The second column lists the sections of this part where we reference it. Anyone may purchase copies of these materials from the Society of

Automotive Engineers, 400 Commonwealth Drive, Warrendale, PA 15096 or *www.sae.org.* Table 4 follows:

TABLE 4 OF § 1065.1010. SAE MATERIALS

Document number and name	Part 1065 reference
''Optimization of Flame Ionization Detector for Determination of Hydrocarbon in Diluted Automotive Exhausts,'' Reschke Glen D., SAE 770141	1065.360
''Relationships Between Instantaneous and Measured Emissions in Heavy Duty Applications,'' Ganesan B. and Clark N. N., West Virginia University, SAE 2001–01–3536	1065.309

(e) *California Air Resources Board material.* Table 5 of this section lists material from the California Air Resources Board that we have incorporated by reference. The first column lists the number and name of the material. The second column lists the sections of this part where we reference it. Anyone may get copies of these materials from the California Air Resources Board 9528 Telstar Ave., El Monte, California 91731. Table 5 follows:

TABLE 5 OF § 1065.1010. CALIFORNIA AIR RESOURCES BOARD MATERIALS

Document number and name	Part 1065 reference
''California Non-Methane Organic Gas Test Procedures,'' Amended July 30, 2002, Mobile Source Division, California Air Resources Board	1065.805

PART 1068—GENERAL COMPLIANCE PROVISIONS FOR NONROAD PROGRAMS

Subpart A—Applicability and Miscellaneous Provisions

Sec.
1068.1 Does this part apply to me?
1068.5 How must manufacturers apply good engineering judgment?
1068.10 What provisions apply to confidential information?
1068.15 Who is authorized to represent the Agency?
1068.20 May EPA enter my facilities for inspections?
1068.25 What information must I give to EPA?
1068.27 May EPA conduct testing with my production engines?
1068.30 What definitions apply to this part?
1068.35 What symbols, acronyms, and abbreviations does this part use?

Subpart B—Prohibited Actions and Related Requirements

1068.101 What general actions does this regulation prohibit?
1068.105 What other provisions apply to me specifically if I manufacture equipment needing certified engines?
1068.110 What other provisions apply to engines in service?
1068.115 When must manufacturers honor emission-related warranty claims?
1068.120 What requirements must I follow to rebuild engines?
1068.125 What happens if I violate the regulations?

Subpart C—Exemptions and Exclusions

1068.201 Does EPA exempt or exclude any engines from the prohibited acts?
1068.210 What are the provisions for exempting test engines?
1068.215 What are the provisions for exempting manufacturer-owned engines?
1068.220 What are the provisions for exempting display engines?
1068.225 What are the provisions for exempting engines for national security?
1068.230 What are the provisions for exempting engines for export?
1068.235 What are the provisions for exempting engines used solely for competition?
1068.240 What are the provisions for exempting new replacement engines?
1068.245 What temporary provisions address hardship due to unusual circumstances?
1068.250 What are the provisions for extending compliance deadlines for small-volume manufacturers under hardship?
1068.255 What are the provisions for exempting engines for hardship for equipment manufacturers and secondary engine manufacturers?

1068.260 What are the provisions for temporarily exempting engines for delegated final assembly?
1068.265 What provisions apply to engines that are conditionally exempted from certification?

Subpart D—Imports

1068.301 Does this subpart apply to me?
1068.305 How do I get an exemption or exclusion for imported engines?
1068.310 What are the exclusions for imported engines?
1068.315 What are the permanent exemptions for imported engines?
1068.320 How must I label an imported engine with a permanent exemption?
1068.325 What are the temporary exemptions for imported engines?
1068.330 How do I import engines requiring further assembly?
1068.335 What are the penalties for violations?

Subpart E—Selective Enforcement Auditing

1068.401 What is a selective enforcement audit?
1068.405 What is in a test order?
1068.410 How must I select and prepare my engines?
1068.415 How do I test my engines?
1068.420 How do I know when my engine family fails an SEA?
1068.425 What happens if one of my production-line engines exceeds the emission standards?
1068.430 What happens if an engine family fails an SEA?
1068.435 May I sell engines from an engine family with a suspended certificate of conformity?
1068.440 How do I ask EPA to reinstate my suspended certificate?
1068.445 When may EPA revoke my certificate under this subpart and how may I sell these engines again?
1068.450 What records must I send to EPA?
1068.455 What records must I keep?
APPENDIX A TO SUBPART E OF PART 1068—PLANS FOR SELECTIVE ENFORCEMENT AUDITING

Subpart F—Reporting Defects and Recalling Engines

1068.501 How do I report engine defects?
1068.505 How does the recall program work?
1068.510 How do I prepare and apply my remedial plan?
1068.515 How do I mark or label repaired engines?
1068.520 How do I notify affected owners?
1068.525 What records must I send to EPA?
1068.530 What records must I keep?
1068.535 How can I do a voluntary recall for emission-related problems?

Subpart G—Hearings

1068.601 What are the procedures for hearings?
APPENDIX I TO PART 1068—EMISSION-RELATED COMPONENTS
APPENDIX II TO PART 1068—EMISSION-RELATED PARAMETERS AND SPECIFICATIONS

AUTHORITY: 42 U.S.C. 7401–7671q.

SOURCE: 67 FR 68347, Nov. 8, 2002, unless otherwise noted.

Subpart A—Applicability and Miscellaneous Provisions

§ 1068.1 Does this part apply to me?

(a) The provisions of this part apply to everyone with respect to the following engines and to equipment using the following engines (including owners, operators, parts manufacturers, and persons performing maintenance).

(1) Large nonroad spark-ignition engines we regulate under 40 CFR part 1048.

(2) Recreational SI engines and vehicles that we regulate under 40 CFR part 1051 (such as snowmobiles and off-highway motorcycles).

(3) Land-based nonroad diesel engines that we regulate under 40 CFR part 1039.

(4) Stationary compression-ignition engines certified to the provisions of 40 CFR part 1039, as indicated under 40 CFR part 60, subpart IIII.

(b) This part does not apply to any of the following engine or vehicle categories:

(1) Light-duty motor vehicles (see 40 CFR part 86).

(2) Heavy-duty motor vehicles and motor vehicle engines (see 40 CFR part 86).

(3) Aircraft engines (see 40 CFR part 87).

(4) Locomotive engines (see 40 CFR part 92).

(5) Land-based nonroad diesel engines that we regulate under 40 CFR part 89.

(6) Marine diesel engines (see 40 CFR parts 89 and 94)

(7) Marine outboard and personal watercraft engines (see 40 CFR part 91).

(8) Small nonroad spark-ignition engines (see 40 CFR part 90).

(c) For equipment subject to this part and regulated under equipment-based standards, interpret the term ''engine'' in this part to include equipment (see § 1068.30).

(d) Paragraph (a)(1) of this section identifies the parts of the CFR that define emission standards and other requirements for particular types of engines and vehicles. This part 1068 refers to each of these other parts generically as the ''standard-setting part.'' For example, 40 CFR part 1051 is always the standard-setting part for snowmobiles. Follow the provisions of the standard-setting part if they are different than any of the provisions in this part.

(e)(1) The provisions of §§ 1068.30, 1068.310, and 1068.320 apply for stationary spark-ignition engines built on or after January 1, 2004, and for stationary compression-ignition engines built on or after January 1, 2006.

(2) The provisions of §§ 1068.30 and 1068.235 apply for the types of engines listed in paragraph (a) of this section beginning January 1, 2004, where they are used solely for competition.

[69 FR 39263, June 29, 2004, as amended at 71 FR 39185, July 11, 2006]

§ 1068.5 How must manufacturers apply good engineering judgment?

(a) You must use good engineering judgment for decisions related to any requirements under this chapter. This includes your applications for certification, any testing you do to show that your certification, production-line, and in-use engines comply with requirements that apply to them, and how you select, categorize, determine, and apply these requirements.

(b) If we send you a written request, you must give us a written description of the engineering judgment in question. Respond within 15 working days of receiving our request unless we allow more time.

(c) We may reject your decision if it is not based on good engineering judgment or is otherwise inconsistent with the requirements that apply, based on the following provisions:

(1) We may suspend, revoke, or void a certificate of conformity if we determine you deliberately used incorrect information or overlooked important information, that you did not decide in good faith, or that your decision was not rational.

(2) If we believe a different decision would better reflect good engineering judgment, but none of the provisions of paragraph (c)(1) of this section apply, we will tell you of our concern (and its basis). You will have 30 days to respond to our concerns, or more time if we agree that you need it to generate more information. After considering your information, we will give you a final ruling. If we conclude that you did not use good engineering judgment, we may reject your decision and apply the new ruling to similar situations as soon as possible.

(d) We will tell you in writing of the conclusions we reach under paragraph (c) of this section and explain our reasons for them.

(e) If you disagree with our conclusions, you may file a request for a hearing with the Designated Officer as described in subpart G of this part. In your request, specify your objections, include data or supporting analysis, and get your authorized representative's signature. If we agree that your request raises a substantial factual issue, we will hold the hearing according to subpart F of this part.

[69 FR 39263, June 29, 2004]

§ 1068.10 What provisions apply to confidential information?

(a) Clearly show what you consider confidential by marking, circling, bracketing, stamping, or some other method.

(b) We will store your confidential information as described in 40 CFR part 2. Also, we will disclose it only as specified in 40 CFR part 2. This applies both to any information you send us and to any information we collect from inspections, audits, or other site visits.

(c) If you send us a second copy without the confidential information, we will assume it contains nothing confidential whenever we need to release information from it.

(d) If you send us information without claiming it is confidential, we may make it available to the public without further notice to you, as described in 40 CFR 2.204.

[70 FR 40511, July 13, 2005]

§ 1068.15 Who is authorized to represent the Agency?

(a) The Administrator of the Environmental Protection Agency or any official to whom the Administrator has delegated specific authority may represent the Agency. For more information, ask for a copy of the relevant sections of the EPA Delegation Manual from the Designated Officer.

(b) The regulations in this part and in the standard-setting part have specific requirements describing how to get EPA approval before you take specific actions. These regulations also allow us to waive some specific requirements. For provisions or flexibilities that we address frequently, we may choose to provide detailed guidance in supplemental compliance instructions for manufacturers. Such instructions will generally state how they relate to the need for pre-approval. Unless we explicitly state so, you should not consider full compliance with the instructions to be equivalent to EPA approval.

§ 1068.20 May EPA enter my facilities for inspections?

(a) We may inspect your engines, testing, manufacturing processes, engine storage facilities (including port facilities for imported engines or other relevant facilities), or records, as authorized by the Act, to enforce the provisions of this chapter. Inspectors will have authorizing credentials and will limit inspections to reasonable times—usually, normal operating hours.

(b) If we come to inspect, we may or may not have a warrant or court order.

(1) If we do not have a warrant or court order, you may deny us entry.

(2) If we have a warrant or court order, you must allow us to enter the facility and carry out the activities it describes.

(c) We may seek a warrant or court order authorizing an inspection described in this section, whether or not we first tried to get your permission to inspect.

(d) We may select any facility to do any of the following:

(1) Inspect and monitor any aspect of engine manufacturing, assembly, storage, or other procedures, and any facilities where you do them.

(2) Inspect and monitor any aspect of engine test procedures or test-related activities, including test engine selection, preparation, service accumulation, emission duty cycles, and maintenance and verification of your test equipment's calibration.

(3) Inspect and copy records or documents related to assembling, storing, selecting, and testing an engine.

(4) Inspect and photograph any part or aspect of engines and components you use for assembly.

(e) You must give us reasonable help without charge during an inspection authorized by the Act. For example, you may need to help us arrange an inspection with the facility's managers, including clerical support, copying, and translation. You may also need to show us how the facility operates and answer other questions. If we ask in writing to see a particular employee at the inspection, you must ensure that he or she is present (legal counsel may accompany the employee).

(f) If you have facilities in other countries, we expect you to locate them in places where local law does not keep us from inspecting as described in this section. We will not try to inspect if we learn that local law prohibits it, but we may suspend your certificate if we are not allowed to inspect.

§ 1068.25 What information must I give to EPA?

If you are subject to the requirements of this part, we may require you to give us information to evaluate your compliance with any regulations that apply, as authorized by the Act. This includes the following things:

(a) You must provide the information we require in this chapter.

(b) You must establish and maintain records, perform tests, make reports and provide additional information that we may reasonably require under section 208 of the Act (42 U.S.C. 7542). This also applies to engines we exempt from emission standards or prohibited acts.

[69 FR 39264, June 29, 2004]

§ 1068.27 May EPA conduct testing with my production engines?

If we request it, you must make a reasonable number of production-line

engines available for a reasonable time so we can test or inspect them for compliance with the requirements of this chapter.

[69 FR 39264, June 29, 2004]

§ 1068.30 What definitions apply to this part?

The following definitions apply to this part. The definitions apply to all subparts unless we note otherwise. All undefined terms have the meaning the Act gives to them. The definitions follow:

Act means the Clean Air Act, as amended, 42 U.S.C. 7401–7671q.

Aftertreatment means relating to a catalytic converter, particulate filter, or any other system, component, or technology mounted downstream of the exhaust valve (or exhaust port) whose design function is to reduce emissions in the engine exhaust before it is exhausted to the environment. Exhaust-gas recirculation (EGR) is not aftertreatment.

Aircraft means any vehicle capable of sustained air travel above treetop heights.

Certificate holder means a manufacturer (including importers) with a currently valid certificate of conformity for at least one engine family in a given model year.

Days means calendar days, including weekends and holidays.

Defeat device means has the meaning given in the standard-setting part.

Designated Officer means the Manager of the Engine Programs Group (6405–J), U.S. Environmental Protection Agency, 1200 Pennsylvania Ave., Washington, DC 20460.

Emission-related defect means a defect in design, materials, or workmanship (in an emission-control device or vehicle component or system) that affects an emission-related component, parameter, or specification that is identified in Appendix I or Appendix II of this part. Using an incorrect emission-related component is an emission-related defect.

Engine means an engine to which this part applies. For equipment subject to this part and regulated under equipment-based standards, the term engine in this part shall be interpreted to include equipment.

Engine-based means having emission standards in units of grams of pollutant per kilowatt-hour, and which apply to the engine. Emission standards are either engine-based or equipment-based.

Engine manufacturer means the manufacturer that is subject to the certification requirements of the standard-setting part. For vehicles and equipment subject to this part and regulated under vehicle-based or equipment-based standards, the term engine manufacturer in this part includes vehicle and equipment manufacturers.

Equipment means any vehicle, vessel, or other type of equipment that is subject to the requirements of this part, or that uses an engine that is subject to the requirements of this part.

Equipment-based means having emission standards that apply to the equipment in which an engine is used, without regard to how the emissions are measured. Where equipment-based standards apply, we require that the equipment be certified, rather than just the engine. Emission standards are either engine-based or equipment-based.

Equipment manufacturer means any company manufacturing a piece of equipment (such as a vehicle).

Exempted means relating to an engine that is not required to meet otherwise applicable standards. Exempted engines must conform to regulatory conditions specified for an exemption in this part 1068 or in the standard-setting part. Exempted engines are deemed to be ''subject to'' the standards of the standard-setting part, even though they are not required to comply with the otherwise applicable requirements. Engines exempted with respect to a certain tier of standards may be required to comply with an earlier tier of standards as a condition of the exemption; for example, engines exempted with respect to Tier 3 standards may be required to comply with Tier 1 or Tier 2 standards.

Good engineering judgment means judgments made consistent with generally accepted scientific and engineering principles and all available relevant information. See 40 CFR 1068.5 for the administrative process we use

to evaluate good engineering judgment.

Manufacturer has the meaning given in section 216(1) of the Act (42 U.S.C. 7550(1)). In general, this term includes any person who manufactures an engine or vehicle for sale in the United States or otherwise introduces a new engine or vehicle into commerce in the United States. This includes importers that import new engines or new equipment into the United States for resale. It also includes secondary engine manufacturers, as described in § 1068.255.

Motor vehicle has the meaning given in 40 CFR 85.1703(a).

New has the meaning we give it in the standard-setting part.

Nonroad engine means:

(1) Except as discussed in paragraph (2) of this definition, a nonroad engine is any internal combustion engine:

(i) In or on a piece of equipment that is self-propelled or serves a dual purpose by both propelling itself and performing another function (such as garden tractors, off-highway mobile cranes and bulldozers); or

(ii) In or on a piece of equipment that is intended to be propelled while performing its function (such as lawnmowers and string trimmers); or

(iii) That, by itself or in or on a piece of equipment, is portable or transportable, meaning designed to be and capable of being carried or moved from one location to another. Indicia of transportability include, but are not limited to, wheels, skids, carrying handles, dolly, trailer, or platform.

(2) An internal combustion engine is not a nonroad engine if:

(i) The engine is used to propel a motor vehicle, an aircraft, or equipment used solely for competition, or is subject to standards promulgated under section 202 of the Act (42 U.S.C. 7521); or

(ii) The engine is regulated by a federal New Source Performance Standard promulgated under section 111 of the Act (42 U.S.C. 7411); or

(iii) The engine otherwise included in paragraph (1)(iii) of this definition remains or will remain at a location for more than 12 consecutive months or a shorter period of time for an engine located at a seasonal source. A location is any single site at a building, structure, facility, or installation. Any engine (or engines) that replaces an engine at a location and that is intended to perform the same or similar function as the engine replaced will be included in calculating the consecutive time period. An engine located at a seasonal source is an engine that remains at a seasonal source during the full annual operating period of the seasonal source. A seasonal source is a stationary source that remains in a single location on a permanent basis (*i.e.*, at least two years) and that operates at that single location approximately three months (or more) each year. This paragraph (2)(iii) does not apply to an engine after the engine is removed from the location.

Operating hours means:

(1) For engine storage areas or facilities, times during which people other than custodians and security personnel are at work near, and can access, a storage area or facility.

(2) For other areas or facilities, times during which an assembly line operates or any of the following activities occurs:

(i) Testing, maintenance, or service accumulation.

(ii) Production or compilation of records.

(iii) Certification testing.

(iv) Translation of designs from the test stage to the production stage.

(v) Engine manufacture or assembly.

Piece of equipment means any vehicle, vessel, locomotive, aircraft, or other type of equipment using engines to which this part applies.

Placed into service means used for its intended purpose.

Reasonable technical basis means information that would lead a person familiar with engine design and function to reasonably believe a conclusion, related to compliance with the requirements of this part. For example, it would be reasonable to believe that parts performing the same function as the original parts (and to the same degree) would control emissions to the same degree as the original parts.

Revoke means to terminate the certificate or an exemption for an engine family. If we revoke a certificate or exemption, you must apply for a new certificate or exemption before continuing

to introduce the affected engines into commerce. This does not apply to engines you no longer possess.

Standard-setting part means the part in the Code of Federal Regulations that defines emission standards for a particular engine (see §1068.1(a)). For example, the standard-setting part for non-recreational spark-ignition engines over 19 kW is part 1048 of this chapter.

Suspend means to temporarily discontinue the certificate or an exemption for an engine family. If we suspend a certificate, you may not introduce into commerce engines from that engine family unless we reinstate the certificate or approve a new one. If we suspend an exemption, you may not introduce into commerce engines that were previously covered by the exemption unless we reinstate the exemption.

Ultimate purchaser means the first person who in good faith purchases a new nonroad engine or new piece of equipment for purposes other than resale.

United States means the States, the District of Columbia, the Commonwealth of Puerto Rico, the Commonwealth of the Northern Mariana Islands, Guam, American Samoa, and the U.S. Virgin Islands.

U.S.-directed production volume means the number of engine units, subject to the requirements of this part, produced by a manufacturer for which the manufacturer has a reasonable assurance that sale was or will be made to ultimate purchasers in the United States.

We (us, our) means the Administrator of the Environmental Protection Agency and any authorized representatives.

Void means to invalidate a certificate or an exemption ab initio. If we void a certificate, all the engines introduced into commerce under that engine family for that model year are considered noncompliant, and you are liable for each engine introduced into commerce under the certificate and may face civil or criminal penalties or both. This applies equally to all engines in the engine family, including engines introduced into commerce before we voided the certificate. If we void an exemption, all the engines introduced into commerce under that exemption are considered uncertified (or nonconforming), and you are liable for each engine introduced into commerce under the exemption and may face civil or criminal penalties or both. You may not introduce into commerce any additional engines using the voided exemption.

[67 FR 68347, Nov. 8, 2002, as amended at 69 FR 39264, June 29, 2004; 70 FR 40511, July 13, 2005]

§ 1068.35 What symbols, acronyms, and abbreviations does this part use?

The following symbols, acronyms, and abbreviations apply to this part:

$ U.S. dollars.
CFR Code of Federal Regulations.
EPA Environmental Protection Agency.
U.S. United States.
U.S.C. United States Code.

Subpart B—Prohibited Actions and Related Requirements

§ 1068.101 What general actions does this regulation prohibit?

This section specifies actions that are prohibited and the maximum civil penalties that we can assess for each violation. The maximum penalty values listed in paragraphs (a) and (b) of this section are shown for calendar year 2004. As described in paragraph (e) of this section, maximum penalty limits for later years are set forth in 40 CFR part 19.

(a) The following prohibitions and requirements apply to manufacturers of new engines and manufacturers of equipment containing these engines, except as described in subparts C and D of this part:

(1) *Introduction into commerce.* You may not sell, offer for sale, or introduce or deliver into commerce in the United States or import into the United States any new engine or equipment after emission standards take effect for that engine or equipment, unless it has a valid certificate of conformity for its model year and the required label or tag. You also may not take any of the actions listed in the previous sentence with respect to any equipment containing an engine subject to this part's provisions, unless the engine has a valid and appropriate

certificate of conformity and the required engine label or tag. For purposes of this paragraph (a)(1), an appropriate certificate of conformity is one that applies for the same model year as the model year of the equipment (except as allowed by § 1068.105(a)), covers the appropriate category of engines (such as locomotive or CI marine), and conforms to all requirements specified for equipment in the standard-setting part. The requirements of this paragraph (a)(1) also cover new engines you produce to replace an older engine in a piece of equipment, unless the engine qualifies for the replacement-engine exemption in § 1068.240. We may assess a civil penalty up to $32,500 for each engine in violation.

(2) *Reporting and recordkeeping.* This chapter requires you to record certain types of information to show that you meet our standards. You must comply with these requirements to make and maintain required records (including those described in § 1068.501). You may not deny us access to your records or the ability to copy your records if we have the authority to see or copy them. Also, you must give us the required reports or information without delay. Failure to comply with the requirements of this paragraph is prohibited. We may assess a civil penalty up to $32,500 for each day you are in violation.

(3) *Testing and access to facilities.* You may not keep us from entering your facility to test engines or inspect if we are authorized to do so. Also, you must perform the tests we require (or have the tests done for you). Failure to perform this testing is prohibited. We may assess a civil penalty up to $32,500 for each day you are in violation.

(b) The following prohibitions apply to everyone with respect to the engines to which this part applies:

(1) *Tampering.* You may not remove or disable a device or element of design that may affect an engine's emission levels. This restriction applies before and after the engine is placed in service. Section 1068.120 describes how this applies to rebuilding engines. For a manufacturer or dealer, we may assess a civil penalty up to $32,500 for each engine in violation. For anyone else, we may assess a civil penalty up to $2,750 for each engine in violation. This prohibition does not apply in any of the following situations:

(i) You need to repair an engine and you restore it to proper functioning when the repair is complete.

(ii) You need to modify an engine to respond to a temporary emergency and you restore it to proper functioning as soon as possible.

(iii) You modify a new engine that another manufacturer has already certified to meet emission standards and recertify it under your own engine family. In this case you must tell the original manufacturer not to include the modified engines in the original engine family.

(2) *Defeat devices.* You may not knowingly manufacture, sell, offer to sell, or install, an engine part that bypasses, impairs, defeats, or disables the engine's control the emissions of any pollutant. We may assess a civil penalty up to $2,750 for each part in violation.

(3) *Stationary engines.* For an engine that is excluded from any requirements of this chapter because it is a stationary engine, you may not move it or install it in any mobile equipment, except as allowed by the provisions of this chapter. You may not circumvent or attempt to circumvent the residence-time requirements of paragraph (2)(iii) of the nonroad engine definition in § 1068.30. We may assess a civil penalty up to $32,500 for each day you are in violation.

(4) *Competition engines.* For an uncertified engine or piece of equipment that is excluded or exempted from any requirements of this chapter because it is to be used solely for competition, you may not use it in a manner that is inconsistent with use solely for competition. We may assess a civil penalty up to $32,500 for each day you are in violation.

(5) *Importation.* You may not import an uncertified engine or piece of equipment if it is defined to be new in the standard-setting part and it is built after emission standards start to apply in the United States. We may assess a civil penalty up to $32,500 for each day you are in violation. Note the following:

(i) The definition of new is broad for imported engines; uncertified engines

and equipment (including used engines and equipment) are generally considered to be new when imported.

(ii) Engines that were originally manufactured before applicable EPA standards were in effect are generally not subject to emission standards.

(6) *Warranty*. You must meet your obligation to honor your emission-related warranty under § 1068.115 and to fulfill any applicable responsibilities to recall engines under § 1068.505. Failure to meet these obligations is prohibited. We may assess a civil penalty up to $32,500 for each engine in violation.

(c) Exemptions from these prohibitions are described in subparts C and D of this part.

(d) The standard-setting parts describe more requirements and prohibitions that apply to manufacturers (including importers) and others under this chapter.

(e) The maximum penalty values listed in paragraphs (a) and (b) of this section are shown for calendar year 2002. Maximum penalty limits for later years may be adjusted based on the Consumer Price Index. The specific regulatory provisions for changing the maximum penalties, published in 40 CFR part 19, reference the applicable U.S. Code citation on which the prohibited action is based. The following table is shown here for informational purposes:

TABLE 1 OF § 1068.101—LEGAL CITATION FOR SPECIFIC PROHIBITIONS FOR DETERMINING MAXIMUM PENALTY AMOUNTS

Part 1068 regulatory citation of prohibited action	General description of prohibition	U.S. Code citation for Clean Air Act authority
§ 1068.101(a)(1)	Introduction into commerce of an uncertified product.	42 U.S.C. 7522(a)(1)
§ 1068.101(a)(1)	Failure to provide information	42 U.S.C. 7522(a)(2)
§ 1068.101(a)(3)	Denying access to facilities	42 U.S.C. 7522(a)(2)
§ 1068.101(b)(1)	Tampering with emission controls by a manufacturer or dealer. Tampering with emission controls by someone other than a manufacturer or dealer.	42 U.S.C. 7522(a)(3)
§ 1068.101(b)(2)	Sale or use of a defeat device	42 U.S.C. 7522(a)(3)
§ 1068.101(b)(3)	Mobile use of a stationary engine	42 U.S.C. 7522(a)(1)
§ 1068.101(b)(4)	Noncompetitive use of an uncertified engine that is exempted for competition.	42 U.S.C. 7522(a)(1)
§ 1068.101(b)(5)	Importation of an uncertified product	42 U.S.C. 7522(a)(1)

[67 FR 68347, Nov. 8, 2002, as amended at 69 FR 39265, June 29, 2004; 70 FR 40512, July 13, 2005]

§ 1068.105 What other provisions apply to me specifically if I manufacture equipment needing certified engines?

This section describes general provisions that apply to equipment manufacturers. See the standard-setting part for any requirements that apply for certain applications.

(a) *Transitioning to new engine-based standards.* If new emission standards apply in a given model year, your equipment in that model year must have engines that are certified to the new standards, except that you may use up your normal inventory of earlier engines that were built before the date of the new or changed standards. For example, if your normal inventory practice is to keep on hand a one-month supply of engines based on your upcoming production schedules, and a new tier of standard starts to apply for the 2015 model year, you may order engines based on your normal inventory requirements late in the engine manufacturer's 2014 model year and install those engines in your equipment, regardless of the date of installation. Also, if your model year starts before

the end of the calendar year preceding new standards, you may use engines from the previous model year for those units you produce before January 1 of the year that new standards apply. If emission standards do not change in a given model year, you may continue to install engines from the previous model year without restriction. You may not circumvent the provisions of § 1068.101(a)(1) by stockpiling engines that were built before new or changed standards take effect. Note that this allowance does not apply for equipment subject to equipment-based standards.

(b) *Installing engines.* You must follow the engine manufacturer's emission-related installation instructions. For example, you may need to constrain where you place an exhaust aftertreatment device or integrate into your equipment models a device for sending visual or audible signals to the operator. Not meeting the manufacturer's emission-related installation instructions is a violation of § 1068.101(b)(1).

(c) *Attaching a duplicate label.* If you obscure the engine's label, you must do four things to avoid violating § 1068.101(a)(1):

(1) Send a request for duplicate labels in writing with your company's letterhead to the engine manufacturer. Include the following information in your request:

(i) Identify the type of equipment and the specific engine and equipment models needing duplicate labels.

(ii) Identify the engine family (from the original engine label).

(iii) State the reason that you need a duplicate label for each equipment model.

(iv) Identify the number of duplicate labels you will need.

(2) Permanently attach the duplicate label to your equipment by securing it to a part needed for normal operation and not normally requiring replacement. Make sure an average person can easily read it.

(3) Destroy any unused duplicate labels if you find that you will not need them.

(4) Keep the following records for at least eight years after the end of the model year identified on the engine label:

(i) Keep a copy of your written request.

(ii) Keep drawings or descriptions that show how you apply the duplicate labels to your equipment.

(iii) Maintain a count of those duplicate labels you use and those you destroy.

[67 FR 68347, Nov. 8, 2002, as amended at 69 FR 39265, June 29, 2004; 70 FR 40513, July 13, 2005]

§ 1068.110 What other provisions apply to engines in service?

(a) *Aftermarket parts and service.* As the engine manufacturer, you may not require anyone to use your parts or service to maintain or repair an engine, unless we approve this in your application for certification. It is a violation of the Act for anyone to manufacture an engine or vehicle part if one of its main effects is to reduce the effectiveness of the emission controls. See § 1068.101(b)(2).

(b) *Certifying aftermarket parts.* As the manufacturer or rebuilder of an aftermarket engine part, you may—but are not required to—certify according to § 85.2114 of this chapter that using the part will not cause engines to fail to meet emission standards. Whether you certify or not, you must keep any information showing how your parts or service affect emissions.

(c) *Compliance with standards.* We may test engines and equipment to investigate compliance with emission standards and other requirements. We may also require the manufacturer to do this testing.

(d) *Defeat devices.* We may test engines and equipment to investigate potential defeat devices. We may also require the manufacturer to do this testing. If we choose to investigate one of your designs, we may require you to show us that it does not have a defeat device. To do this, you may have to share with us information regarding test programs, engineering evaluations, design specifications, calibrations, on-board computer algorithms, and design strategies. It is a violation of the Act for anyone to make, install or use defeat devices. See § 1068.101(b)(2) and the standard-setting part.

(e) *Warranty and maintenance.* Owners are responsible for properly maintaining their engines; however, owners may make warranty claims against the manufacturer for all expenses related to diagnosing and repairing or replacing emission-related parts, as described in §1068.115. The warranty period begins when the engine is first placed into service. See the standard-setting part for specific requirements. It is a violation of the Act for anyone to disable emission controls; see §1068.101(b)(1) and the standard-setting part.

[67 FR 68347, Nov. 8, 2002, as amended at 69 FR 39266, June 29, 2004; 70 FR 40513, July 13, 2005]

§ 1068.115 When must manufacturers honor emission-related warranty claims?

Section 207(a) of the Clean Air Act (42 U.S.C. 7541(a)) requires certifying manufacturers to warrant to purchasers that their engines are designed, built, and equipped to conform at the time of sale to the applicable regulations for their full useful life, including a warranty that the engines are free from defects in materials and workmanship that would cause an engine to fail to conform to the applicable regulations during the specified warranty period. This section codifies the warranty requirements of section 207(a) without intending to limit these requirements.

(a) As a certifying manufacturer, you may deny warranty claims only for failures that have been caused by the owner's or operator's improper maintenance or use, by accidents for which you have no responsibility, or by acts of God. For example, you would not need to honor warranty claims for failures that have been directly caused by the operator's abuse of an engine or the operator's use of the engine in a manner for which it was not designed, and are not attributable to you in any way.

(b) As a certifying manufacturer, you may not deny emission-related warranty claims based on any of the following:

(1) Maintenance or other service you or your authorized facilities performed.

(2) Engine repair work that an operator performed to correct an unsafe, emergency condition attributable to you, as long as the operator tries to restore the engine to its proper configuration as soon as possible.

(3) Any action or inaction by the operator unrelated to the warranty claim.

(4) Maintenance that was performed more frequently than you specify.

(5) Anything that is your fault or responsibility.

(6) The use of any fuel that is commonly available where the engine operates, unless your written maintenance instructions state that this fuel would harm the engine's emission control system and operators can readily find the proper fuel.

[67 FR 68347, Nov. 8, 2002, as amended at 70 FR 40513, July 13, 2005]

§ 1068.120 What requirements must I follow to rebuild engines?

(a) This section describes the steps to take when rebuilding engines to avoid violating the tampering prohibition in §1068.101(b)(1). These requirements apply to anyone rebuilding an engine subject to this part, but the recordkeeping requirements in paragraphs (j) and (k) of this section apply only to businesses.

(b) The term ''rebuilding'' refers to a rebuild of an engine or engine system, including a major overhaul in which you replace the engine's pistons or power assemblies or make other changes that significantly increase the service life of the engine. It also includes replacing or rebuilding an engine's turbocharger or aftercooler or the engine's systems for fuel metering or electronic control so that it significantly increases the service life of the engine. For these provisions, rebuilding may or may not involve removing the engine from the equipment. Rebuilding does not normally include the following:

(1) Scheduled emission-related maintenance that the standard-setting part allows during the useful life period (such as replacing fuel injectors).

(2) Unscheduled maintenance that occurs commonly within the useful life period. For example, replacing a water pump is not rebuilding an engine.

(c) For maintenance or service that is not rebuilding, you may not make changes that might increase emissions

of any pollutant, but you do not need to keep any records.

(d) If you rebuild an engine or engine system, you must have a reasonable technical basis for knowing that the rebuilt engine's emission-control system performs as well as, or better than, it performs in its certified configuration. Identify the model year of the resulting engine configuration. You have a reasonable basis if you meet two main conditions:

(1) Install parts—new, used, or rebuilt—so a person familiar with engine design and function would reasonably believe that the engine with those parts will control emissions of all pollutants at least to the same degree as with the original parts. For example, it would be reasonable to believe that parts performing the same function as the original parts (and to the same degree) would control emissions to the same degree as the original parts.

(2) Adjust parameters or change design elements only according to the original engine manufacturer's instructions. Or, if you differ from these instructions, you must have data or some other technical basis to show you should not expect in-use emissions to increase.

(e) If the rebuilt engine remains installed or is reinstalled in the same piece of equipment, you must rebuild it to the original configuration or another certified configuration of the same or later model year.

(f) If the rebuilt engine replaces another certified engine in a piece of equipment, you must rebuild it to a certified configuration of the same model year as, or a later model year than, the engine you are replacing.

(g) Do not erase or reset emission-related codes or signals from onboard monitoring systems without diagnosing and responding appropriately to any diagnostic codes. This requirement applies regardless of the manufacturer's reason for installing the monitoring system and regardless of its form or interface. Clear any codes from diagnostic systems when you return the rebuilt engine to service. Do not disable a diagnostic signal without addressing its cause.

(h) When you rebuild an engine, check, clean, adjust, repair, or replace all emission-related components (listed in Appendix I of this part) as needed according to the original manufacturer's recommended practice. In particular, replace oxygen sensors, replace the catalyst if there is evidence of malfunction, clean gaseous fuel system components, and replace fuel injectors (if applicable), unless you have a reasonable technical basis for believing any of these components do not need replacement.

(i) If you are installing an engine that someone else has rebuilt, check all emission-related components listed in Appendix I of this part as needed according to the original manufacturer's recommended practice.

(j) Keep at least the following records:

(1) Identify the hours of operation (or mileage, as appropriate) at time of rebuild.

(2) Identify the work done on the engine or any emission-related control components, including a listing of parts and components you used.

(3) Describe any engine parameter adjustments.

(4) Identify any emission-related codes or signals you responded to and reset.

(k) You must show us or send us your records if we ask for them. Keep records for at least two years after rebuilding an engine. Keep them in any format that allows us to readily review them.

(1) You do not need to keep information that is not reasonably available through normal business practices. We do not expect you to have information that you cannot reasonably access.

(2) You do not need to keep records of what other companies do.

(3) You may keep records based on engine families rather than individual engines if that is the way you normally do business.

[67 FR 68347, Nov. 8, 2002, as amended at 69 FR 39266, June 29, 2004]

§ 1068.125 What happens if I violate the regulations?

(a) *Civil penalties and injunctions.* We may bring a civil action to assess and recover civil penalties and/or enjoin and restrain violations in the United States District Court for the district

where you allegedly violated a requirement, or the district where you live or have your main place of business. Actions to assess civil penalties or restrain violations of § 1068.101 must be brought by and in the name of the United States. The selected court has jurisdiction to restrain violations and assess civil penalties.

(1) To determine the amount of a civil penalty and reach a just conclusion, the court considers these main factors:

(i) The seriousness of your violation.

(ii) How much you benefitted or saved because of the violation.

(iii) The size of your business.

(iv) Your history of compliance with Title II of the Act (42 U.S.C. 7401–7590).

(v) What you did to remedy the violation.

(vi) How the penalty will affect your ability to continue in business.

(vii) Such other matters as justice may require.

(2) Subpoenas for witnesses who must attend a district court in any district may apply to any other district.

(b) *Administrative penalties.* Instead of bringing a civil action, we may assess administrative penalties if the total is less than $270,000 against you individually. This maximum penalty may be greater if the Administrator and the Attorney General jointly determine that is appropriate for administrative penalty assessment, or if the limit is adjusted under 40 CFR part 19. No court may review such a determination. Before we assess an administrative penalty, you may ask for a hearing (subject to 40 CFR part 22). The Administrator may compromise or remit, with or without conditions, any administrative penalty that may be imposed under this section.

(1) To determine the amount of an administrative penalty, we will consider the factors described in paragraph (a)(1) of this section.

(2) An administrative order we issue under this paragraph (b) becomes final 30 days after we issue it, unless you ask for judicial review by that time (see paragraph (c) of this section). You may ask for review by any of the district courts listed in paragraph (a) of this section. Send the Administrator a copy of the filing by certified mail.

(3) We will not pursue an administrative penalty for a particular violation if either of the following two conditions is true:

(i) We are separately prosecuting the violation under this subpart.

(ii) We have issued a final order for a violation, no longer subject to judicial review, for which you have already paid a penalty.

(c) *Judicial review.* If you ask a court to review a civil or administrative penalty, we will file in the appropriate court within 30 days of your request a certified copy or certified index of the record on which the court or the Administrator issued the order.

(1) The judge may set aside or remand any order issued under this section only if one of the following is true:

(i) Substantial evidence does not exist in the record, taken as a whole, to support finding a violation.

(ii) The Administrator's assessment of the penalty is an abuse of discretion.

(2) The judge may not add civil penalties unless our penalty is an abuse of discretion that favors you.

(d) *Effect of enforcement actions on other requirements.* Our pursuit of civil or administrative penalties does not affect or limit our authority to enforce any provisions of this chapter.

(e) *Penalties.* In any proceedings, the United States government may seek to collect civil penalties assessed under this section.

(1) Once a penalty assessment is final, if you do not pay it, the Administrator will ask the Attorney General to bring a civil action in an appropriate district court to recover the money. We may collect interest from the date of the final order or final judgment at rates established by the Internal Revenue Code of 1986 (26 U.S.C. 6621(a)(2)). In this action to collect overdue penalties, the court will not review the validity, amount, and appropriateness of the penalty.

(2) In addition, if you do not pay the full amount of a penalty on time, you must then pay more to cover interest, enforcement expenses (including attorney's fees and costs for collection), and a quarterly nonpayment penalty for each quarter you do not pay. The quarterly nonpayment penalty is 10 percent of your total penalties plus any unpaid

nonpayment penalties from previous quarters.

[67 FR 68347, Nov. 8, 2002, as amended at 69 FR 39266, June 29, 2004; 70 FR 40513, July 13, 2005]

Subpart C—Exemptions and Exclusions

§ 1068.201 Does EPA exempt or exclude any engines from the prohibited acts?

We may exempt new engines from some or all of the prohibited acts or requirements of this part under provisions described in this subpart. We may exempt an engine already placed in service in the United States from the prohibition in § 1068.101(b)(1) if the exemption for engines used solely for competition applies (see § 1068.235). In addition, see § 1068.1 and the standard-setting parts to determine if other engines are excluded from some or all of the regulations in this chapter.

(a) This subpart identifies which engines qualify for exemptions and what information we need. We may ask for more information.

(b) If you violate any of the terms, conditions, instructions, or requirements to qualify for an exemption, we may void the exemption.

(c) If you use an exemption under this subpart, we may require you to add a permanent label to your exempted engines. You may ask us to modify these labeling requirements if it is appropriate for your engine.

(d) If you produce engines we exempt under this subpart, we may require you to make and keep records, perform tests, make reports and provide information as needed to reasonably evaluate the validity of the exemption.

(e) If you own or operate engines we exempt under this subpart, we may require you to provide information as needed to reasonably evaluate the validity of the exemption.

(f) Subpart D of this part describes how we apply these exemptions to engines you import (or intend to import).

(g) If you want to ask for an exemption or need more information, write to the Designated Officer.

(h) You may ask us to modify the administrative requirements for the exemptions described in this subpart. We may approve your request if we determine that such approval is consistent with the intent of this part. For example, waivable administrative requirements might include some reporting requirements, but would not include any eligibility requirements or use restrictions.

(i) If you want to take an action with respect to an exempted or excluded engine that is prohibited by the exemption or exclusion, such as selling it, you need to certify the engine. We will issue a certificate of conformity if you send us an application for certification showing that you meet all the applicable requirements from the standard-setting part and pay the appropriate fee. Also, in some cases, we may allow manufacturers to modify the engine as needed to make it identical to engines already covered by a certificate. We would base such an approval on our review of any appropriate documentation. These engines must have emission control information labels that accurately describe their status.

[67 FR 68347, Nov. 8, 2002, as amended at 69 FR 39266, June 29, 2004; 70 FR 40513, July 13, 2005]

§ 1068.210 What are the provisions for exempting test engines?

(a) We may exempt engines that are not exempted under other sections of this part that you will use for research, investigations, studies, demonstrations, or training.

(b) Anyone may ask for a testing exemption.

(c) If you are a certificate holder, you may request an exemption for engines you intend to include in test programs over a two-year period.

(1) In your request, tell us the maximum number of engines involved and describe how you will make sure exempted engines are used only for this testing.

(2) Give us the information described in paragraph (d) of this section if we ask for it.

(d) If you are not a certificate holder do all of the following:

(1) Show that the proposed test program has a valid purpose under paragraph (a) of this section.

(2) Show you need an exemption to achieve the purpose of the test program (time constraints may be a basis for needing an exemption, but the cost of certification alone is not).

(3) Estimate the duration of the proposed test program and the number of engines involved.

(4) Allow us to monitor the testing.

(5) Describe how you will ensure that you stay within this exemption's purposes. Address at least the following things:

(i) The technical nature of the test.

(ii) The test site.

(iii) The duration and accumulated engine operation associated with the test.

(iv) Ownership and control of the engines involved in the test.

(v) The intended final disposition of the engines.

(vi) How you will identify, record, and make available the engine identification numbers.

(vii) The means or procedure for recording test results.

(e) If we approve your request for a testing exemption, we will send you a letter or a memorandum for your signature describing the basis and scope of the exemption. The exemption does not take effect until we receive the signed letter or memorandum from you. It will also include any necessary terms and conditions, which normally require you to do the following:

(1) Stay within the scope of the exemption.

(2) Create and maintain adequate records that we may inspect.

(3) Add a permanent, legible label, written in block letters in English, to a readily visible part of each exempted engine. This label must include at least the following items:

(i) The label heading ''EMISSION CONTROL INFORMATION''.

(ii) Your corporate name and trademark.

(iii) Engine displacement, engine family identification (as applicable), and model year of the engine; or whom to contact for further information.

(iv) The statement ''THIS ENGINE IS EXEMPT UNDER 40 CFR 1068.210 OR 1068.215 FROM EMISSION STANDARDS AND RELATED REQUIREMENTS.''.

(4) Tell us when the test program is finished.

(5) Tell us the final disposition of the engines.

(6) Send us a written confirmation that you meet the terms and conditions of this exemption.

[67 FR 68347, Nov. 8, 2002, as amended at69 FR 39267, June 29, 2004]

§ 1068.215 What are the provisions for exempting manufacturer-owned engines?

(a) You are eligible for the exemption for manufacturer-owned engines only if you are a certificate holder.

(b) An engine may be exempt without a request if it is a nonconforming engine under your ownership and control and you operate it to develop products, assess production methods, or promote your engines in the marketplace. You may not loan, lease, sell, or use the engine to generate revenue, either by itself or in a piece of equipment.

(c) To use this exemption, you must do three things:

(1) Establish, maintain, and keep adequately organized and indexed information on each exempted engine, including the engine identification number, the use of the engine on exempt status, and the final disposition of any engine removed from exempt status.

(2) Let us access these records, as described in § 1068.20.

(3) Add a permanent, legible label, written in block letters in English, to a readily visible part of each exempted engine. This label must include at least the following items:

(i) The label heading ''EMISSION CONTROL INFORMATION''.

(ii) Your corporate name and trademark.

(iii) Engine displacement, engine family identification (as applicable), and model year of the engine or whom to contact for further information.

(iv) The statement ''THIS ENGINE IS EXEMPT UNDER 40 CFR 1068.210 OR 1068.215 FROM EMISSION STANDARDS AND RELATED REQUIREMENTS.''.

(iv) The statement ''THIS ENGINE IS EXEMPT UNDER 40 CFR 1068.215

FROM EMISSION STANDARDS AND RELATED REQUIREMENTS.''.

[67 FR 68347, Nov. 8, 2002, as amended at 69 FR 39267, June 29, 2004]

§ 1068.220 What are the provisions for exempting display engines?

(a) Anyone may request an exemption for display engines.

(b) A nonconforming display engine will be exempted if it is used only for displays in the interest of a business or the general public. This exemption does not apply to engines displayed for private use, private collections, or any other purpose we determine is inappropriate for a display exemption.

(c) You may operate the exempted engine, but only if we approve specific operation that is part of the display.

(d) You may sell or lease the exempted engine only with our advance approval; you may not use it to generate revenue.

(e) To use this exemption, you must add a permanent, legible label, written in block letters in English, to a readily visible part of each exempted engine. This label must include at least the following items:

(1) The label heading ''EMISSION CONTROL INFORMATION''.

(2) Your corporate name and trademark.

(3) Engine displacement, engine family identification (as applicable), and model year of the engine or whom to contact for further information.

(4) The statement ''THIS ENGINE IS EXEMPT UNDER 40 CFR 1068.220 FROM EMISSION STANDARDS AND RELATED REQUIREMENTS.''.

(f) We may set other conditions for approval of this exemption.

[67 FR 68347, Nov. 8, 2002, as amended at 69 FR 39267, June 29, 2004]

§ 1068.225 What are the provisions for exempting engines for national security?

(a) You are eligible for the exemption for national security only if you are a manufacturer.

(b) Your engine is exempt without a request if you produce it for a piece of equipment owned or used by an agency of the federal government responsible for national defense, where the equipment has armor, permanently attached weaponry, or other substantial features typical of military combat.

(c) You may request a national security exemption for engines not meeting the conditions of paragraph (b) of this section, as long as your request is endorsed by an agency of the federal government responsible for national defense. In your request, explain why you need the exemption.

(d) Add a legible label, written in block letters in English, to each engine exempted under this section. The label must be permanently secured to a readily visible part of the engine needed for normal operation and not normally requiring replacement, such as the engine block. This label must include at least the following items:

(1) The label heading ''EMISSION CONTROL INFORMATION''.

(2) Your corporate name and trademark.

(3) Engine displacement, engine family identification (as applicable), and model year of the engine or whom to contact for further information.

(4) The statement ''THIS ENGINE HAS AN EXEMPTION FOR NATIONAL SECURITY UNDER 40 CFR 1068.225.''.

[67 FR 68347, Nov. 8, 2002, as amended at 69 FR 39267, June 29, 2004]

§ 1068.230 What are the provisions for exempting engines for export?

(a) If you export a new engine to a country with emission standards identical to ours, we will not exempt it. These engines must comply with our certification requirements.

(b) If you export an engine to a country with different emission standards or no emission standards, it is exempt from the prohibited acts in this part without a request. If you produce an exempt engine for export and it is sold or offered for sale to someone in the United States (except for export), we will void the exemption.

(c) Label each exempted engine and shipping container with a label or tag showing the engine is not certified for sale or use in the United States. These labels need not be permanently attached to the engines. The label must include at least the statement ''THIS ENGINE IS SOLELY FOR EXPORT AND IS THEREFORE EXEMPT UNDER 40 CFR 1068.230 FROM U.S.

EMISSION STANDARDS AND RELATED REQUIREMENTS.''.

[67 FR 68347, Nov. 8, 2002, as amended at 69 FR 39267, June 29, 2004]

§ 1068.235 What are the provisions for exempting engines used solely for competition?

(a) New engines you produce that are used solely for competition are generally excluded from emission standards. See the standard-setting parts for specific provisions where applicable.

(b) If you modify an engine after it has been placed into service in the United States so it will be used solely for competition, it is exempt without request. This exemption applies only to the prohibition in § 1068.101(b)(1) and is valid only as long as the engine is used solely for competition.

(c) If you modify an engine under paragraph (b) of this section, you must destroy the original emission label. If you loan, lease, sell, or give one of these engines to someone else, you must tell the new owner (or operator, if applicable) in writing that it may be used only for competition.

[67 FR 68347, Nov. 8, 2002, as amended at 69 FR 39267, June 29, 2004]

§ 1068.240 What are the provisions for exempting new replacement engines?

(a) You are eligible for the exemption for new replacement engines only if you are a certificate holder.

(b) The prohibitions in § 1068.101(a)(1) do not apply to an engine if all the following conditions apply:

(1) You produce a new engine to replace an engine already placed in service in a piece of equipment.

(2) The engine being replaced was manufactured before the emission standards that would otherwise apply to the new engine took effect.

(3) You determine that you do not produce an engine certified to meet current requirements that has the appropriate physical or performance characteristics to repower the equipment. If the engine being replaced was made by a different company, you must make this determination also for engines produced by this other company.

(4) You or your agent takes possession of the old engine or confirms that the engine has been destroyed.

(5) You make the replacement engine in a configuration identical in all material respects to the engine being replaced (or that of another certified engine of the same or later model year). This requirement applies only if the old engine was certified to emission standards less stringent than those in effect when you produce the replacement engine.

(c) If the engine being replaced was not certified to any emission standards under this chapter, add a permanent label with your corporate name and trademark and the following language:

THIS ENGINE DOES NOT COMPLY WITH U.S. EPA NONROAD EMISSION REQUIREMENTS. SELLING OR INSTALLING THIS ENGINE FOR ANY PURPOSE OTHER THAN TO REPLACE A NONROAD ENGINE BUILT BEFORE JANUARY 1, [Insert appropriate year reflecting when the earliest tier of standards began to apply to engines of that size and type] MAY BE A VIOLATION OF FEDERAL LAW SUBJECT TO CIVIL PENALTY.

(d) If the engine being replaced was certified to emission standards less stringent than those in effect when you produce the replacement engine, add a permanent label with your corporate name and trademark and the following language:

THIS ENGINE COMPLIES WITH U.S. EPA NONROAD EMISSION REQUIREMENTS FOR [Insert appropriate year reflecting when the applicable tier of emission standards for the replaced engine began to apply] ENGINES UNDER 40 CFR 1068.240. SELLING OR INSTALLING THIS ENGINE FOR ANY PURPOSE OTHER THAN TO REPLACE A NONROAD ENGINE BUILT BEFORE JANUARY 1, [Insert appropriate year reflecting when the next tier of emission standards began to apply] MAY BE A VIOLATION OF FEDERAL LAW SUBJECT TO CIVIL PENALTY.

(e) The provisions of this section may not be used to circumvent emission standards that apply to new engines under the standard-setting part.

[67 FR 68347, Nov. 8, 2002, as amended at 69 FR 39267, June 29, 2004; 70 FR 40513, July 13, 2005]

§ 1068.245 What temporary provisions address hardship due to unusual circumstances?

(a) After considering the circumstances, we may permit you to introduce into commerce engines or equipment that do not comply with emission-related requirements for a limited time if all the following conditions apply:

(1) Unusual circumstances that are clearly outside your control and that could not have been avoided with reasonable discretion prevent you from meeting requirements from this chapter.

(2) You exercised prudent planning and were not able to avoid the violation; you have taken all reasonable steps to minimize the extent of the nonconformity.

(3) Not having the exemption will jeopardize the solvency of your company.

(4) No other allowances are available under the regulations in this chapter to avoid the impending violation, including the provisions of § 1068.250.

(b) To apply for an exemption, you must send the Designated Officer a written request as soon as possible before you are in violation. In your request, show that you meet all the conditions and requirements in paragraph (a) of this section.

(c) Include in your request a plan showing how you will meet all the applicable requirements as quickly as possible.

(d) You must give us other relevant information if we ask for it.

(e) We may include reasonable additional conditions on an approval granted under this section, including provisions to recover or otherwise address the lost environmental benefit or paying fees to offset any economic gain resulting from the exemption. For example, in the case of multiple tiers of emission standards, we may require that you meet the standards from the previous tier.

(f) Add a permanent, legible label, written in block letters in English, to a readily visible part of each engine exempted under this section. This label must include at least the following items:

(1) The label heading ''EMISSION CONTROL INFORMATION''.

(2) Your corporate name and trademark.

(3) Engine displacement (in liters), rated power, and model year of the engine or whom to contact for further information.

(4) One of the following statements:

(i) If the engine does not meet any emission standards: ''THIS ENGINE IS EXEMPT UNDER 40 CFR 1068.245 FROM EMISSION STANDARDS AND RELATED REQUIREMENTS.''.

(ii) If the engine meets alternate emission standards as a condition of an exemption under this section, we may specify a different statement to identify the alternate emission standards.

[67 FR 68347, Nov. 8, 2002, as amended at 69 FR 39268, June 29, 2004; 70 FR 40513, July 13, 2005]

§ 1068.250 What are the provisions for extending compliance deadlines for small-volume manufacturers under hardship?

(a) After considering the circumstances, we may extend the compliance deadline for you to meet new or revised emission standards, as long as you meet all the conditions and requirements in this section.

(b) To be eligible for this exemption, you must qualify under the standard-setting part for special provisions for small businesses or small-volume manufacturers.

(c) To apply for an extension, you must send the Designated Officer a written request. In your request, show that all the following conditions and requirements apply:

(1) You have taken all possible business, technical, and economic steps to comply.

(i) In the case of importers of engines produced by other companies, show that you attempted to find a manufacturer capable of supplying complying products as soon as you became aware of the applicable requirements, but were unable to do so.

(ii) For all other manufacturers, show that the burden of compliance costs prevents you from meeting the requirements of this chapter.

(2) Not having the exemption will jeopardize the solvency of your company.

(3) No other allowances are available under the regulations in this chapter to avoid the impending violation.

(d) In describing the steps you have taken to comply under paragraph (c)(1) of this section, include at least the following information:

(1) Describe your business plan, showing the range of projects active or under consideration.

(2) Describe your current and projected financial status, with and without the burden of complying fully with the applicable regulations in this chapter.

(3) Describe your efforts to raise capital to comply with regulations in this chapter (this may not apply for importers).

(4) Identify the engineering and technical steps you have taken or those you plan to take to comply with regulations in this chapter.

(5) Identify the level of compliance you can achieve. For example, you may be able to produce engines that meet a somewhat less stringent emission standard than the regulations in this chapter require.

(e) Include in your request a plan showing how you will meet all the applicable requirements as quickly as possible.

(f) You must give us other relevant information if we ask for it.

(g) An authorized representative of your company must sign the request and include the statement: ''All the information in this request is true and accurate, to the best of my knowledge.''.

(h) Send your request for this extension at least nine months before the relevant deadline. If different deadlines apply to companies that are not small-volume manufacturers, do not send your request before the regulations in question apply to the other manufacturers. Otherwise, do not send your request more than three years before the relevant deadline.

(i) We may include reasonable requirements on an approval granted under this section, including provisions to recover or otherwise address the lost environmental benefit. For example, we may require that you meet a less stringent emission standard or buy and use available emission credits.

(j) We will approve extensions of up to one model year. We may review and revise an extension as reasonable under the circumstances.

(k) Add a permanent, legible label, written in block letters in English, to a readily visible part of each engine exempted under this section. This label must include at least the following items:

(1) The label heading ''EMISSION CONTROL INFORMATION''.

(2) Your corporate name and trademark.

(3) Engine displacement (in liters), rated power, and model year of the engine or whom to contact for further information.

(4) One of the following statements:

(i) If the engine does not meet any emission standards: ''THIS ENGINE IS EXEMPT UNDER 40 CFR 1068.250 FROM EMISSION STANDARDS AND RELATED REQUIREMENTS.''.

(ii) If the engine meets alternate emission standards as a condition of an exemption under this section, we may specify a different statement to identify the alternate emission standards.

[67 FR 68347, Nov. 8, 2002, as amended at 69 FR 39268, June 29, 2004; 70 FR 40514, July 13, 2005]

§ 1068.255 What are the provisions for exempting engines for hardship for equipment manufacturers and secondary engine manufacturers?

This section describes how, in unusual circumstances, we may exempt certain engines to prevent a hardship to an equipment manufacturer or a secondary engine manufacturer. This section does not apply to products that are subject to vehicle-based emission standards.

(a) *Equipment exemption.* As an equipment manufacturer, you may ask for approval to produce exempted equipment for up to 12 months. We will generally limit this to the first year that new or revised emission standards apply. Send the Designated Officer a written request for an exemption before you are in violation. In your request, you must show you are not at fault for the impending violation and

that you would face serious economic hardship if we do not grant the exemption. This exemption is not available under this paragraph (a) if you manufacture the engine you need for your own equipment or if complying engines are available from other engine manufacturers that could be used in your equipment, unless we allow it elsewhere in this chapter. We may impose other conditions, including provisions to use an engine meeting less stringent emission standards or to recover the lost environmental benefit. In determining whether to grant the exemptions, we will consider all relevant factors, including the following:

(1) The number of engines to be exempted.

(2) The size of your company and your ability to endure the hardship.

(3) The amount of time you had to redesign your equipment to accommodate a complying engine.

(4) Whether there was any breach of contract by an engine supplier.

(5) The potential for market disruption.

(b) *Engine exemption.* As an engine manufacturer, you may produce nonconforming engines for the equipment we exempt in paragraph (a) of this section. You do not have to request this exemption for your engines, but you must have written assurance from equipment manufacturers that they need a certain number of exempted engines under this section. Add a permanent, legible label, written in block letters in English, to a readily visible part of each exempted engine. This label must include at least the following items:

(1) The label heading ''EMISSION CONTROL INFORMATION''.

(2) Your corporate name and trademark.

(3) Engine displacement (in liters), rated power, and model year of the engine or whom to contact for further information.

(4) One of the following statements:

(i) If the engine does not meet any emission standards: ''THIS ENGINE IS EXEMPT UNDER 40 CFR 1068.255 FROM EMISSION STANDARDS AND RELATED REQUIREMENTS.''.

(ii) If the engine meets alternate emission standards as a condition of an exemption under this section, we may specify a different statement to identify the alternate emission standards.

(c) *Secondary engine manufacturers.* As a secondary engine manufacturer, you may ask for approval to produce exempted engines under this section for up to 12 months. We may require you to certify your engines to compliance levels above the emission standards that apply. For example, the in the case of multiple tiers of emission standards, we may require you to meet the standards from the previous tier.

(1) For the purpose of this section, a secondary engine manufacturer is a manufacturer that produces an engine by modifying an engine that is made by a different manufacturer for a different type of application. This includes, for example, automotive engines converted for use in industrial applications, or land-based engines converted for use in marine applications. This applies whether the secondary engine manufacturer is modifying a complete or partially complete engine and whether the engine was previously certified to emission standards or not. To be a secondary engine manufacturer, you must not be controlled by the manufacturer of the base engine (or by an entity that also controls the manufacturer of the base engine). In addition, equipment manufacturers that substantially modify engines become secondary engine manufacturers. For the purpose of this definition, ''substantially modify'' means changing an engine in a way that could change its emission characteristics.

(2) The provisions in paragraph (a) of this section that apply to equipment manufacturers requesting an exemption apply equally to you, except that you may manufacture the engines. Before we can approve the exemption under this section, you must commit to a plan to make up the lost environmental benefit.

(i) If you produce uncertified engines under this exemption, we will calculate the lost environmental benefit based on our best estimate of uncontrolled emission rates for your engines.

(ii) If you produce engines under this exemption that are certified to a compliance level less stringent than the

emission standards that would otherwise apply, we will calculate the lost environmental benefit based on the compliance level you select for your engines.

(3) The labeling requirements in paragraph (b) of this section apply to your exempted engines; however, if you certify engines to specific compliance levels, state on the label the compliance levels that apply to each engine.

[67 FR 68347, Nov. 8, 2002, as amended at 69 FR 39268, June 29, 2004; 70 FR 40514, July 13, 2005]

§ 1068.260 What are the provisions for temporarily exempting engines for delegated final assembly?

(a) Shipping an engine separately from an aftertreatment component that you have specified as part of its certified configuration will not be a violation of the prohibitions in § 1068.101(a)(1), if you do all the following:

(1) Apply for and receive a certificate of conformity for the engine and its emission-control system before shipment.

(2) Provide installation instructions in enough detail to ensure that the engine will be in its certified configuration if someone follows these instructions.

(3) Have a contractual agreement with an equipment manufacturer obligating the equipment manufacturer to complete the final assembly of the engine so it is in its certified configuration when installed in the equipment. This agreement must also obligate the equipment manufacturer to provide the affidavits and cooperate with the audits required under paragraph (a)(6) of this section.

(4) Include the cost of all aftertreatment components in the cost of the engine.

(5) Ship the aftertreatment components directly to the equipment manufacturer, or arrange for separate shipment by the component manufacturer to the equipment manufacturer.

(6) Take appropriate additional steps to ensure that all engines will be in their certified configuration when installed by the equipment manufacturer. At a minimum do the following:

(i) Obtain annual affidavits from every equipment manufacturer to whom you sell engines under this section. Include engines that you sell through distributors or dealers. The affidavits must list the part numbers of the aftertreatment devices that equipment manufacturers install on each engine they purchase from you under this section.

(ii) If you sell more than 50 engines per model year under this section, you must annually audit four equipment manufacturers to whom you sell engines under this section. To select individual equipment manufacturers, divide all the affected equipment manufacturers into quartiles based on the number of engines they buy from you; select a single equipment manufacturer from each quartile each model year. Vary the equipment manufacturers you audit from year to year, though you may repeat an audit in a later model year if you find or suspect that a particular equipment manufacturer is not properly installing aftertreatment devices. If you sell engines to fewer than 16 equipment manufacturers under the provisions of this section, you may instead set up a plan to audit each equipment manufacturer on average once every four model years. Audits must involve the assembling companies' facilities, procedures, and production records to monitor their compliance with your instructions, must include investigation of some assembled engines, and must confirm that the number of aftertreatment devices shipped were sufficient for the number of engines produced. Where an equipment manufacturer is not located in the United States, you may conduct the audit at a distribution or port facility in the United States. You must keep records of these audits for five years after the end of the model year and provide a report to us describing any uninstalled or improperly installed aftertreatment components. Send us these reports within 90 days of the audit, except as specified in paragraph (d) of this section.

(iii) If you sell up to 50 engines per model year under this section, you must conduct audits as described in paragraph (a)(6)(ii) of this section or

propose an alternative plan for ensuring that equipment manufacturers properly install aftertreatment devices.

(iv) If you produce engines and use them to produce equipment under the provisions of this section, you must take steps to ensure that your facilities, procedures, and production records are set up to ensure compliance with the provisions of this section, but you may meet your auditing responsibilities under this paragraph (a)(6) by maintaining a database showing how you pair aftertreatment components with the appropriate engines.

(7) Describe the following things in your application for certification:

(i) How you plan to use the provisions of this section.

(ii) A detailed plan for auditing equipment manufacturers, as described in paragraph (a)(6) of this section.

(iii) All other steps you plan to take under paragraph (a)(6) of this section.

(8) Keep records to document how many engines you produce under this exemption. Also, keep records to document your contractual agreements under paragraph (a)(3) of this section. Keep all these records for five years after the end of the model year and make them available to us upon request.

(9) Make sure the engine has the emission control information label we require under the standard-setting part. Apply an additional temporary label or tag in a way that makes it unlikely that the engine will be installed in equipment other than in its certified configuration. The label or tag must identify the engine as incomplete and include a clear statement that failing to install the aftertreatment device, or otherwise bring the engine into its certified configuration, is a violation of federal law subject to civil penalty.

(b) An engine you produce under this section becomes new when it is fully assembled, except for aftertreatment devices, for the first time. Use this date to determine the engine's model year.

(c) Once the equipment manufacturer takes possession of an engine exempted under this section, the exemption expires and the engine is subject to all the prohibitions in 40 CFR 1068.101.

(d) You must notify us within 15 days if you find from an audit or another source that an equipment manufacturer has failed to meet its obligations under this section.

(e) We may suspend, revoke, or void an exemption under this section, as follows:

(1) We may suspend or revoke your exemption for the entire engine family if we determine that any of the engines are not in their certified configuration after installation in the equipment, or if you fail to comply with the requirements of this section. If we suspend or revoke the exemption for any of your engine families under this paragraph (d), this exemption will not apply for future certificates unless you demonstrate that the factors causing the nonconformity do not apply to the other engine families. We may suspend or revoke the exemption for shipments to a single facility where final assembly occurs.

(2) We may void your exemption for the entire engine family if you intentionally submit false or incomplete information or fail to keep and provide to EPA the records required by this section.

(f) You are liable for the in-use compliance of any engine that is exempt under this section.

(g) It is a violation of the Act for any person to complete assembly of the exempted engine without complying fully with the installation instructions.

(h) You may ask us to provide a temporary exemption to allow you to complete production of your engines at different facilities, as long as you maintain control of the engines until they are in their certified configuration. We may require you to take specific steps to ensure that such engines are in their certified configuration before reaching the ultimate purchaser. You may request an exemption under this paragraph (h) in your application for certification, or in a separate submission to the Designated Compliance Officer.

[69 FR 39268, June 29, 2004, as amended at 70 FR 40514, July 13, 2005]

§ 1068.265 What provisions apply to engines that are conditionally exempted from certification?

Engines produced under an exemption for replacement engines (§ 1068.240) or for hardship (§ 1068.245, § 1068.250, or § 1068.255) may need to meet alternate emission standards as a condition of the exemption. The standard-setting part may similarly exempt engines from all certification requirements, or allow us to exempt engines from all certification requirements for certain cases, but require the engines to meet alternate standards. In these cases, all the following provisions apply:

(a) Your engines must meet the alternate standards we specify in (or pursuant to) the exemption section, and all other requirements applicable to engines that are subject to such standards.

(b) You need not apply for and receive a certificate for the exempt engines. However, you must comply with all the requirements and obligations that would apply to the engines if you had received a certificate of conformity for them, unless we specifically waive certain requirements.

(c) You must have emission data from test engines using the appropriate procedures that demonstrate compliance with the alternate standards, unless the engines are identical in all material respects to engines that you have previously certified to standards that are the same as, or more stringent than, the alternate standards.

(d) Unless we specify otherwise elsewhere in the standard-setting part, you must meet the labeling requirements in the standard-setting part, with the following exceptions:

(1) Modify the engine-family designation by eliminating the character that identifies the model year.

(2) See the provisions of the applicable exemption for appropriate language to replace the compliance statement otherwise required in the standard-setting part.

(e) You may not generate emission credits for averaging, banking, or trading with engines meeting requirements under the provisions of this section.

(f) Keep records to show that you meet the alternate standards, as follows:

(1) If your exempted engines are identical to previously certified engines, keep your most recent application for certification for the certified engine family.

(2) If you previously certified a similar engine family, but have modified the exempted engine in a way that changes it from its previously certified configuration, keep your most recent application for certification for the certified engine family, a description of the relevant changes, and any test data or engineering evaluations that support your conclusions.

(3) If you have not previously certified a similar engine family, keep all the records we specify for the application for certification and any additional records the standard-setting part requires you to keep.

(g) We may require you to send us an annual report of the engines you produce under this section.

[70 FR 40515, July 13, 2005]

Subpart D—Imports

§ 1068.301 Does this subpart apply to me?

(a) This subpart applies to you if you import into the United States engines or equipment subject to our emission standards or equipment containing engines subject to our emission standards.

(b) In general, engines that you import must be covered by a certificate of conformity unless they were built before emission standards started to apply. This subpart describes the limited cases where we allow importation of exempt or excluded engines.

(c) The U.S. Customs Service may prevent you from importing an engine if you do not meet the requirements of this subpart. In addition, U.S. Customs Service regulations may contain other requirements for engines imported into the United States (see 19 CFR Chapter I).

§ 1068.305 How do I get an exemption or exclusion for imported engines?

(a) Complete the appropriate EPA declaration form before importing any nonconforming engine. These forms are available on the Internet at *http://*

www.epa.gov/OTAQ/imports/ or by phone at 734–214–4100.

(b) If we ask for it, prepare a written request in which you do the following:

(1) Give your name, address, telephone number, and taxpayer identification number.

(2) Give the engine owner's name, address, telephone number, and taxpayer identification number.

(3) Identify the make, model, identification number, and original production year of each engine.

(4) Identify which exemption or exclusion in this subpart allows you to import a nonconforming engine and describe how your engine qualifies.

(5) Tell us where you will keep your engines if you might need to store them until we approve your request.

(6) Authorize us to inspect or test your engines as the Act allows.

(c) We may ask for more information.

(d) You may import the nonconforming engines you identify in your request if you get prior written approval from us. The U.S. Customs Service may require you to show them the approval letter. We may temporarily or permanently approve the exemptions or exclusions, as described in this subpart.

(e) Meet the requirements specified for the appropriate exemption in this part or the standard-setting part, including any labeling requirements that apply.

[67 FR 68347, Nov. 8, 2002, as amended at 69 FR 39269, June 29, 2004; 70 FR 40551, July 13, 2005]

§ 1068.310 What are the exclusions for imported engines?

If you show us that your engines qualify under one of the paragraphs of this section, we will approve your request to import such excluded engines. You must have our approval to import an engine under paragraph (a) of this section. You may, but are not required to request our approval to import the engines under paragraph (b) or (c) of this section. The following engines are excluded:

(a) *Engines used solely for competition.* Engines that you demonstrate will be used solely for competition are excluded from the restrictions on imports in § 1068.301(b), but only if they are properly labeled. See the standard-setting part for provisions related to this demonstration. Section 1068.101(b)(4) prohibits anyone from using these excluded engines for purposes other than competition.

(b) *Stationary engines.* The definition of nonroad engine in 40 CFR 1068.30 does not include certain engines used in stationary applications. Such engines may be subject to the standards of 40 CFR part 60. Engines that are excluded from the definition of nonroad engine in this part and not required to be certified to standards under 40 CFR part 60 are not subject to the restrictions on imports in § 1068.301(b), but only if they are properly labeled. Section 1068.101 restricts the use of stationary engines for non-stationary purposes unless they are certified under 40 CFR Part 60 to the same standards that would apply to nonroad engines for the same model year.

(c) *Other engines.* The standard-setting parts may exclude engines used in certain applications. For example, engines used in aircraft and very small engines used in hobby vehicles are generally excluded. Engines used in underground mining are excluded if they are regulated by the Mine Safety and Health Administration.

[67 FR 68347, Nov. 8, 2002, as amended at 69 FR 39269, June 29, 2004; 71 FR 39185, July 11, 2006]

§ 1068.315 What are the permanent exemptions for imported engines?

We may approve a permanent exemption from the restrictions on imports under § 1039.301(b) under the following conditions:

(a) *National security exemption.* You may import an engine under the national security exemption in § 1068.225, but only if it is properly labeled.

(b) *Manufacturer-owned engine exemption.* You may import a manufacturer-owned engine, as described in § 1068.215.

(c) *Replacement engine exemption.* You may import a nonconforming replacement engine as described in § 1068.240. To use this exemption, you must be a certificate holder for an engine family we regulate under the same part as the replacement engine.

(d) *Extraordinary circumstances exemption.* You may import a nonconforming

engine if we grant hardship relief as described in § 1068.245.

(e) *Small-volume manufacturer exemption.* You may import a nonconforming engine if we grant hardship relief for a small-volume manufacturer, as described in § 1068.250.

(f) *Equipment-manufacturer hardship exemption.* You may import a nonconforming engine if we grant an exemption for the transition to new or revised emission standards, as described in § 1068.255.

(g) *Delegated-assembly exemption.* You may import a nonconforming engine for final assembly under the provisions of § 1068.260. However, this does not include the staged-assembly provisions of § 1068.260(h); see § 1068.330 for importing incomplete engines.

(h) [Reserved]

(i) *Identical configuration exemption.* You may import a nonconforming engine if it is identical to certified engines produced by the same manufacturer, subject to the following provisions:

(1) You may import only the following engines under this exemption:

(i) Large nonroad spark-ignition engines (see part 1048 of this chapter).

(ii) Recreational nonroad spark-ignition engines and equipment (see part 1051 of this chapter).

(iii) Land-based nonroad diesel engines (see part 1039 of this chapter).

(2) You must meet all the following criteria:

(i) You have owned the engine for at least six months.

(ii) You agree not to sell, lease, donate, trade, or otherwise transfer ownership of the engine for at least five years, or until the engine is eligible for the exemption in paragraph (g) of this section. During this period, the only acceptable way to dispose of the engine is to destroy or export it.

(iii) You use data or evidence sufficient to show that the engine is in a configuration that is identical to an engine the original manufacturer has certified to meet emission standards that apply at the time the manufacturer finished assembling or modifying the engine in question. If you modify the engine to make it identical, you must completely follow the original manufacturer's written instructions.

(3) We will tell you in writing if we find the information insufficient to show that the engine is eligible for this exemption. In this case, we will not consider your request further until you address our concerns.

(j) *Ancient engine exemption.* If you are not the original engine manufacturer, you may import a nonconforming engine that is subject to a standard-setting part and was first manufactured at least 21 years earlier, as long as it is still in its original configuration.

[67 FR 68347, Nov. 8, 2002, as amended at 69 FR 39269, June 29, 2004; 70 FR 40515, July 13, 2005]

§ 1068.320 How must I label an imported engine with an exclusion or a permanent exemption?

(a) For engines imported under § 1068.310(a) or (b), you must place a permanent label or tag on each engine. If no specific label requirements in the standard-setting part apply for these engines, you must meet the following requirements:

(1) Attach the label or tag in one piece so no one can remove it without destroying or defacing it.

(2) Make sure it is durable and readable for the engine's entire life.

(3) Secure it to a part of the engine needed for normal operation and not normally requiring replacement.

(4) Write it in block letters in English.

(5) Make it readily visible to the average person after the engine is installed in the equipment.

(b) On the engine label or tag, do the following:

(1) Include the heading ''EMISSION CONTROL INFORMATION''.

(2) Include your full corporate name and trademark.

(3) State the engine displacement (in liters) and rated power. If the engine's rated power is not established, state the approximate power rating accurately enough to allow a determination of which standards would otherwise apply.

(4) State: ''THIS ENGINE IS EXEMPT FROM THE REQUIREMENTS OF [identify the part referenced in 40 CFR 1068.1(a) that would otherwise apply], AS PROVIDED IN [identify the

paragraph authorizing the exemption (for example, ''40 CFR 1068.315(a)'')]. INSTALLING THIS ENGINE IN ANY DIFFERENT APPLICATION MAY BE A VIOLATION OF FEDERAL LAW SUBJECT TO CIVIL PENALTY.''.

[67 FR 68347, Nov. 8, 2002, as amended at 69 FR 39269, June 29, 2004]

§ 1068.325 What are the temporary exemptions for imported engines?

You may import engines under certain temporary exemptions, subject to the conditions in this section. We may ask the U.S. Customs Service to require a specific bond amount to make sure you comply with the requirements of this subpart. You may not sell or lease one of these engines while it is in the United States. You must eventually export the engine as we describe in this section unless you get a certificate of conformity for it or it qualifies for one of the permanent exemptions in § 1068.315. Section 1068.330 specifies an additional temporary exemption allowing you to import certain engines you intend to modify.

(a) *Exemption for repairs or alterations.* You may temporarily import a nonconforming engine under bond solely to repair or alter it or the equipment in which it is installed. You may operate the engine and equipment in the United States only as necessary to repair it, alter it, or ship it to or from the service location. Export the engine directly after servicing is complete.

(b) *Testing exemption.* You may temporarily import a nonconforming engine under bond for testing if you follow the requirements of § 1068.210. You may operate the engine in the United States only to allow testing. This exemption expires one year after you import the engine, unless we approve an extension. The engine must be exported before the exemption expires.

(c) *Display exemption.* You may temporarily import a nonconforming engine under bond for display, as described in § 1068.220. This exemption expires one year after you import the engine, unless we approve your request for an extension. We may approve an extension of up to one more year for each request, but no more than three years in total. The engine must be exported by the time the exemption expires or directly after the display concludes, whichever comes first.

(d) *Export exemption.* You may temporarily import a nonconforming engine to export it, as described in § 1068.230. You may operate the engine in the United States only as needed to prepare it for export. Label the engine as described in § 1068.230.

(e) *Diplomatic or military exemption.* You may temporarily import nonconforming engines without bond if you represent a foreign government in a diplomatic or military capacity. In your request to the Designated Officer (see § 1068.305), include either written confirmation from the U.S. State Department that you qualify for this exemption or a copy of your orders for military duty in the United States. We will rely on the State Department or your military orders to determine when your diplomatic or military status expires, at which time you must export your exempt engines.

(f) *Delegated assembly exemption.* You may import a nonconforming engine for final assembly, as described in § 1068.260.

[67 FR 68347, Nov. 8, 2002, as amended at 69 FR 39269, June 29, 2004; 70 FR 40515, July 13, 2005]

§ 1068.330 How do I import engines requiring further assembly?

This section allows you to import engines in configurations different than their final configuration. This exemption is temporary, as described in paragraph (d) of this section.

(a) This section applies in the following cases:

(1) You import a partially complete engine with the intent to manufacture complete engines for which you have either a certificate of conformity or an exemption that allows you to sell completed engines.

(2) You import an uncertified complete engine with the intent to modify it for installation in an application different than its otherwise intended application (for example, you import a land-based engine to modify it for a marine application). In this case, to qualify for an exemption under this section, you need either a certificate of conformity or an exemption that allows you to sell completed engines.

(3) You import a complete or partially complete engine to modify for an application for which emission standards do not apply.

(4) You import a complete or partially complete engine for installation in equipment subject to equipment-based standards for which you have either a certificate of conformity or an exemption that allows you to sell the equipment.

(b) You may request this exemption in an application for certification. Otherwise, send your request to the Designated Officer. Your request must include:

(1) The name of the supplier of the partially complete engine, or the original manufacturer of the complete engine.

(2) A description of the certificate or exemption that will apply to the engines in the final configuration, or an explanation why a certificate or exemption is not needed.

(3) A brief description of how and where final assembly will be completed.

(4) An unconditional statement that the engines will comply with all applicable regulations in their final configuration.

(c) If we approve a temporary exemption for an engine, you may import it under the conditions in this section. If you are not a certificate holder, we may ask the U.S. Customs Service to require a specific bond amount to make sure you comply with the requirements of this subpart.

(d) These provisions are intended only to allow you to import engines in the specific circumstances identified in this section, so any exemption under this section expires when you complete the assembly of the engine in its final configuration. If the engine in its final configuration is subject to emission standards, then it must be covered by a certificate or a different exemption before you introduce it into commerce.

[67 FR 68347, Nov. 8, 2002, as amended at 70 FR 40516, July 13, 2005]

§ 1068.335 What are the penalties for violations?

(a) *All imported engines.* Unless you comply with the provisions of this subpart, importation of nonconforming engines violates sections 203 and 213(d) of the Act (42 U.S.C. 7522 and 7547(d)). You may then have to export the engines, or pay civil penalties, or both. The U.S. Customs Service may seize unlawfully imported engines.

(b) *Temporarily imported engines.* If you do not comply with the provisions of this subpart for a temporary exemption under § 1068.325 or § 1068.330, you may forfeit the total amount of the bond in addition to the sanctions we identify in paragraph (a) of this section. We will consider an engine to be exported if it has been destroyed or delivered to the U.S. Customs Service for export or other disposition under applicable Customs laws and regulations. EPA or the U.S. Customs Service may offer you a grace period to allow you to export a temporarily exempted engine without penalty after the exemption expires.

[67 FR 68347, Nov. 8, 2002, as amended at 69 FR 39270, June 29, 2004; 70 FR 40516, July 13, 2005]

Subpart E—Selective Enforcement Auditing

§ 1068.401 What is a selective enforcement audit?

(a) We may conduct or require you to conduct emission tests on your production engines in a selective enforcement audit. This requirement is independent of any requirement for you to routinely test production-line engines.

(b) If we send you a signed test order, you must follow its directions and the provisions of this subpart. We may tell you where to test the engines. This may be where you produce the engines or any other emission testing facility.

(c) If we select one or more of your engine families for a selective enforcement audit, we will send the test order to the person who signed the application for certification or we will deliver it in person.

(d) If we do not select a testing facility, notify the Designated Officer within one working day of receiving the test order where you will test your engines.

(e) You must do everything we require in the audit without delay.

[69 FR 39270, June 29, 2004]

§ 1068.405 What is in a test order?

(a) In the test order, we will specify the following things:

(1) The engine family and configuration (if any) we have identified for testing.

(2) The engine assembly plant, storage facility, or (if you import the engines) port facility from which you must select engines.

(3) The procedure for selecting engines for testing, including a selection rate.

(4) The test procedures, duty cycles, and test points, as appropriate, for testing the engines to show that they meet emission standards.

(b) We may state that we will select the test engines.

(c) We may identify alternate engine families or configurations for testing in case we determine the intended engines are not available for testing or if you do not produce enough engines to meet the minimum rate for selecting test engines.

(d) We may include other directions or information in the test order.

(e) We may ask you to show us that you meet any additional requirements that apply to your engines (closed crankcases, for example).

(f) In anticipation of a potential audit, you may give us a list of your preferred engine families and the corresponding assembly plants, storage facilities, or (if you import the engines) port facilities from which we should select engines for testing. The information would apply only for a single model year, so it would be best to include this information in your application for certification. If you give us this list before we issue a test order, we will consider your recommendations, but we may select engines differently.

(g) If you also do routine production-line testing with the selected engine family in the same time period, the test order will tell you what changes you might need to make in your production-line testing schedule.

§ 1068.410 How must I select and prepare my engines?

(a) *Selecting engines.* Select engines as described in the test order. If you are unable to select test engines this way, you may ask us to approve an alternate plan, as long as you make the request before you start selecting engines.

(b) *Assembling engines.* Produce and assemble test engines using your normal production and assembly process for that engine family.

(1) Notify us directly if you make any change in your production, assembly, or quality control processes that might affect emissions between the time you receive the test order and the time you finish selecting test engines.

(2) If you do not fully assemble engines at the specified location, we will describe in the test order how to select components to finish assembling the engines. Assemble these components onto the test engines using your documented assembly and quality control procedures.

(c) *Modifying engines.* Once an engine is selected for testing, you may adjust, repair, prepare, or modify it or check its emissions only if one of the following is true:

(1) You document the need for doing so in your procedures for assembling and inspecting all your production engines and make the action routine for all the engines in the engine family.

(2) This subpart otherwise allows your action.

(3) We approve your action in advance.

(d) *Engine malfunction.* If an engine malfunction prevents further emission testing, ask us to approve your decision to either repair the engine or delete it from the test sequence.

(e) *Setting adjustable parameters.* Before any test, we may adjust or require you to adjust any adjustable parameter to any setting within its physically adjustable range.

(1) We may adjust or require you to adjust idle speed outside the physically adjustable range as needed until the engine has stabilized emission levels (see paragraph (f) of this section). We may ask you for information needed to establish an alternate minimum idle speed.

(2) We may make or specify adjustments within the physically adjustable range by considering their effect on emission levels, as well as how likely it is someone will make such an adjustment with in-use engines.

(f) *Stabilizing emission levels.* Before you test production-line engines, you may operate the engine to stabilize the emission levels. Using good engineering judgment, operate your engines in a way that represents the way production engines will be used. You may operate each engine for no more than the greater of two periods:

(1) 50 hours.

(2) The number of hours you operated your emission-data engine for certifying the engine family (see 40 CFR part 1065, subpart E).

(g) *Damage during shipment.* If shipping an engine to a remote facility for testing under a selective enforcement audit makes necessary an adjustment or repair, you must wait until after the initial emission test to do this work. We may waive this requirement if the test would be impossible or unsafe, or if it would permanently damage the engine. Report to us, in your written report under § 1068.450, all adjustments or repairs you make on test engines before each test.

(h) *Shipping engines.* If you need to ship engines to another facility for testing, make sure the test engines arrive at the test facility within 24 hours after being selected. You may ask that we allow more time if you are unable to do this.

(i) *Retesting after invalid tests.* You may retest an engine if you determine an emission test is invalid under the standard-setting part. Explain in your written report reasons for invalidating any test and the emission results from all tests. If you retest an engine and, within ten days after testing, ask to substitute results of the new tests for the original ones, we will answer within ten days after we receive your information.

(i) *Retesting after invalid tests.* You may retest an engine if you determine an emission test is invalid. Explain in your written report reasons for invalidating any test and the emission results from all tests. If you retest an engine and, within ten days after testing, ask to substitute results of the new tests for the original ones, we will answer within ten days after we receive your information.

(j) *Retesting after reaching a fail decision.* You may retest your engines once a fail decision for the audit has been reached based on the first test on each engine under § 1068.420(c). You may test each engine up to a total of three times, but you must perform the same number of tests on each engine. You may further operate the engine to stabilize emission levels before testing, subject to the provisions of paragraph (f) of this section. We may approve retesting at other times if you send us a request with satisfactory justification.

[67 FR 68347, Nov. 8, 2002, as amended at 69 FR 39270, June 29, 2004; 70 FR 40516, July 13, 2005]

§ 1068.415 How do I test my engines?

(a) Use the test procedures specified in the standard-setting part for showing that your engines meet emission standards. The test order will give further testing instructions.

(b) If no test cells are available at a given facility, you may make alternate testing arrangements with our approval.

(c) Test at least two engines in each 24-hour period (including void tests). However, if your projected U.S. nonroad engine sales within the engine family are less than 7,500 for the year, you may test a minimum of one engine per 24-hour period. If you request and justify it, we may approve a lower testing rate.

(d) Accumulate service on test engines at a minimum rate of 6 hours per engine during each 24-hour period. The first 24-hour period for service accumulation begins when you finish preparing an engine for testing. The minimum service accumulation rate does not apply on weekends or holidays. You may ask us to approve a lower service accumulation rate. Plan your service accumulation to allow testing at the rate specified in paragraph (c) of this section. Select engine operation for accumulating operating hours on your test engines to represent normal in-use engine operation for the engine family.

(e) Test engines in the same order you select them.

[67 FR 68347, Nov. 8, 2002, as amended at 69 FR 39270, June 29, 2004]

§ 1068.420 How do I know when my engine family fails an SEA?

(a) A failed engine is one whose final deteriorated test results exceed an applicable emission standard for any regulated pollutant.

(b) Continue testing engines until you reach a pass decision for all pollutants or a fail decision for one pollutant.

(c) You reach a pass decision for the SEA requirements when the number of failed engines is less than or equal to the pass decision number in Appendix A to this subpart for the total number of engines tested. You reach a fail decision for the SEA requirements when the number of failed engines is greater than or equal to the fail decision number in Appendix A to this subpart for the total number of engines you test. An acceptable quality level of 40 percent is the basis for the pass or fail decision.

(d) Consider test results in the same order as the engine testing sequence.

(e) If you reach a pass decision for one pollutant, but need to continue testing for another pollutant, we will disregard these later test results for the pollutant with the pass decision.

(f) Appendix A to this subpart lists multiple sampling plans. Use the sampling plan for the projected sales volume you reported in your application for the audited engine family.

(g) We may choose to stop testing after any number of tests.

(h) If we test some of your engines in addition to your own testing, we may decide not to include your test results as official data for those engines if there is substantial disagreement between your testing and our testing. We will reinstate your data as valid if you show us that we made an error and your data are correct.

(i) If we rely on our test data instead of yours, we will notify you in writing of our decision and the reasons we believe your facility is not appropriate for doing the tests we require under this subpart. You may request in writing that we consider your test results from the same facility for future testing if you show us that you have made changes to resolve the problem.

§ 1068.425 What happens if one of my production-line engines exceeds the emission standards?

(a) If one of your production-line engines fails to meet one or more emission standards (see § 1068.420), the certificate of conformity is automatically suspended for that engine. You must take the following actions before your certificate of conformity can cover that engine:

(1) Correct the problem and retest the engine to show it complies with all emission standards.

(2) Include in your written report a description of the test results and the remedy for each engine (see § 1068.450).

(b) You may at any time ask for a hearing to determine whether the tests and sampling methods were proper (see subpart G of this part).

§ 1068.430 What happens if an engine family fails an SEA?

(a) We may suspend your certificate of conformity for an engine family if it fails the SEA under § 1068.420. The suspension may apply to all facilities producing engines from an engine family, even if you find noncompliant engines only at one facility.

(b) We will tell you in writing if we suspend your certificate in whole or in part. We will not suspend a certificate until at least 15 days after the engine family fails the SEA. The suspension is effective when you receive our notice.

(c) Up to 15 days after we suspend the certificate for an engine family, you may ask for a hearing to determine whether the tests and sampling methods were proper (see subpart G of this part). If we agree before a hearing that we used erroneous information in deciding to suspend the certificate, we will reinstate the certificate.

§ 1068.435 May I sell engines from an engine family with a suspended certificate of conformity?

You may sell engines that you produce after we suspend the engine family's certificate of conformity only if one of the following occurs:

(a) You test each engine you produce and show it complies with emission standards that apply.

(b) We conditionally reinstate the certificate for the engine family. We

may do so if you agree to recall all the affected engines and remedy any noncompliance at no expense to the owner if later testing shows that engines in the engine family still do not comply.

§ 1068.440 How do I ask EPA to reinstate my suspended certificate?

(a) Send us a written report asking us to reinstate your suspended certificate. In your report, identify the reason for the SEA failure, propose a remedy, and commit to a date for carrying it out. In your proposed remedy include any quality control measures you propose to keep the problem from happening again.

(b) Give us data from production-line testing showing that engines in the remedied engine family comply with all the emission standards that apply.

§ 1068.445 When may EPA revoke my certificate under this subpart and how may I sell these engines again?

(a) We may revoke your certificate for an engine family in the following cases:

(1) You do not meet the reporting requirements under this subpart.

(2) Your engine family fails an SEA and your proposed remedy to address a suspended certificate is inadequate to solve the problem or requires you to change the engine's design or emission-control system.

(b) To sell engines from an engine family with a revoked certificate of conformity, you must modify the engine family and then show it complies with the applicable requirements.

(1) If we determine your proposed design change may not control emissions for the engine's full useful life, we will tell you within five working days after receiving your report. In this case we will decide whether production-line testing will be enough for us to evaluate the change or whether you need to do more testing.

(2) Unless we require more testing, you may show compliance by testing production-line engines as described in this subpart.

(3) We will issue a new or updated certificate of conformity when you have met these requirements.

[67 FR 68347, Nov. 8, 2002, as amended at 69 FR 39270, June 29, 2004]

§ 1068.450 What records must I send to EPA?

(a) Within 30 calendar days of the end of each audit, send us a report with the following information:

(1) Describe any facility used to test production-line engines and state its location.

(2) State the total U.S.-directed production volume and number of tests for each engine family.

(3) Describe your test engines, including the engine family's identification and the engine's model year, build date, model number, identification number, and number of hours of operation before testing for each test engine.

(4) Identify where you accumulated hours of operation on the engines and describe the procedure and schedule you used.

(5) Provide the test number; the date, time and duration of testing; test procedure; initial test results before and after rounding; final test results; and final deteriorated test results for all tests. Provide the emission figures for all measured pollutants. Include information for both valid and invalid tests and the reason for any invalidation.

(6) Describe completely and justify any nonroutine adjustment, modification, repair, preparation, maintenance, or test for the test engine if you did not report it separately under this subpart. Include the results of any emission measurements, regardless of the procedure or type of equipment.

(7) Report on each failed engine as described in § 1068.425.

(b) We may ask you to add information to your written report, so we can determine whether your new engines conform with the requirements of this subpart.

(c) An authorized representative of your company must sign the following statement:

We submit this report under Sections 208 and 213 of the Clean Air Act. Our testing conformed completely with the requirements of 40 CFR part 1068. We have not changed production processes or quality-control procedures for the engine family in a way that might affect the emission control from production engines. All the information in this report is true and accurate, to the best of my

knowledge. I know of the penalties for violating the Clean Air Act and the regulations. (Authorized Company Representative)

(d) Send reports of your testing to the Designated Officer using an approved information format. If you want to use a different format, send us a written request with justification for a waiver.

(e) We may post test results on publicly accessible databases and we will send copies of your reports to anyone from the public who asks for them. We will not release information about your sales or production volumes, which is all we will consider confidential.

[67 FR 68347, Nov. 8, 2002, as amended at 69 FR 39270, June 29, 2004]

§ 1068.455 What records must I keep?

(a) We may review your records at any time, so it is important to keep required information readily available. Organize and maintain your records as described in this section.

(b) Keep paper records for testing under this subpart for one full year after you complete all the testing required for the selective enforcement audit. For additional storage, you may use any format or media.

(c) Keep a copy of the written reports described in § 1068.450.

(d) Keep the following additional records:

(1) The names of supervisors involved in each test.

(2) The name of anyone who authorizes adjusting, repairing, preparing, or modifying a test engine and the names of all supervisors who oversee this work.

(3) If you shipped the engine for testing, the date you shipped it, the associated storage or port facility, and the date the engine arrived at the testing facility.

(4) Any records related to your audit that are not in the written report.

(5) A brief description of any significant events during testing not otherwise described in the written report or in this section.

(e) If we ask, you must give us projected or actual production for an engine family. Include each assembly plant if you produce engines at more than one plant.

(f) We may ask you to keep or send other information necessary to implement this subpart.

APPENDIX A TO SUBPART E OF PART 1068—PLANS FOR SELECTIVE ENFORCEMENT AUDITING

The following tables describe sampling plans for selective enforcement audits, as described in § 1068.420:

TABLE A–1—SAMPLING PLAN CODE LETTER

Projected engine family sales	Code letter [1]	Minimum number of tests		Maximum number of tests
		To pass	To fail	
20 – 50	AA	3	5	20
20 – 99	A	4	6	30
100 – 299	B	5	6	40
300 – 499	C	5	6	50
500 +	D	5	6	60

[1] A manufacturer may optionally use either the sampling plan for code letter ''AA'' or sampling plan for code letter ''A'' for Selective enforcement Audits of engine families with annual sales between 20 and 50 engines. Additionally, the manufacturer may switch between these plans during the audit.

TABLE A–2—SAMPLING PLANS FOR DIFFERENT ENGINE FAMILY SALES VOLUMES

Stage [a]	AA		A		B		C		D	
	Pass #	Fail #	Pass #	Fail #	Pass #	Fail #	Pass #	Fail #	Pass #	Fail #
1.										
2.										
3	0									

TABLE A–2—SAMPLING PLANS FOR DIFFERENT ENGINE FAMILY SALES VOLUMES—Continued

Stage [a]	AA		A		B		C		D	
	Pass #	Fail #	Pass #	Fail #	Pass #	Fail #	Pass #	Fail #	Pass #	Fail #
4	.....		0							
5	1	5	0		0		0		0	
6	1	6	1	6	1	6	0	6	0	6
7	2	6	1	7	1	7	1	7	1	7
8	2	7	2	7	2	7	2	7	2	8
9	3	7	2	8	2	8	2	8	2	8
10	3	8	3	8	3	8	3	9	3	9
11	4	8	3	8	3	9	3	9	3	9
12	4	9	4	9	4	9	4	10	4	10
13	5	9	5	10	4	10	4	10	4	10
14	5	10	5	10	5	10	5	11	5	11
15	6	10	6	11	5	11	5	11	5	11
16	6	10	6	11	6	12	6	12	6	12
17	7	10	7	12	6	12	6	12	6	12
18	8	10	7	12	7	13	7	13	7	13
19	8	10	8	13	8	13	7	13	7	13
20	9	10	8	13	8	14	8	14	8	14
21			9	14	9	14	8	14	8	14
22			10	14	9	15	9	15	9	15
23			10	15	10	15	10	15	9	15
24			11	15	10	16	10	16	10	16
25			11	16	11	16	11	16	11	16
26			12	16	11	17	11	17	11	17
27			12	17	12	17	12	17	12	17
28			13	17	12	18	12	18	12	18
29			14	17	13	18	13	18	13	19
30			16	17	13	19	13	19	13	19
31					14	19	14	19	14	20
32					14	20	14	20	14	20
33					15	20	15	20	15	21
34					16	21	15	21	15	21

TABLE A–2—SAMPLING PLANS FOR DIFFERENT ENGINE FAMILY SALES VOLUMES—Continued

Stage [a]	AA		A		B		C		D	
	Pass #	Fail #	Pass #	Fail #	Pass #	Fail #	Pass #	Fail #	Pass #	Fail #
35					16	21	16	21	16	22
36					17	22	16	22	16	22
37					17	22	17	22	17	23
38					18	22	18	23	17	23
39					18	22	18	23	18	24
40					21	22	19	24	18	24
41							19	24	19	25
42							20	25	19	26
43							20	25	20	26
44							21	26	21	27
45							21	27	21	27
46							22	27	22	28
47							22	27	22	28
48							23	27	23	29
49							23	27	23	29
50							26	27	24	30
51									24	30
52									25	31
53									25	31
54									26	32
55									26	32
56									27	33
57									27	33
58									28	33
59									28	33
60									32	33

[a] Stage refers to the cumulative number of engines tested.

Subpart F—Reporting Defects and Recalling Engines

§ 1068.501 How do I report engine defects?

This section addresses your responsibility to investigate and report emission-related defects in design, materials, or workmanship. The provisions of this section do not limit your liability under this part or the Clean Air Act. For example, selling an engine that does not conform to your application for certification is a violation of § 1068.101(a)(1), independent of the requirements of this section.

(a) *General provisions.* As an engine manufacturer, you must investigate in certain circumstances whether engines that have been introduced into commerce in the United States have incorrect, improperly installed, or otherwise defective emission-related components or systems. You must also send us reports as specified by this section.

(1) This section addresses defects for any of the following emission-related components, or systems containing the following components:

(i) Electronic control units, aftertreatment devices, fuel-metering components, EGR-system components, crankcase-ventilation valves, all components related to charge-air compression and cooling, and all sensors associated with any of these components.

(ii) Any other component whose primary purpose is to reduce emissions.

(iii) Any other component whose failure might increase emissions of any pollutant without significantly degrading engine performance.

(2) The requirements of this section relate to defects in any of the components or systems identified in paragraph (a)(1) of this section if the defects might affect any of the parameters or specifications in Appendix II of this part or might otherwise affect an engine's emissions of any pollutant.

(3) For the purposes of this section, defects do not include damage to emission-related components or systems (or maladjustment of parameters) caused by owners improperly maintaining or abusing their engines.

(4) The requirements of this section do not apply to emission control information labels. Note however, that § 1068.101(a)(1) prohibits the sale of engines without proper labels, which also applies to misprinted labels.

(5) You must track the information specified in paragraph (b)(1) of this section. You must assess this data at least every three months to evaluate whether you exceed the thresholds specified in paragraphs (e) and (f) of this section. Where thresholds are based on a percentage of engines in the engine family, use actual sales figures for the whole model year when they become available. Use projected sales figures until the actual sales figures become available. You are not required to collect additional information other than that specified in paragraph (b)(1) of this section before reaching a threshold for an investigation specified in paragraph (e) of this section.

(6) You may ask us to allow you to use alternate methods for tracking, investigating, reporting, and correcting emission-related defects. In your request, explain and demonstrate why you believe your alternate system will be at least as effective in the aggregate in tracking, identifying, investigating, evaluating, reporting, and correcting potential and actual emissions-related defects as the requirements in this section. In this case, provide all available data necessary to demonstrate why an alternate system is appropriate for your engines and how it will result in a system at least as effective as that required under this section.

(7) If we determine that emission-related defects result in a substantial number of properly maintained and used engines not conforming to the regulations of this chapter during their useful life, we may order you to conduct a recall of your engines (see § 1068.505).

(8) Send all reports required by this section to the Designated Officer.

(9) This section distinguishes between defects and possible defects. A possible defect exists anytime there is an indication that an emission-related component or system might have a defect, as described in paragraph (b)(1) of this section.

(b) *Investigation of possible defects.* Investigate possible defects as follows:

(1) If the number of engines that have a possible defect, as defined by this

paragraph (b)(1), exceeds a threshold specified in paragraph (e) of this section, you must conduct an investigation to determine if an emission-related component or system is actually defective. You must classify an engine component or system as having a possible defect if any of the following sources of information shows there is a significant possibility that a defect exists:

(i) A warranty claim is submitted for the component, whether this is under your emission-related warranty or any other warranty.

(ii) Your quality-assurance procedures suggest that a defect may exist.

(iii) You receive any other information for which good engineering judgment would indicate the component or system may be defective, such as information from dealers, field-service personnel, hotline complaints, or engine diagnostic systems.

(2) If the number of shipped replacement parts for any individual component is high enough that good engineering judgment would indicate a significant possibility that a defect exists, you must conduct an investigation to determine if it is actually defective. Note that this paragraph (b)(2) does not require data-tracking or recording provisions related to shipment of replacement parts.

(3) Your investigation must be prompt, thorough, consider all relevant information, follow accepted scientific and engineering principles, and be designed to obtain all the information specified in paragraph (d) of this section.

(4) Your investigation needs to consider possible defects that occur only within the useful life period, or within five years after the end of the model year, whichever is longer.

(5) You must continue your investigation until you are able to show that there is no emission-related defect or you obtain all the information specified for a defect report in paragraph (d) of this section. Send us an updated defect report anytime you have significant additional information.

(6) If a component with a possible defect is used in additional engine families or model years, you must investigate whether the component may be defective when used in these additional engine families or model years, and include these results in any defect report you send under paragraph (c) of this section.

(7) If your initial investigation concludes that the number of engines with a defect is fewer than any of the thresholds specified in paragraph (f) of this section, but other information later becomes available that may show that the number of engines with a defect exceeds a threshold, then you must resume your investigation. If you resume an investigation, you must include the information from the earlier investigation to determine whether to send a defect report.

(c) *Reporting defects.* You must send us a defect report in either of the following cases:

(1) Your investigation shows that the number of engines with a defect exceeds a threshold specified in paragraph (f) of this section. Send the defect report within 21 days after the date you identify this number of defective engines. See paragraph (h) of this section for reporting requirements that apply if the number of engines with a defect does not exceed any of the thresholds in paragraph (f) of this section.

(2) You know there are emission-related defects for a component or system in a number of engines that exceeds a threshold specified in paragraph (f) of this section, regardless of how you obtain this information. Send the defect report within 21 days after you learn that the number of defects exceeds a threshold.

(d) *Contents of a defect report.* Include the following information in a defect report:

(1) Your corporate name and a person to contact regarding this defect.

(2) A description of the defect, including a summary of any engineering analyses and associated data, if available.

(3) A description of the engines that have the defect, including engine families, models, and range of production dates.

(4) An estimate of the number and percentage of each class or category of affected engines that have the defect,

and an explanation of how you determined this number. Describe any statistical methods you used under paragraph (g)(6) of this section.

(5) An estimate of the defect's impact on emissions, with an explanation of how you calculated this estimate and a summary of any emission data demonstrating the impact of the defect, if available.

(6) A description of your plan for addressing the defect or an explanation of your reasons for not believing the defects must be addressed.

(e) *Thresholds for conducting a defect investigation.* You must begin a defect investigation based on the following number of engines that may have the defect:

(1) For engines with maximum engine power at or below 560 kW:

(i) For engine families with annual sales below 500 units: 50 or more engines.

(ii) For engine families with annual sales from 500 to 50,000 units: more than 10.0 percent of the total number of engines in the engine family.

(iii) For engine families with annual sales above 50,000 units: 5,000 or more engines.

(2) For engines with maximum engine power greater than 560 kW:

(i) For engine families with annual sales below 250 units: 25 or more engines.

(ii) For engine families with annual sales at or above 250 units: more than 10.0 percent of the total number of engines in the engine family.

(f) *Thresholds for filing a defect report.* You must send a defect report based on the following number of engines that have the defect:

(1) For engines with maximum engine power at or below 560 kW:

(i) For engine families with annual sales below 1,000 units: 20 or more engines.

(ii) For engine families with annual sales from 1,000 to 50,000 units: more than 2.0 percent of the total number of engines in the engine family.

(iii) For engine families with annual sales above 50,000 units: 1,000 or more engines.

(2) For engines with maximum engine power greater than 560 kW:

(i) For engine families with annual sales below 150 units: 10 or more engines.

(ii) For engine families with annual sales from 150 to 750 units: 15 or more engines.

(iii) For engine families with annual sales above 750 units: more than 2.0 percent of the total number of engines in the engine family.

(g) *How to count defects.* (1) Track defects separately for each model year and engine family as much as possible. If information is not identifiable by model year or engine family, use good engineering judgment to evaluate whether you exceed a threshold in paragraph (e) or (f) of this section. Consider only your U.S.-directed production volume.

(2) Within an engine family, track defects together for all components or systems that are the same in all material respects. If multiple companies separately supply a particular component or system, treat each company's component or system as unique.

(3) If a possible defect is not attributed to any specific part of the engine, consider the complete engine a distinct component for evaluating whether you exceed a threshold in paragraph (e) of this section.

(4) If you correct defects before they reach the ultimate purchaser as a result of your quality-assurance procedures, count these against the investigation thresholds in paragraph (e) of this section unless you routinely check every engine in the engine family. Do not count any corrected defects as actual defects under paragraph (f) of this section.

(5) Use aggregated data from all the different sources identified in paragraph (b)(1) of this section to determine whether you exceed a threshold in paragraphs (e) and (f) of this section.

(6) If information is readily available to conclude that the possible defects identified in paragraph (b)(1) of this section are actual defects, count these toward the reporting thresholds in paragraph (f) of this section.

(7) During an investigation, use appropriate statistical methods to project defect rates for engines that you are not otherwise able to evaluate.

For example, if 75 percent of the components replaced under warranty are available for evaluation, it would be appropriate to extrapolate known information on failure rates to the components that are unavailable for evaluation. Take steps as necessary to prevent bias in sampled data. Make adjusted calculations to take into account any bias that may remain.

(h) *Investigation reports.* Once you trigger an investigation threshold under paragraph (e) of this section, you must report your progress and conclusions. In your reports, include the information specified in paragraph (d) of this section, or explain why the information is not relevant. Send us the following reports:

(1) While you are investigating, send us mid-year and end-of-year reports to describe the methods you are using and the status of the investigation. Send these status reports no later than June 30 and December 31 of each year.

(2) If you find that the number of components or systems with an emission-related defect exceeds a threshold specified in paragraph (f) of this section, send us a report describing your findings within 21 days after the date you reach this conclusion.

(3) If you find that the number of components or systems with an emission-related defect does not exceed any of the thresholds specified in paragraph (f) of this section, send us a final report supporting this conclusion. For example, you may exclude warranty claims that resulted from misdiagnosis and you may exclude defects caused by improper maintenance, improper use, or misfueling. Send this report within 21 days after the date you reach this conclusion.

(i) *Future production.* If you identify a design or manufacturing defect that prevents engines from meeting the requirements of this part, you must correct the defect as soon as possible for future production of engines in every family affected by the defect. This applies without regard to whether you are required to conduct a defect investigation or submit a defect report under this section.

[69 FR 39270, June 29, 2004]

§ 1068.505 How does the recall program work?

(a) If we make a determination that a substantial number of properly maintained and used engines do not conform to the regulations of this chapter during their useful life, you must submit a plan to remedy the nonconformity of your engines. We will notify you of our determination in writing. Our notice will identify the class or category of engines affected and describe how we reached our conclusion. If this happens, you must meet the requirements and follow the instructions in this subpart. You must remedy at your expense noncompliant engines that have been properly maintained and used, as described in § 1068.510(a)(7). You may not transfer this expense to a dealer or equipment manufacturer through a franchise or other agreement.

(b) You may ask for a hearing if you disagree with our determination (see subpart G of this part).

(c) Unless we withdraw the determination of noncompliance, you must respond to it by sending a remedial plan to the Designated Officer by the later of these two deadlines:

(1) Within 60 days after we notify you.

(2) Within 60 days after a hearing.

(d) Once you have sold an engine to the ultimate purchaser, we may inspect or test the engine only if he or she permits it, or if state or local inspection programs separately provide for it.

(e) You may ask us to allow you to conduct your recall differently than specified in this subpart, consistent with section 207(c) of the Act (42 U.S.C. 7541(c)).

(f) You may do a voluntary recall under § 1068.535, unless we have made the determination described in § 1068.535(a).

(g) For purposes of recall, *owner* means someone who owns an engine affected by a remedial plan or someone who owns a piece of equipment that has one of these engines.

[67 FR 68347, Nov. 8, 2002, as amended at 69 FR 39272, June 29, 2004; 70 FR 40516, July 13, 2005]

§ 1068.510 How do I prepare and apply my remedial plan?

(a) In your remedial plan, describe all of the following:

(1) The class or category of engines to be recalled, including the number of engines involved and the model year or other information needed to identify the engines.

(2) The modifications, alterations, repairs, corrections, adjustments, or other changes you will make to correct the affected engines.

(3) A brief description of the studies, tests, and data that support the effectiveness of the remedy you propose to use.

(4) The instructions you will send to those who will repair the engines under the remedial plan.

(5) How you will determine the owners' names and addresses.

(6) How you will notify owners; include copies of any notification letters.

(7) The proper maintenance or use you will specify, if any, as a condition to be eligible for repair under the remedial plan. Describe how these specifications meet the provisions of paragraph (e) of this section. Describe how the owners should show they meet your conditions.

(8) The steps owners must take for you to do the repair. You may set a date or a range of dates, specify the amount of time you need, and designate certain facilities to do the repairs.

(9) Which company (or group) you will assign to do or manage the repairs.

(10) If your employees or authorized warranty agents will not be doing the work, state who will and describe their qualifications.

(11) How you will ensure an adequate and timely supply of parts.

(12) The effect of proposed changes on fuel consumption, driveability, and safety of the engines you will recall; include a brief summary of the information supporting these conclusions.

(13) How you intend to label the engines you repair and where you will place the label on the engine (see § 1068.515).

(b) We may require you to add information to your remedial plan.

(c) We may require you to test the proposed repair to show it will remedy the noncompliance.

(d) Use all reasonable means to locate owners. We may require you to use government or commercial registration lists to get owners' names and addresses, so your notice will be effective.

(e) The maintenance or use that you specify as a condition for eligibility under the remedial plan may include only things you can show would cause noncompliance. Do not require use of a component or service identified by brand, trade, or corporate name, unless we approved this approach with your original certificate of conformity. Also, do not place conditions on who maintained the engine.

(f) We may require you to adjust your repair plan if we determine owners would be without their engines or equipment for an unreasonably long time.

(g) We will tell you in writing within 15 days of receiving your remedial plan whether we have approved or disapproved it. We will explain our reasons for any disapproval.

(h) Begin notifying owners within 15 days after we approve your remedial plan. If we hold a hearing, but do not change our position about the noncompliance, you must begin notifying owners within 60 days after we complete the hearing, unless we specify otherwise.

[67 FR 68347, Nov. 8, 2002, as amended at 69 FR 39273, June 29, 2004; 70 FR 40516, July 13, 2005]

§ 1068.515 How do I mark or label repaired engines?

(a) Attach a label to each engine you repair under the remedial plan. At your discretion, you may label or mark engines you inspect but do not repair.

(b) Make the label from a durable material suitable for its planned location. Make sure no one can remove the label without destroying or defacing it.

(c) On the label, designate the specific recall campaign and state where you repaired or inspected the engine.

(d) We may waive or modify the labeling requirements if we determine they are overly burdensome.

§ 1068.520 How do I notify affected owners?

(a) Notify owners by first class mail, unless we say otherwise. We may require you to use certified mail. Include the following in your notice:

(1) State: ''The U.S. Environmental Protection Agency has determined that your engine may be emitting pollutants in excess of the Federal emission standards, as defined in Title 40 of the Code of Federal Regulations. These emission standards were established to protect the public health or welfare from air pollution''.

(2) State that you (or someone you designate) will repair these engines at your expense.

(3) If we approved maintenance and use conditions in your remedial plan, state that you will make these repairs only if owners show their engines meet the conditions for proper maintenance and use. Describe these conditions and how owners should prove their engines are eligible for repair.

(4) Describe the components your repair will affect and say generally how you will repair the engines.

(5) State that the engine, if not repaired, may fail an emission inspection test if state or local law requires one.

(6) Describe any adverse effects on its performance or driveability that would be caused by not repairing the engine.

(7) Describe any adverse effects on the functions of other engine components that would be caused by not repairing the engine.

(8) Specify the date you will start the repairs, the amount of time you will need to do them, and where you will do them. Include any other information owners may need to know.

(9) Include a self-addressed card that owners can mail back if they have sold the engine (or equipment in which the engine is installed); include a space for owners to write the name and address of a buyer.

(10) State that owners should call you at a phone number you give to report any difficulty in obtaining repairs.

(11) State: ''To ensure your full protection under the emission warranty on your engine by federal law, and your right to participate in future recalls, we recommend you have your engine serviced as soon as possible. We may consider your not servicing it to be improper maintenance''.

(b) We may require you to add information to your notice or to send more notices.

(c) You may not in any communication with owners or dealers say or imply that your noncompliance does not exist or that it will not degrade air quality.

§ 1068.525 What records must I send to EPA?

(a) Send us a copy of all communications related to the remedial plan you sent to dealers and others doing the repairs. Mail or e-mail us the information at the same time you send it to others.

(b) From the time you begin to notify owners, send us a report within 25 days of the end of each calendar quarter. Send reports for six consecutive quarters or until all the engines are inspected, whichever comes first. In these reports, identify the following:

(1) The range of dates you needed to notify owners.

(2) The total number of notices sent.

(3) The number of engines you estimate fall under the remedial plan (explain how you determined this number).

(4) The cumulative number of engines you inspected under the remedial plan.

(5) The cumulative number of these engines you found needed the specified repair.

(6) The cumulative number of these engines you have repaired.

(7) The cumulative number of engines you determined to be unavailable due to exportation, theft, retirement, or other reasons (specify).

(8) The cumulative number of engines you disqualified for not being properly maintained or used.

(c) If your estimated number of engines falling under the remedial plan changes, change the estimate in your next report and add an explanation for the change.

(d) We may ask for more information.

(e) We may waive reporting requirements or adjust the reporting schedule.

(f) If anyone asks to see the information in your reports, we will follow the provisions of § 1068.10 for handling confidential information.

§ 1068.530 What records must I keep?

We may review your records at any time, so it is important that you keep required information readily available. Keep records associated with your recall campaign for three years after you send the last report we require under § 1068.525(b). Organize and maintain your records as described in this section.

(a) Keep a paper copy of the written reports described in § 1068.525.

(b) Keep a record of the names and addresses of owners you notified. For each engine, state whether you did any of the following:

(1) Inspected the engine.

(2) Disqualified the engine for not being properly maintained or used.

(3) Completed the prescribed repairs.

(c) You may keep the records in paragraph (b) of this section in any form we can inspect, including computer databases.

[69 FR 39273, June 29, 2004]

§ 1068.535 How can I do a voluntary recall for emission-related problems?

If we have made a determination that a substantial number of properly maintained and used engines do not conform to the regulations of this chapter during their useful life, you may not use a voluntary recall or other alternate means to meet your obligation to remedy the noncompliance. Thus, this section only applies where you learn that your engine family does not meet the requirements of this chapter and we have not made such a determination.

(a) To do a voluntary recall under this section, first send the Designated Officer a plan, following the guidelines in § 1068.510. Within 15 days, we will send you our comments on your plan.

(b) Once we approve your plan, start notifying owners and carrying out the specified repairs.

(c) From the time you start the recall campaign, send us a report within 25 days of the end of each calendar quarter, following the guidelines in § 1068.525(b). Send reports for six consecutive quarters or until all the engines are inspected, whichever comes first.

(d) Keep your reports and the supporting information as described in § 1068.530.

Subpart G—Hearings

§ 1068.601 What are the procedures for hearings?

If we agree to hold a hearing related to our decision to order a recall under § 1068.505, we will hold the hearing according to the provisions of 40 CFR 85.1807. For any other issues, you may request an informal hearing, as described in 40 CFR 86.1853–01.

APPENDIX I TO PART 1068—EMISSION-RELATED COMPONENTS

This appendix specifies emission-related components that we refer to for describing such things as emission-related warranty or requirements related to rebuilding engines.

I. Emission-related components include any engine parts related to the following systems:
1. Air-induction system.
2. Fuel system.
3. Ignition system.
4. Exhaust gas recirculation systems.

II. The following parts are also considered emission-related components:
1. Aftertreatment devices.
2. Crankcase ventilation valves.
3. Sensors.
4. Electronic control units.

III. Emission-related components also include any other part whose only purpose is to reduce emissions or whose failure will increase emissions without significantly degrading engine performance.

[69 FR 39273, June 29, 2004]

APPENDIX II TO PART 1068—EMISSION-RELATED PARAMETERS AND SPECIFICATIONS

This appendix specifies emission-related parameters and specifications that we refer to for describing such things as emission-related defects or requirements related to rebuilding engines.

I. Basic Engine Parameters—Reciprocating Engines.
1. Compression ratio.
2. Type of air aspiration (natural, Roots-blown, supercharged, turbocharged).
3. Valves (intake and exhaust).
a. Head diameter dimension.
b. Valve lifter or actuator type and valve lash dimension.
4. Camshaft timing.

a. Valve opening—intake exhaust (degrees from top-dead center or bottom-dead center).
b. Valve closing—intake exhaust (degrees from top-dead center or bottom-dead center).
c. Valve overlap (degrees).
5. Ports—two stroke engines (intake and/or exhaust).
a. Flow area.
b. Opening timing (degrees from top-dead center or bottom-dead center).
c. Closing timing (degrees from top-dead center or bottom-dead center).
II. Intake Air System.
1. Roots blower/supercharger/turbocharger calibration.
2. Charge air cooling.
a. Type (air-to-air; air-to-liquid).
b. Type of liquid cooling (engine coolant, dedicated cooling system).
c. Performance.
3. Temperature control system calibration.
4. Maximum allowable inlet air restriction.
III. Fuel System.
1. General.
a. Engine idle speed.
b. Engine idle mixture.
2. Carburetion.
a. Air-fuel flow calibration.
b. Idle mixture.
c. Transient enrichment system calibration.
d. Starting enrichment system calibration.
e. Altitude compensation system calibration.
f. Hot idle compensation system calibration.
3. Fuel injection for spark-ignition engines.
a. Control parameters and calibrations.
b. Idle mixture.
c. Fuel shutoff system calibration.
d. Starting enrichment system calibration.
e. Transient enrichment system calibration.
f. Air-fuel flow calibration.
g. Altitude compensation system calibration.
h. Operating pressure(s).
i. Injector timing calibration.
4. Fuel injection for compression-ignition engines.
a. Control parameters and calibrations.
b. Transient enrichment system calibration.
c. Air-fuel flow calibration.
d. Altitude compensation system calibration.
e. Operating pressure(s).
f. Injector timing calibration.
IV. Ignition System for Spark-ignition Engines.
1. Control parameters and calibration.
2. Initial timing setting.
3. Dwell setting.
4. Altitude compensation system calibration.
5. Spark plug voltage.
V. Engine Cooling System—thermostat calibration.
VI. Exhaust System—maximum allowable back pressure.
VII. System for Controlling Exhaust Emissions.
1. Air injection system.
a. Control parameters and calibrations.
b. Pump flow rate.
2. EGR system.
a. Control parameters and calibrations.
b. EGR valve flow calibration.
3. Catalytic converter system.
a. Active surface area.
b. Volume of catalyst.
c. Conversion efficiency.
4. Backpressure.
VIII. System for Controlling Crankcase Emissions.
1. Control parameters and calibrations.
2. Valve calibrations.
IX. Auxiliary Emission Control Devices (AECD).
1. Control parameters and calibrations.
2. Component calibration(s).
X. System for Controlling Evaporative Emissions.
1. Control parameters and calibrations.
2. Fuel tank.
a. Volume.
b. Pressure and vacuum relief settings.
XI. Warning Systems Related to Emission Controls.
1. Control parameters and calibrations.
2. Component calibrations.