AUTHENTICATED
U.S. GOVERNMENT
INFORMATION
GPO

construction program to ensure to its satisfaction that loan purposes are accomplished in an organized construction program.

(2) The work plan shall include the following:

(i) The names and qualifications of the proposed certification officials defined in §1753.94(a).

(ii) A listing of the proposed work projects to accomplish the loan purposes showing the estimated cost, method of performing the construction, and the proposed commencement and completion dates for each work project. The proposed work projects shall be summarized on RUS Form 157, Construction Work Plan and Cost Distribution, or a form providing essentially the same information.

(iii) The proposed source of funds for meeting cost overruns if the total estimated cost of work projects exceeds the loan budget.

(iv) A statement signed by the borrower's certification officials and the GFR that the work plan is accurate and complete.

(c) Under the certification program, the borrower shall follow all standard RUS postloan engineering and construction procedures except that the approvals shown in §1753.93(a) will be made by certification officials rather than RUS. The approvals noted in §1753.93(a)(1), (4) and (5) will be reported immediately to RUS using RUS Form 158. Approval of closeouts, §1753.93(a) (6) and (7), will be reported immediately on RUS Form 159.

(d) As the construction program progresses, the certification borrower shall request, by letter, RUS approval of any significant changes in work plan schedules and budgets and in certification officials.

§1753.95 Advance of loan funds.

Advance of loan funds needed to meet the certification borrower's current financial obligations are to be requested on RUS Form 481 for construction and engineering items supported by appropriate RUS Forms 158 and 159. For items other than construction or engineering, other supporting data shall be submitted. (See 7 CFR part 1744 subpart C.)

§1753.96 Certification addendum.

The certification borrower shall modify standard RUS forms of contract for use under the certification program by inserting an executed copy of the following certification addendum in each copy of the contract.

CERTIFICATION ADDENDUM

Permission has been obtained by the Owner to proceed with this contract under 7 CFR part 1753 subpart J, pursuant to which the references in the RUS construction document requiring approvals and other actions of the RUS Administrator will not apply unless RUS gives specific notice in writing to the affected parties that designated approval(s) or action(s) will be required. Certifications by the Contractor of amounts due and certifications of completions of work under the contract are to be construed to be rendered for the purpose of inducing the Rural Utilities Service or Rural Telephone Bank to advance funds to the Owner to make, or reimburse the Owner for, payments under this contract.

Date _____

Owner

By _____

Certifying Officer

Date _____

Contractor

By _____

Title

§§1753.97–1753.99 [Reserved]

PART 1755—TELECOMMUNICATIONS STANDARDS AND SPECIFICATIONS FOR MATERIALS, EQUIPMENT AND CONSTRUCTION

Sec.

1755.1–1755.2 [Reserved]
1755.3 Field trials.
1755.4–1755.25 [Reserved]
1755.26 RUS standard contract forms.
1755.27 Borrower contractual obligations.
1755.28 Notice and publication of listed contract forms.
1755.29 Promulgation of new or revised contract forms.
1755.30 List of telecommunications standard contract forms.
1755.31–1755.96 [Reserved]
1755.97 Incorporation by reference of telecommunications standards and specifications.
1755.98 List of telecommunications specifications included in other 7 CFR parts.

1755.99–1755.199 [Reserved]
1755.200 RUS standard for splicing copper and fiber optic cables.
1755.201–1755.369 [Reserved]
1755.370 RUS specification for seven wire galvanized steel strand.
1755.371–1755.389 [Reserved]
1755.390 RUS specifications for filled telephone cables.
1755.391–1755.396 [Reserved]
1755.397 RUS performance specification for line concentrators.
1755.398–1755.399 [Reserved]
1755.400 RUS standard for acceptance tests and measurements of telecommunications plant.
1755.401 Scope.
1755.402 Ground resistance measurements.
1755.403 Copper cable telecommunications plant measurements.
1755.404 Fiber optic cable telecommunications plant measurements.
1755.405 Voiceband data transmission measurements.
1755.406 Shield or armor ground resistance measurements.
1755.407 Data formats.
1755.408–1755.499 [Reserved]
1755.500 RUS standard for service installations at customers access locations.
1755.501 Definitions applicable to §§1755.501 through 1755.510.
1755.502 Scope.
1755.503 General.
1755.504 Demarcation point.
1755.505 Buried services.
1755.506 Aerial wire services
1755.507 Aerial cable services.
1755.508 Customer access location protection.
1755.509 Mobile homes.
1755.510 Construction and assembly unit drawings.
1755.511–1755.521 [Reserved]
1755.522 RUS general specification for digital, stored program controlled central office equipment.
1755.523–1755.699 [Reserved]
1755.700 RUS specification for aerial service wires.
1755.701 Scope.
1755.702 Copper coated steel reinforced (CCSR) aerial service wire.
1755.703 Nonmetallic reinforced (NMR) aerial service wire.
1755.704 Requirements applicable to both CCSR and NMR aerial service wires.
1755.705–1755.859 [Reserved]
1755.860 RUS specification for filled buried wires.
1755.861–1755.869 [Reserved]
1755.870 RUS specification for terminating cables.
1755.871–1755.889 [Reserved]
1755.890 RUS specification for filled telephone cables with expanded insulation.
1755.900 RUS specification for filled fiber optic cables.
1755.910 RUS specification for outside plant housings and serving area interface systems.

AUTHORITY: 7 U.S.C. 901 *et seq.*, 1921 *et seq.*, 6941 *et seq.*

§§ 1755.1–1755.2 [Reserved]

§ 1755.3 Field trials.

(a) Except as covered in Bulletin 345–3, no loan funds shall be advanced for any product if any item to be included in the project is not included in the ''List of Materials Acceptable for Use on Telephone Systems of RUS Borrowers,'' RUS Bulletin 344–2. When new items of materials or equipment are considered for acceptance by RUS or when a previously accepted item has been subjected to such major modifications that its suitability cannot be determined based on laboratory data and/or field experience, a field trial shall be required if RUS so determines. This field trial consists of limited field installations of the materials or equipment in closely monitored situations designed to determine, to RUS's satisfaction, their operational effectiveness under actual field conditions. Field trials are to be used only as a means for determining, to RUS's satisfaction, the operational effectiveness of a new or revised product under actual field conditions. Both the manufacturer and borrower are responsible for assuring that the field trial is carried out and that the required information on the product's performance is received by RUS in a timely manner. The use of materials or equipment derived from new inventions or concepts untried within the telephone industry is defined as ''an experiment'' and shall be handled as a special case using procedures considered appropriate by RUS to meet the individual experiment.

(b) To qualify for a field trial, the new and improved materials and equipment must appear to RUS to offer one or more of the following benefits:

(1) Improved performance.

(2) Decreased cost.

(3) Broader application.

(c) The item of material or equipment subject to field trial may be only part of the total amount of materials or equipment included in a bid or it

may be the key component of the facility or system provided; therefore, RUS shall have authority to require that a satisfactory plan be provided to maintain or restore service in the event that the materials and equipment fail to meet established performance requirements. RUS shall limit the quantity of new materials and equipment installed on any field trial and shall also limit the number of field trials for a given product to what RUS considers reasonable to provide the necessary information.

(d) A borrower may participate in a field trial only if, in RUS's opinion, the borrower possesses:

(1) Adequate financial resources so that no delay in the project will result from lack of funds.

(2) The financial stability to overcome difficulties which may result from an unsuccessful field trial. The borrower must be able to restore and maintain service until the manufacturer meets its financial obligations with respect to the field trial.

(3) Qualified personnel to enable it to discharge its responsibilities.

(4) A record satisfactory to RUS for maintaining equipment and plant facilities and for providing RUS with information when requested.

(5) Willingness to participate in the field trial and awareness of the effort and responsibility this entails.

(e) The test site for the field trial shall be, in RUS's opinion, readily accessible and provide the conditions, such as temperature extremes, high probability of lightning damage, etc., for which the product is being evaluated. The material or equipment involved shall be covered by an RUS specification or a suitable standard acceptable to RUS. The supplier is required to submit test data to show conformance with the applicable specification or standard. Further testing shall be performed if required by RUS personnel.

(f) A field trial shall normally continue for a minimum of six months, or for a longer period of time determined by RUS to be required to obtain conclusive data that the item either fulfills all requirements or is unacceptable. Either the borrower or supplier may terminate a field trial at any time, in accordance with their contractual agreement. Such termination, if prior to the time required by RUS, shall constitute withdrawal of the product from consideration by RUS. RUS has authority to terminate field trials based on its determination that the equipment is not performing satisfactorily and that this lack of performance may, in RUS's opinion, cause service degradation or hazards to life or property.

(g) Field trials shall be conducted in accordance with the instructions set forth in this regulation and the agreement relating to the specific application. Both the supplier and the borrower shall agree, and obtain RUS approval before the start of the trial, on the following:

(1) The specific purpose of the field trial;

(2) Ownership of items during trial;

(3) Starting date and duration;

(4) Responsibility for costs and removal of items in the event of noncompliance with the specification or purpose intended and arrangements for service continuity or restoration;

(5) Responsibility for testing, test equipment and normal operation and maintenance during the trial period;

(6) Availability of test equipment on site during the trial period; and

(7) Responsibility for spare parts and components consumed during the trial period.

(h) Both the supplier and the borrower shall keep RUS informed of the status of a field trial. These reports shall not be limited to details of problems of failures encountered during installation and subsequent operation but shall include information on progress of the field trial. If these reports are not received in accordance with the requirements of the RUS Form 399b, RUS shall have the authority to deny or suspend loan funds related to these products until the delinquent reports are received.

(i) Before a borrower purchases materials or equipment that require a field trial, prior approval must be obtained from RUS and RUS Form 399b, RUS Telecommunications Equipment Field Trial (available from the Director, Administrative Services Division, Rural Utilities Service, Room 0175, South

Building, U.S. Department of Agriculture, Washington, DC 20250) will be completed by RUS and must be signed by both the borrower and supplier as an indication that they understand their responsibilities in the field trial. Assurance must also be obtained from RUS that the ''particular item'' that is the subject of the field test is eligible for a field trial. To obtain this assurance, any proposal for use of an item on a field trial basis shall be forwarded to the Chief, Area Engineering Branch, for review and approval.

(j) Procedures for establishing field trials for the various categories of equipment after RUS has approved the 399b:

(1) *Electronic transmission equipment.* The procedure set forth in Bulletin 385–2 ''Purchasing and Installing Special Electronic Equipment'' shall be followed except that the Special Equipment Contract (Including Installation), RUS Form 397, shall be used in all purchases of electronic equipment for field trials. In addition, the borrower and supplier shall execute three copies of a ''Supplemental Agreement to Equipment Contract for Field Trial,'' RUS Form 399, or a ''Supplemental Agreement to Equipment Contract for Field Trial (Secondary—Delivery, Installation, Operation)'', RUS Form 399a, as well as three copies of the RUS Form 399b, ''RUS Telecommunications Equipment Field Trial'', and forward them, together with three copies of the executed contract and specifications, to the Chief, Area Engineering Branch. A limited number of copies of RUS Forms 399, 399a, and 399b are available from RUS upon request from the Director, Administrative Services Division, Rural Utilities Service, Room 0175, South Building, U.S. Department of Agriculture, Washington, DC 20250. Additional copies may be reproduced by the user as needed. This category includes:

(i) Voice frequency repeaters;

(ii) Trunk carriers;

(iii) Subscriber carrier;

(iv) Point-to-point radio (Microwave);

(v) Coaxial cable system electronics;

(vi) Fiber optic cable system electronics;

(vii) Multiplex equipment;

(viii) Mobile and fixed radiotelephone; and

(ix) Other items of electronic equipment associated with transmission.

(2) *Central office equipment.* The procedure set forth in Bulletin 384–1 ''Purchasing and Installing Central Office Equipment'' shall be followed except that ''The Central Office Equipment Contract (Including Installation)'', RUS Form 525, shall be used to purchase switching equipment for field trials. In addition, the borrower and supplier shall execute three copies of a ''Supplemental Agreement to Equipment Contract for Field Trial,'' RUS Form 399, or a ''Supplemental Agreement to Equipment Contract for Field Trial (Secondary—Delivery, Installation, Operation)'', RUS Form 399a, as the case may be, as well as three copies of the RUS Form 399b, ''RUS Telecommunications Equipment Field Trial'', and forward them, together with three copies of the executed contract and specification to the Chief, Area Engineering Branch. This category includes:

(i) Central office dial equipment;

(ii) Direct distance dialing equipment;

(iii) Automatic number identification equipment;

(iv) Line concentrators;

(v) Remote switching equipment; and

(vi) All other items of equipment associated with switching equipment, such as loop extenders.

(3) Protection equipment and materials, outside plant equipment and materials, and all other equipment and materials, which includes all items not covered in paragraph (j) (1) or (2) of this section, shall be handled as described in Bulletin 344–1 ''Methods of Purchasing Materials and Equipment for Use on Systems of Telephone Borrowers'' except that the borrower's purchase order form is to be used for purchasing materials and equipment in these categories. In addition, the borrower and supplier shall execute three copies of the ''Supplemental Agreement to Equipment Contract for Field Trial,'' RUS Form 399, or a ''Supplemental Agreement to Equipment Contract for Field Trial (Secondary—Delivery, Installation, Operation)'', RUS Form 399a, as the case may be, as well

as three copies of the RUS Form 399b, ''RUS Telecommunications Field Trial'', and forward them, together with three copies of the purchase order to the Chief, Area Engineering Branch.

(k) For all items except Electronic Central Office Equipment, suppliers and manufacturers must furnish warranties or guarantees satisfactory to RUS against the failure of the material and equipment used in the field trial. Terms of this warranty must not be less than the provisions of the standard warranty included in the ''Telephone System Construction Contract'', RUS Form 515, or the warranty provided for similar materials and equipment included in the ''List of Materials Acceptable for Use on Telephone Systems of RUS Borrowers'', RUS Bulletin 344–2. In lieu of a warranty, materials and equipment are sometimes furnished to RUS borrowers on a reduced or no cost basis. Terms of such arrangements are subject to RUS approval and should be fully covered in field trial proposals forwarded by borrowers to the Chief, Area Engineering Branch for review and approval. For the purchase of electronic central office equipment, suppliers and manufacturers are to provide warranties as provided in the applicable RUS contract form: RUS Form 397 for electronic equipment and RUS Form 525 for central office equipment. Forms 399 and 399a, which apply to field trials of these devices, specify that the term of the warranty does not begin until the satisfactory conclusion of the field trial.

[49 FR 28394, July 12, 1984. Redesignated at 55 FR 39397, Sept. 27, 1990]

§§ 1755.4–1755.25 [Reserved]

§ 1755.26 RUS standard contract forms.

(a) The standard loan agreement between RUS and its borrowers provides that, in accordance with applicable RUS regulations, borrowers shall use standard contract forms promulgated by RUS for construction, procurement, engineering services, and architectural services financed by a loan or guaranteed by RUS. This part implements these provisions of the RUS loan agreement and prescribes the procedures that RUS follows in promulgating standard contract forms that borrowers are required to use. Part 1753 prescribes when and how borrowers are required to use these standard forms of contracts.

(b) *Contract forms.* RUS promulgates standard contract forms, identified in § 1755.30(c), List of Standard Contract Forms, that borrowers are required to use.

[64 FR 6500, Feb. 10, 1999]

§ 1755.27 Borrower contractual obligations.

(a) *Loan agreement.* As a condition of a loan or loan guaranteed under the RE Act, borrowers are normally required to enter into RUS loan agreements pursuant to which the borrowers agree to use RUS standard contract forms for construction, procurement, engineering services, and architectural services financed in whole or in part by the RUS loan. To comply with the provisions of the loan agreements as implemented by this part, borrowers must use those contract forms identified in the list of telecommunications standard contract forms, set forth in § 1755.30(c) of this part.

(b) *Compliance.* (1) If a borrower is required by part 1753 to use a listed contract form, the borrower shall use the listed contract form in the format available from RUS. The forms shall not be retyped, changed, modified, or altered in any manner not specifically authorized in this part or approved by RUS in writing. Any modifications approved by RUS must be clearly shown so as to indicate the difference from the listed contract form.

(2) The borrower may use electronic reproductions of a contract form if the contract documents submitted for RUS approval are exact reproductions of the RUS form and include the following certification by the borrower: I (Insert name of the person.), certify that the attached (Insert name of the contract form.), between (Insert name of the parties.), dated (Insert contract date.) is an exact reproduction of RUS Form (Insert form number), dated (Insert date of RUS form).

_____

(Signature)

_____

(Title)

(Employer's Address)

(c) *Amendment*. Where a borrower has entered into a contract in the form required by 7 CFR part 1753, no change may be made in the terms of the contract, by amendment, waiver or otherwise, without the prior written approval of RUS.

(d) *Waiver*. RUS may waive for good cause, on a case-by-case basis, the requirements imposed on a borrower pursuant to this part. Borrowers seeking an RUS waiver must provide RUS with a written request explaining the need for the waiver.

(e) *Violations*. A failure on the part of the borrower to use listed contracts as prescribed in 7 CFR part 1753 is a violation of the terms of the loan agreement with RUS and RUS may exercise any and all remedies available under the terms of the agreement or otherwise.

[64 FR 6500, Feb. 10, 1999]

§ 1755.28 Notice and publication of listed contract forms.

(a) *Notice*. Upon initially entering a loan agreement with RUS, borrowers will be provided with all listed contract forms. Thereafter, new or revised listed contract forms promulgated by RUS, including RUS approved exceptions and alternatives, will be sent by regular or electronic mail to the borrower's address as identified in its loan agreement with RUS.

(b) *Availability*. Listed contract forms are published by RUS. Interested parties may obtain the forms from the Rural Utilities Service, Program Development and Regulatory Analysis, U.S. Department of Agriculture, Stop 1522, Washington DC 20250–1522, telephone number (202) 720–8674. The list of contract forms can be found in § 1755.30(c).

[64 FR 6500, Feb. 10, 1999]

§ 1755.29 Promulgation of new or revised contract forms.

RUS may, from time to time, promulgate new contract forms or revise or eliminate existing contract forms. In so doing, RUS shall publish a notice of rulemaking in the FEDERAL REGISTER announcing, as appropriate, a revision in, or a proposal to amend § 1755.30(c), List of telecommunications standard contract forms. The amendment may change the existing identification of a listed contract form by, for example, changing the issuance date of the listed contract form or identifying a new required contract form. The notice of rulemaking will describe the new standard contract form or substantive change in the listed contract form, as the case may be, and the issues involved. The standard contract form or relevant portions thereof may be appended to the supplementary information section of the notice of rulemaking. As appropriate, the notice of rulemaking shall provide an opportunity for interested persons to provide comments. RUS shall send, by regular or electronic mail, a copy of each such FEDERAL REGISTER document to all borrowers.

[64 FR 6500, Feb. 10, 1999]

§ 1755.30 List of telecommunications standard contract forms.

(a) *General*. The following is a list of RUS telecommunications program standard contract forms for procurement, construction, engineering services, and architectural services. Borrowers are required to use these contract forms by the terms of their RUS loan agreements implemented by part 1753 and this part.

(b) *Issuance Date*. Where part 1753 requires the use of a standard contract form in connection with RUS financing, the borrower shall use the appropriate form identified in § 1755.30(c), List of Telecommunications Standard Contract Forms, published as of the date the borrower releases the plans and specifications to solicit bids or price quotes.

(c) *List of telecommunications standard contract forms*. (1) RUS Form 157, issued 10–77, Construction Work Plan and cost Distribution—Telephone.

(2) RUS Form 158, issued 10–77, Certification of Contract or Force Account Approval.

(3) RUS Form 159, issued 10–77, Summary of Completed Construction.

(4) RUS Form 168b, issued 2–04, Contractor's Bond.

(5) RUS Form 168c, issued 2–04, Contractor's Bond.

(6) RUS Form 181a, issued 3–66, Certificate of Completion (Force Account Construction).

(7) RUS Form 187, issued 2–04, Certificate of Completion, Contract Construction.

(8) RUS Form 213, issued 2–04, Certificate (Buy American).

(9) RUS Form 216, issued 7–67, Construction Change Order.

(10) RUS Form 217, issued 3–97, Postloan Engineering Services Contract—Telecommunications Systems.

(11) RUS Form 220, issued 6–98, Architectural Services Contract.

(12) RUS Form 224, issued 2–04, Waiver and Release of Lien.

(13) RUS Form 231, issued 2–04, Certificate of Contractor.

(14) RUS Form 238, issued 2–04, Construction or Equipment Contract Amendment.

(15) RUS Form 242, issued 11–58, Assignment of Engineering Service Contract.

(16) RUS Form 245, issued 11–75, Engineering Services Contract, Special Services—Telephone.

(17) RUS Form 257, issued 2–04, Contract to Construct Buildings.

(18) RUS Form 257a, issued 10–69, Contractor's Bond.

(19) RUS Form 274, issued 6–81, Bidder's Qualifications.

(20) RUS Form 276, issued 5–59, Bidder's Qualifications for Buried Plant Construction.

(21) RUS Form 281 issued 5–61, Tabulation of Materials Furnished by Borrower.

(22) RUS Form 282, issued 11–53, Subcontract (Under Construction or Equipment Contracts).

(23) RUS Form 284, issued 4–72, Final Statement of Cost for Architectural Service and Certificate of Architect.

(24) RUS Form 307, issued 2–04, Bid Bond.

(25) RUS Form 396, issued 3–64, Certificate of Completion—Special Equipment Contract (Including Installation).

(26) RUS Form 396a, issued 3–64, Certificate of Completion—Special Equipment Contract (Not Including Installation).

(27) RUS Form 397, issued September 25, 2000, Special Equipment Contract (Including Installation).

(28) RUS Form 397f, issued 2–63, Contractor's Bond (Special Telephone Equipment).

(29) Addendum No. 1 to RUS Form 397, issued 7–78, Special Equipment Contract (Including Installation).

(30) RUS Form 398, issued 11–62, Special Equipment Contract (Not Including Installation).

(31) RUS Form 399, issued 8–82, Supplemental Agreement to Equipment Contract for Field Trial.

(32) RUS Form 399a, issued 8–82, Supplemental Agreement to Equipment Contract for Field Trial (Secondary-Delivery, Installation, Operation).

(33) RUS Form 506, issued 3–97, Statement of Engineering Fee—Telecommunications.

(34) RUS Form 515, issued September 17, 2001, Telecommunications Systems Construction Contract (Labor and Materials).

(35) RUS Form 517, issued 9–64, Results of Acceptance Tests

(36) RUS Form 525, issued 7–94, Central Office Equipment Contract (Including Installation).

(37) Addendum to RUS Form 525, issued 7–94, Central Office Equipment Contract (Including Installation) and RUS Form 545 Central Office Equipment Contract (Not Including Installation).

(38) RUS Form 525a, issued 10–62, Contractor's Bond (Central Office Equipment).

(39) RUS Form 526, issued 8–66, Construction Contract Amendment.

(40) RUS Form 527, issued 3–71, Statement of Construction, Telephone System '' Outside Plant.

(41) RUS Form 545, issued November 4, 1999, Central Office Equipment Contract (Not Including Installation).

(42) RUS Form 553, issued 5–67, Check List for Review of Plans and Specifications.

(43) RUS Form 724 issued 10–63, Final Inventory, Telephone Construction Contract.

(44) RUS Form 724a issued 4–61, Final Inventory, Telephone Construction—Telephone Construction Contract (Labor and Materials), columns 1–8.

(45) RUS Form 724b issued 3–61, Final Inventory, Telephone Construction Contract (Labor and Materials), columns 9–14.

(46) RUS Form 744, issued 2–62, Certificate of Contractor and Indemnity Agreement.

(47) RUS Form 752a, issued 5–66, Certificate of Completion Central Office Equipment-Not Including Installation.

(48) RUS Form 754, issued 6–66, Certificate of Completion and Certificate of Contractor and Indemnity Agreement.

(49) RUS Form 771, Issued 10–75, Summary of Work Orders (Inspected by RUS Field Engineer).

(50) RUS Form 771a, issued 10–75, Summary of Work Orders (Inspected by Licensed Engineer or Borrower's Staff Engineer).

(51) RUS Form 773, issued 12–90, Miscellaneous Construction Work and Maintenance Services Contract.

(52) RUS Form 787, issued 8–63, Supplement A to Construction Contract.

(53) RUS Form 817, issued 6–60, Final Inventory, Telephone Force Account Construction.

(54) RUS Form 817a, issued 6–60, Final Inventory, Telephone Force Account Construction, columns 1–8.

(55) RUS Form 817b, issued 6–60, Final Inventory, Telephone Force Account Construction, Columns 9–14.

(56) RUS Form 835, issued 3–66, Preloan Engineering Service Contract, Telephone System Design.

[64 FR 6501, Feb. 10, 1999, as amended at 64 FR 53887, Oct. 5, 1999; 65 FR 51750, Aug. 25, 2000; 69 FR 7111, Feb. 13, 2004]

§§ 1755.31–1755.96 [Reserved]

§ 1755.97 Incorporation by reference of telecommunications standards and specifications.

The following telecommunications bulletins have been approved for incorporation by reference by the Director of the Office of the Federal Register in accordance with 5 U.S.C. 552(a) and 1 CFR part 51. These bulletins contain construction standards and specifications for materials and equipment and may be obtained from the Rural Utilities Service, Program Development and Regulatory Analysis, 1400 Independence Ave., SW, Stop 1522, Room 4028 South Building, Washington, DC 20250–1522. The bulletins are available for inspection at RUS, at the address above, and at the National Archives and Records Administration (NARA). For information on the availability of this material at NARA, call 202–741–6030, or go to: *http://www.archives.gov/federal_register/code_of_federal_regulations/ibr_locations.html*. These materials are incorporated as they exist on the date of the approval and notice of any change in these materials will be published in the FEDERAL REGISTER.The terms ''RUS form'', ''RUS standard form'', ''RUS specification'', and ''RUS bulletin'' have the same meaning as the terms ''REA form'', ''REA standards form'', ''REA specification'', and ''REA bulletin'', respectively, unless otherwise indicated. The table of bulletins follows:

RUS Bulletin No.	Specification No.	Date last issued	Title of standard or specification
345–39		Aug. 19, 1985	RUS specification for telephone station protectors.
345–50	PE–60	Sept. 1979	RUS specification for trunk carrier systems.
345–54	PE–52	Dec. 1971	RUS specification for telephone cable splicing connectors.
345–55	PE–61	Dec. 1973	RUS specification for central office loop extenders and loop extender voice frequency repeater combinations.
345–65	PE–65	Mar. 22, 1985	Specification for shield bonding connectors.
345–66	PE–64	Sept. 1979	RUS specification for subscriber carrier systems.
345–69	PE–29	Jan. 1978	RUS specification for two-wire voice frequency repeater equipment.
345–72	PE–74	Oct. 1985	RUS specification for filled splice closures.
345–78	PE–78	Feb. 1980	RUS specification for carbon arrester assemblies for use in protectors.
345–180	Form 397a	Jan. 1963	RUS specifications for voice frequency repeaters and voice frequency repeatered trunks.
345–183	Form 397d	June 1970	RUS design specifications for point-to-point microwave radio systems.
345–184	Form 397e	May 1971	RUS design specifications for mobile and fixed dial radio telephone equipment.
1728F–700		9-2-93	RUS Specification for Wood Poles, Stubs and Anchor Logs
1753F–150	Form 515a	9/17/01	Specifications and Drawings for Construction of Direct Buried Plant.

RUS Bulletin No.	Specification No.	Date last issued	Title of standard or specification
1753F–151	Form 515b	9/12/01	Specifications and Drawings for Construction of Underground Plant.
1753F–152	Form 515c	9/17/01	Specifications and Drawings for Construction of Aerial Plant.
1753F–153	Form 515d	9/17/01	Specifications and Drawings for Service Installation at Customer Access Locations.

[48 FR 57470, Dec. 30, 1983]

EDITORIAL NOTE: For FEDERAL REGISTER citations affecting §1755.97, see the List of CFR Sections Affected, which appears in the Finding Aids section of the printed volume and on GPO Access.

§ 1755.98 List of telecommunications specifications included in other 7 CFR parts.

The following specifications are included throughout 7 CFR chapter XVII. These specifications are not incorporated by reference elsewhere in the chapter. The terms ''RUS form,'' ''RUS standard form,'' ''RUS specification,'' and ''RUS bulletin'' have the same meaning as the terms ''REA form,'' ''REA standard form,'' ''REA specification,'' and ''REA bulletin,'' respectively, unless otherwise indicated. The list of specifications follows:

Section	Issue date	Title
1728.202	09–02–93	RUS Specification for Quality Control and Inspection of Timber Products.

§§ 1755.99–1755.199 [Reserved]

§ 1755.200 RUS standard for splicing copper and fiber optic cables.

(a) *Scope.* (1) This section describes approved methods for splicing plastic insulated copper and fiber optic cables. Typical applications of these methods include aerial, buried, and underground splices.

(2) American National Standard Institute/National Fire Protection Association (ANSI/NFPA) 70, 1993 National Electrical Code (NEC) referenced in this section is incorporated by reference by RUS. This incorporation by reference was approved by the Director of the Federal Register in accordance with 5 U.S.C. 552(a) and 1 CFR part 51. A copy of the ANSI/NFPA 1993 NEC standard is available for inspection during normal business hours at RUS, room 2845, U.S. Department of Agriculture, Washington, DC 20250–1500, or at the National Archives and Records Administration (NARA). For information on the availability of this material at NARA, call 202–741–6030, or go to: *http://www.archives.gov/federal_register/code_of_federal_regulations/ibr_locations.html.* Copies are available from NFPA, Batterymarch Park, Quincy, Massachusetts 02269, telephone number 1 (800) 344–3555.

(3) American National Standard Institute/Institute of Electrical and Electronics Engineers, Inc. (ANSI/IEEE), 1993 National Electrical Safety Code (NESC) referenced in this section is incorporated by reference by RUS. This incorporation by reference was approved by the Director of the Federal Register in accordance with 5 U.S.C. 552(a) and 1 CFR part 51. A copy of the ANSI/IEEE 1993 NESC standard is available for inspection during normal business hours at RUS, room 2845, U.S. Department of Agriculture, Washington, DC 20250–1500, or at the National Archives and Records Administration (NARA). For information on the availability of this material at NARA, call 202–741–6030, or go to: *http://www.archives.gov/federal_register/code_of_federal_regulations/ibr_locations.html.* Copies are available from IEEE Service Center, 455 Hoes Lane, Piscataway, New Jersey 08854, telephone number 1 (800) 678–4333.

(b) *General.* (1) Only Rural Utilities Service (RUS) accepted filled cable and splicing materials shall be used on outside plant projects financed by RUS.

(2) The installation instructions provided by the manufacturer of splicing materials shall be followed except where those instructions conflict with the procedures specified in this section.

(3) Precautions shall be taken to prevent the ingress of moisture and other contaminants during all phases of the splicing installation. When an uncompleted splice must be left unattended, it shall be sealed to prevent the ingress of moisture and other contaminants.

(4) Minor sheath damage during construction may be repaired if the repair is completed immediately and approved by the borrower's resident project representative. Minor damage is typically repaired by:

(i) Scuffing the cable sheath associated with the damaged area;

(ii) Applying several layers of DR tape over the scuffed and damaged area;

(iii) Applying several layers of plastic tape over the DR tape; and

(iv) If damage is severe enough to rupture the cable shield, a splice closure shall be installed.

(5) All splice cases installed on RUS toll trunk and feeder cables shall be filled, whether aerial, buried, or underground.

(c) *Splicing considerations for copper cables*—(1) *Preconstruction testing*. It is desirable that each reel of cable be tested for grounds, opens, shorts, crosses, and shield continuity before the cable is installed. However, manufacturer supplied test results are acceptable. All cable pairs shall be free from electrical defects.

(2) *Handling precautions*. The cable manufacturer's instructions concerning pulling tension and bending radius shall be observed. Unless the cable manufacturer's recommendation is more stringent, the minimum bending radius shall be 10 times the cable diameter for copper cables and 20 times the cable diameter for fiber optic cables.

(3) *Cable sheath removal*. (i) The length of cable sheath to be removed shall be governed by the type of splicing hardware used. Follow the splice case manufacturer's recommendations. For pedestals or large pair count splice housings, consider removing enough cable sheath to allow the conductors to extend to the top of the pedestal and then to hang downward to approximately 15 centimeters (cm) (6 inches (in.)) above the baseplate.

(ii) Caution shall be exercised to avoid damaging the conductor insulation when cutting through the cable shield and removing the shield. Sharp edges and burrs shall be removed from the cut end of the shield.

(4) *Shield bonding and grounding*. For personnel safety, the shields of the cables to be spliced shall be bonded together and grounded before splicing activities are started. (See paragraphs (g)(2), and (g)(5)(i) through (g)(5)(iii) of this section for final bonding and grounding provisions.)

(5) *Binder group identification*. (i) Color coded plastic tie wraps shall be placed loosely around each binder group of cables before splicing operations are attempted. The tie wraps shall be installed as near the cable sheath as practicable and shall conform to the same color designations as the binder ribbons. Twisted wire pigtails shall not be used to identify binder groups due to potential transmission degradation.

(ii) The standard insulation color code used to identify individual cable pairs within 25-pair binder groups shall be as shown in Table 1:

TABLE 1—CABLE PAIR IDENTIFICATION WITHIN BINDER GROUPS

Pair No.	Color	
	Tip	Ring
1	White	Blue.
2	White	Orange.
3	White	Green.
4	White	Brown.
5	White	Slate.
6	Red	Blue.
7	Red	Orange.
8	Red	Green.
9	Red	Brown.
10	Red	Slate.
11	Black	Blue.
12	Black	Orange.
13	Black	Green.
14	Black	Brown.
15	Black	Slate.
16	Yellow	Blue.
17	Yellow	Orange.
18	Yellow	Green.
19	Yellow	Brown.
20	Yellow	Slate.
21	Violet	Blue.
22	Violet	Orange.
23	Violet	Green.

TABLE 1—CABLE PAIR IDENTIFICATION WITHIN BINDER GROUPS—Continued

Pair No.	Color	
	Tip	Ring
24	Violet	Brown.
25	Violet	Slate.

(iii) The standard binder ribbon color code used to designate 25-pair binder groups within 600-pair super units shall be as shown in Table 2:

TABLE 2—CABLE BINDER GROUP IDENTIFICATION

Group No.	Color of bindings	Group pair count
1	White-Blue	1–25
2	White-Orange	26–50
3	White-Green	51–75
4	White-Brown	76–100
5	White-Slate	101–125
6	Red-Blue	126–150
7	Red-Orange	151–175
8	Red-Green	176–200
9	Red-Brown	201–225
10	Red-Slate	226–250
11	Black-Blue	251–275
12	Black-Orange	276–300
13	Black-Green	301–325
14	Black-Brown	326–350
15	Black-Slate	351–375
16	Yellow-Blue	376–400
17	Yellow-Orange	401–425
18	Yellow-Green	426–450
19	Yellow-Brown	451–475
20	Yellow-Slate	476–500
21	Violet-Blue	501–525
22	Violet-Orange	526–550
23	Violet-Green	551–575
24	Violet-Brown	576–600

(iv) Super-unit binder groups shall be identified in accordance with Table 3:

TABLE 3—SUPER-UNIT BINDER COLORS

Pair numbers	Binder color
1–600	White.
601–1200	Red.
1201–1800	Black.
1801–2400	Yellow.
2401–3000	Violet.
3001–3600	Blue.
3601–4200	Orange.
4201–4800	Green.
4801–5400	Brown.
5401–6000	Slate.

(v) Service pairs in screened cables shall be identified in accordance with Table 4:

TABLE 4—SCREENED CABLE SERVICE PAIR IDENTIFICATION

Service pair No.	Color	
	Tip	Ring
1	White	Red.
2	White	Black.
3	White	Yellow.
4	White	Violet.
	Red	Black.
6	Red	Yellow.
7	Red	Violet.
8	Black	Yellow.
9	Black	Violet.

(6) *Cleaning conductors.* It is not necessary to remove the filling compound from cable conductors before splicing. However, it is permissible to wipe individual conductors with clean paper towels or clean cloth rags. No cleaning chemicals, etc., shall be used. Caution shall be exercised to maintain individual cable pair and binder group identity. Binder group identity shall be maintained by using color coded plastic tie wraps. Individual pair identification shall be maintained by carefully twisting together the two conductors of each pair.

(7) *Expanded plastic insulated conductor (PIC) precautions.* Solid PIC and expanded (foam or foam skin) PIC are spliced in the same manner, using the same tools and materials and, in general, should be treated the same. However, the insulation on expanded PIC is much more fragile than solid PIC. Twisting or forming expanded PIC into extremely compact splice bundles and applying excessive amounts of tension when tightening tie wraps causes shiners and, thus shall be avoided.

(8) *Splice connectors.* (i) Only RUS accepted filled splice connectors shall be used on outside plant projects financed by RUS.

(ii) Specialized connectors are available for splicing operations such as butt splices, in line splices, bridge taps, clearing and capping, and multiple pair splicing operations. The splice connector manufacturer's recommendations shall be followed concerning connector selection and use.

(iii) Caution shall be exercised to maintain conductor and pair association both during and after splicing operations.

(iv) Splicing operations that involve pairs containing working services shall

utilize splice connectors that permit splicing without the interruption of service.

(9) *Piecing out conductors.* Conductors may be pieced-out to provide additional slack or to repair damaged conductors. However, the conductors shall be pieced-out with conductors having the same gauge and type and color of insulation. The conductors used for piecing-out shall be from cables having RUS acceptance.

(10) *Splice organization.* Spliced pair bundles shall be arranged in firm layups with minimum conductor tension in accordance with the manufacturer's instructions.

(11) *Binder tape.* Perforated nonhygroscopic and nonwicking binder tape should be applied to splices housed in filled splice cases. The binder tape allows the flow of filling compound while holding the splice bundles near the center of the splice case to allow adequate coverage of filling compound.

(12) *Cable tags.* Cables shall be identified by a tag indicating the cable manufacturer's name, cable size, date of placement, and generic route information. Information susceptible to changes caused by future cable throws and rearrangements should not be included. Tags on load coil stubs shall include the serial number of the coil case, the manufacturer's name, and the inductance value.

(13) *Screened cable.* Screened PIC cable is spliced in the same manner as nonscreened PIC cable. However, special considerations are necessary due to differences in the cable design. The transmit and receive bundles of the cable shall be separated and one of the bundles shall be wrapped with shielding material in accordance with the cable manufacturer's recommendations. When acceptable to the cable manufacturer, it is permissible to use either the scrap screening tape removed from the cable during the sheath opening process provided the screening tape is edge coated or new pressure sensitive aluminum foil tape over polyethylene tape.

(14) *Service wire connections.* (i) Buried service wires may be spliced directly to cable conductors inside pedestals using the same techniques required for branch cables. Buried service wires may also be terminated on terminal blocks inside pedestals in areas where high service order activity or fixed count cable administration policies require terminal blocks. However, only RUS accepted terminal blocks equipped with grease or gel filled terminations to provide moisture and corrosion resistance shall be used.

(ii) Only filled terminal blocks having RUS acceptance shall be used on aerial service wire connections.

(15) *Copper cable testing.* Copper cable testing shall be performed in accordance with RUS Bulletin 345–63, ''RUS Standard for Acceptance Tests and Measurements of Telephone Plant,'' PC–4, (Incorporated by reference at § 1755.97).

(16) *Cable acceptance.* Installed cable shall be tested and pass the inventory and acceptance testing specified in the Telephone System Construction Contract (Labor and Materials), RUS Form 515. The tests and inspections shall be witnessed by the borrower's resident project representative. All conductors shall be free from grounds, shorts, crosses, splits, and opens.

(d) *Splice arrangements for copper cables*—(1) *Service distribution closures.* (i) Ready access closures permit cable splicing activities and the installation of filled terminal blocks for service wire connections in the same closure. Ready access designs shall allow service technicians direct access to the cable core as well as the terminal block.

(ii) Fixed count terminals shall restrict service technician access to the cable core. Predetermined cable pairs shall be spliced to the terminal leads or stub cable in advance of service assignments.

(2) *Aerial splices.* Aerial splice cases accommodate straight splices, branch splices, load coils, and service distribution terminals. Aerial splicing arrangements having more than 4 cables spliced in the same splice case are not recommended. Stub cabling to a second splice case to avoid a congested splice is acceptable.

(3) *Buried splices.* (i) Direct buried splice cases accommodate straight splices, branch splices, and load coils. Direct buried splices shall be filled and

shall be used only when above ground splicing in pedestals is not practicable.

(ii) A treated plank or equivalent shall be placed 15 cm (6 in.) above the buried splice case to prevent damage to the splice case from future digging. Where a firm base for burying a splice cannot be obtained, a treated plank or equivalent shall be placed beneath the splice case.

(iii) Each buried splice shall be identified for future locating. One method of marking the splice point is the use of a warning sign. Another method is the burying of an electronic locating device.

(4) *BD-type pedestals.* (i) BD-type pedestals are housings primarily intended to house, organize, and protect cable terminations incorporating splice connectors, ground lugs, and load coils. Activities typically performed in pedestals are cable splicing, shield bonding and grounding, loading, and connection of subscriber service drops.

(ii) The recommended splice capacities for BD-type pedestals are shown in Table 5. However, larger size pedestals are permissible if service requirements dictate their usefulness. Table 5 is as follows:

TABLE 5—SPLICE CAPACITIES FOR BD-TYPE PEDESTALS

Pedestal type	Maximum straight splice pair capacity using single pair connectors or multiple pair splice modules	Maximum load splice pair capacity using single pair connectors or multiple pair splice modules (see note 1)
BD3, BD3A	100 Pair	50 Pair.
BD4, BD4A	200 Pair	100 Pair.
BD5, BD5A	600 Pair	300 Pair.
BD7	1200 Pair	600 Pair.
BD14, BD14A	100 Pair	50 Pair.
BD15, BD15A	400 Pair	200 Pair.
BD16, BD16A	600 Pair	300 Pair.

Note 1: This table refers to load coil cases that are to be direct buried with stub cables extending into the pedestal for splicing. Requirements involving individual coil arrangements inside the pedestal should be engineered on a case-by-case basis.

(iii) Special distribution pedestals having a divider plate for mounting filled terminal blocks are available. Distribution pedestals are also equipped with service wire channels for installation of buried service wires without disturbing the cabling and gravel inside the base of the pedestal. Distribution pedestals are recommended in locations where the connection of service wires is required.

(5) *Large pair count splice housings.* Large pair count splice housings are recommended for areas not suitable for man- holes. The recommended capacities are shown in Table 6:

TABLE 6—SPLICE CAPACITIES FOR LARGE COUNT HOUSINGS

Housing type	Maximum straight splice pair capacity using single pair connectors or multiple pair splice modules	Maximum load splice pair capacity using single pair connectors or multiple pair splice modules (see note 1)
BD 6000	6,000 Pair	3,000 Pair.
BD 8000	8,000 Pair	4,000 Pair.
BD 10000	10,000 Pair	5,000 Pair.

(6) *Pedestal restricted access inserts.* Restricted access inserts may be used to protect splices susceptible to unnecessary handling where subsequent work activities are required or expected to occur after splices have been completed. Restricted access inserts also provide moisture protection in areas susceptible to temporary flooding. A typical restricted access insert is shown in Figure 1:

FIGURE 1

PEDESTAL RESTRICTED ACCESS INSERT

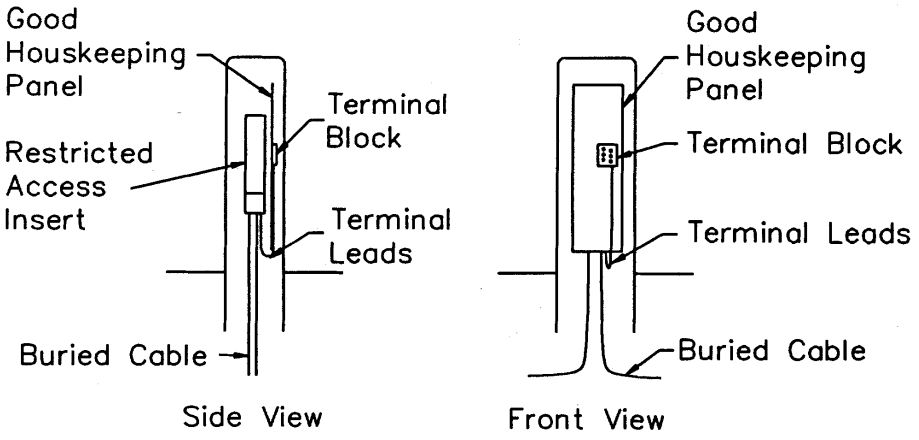

(7) *Serving Area Interface (SAI) Systems.* SAI systems provide the cross-connect point between feeder and distribution cables. Connection of feeder to distribution pairs is accomplished by placing jumpers between connecting blocks. Only RUS accepted connecting blocks having grease or gel filled terminations to provide moisture and corrosion resistance shall be used.

(8) *Buried cable splicing arrangements.* Typical buried cable splicing arrangements are illustrated in Figures 2 through 5:

FIGURE 2
SERVICE WIRE CONNECTION TO BURIED CABLE

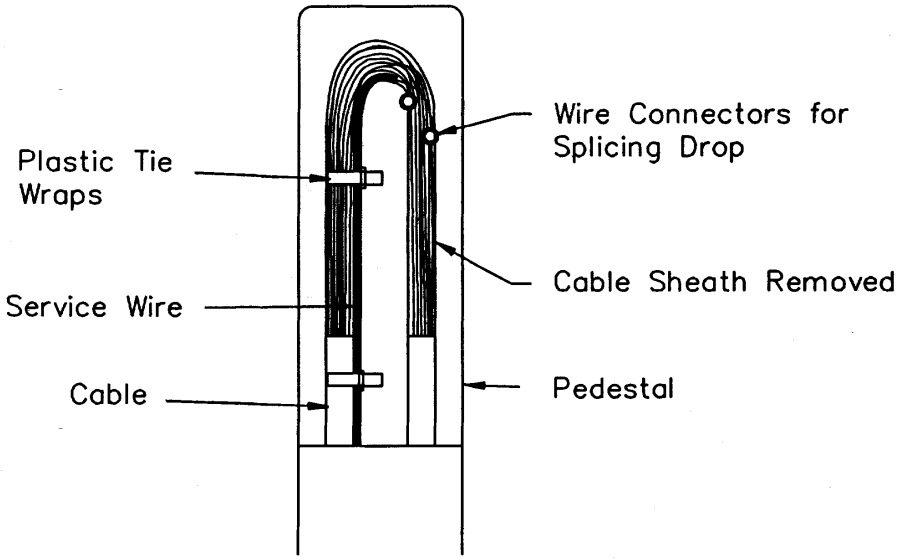

Note: See Figures 13 through 16 for cable tags, tie wraps, and bonding and grounding details.

FIGURE 3

TYPICAL SPLICE USING SINGLE PAIR CONNECTORS

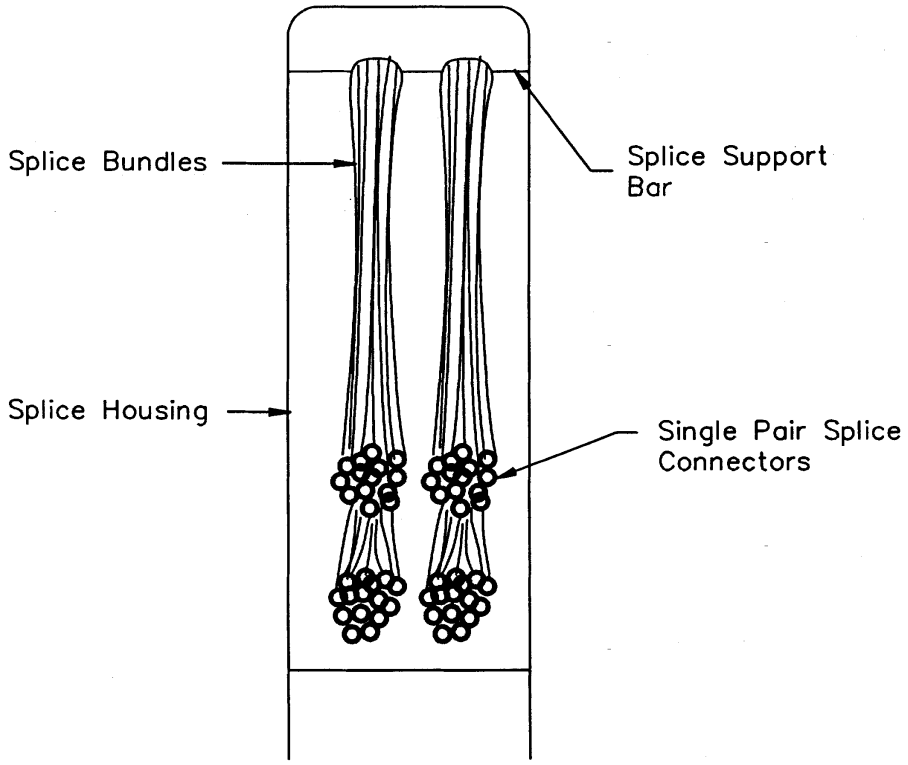

Note: Cable tags, bonding and grounding details, and plastic tie wraps have been omitted for clarity. See Figures 13 through 16 for cable tags, tie wraps, and bonding and grounding details.

FIGURE 4

LARGE SPLICE USING MULTIPLE PAIR CONNECTORS

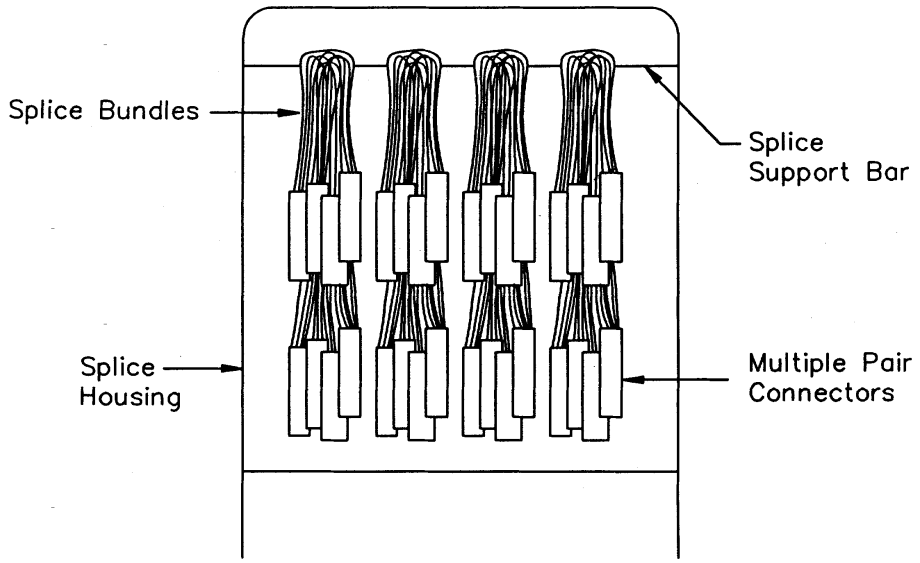

Note: Cable tags, bonding and grounding details, and plastic tie wraps have been omitted for clarity. See Figures 13 through 16 for cable tags, tie wraps, and bonding and grounding details.

FIGURE 5

LARGE SPLICE USING MULTIPLE PAIR CONNECTORS MOUNTED ON ORGANIZER RACKS

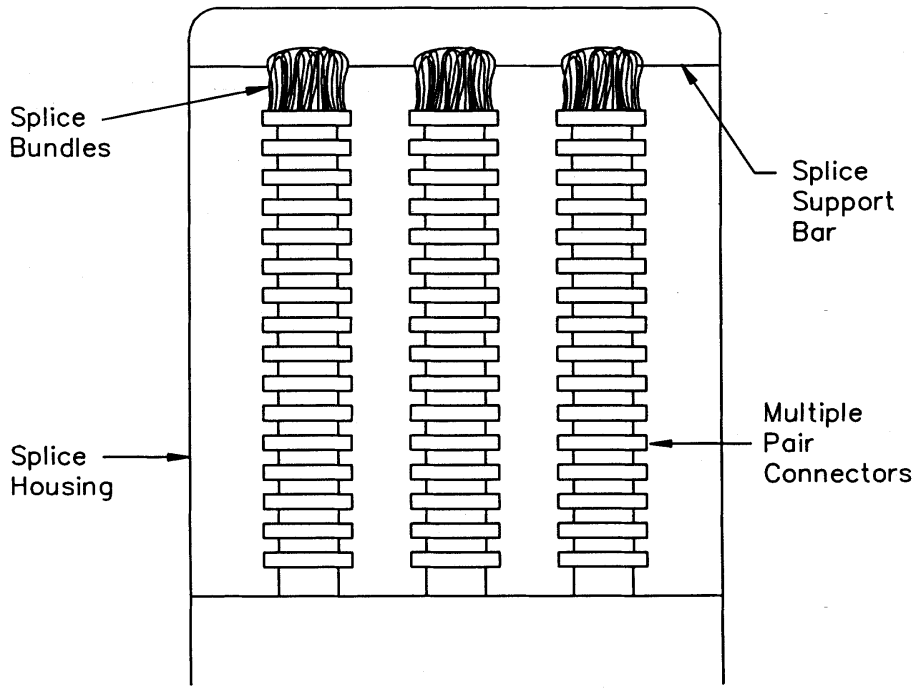

Note: Cable tags, bonding and grounding details, and plastic tie wraps have been omitted for clarity. See Figures 13 through 16 for cable tags, tie wraps, and bonding and and grounding details.

(9) *Underground splices (manholes).* Underground splice cases accommodate straight splices, branch splices, and load coils. Underground splices shall be filled.

(10) *Central office tip cable splices.* (i) Filled cable or filled splices are not recommended for use inside central offices, except in cable vault locations. Outside plant cable sheath and cable filling compound are susceptible to fire and will support combustion. Fire, smoke, and gases generated by these materials during burning are detrimental to telephone switching equipment.

(ii) Tip cables should be spliced in a cable vault. However, as a last resort, tip cables may be spliced inside a central office if flame retardant splice cases or a noncombustible central office splice housing is used to contain the splice.

(iii) Splices inside the central office shall be made as close as practical to

the point where the outside plant cables enter the building. Except in cable vault locations, outside plant cables within the central office shall be wrapped with fireproof tape or enclosed in noncombustible conduit.

(e) *Splicing considerations for fiber optic cables*—(1) *Connection characteristics.* Splicing efficiency between optical fibers is a function of light loss across the fiber junctions measured in decibels (dB). A loss of 0.2 dB in a splice corresponds to a light transmission efficiency of approximately 95.5 percent.

(2) *Fiber core alignment.* Fiber splicing techniques shall be conducted in such a manner that the cores of the fibers will be aligned as perfectly as possible to allow maximum light transmission from one fiber to the next. Without proper alignment, light will leave the fiber core and travel through the fiber cladding. Light outside the fiber core is not a usable light signal. Core misalignment is illustrated in Figure 6:

FIGURE 6
CORE MISALIGNMENT

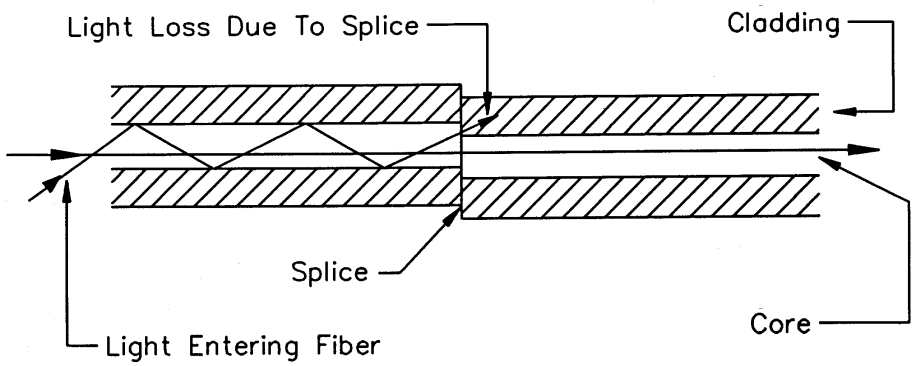

(3) *Splice loss.* (i) Splice loss can also be caused by fiber defects such as nonidentical core diameters, cores not in center of the fiber, and noncircular cores. Such defects are depicted in Figure 7:

FIGURE 7

SPLICE LOSS CAUSED BY FIBER MANUFACTURE

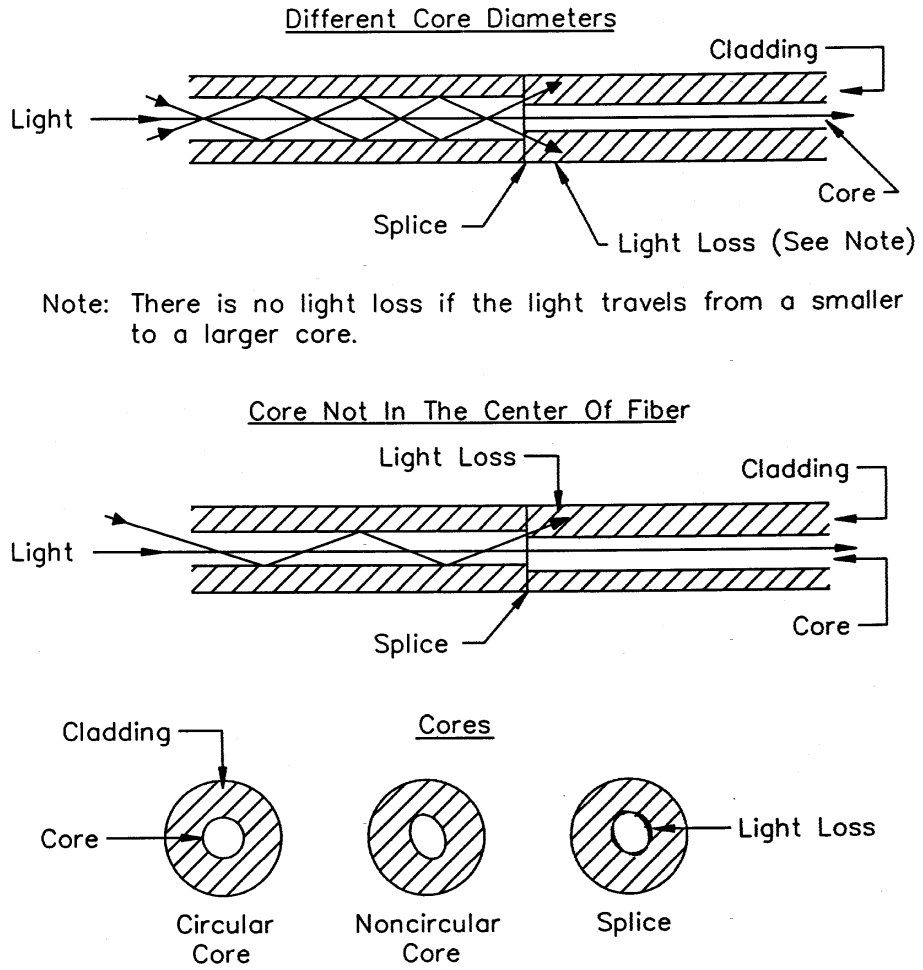

(ii) Undesirable splice losses are caused by poor splicing techniques including splicing irregularities such as improper cleaves and dirty splices. Typical cleave problems are illustrated in Figure 8:

FIGURE 8

IMPROPER CLEAVES VERSUS PROPER CLEAVE

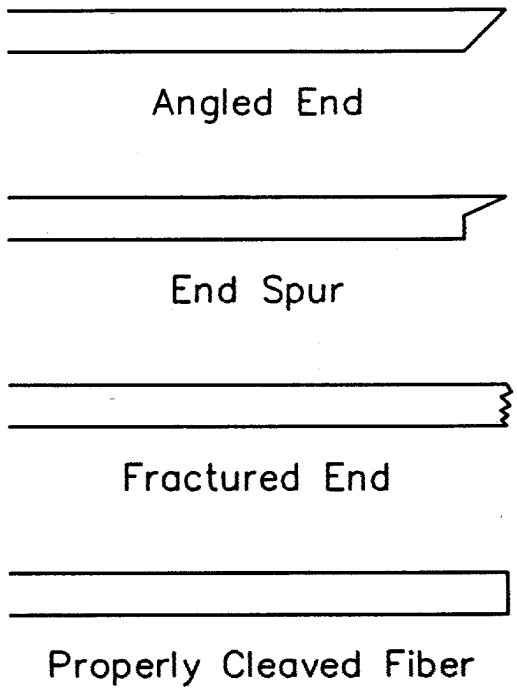

(4) *Handling precautions.* The following precautions shall be observed:

(i) Avoid damaging the cable during handling operations prior to splicing. Minor damage may change the transmission characteristics of the fibers to the extent that the cable section will have to be replaced;

(ii) The cable manufacturer's recommendations concerning pulling tension shall be observed. The maximum pulling tension for most fiber optic cable is 2669 newtons (600 pound-force);

(iii) The cable manufacturer's recommendations concerning bending radius shall be observed. Unless the cable manufacturer's recommendation is more stringent, the minimum bending radius for fiber optic cable shall be 20 times the cable diameter;

(iv) The cable manufacturer's recommendations concerning buffer tube bending radius shall be observed. Unless the cable manufacturer's recommendation is more stringent, the minimum bending radius for buffer tubes is usually between 38 millimeters (mm) (1.5 in.) and 76 mm (3.0 in.). The bending limitations on buffer tubes are intended to prevent kinking. Buffer tube kinking may cause excessive optical loss or fiber breakage; and

(v) Handle unprotected glass fibers carefully to avoid introducing flaws such as scratched or broken fibers.

(5) *Personnel safety.* The following safety precautions shall be observed:

(i) Safety glasses shall be worn when handling glass fibers;

(ii) Never view open-ended fibers with the naked eye or a magnifying device. Improper viewing of a fiber end that is transmitting light may cause irreparable eye damage; and

(iii) Dispose of bare scrap fibers by using the sticky side of a piece of tape to pick up and discard loose fiber ends. Fiber scraps easily penetrate the skin and are difficult to remove.

(6) *Equipment requirements.* (i) Fiber optic splices shall be made in areas where temperature, humidity, and cleanliness can be controlled. Both fusion and mechanical splicing techniques may require a splicing vehicle equipped with a work station that will allow environmental control.

(ii) Both fusion and mechanical splicing techniques are permitted on RUS financed projects. When using the mechanical splicing technique, only RUS accepted mechanical fiber optic splice connectors can be used.

(iii) Fusion splicing machines shall be kept in proper working condition. Regular maintenance in accordance with the machine manufacturer's recommendations shall be observed.

(iv) Mechanical splicing tools shall be in conformance with the tool manufacturer's recommendations.

(v) An optical time domain reflectometer (OTDR) shall be used for testing splices. The OTDR shall be stationed at the central office or launch point for testing individual splices as they are made and for end-to-end signature tests for the fiber optic link.

(vi) An optical power meter shall be used for end-to-end cable acceptance tests.

(vii) A prerequisite for the successful completion of a fiber optic splicing endeavor is the presence of a talk circuit between the splicing technician in the splicing vehicle and the operator of the OTDR in the central office. The splicing technician and the OTDR operator shall have access to communications with each other in order to inform each other as to:

(A) Which splices meet the loss objectives;

(B) The sequence in which buffer tubes and fibers are to be selected for subsequent splicing operations; and

(C) The timing required for the performance of OTDR testing to prevent making an OTDR test at the same time a splice is being fused.

(7) *Cable preparation.* (i) Engineering work prints shall prescribe the cable slack needed at splice points to reach the work station inside the splicing vehicle. Consideration should be given to the slack required for future maintenance activity as well as initial construction activities. The required slack may be different for each splice point, depending on the site logistics. However, the required slack is seldom less than 15 meters (50 feet). The amount of slack actually used shall be recorded for each splice point to assist future maintenance and restoration efforts.

(ii) The splice case manufacturer's recommendations concerning the amount of cable sheath to be removed shall be followed to facilitate splicing operations. The length of the sheath opening shall be identified with a wrap of plastic tape.

(iii) If the cable contains a rip cord, the cable jacket shall be ring cut approximately 15 cm (6 in.) from the end and the 15 cm (6 in.) of cable jacket shall be removed to expose the rip cord. The rip cord shall be used to slit the jacket to the tape mark.

(iv) If the cable does not contain a rip cord, the cable jacket shall be slit using a sheath splitter. No cuts shall be made into the cable core nor shall the buffer tubes be damaged.

(v) If the cable contains an armor sheath, the outer jacket shall be opened along the slit and the jacket shall be removed exposing the armor sheath. The armor shall be separated at the seam and pulled from the cable exposing the inner jacket. The armor shall be removed making allowances for a shield bond connector. The inner sheath shall be slit using a sheath splitter or rip cord. The cable core shall not be damaged nor shall there be any damage to the buffer tubes. The jacket shall be peeled back and cut at the end of the slit. The exposed buffer tubes shall not be cut, kinked, or bent.

(vi) After the cable sheath has been removed, the binder tape shall be removed from the cable. The cable shall not be crushed or deformed.

(vii) The buffer tubes shall be unstranded one at a time. The buffer tubes shall not be kinked.

(viii) If the cable is equipped with a strength member, the strength member shall be cut to the length recommended by the splice case manufacturer.

(ix) Each buffer tube shall be inspected for kinks, cuts, and flat spots. If damage is detected, an additional length of cable jacket shall be removed and all of the buffer tubes shall be cut off at the point of damage.

(x) The cable preparation sequence shall be repeated for the other cable end.

(8) *Shield bonding and grounding.* For personnel safety, the shields and metallic strength members of the cables to be spliced shall be bonded together and grounded before splicing activities are started. (See paragraphs (g)(4), and (g)(5)(i) through (g)(5)(iii) of this section for final bonding and grounding provisions).

(9) *Fiber optic color code.* The standard fiber optic color code for buffer tubes and individual fibers shall be as shown in Table 7:

TABLE 7—FIBER AND BUFFER TUBE IDENTIFICATION

Buffer tube and fiber No.	Color
1	Blue.
2	Orange.
3	Green.
4	Brown.
5	Slate.
6	White.
7	Red.
8	Black.
9	Yellow.
10	Violet.
11	Rose.
12	Aqua.
13	Blue/Black Tracer.
14	Orange/Black Tracer.
15	Green/Black Tracer.
16	Brown/Black Tracer.
17	Slate/Black Tracer.
18	White/Black Tracer.
19	Red/Black Tracer.
20	Black/Yellow Tracer.
21	Yellow/Black Tracer.
22	Violet/Black Tracer.
23	Rose/Black Tracer.
24	Aqua/Black Tracer.

(10) *Buffer tube removal.* (i) The splice case manufacturer's recommendation shall be followed concerning the total length of buffer tube to be removed. Identify the length to be removed with plastic tape.

(ii) Experiment with a scrap buffer tube to determine the cutting tool adjustment required to ring cut a buffer tube without damaging the fibers.

(iii) Buffer tubes shall be removed by carefully ring cutting and removing approximately 15 to 46 cm (6 to 18 in.) of buffer tube at a time. The process shall be repeated until the required length of buffer tube has been removed, including the tape identification marker.

(11) *Coated fiber cleaning.* (i) Each coated fiber shall be cleaned. The cable manufacturer's recommendations shall be followed concerning the solvent required to clean the coated fibers. Reagent grade isopropyl alcohol is a commonly used cleaning solvent.

(ii) A tissue or cotton ball shall be soaked in the recommended cleaning solvent and the coated fibers shall be carefully wiped one at a time using a clean tissue or cotton ball for each coated fiber. Caution shall be exercised to avoid removing the coloring agent from the fiber coating.

(12) *Fiber coating removal.* (i) Fiber coatings shall be removed. In accordance with the splicing method used, the splice case manufacturer's recommendation shall be followed concerning the length of fiber coating to be removed.

(ii) The recommended length of fiber coating shall be removed only on the two fibers to be spliced. Fiber coating removal shall be performed on a one-fiber-at-a-time basis as each splice is prepared.

(13) *Bare fiber cleaning.* After the fiber coating has been removed, the bare fibers shall be cleaned prior to splicing. Each fiber shall be wiped with a clean tissue or cotton ball soaked with the cleaning solvent recommended by the cable manufacturer. The bare fiber shall be wiped one time to minimize fiber damage. Aggressive wiping of bare fiber shall be avoided as it lowers the fiber tensile strength.

(14) *Fiber cleaving.* Cleaving tools shall be clean and have sharp cutting edges to minimize fiber scratches and improper cleave angles. Cleaving tools that are recommended by the manufacturer of the splicing system shall be used.

(15) *Cleaved fiber handling.* The cleaved and cleaned fiber shall not be allowed to touch other objects and

shall be inserted into the splicing device.

(16) *Completion of the splice.* (i) In accordance with the method of splicing selected by the borrower, the splice shall be completed by either fusing the splice or by applying the mechanical connector.

(ii) Each spliced fiber shall be routed through the organizer tray one at a time as splices are completed. The fibers shall be organized one at a time to prevent tangled spliced fibers. The splice case manufacturer's recommendation shall be followed concerning the splice tray selection.

(17) *Fiber optic testing.* Fiber optic testing shall be performed in accordance with RUS Bulletin 345–63, ''RUS Standard for Acceptance Tests and Measurements of Telephone Plant,'' PC–4, (Incorporated by reference at § 1755.97).

(18) *Cable acceptance.* Installed cable shall be tested and pass the inventory and acceptance testing specified in the Telephone System Construction Contract (Labor and Materials), RUS Form 515. The tests and inspections shall be witnessed by the borrower's resident project representative.

(f) *Splice arrangements for fiber optic cables*—(1) *Aerial splices.* Cable slack at aerial splices shall be stored either on the messenger strand, on the pole, or inside a pedestal at the base of the pole. A typical arrangement for the storage of slack cable at aerial splices is shown in Figure 9:

FIGURE 9
AERIAL SPLICE STORED INSIDE PEDESTAL

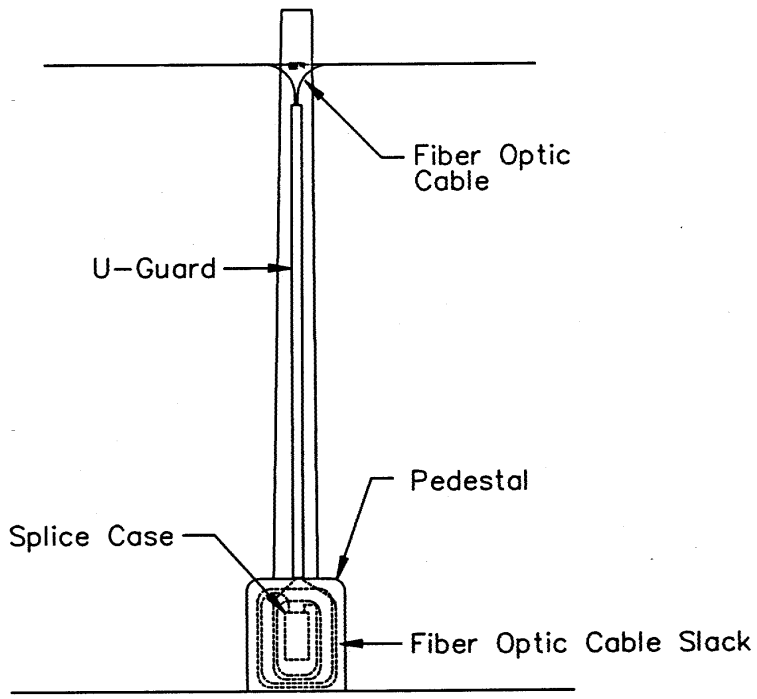

Note: See Figure 11 for details concerning storage of splice case inside pedestal.

(2) *Buried splices.* Buried splices shall be installed in handholes to accommodate the splice case and the required splicing slack. An alternative to the handhole is a pedestal specifically designed for fiber optic splice cases. Typical arrangements for buried cable splices are shown in Figures 10 and 11:

FIGURE 10

BURIED SPLICE STORED INSIDE HANDHOLE

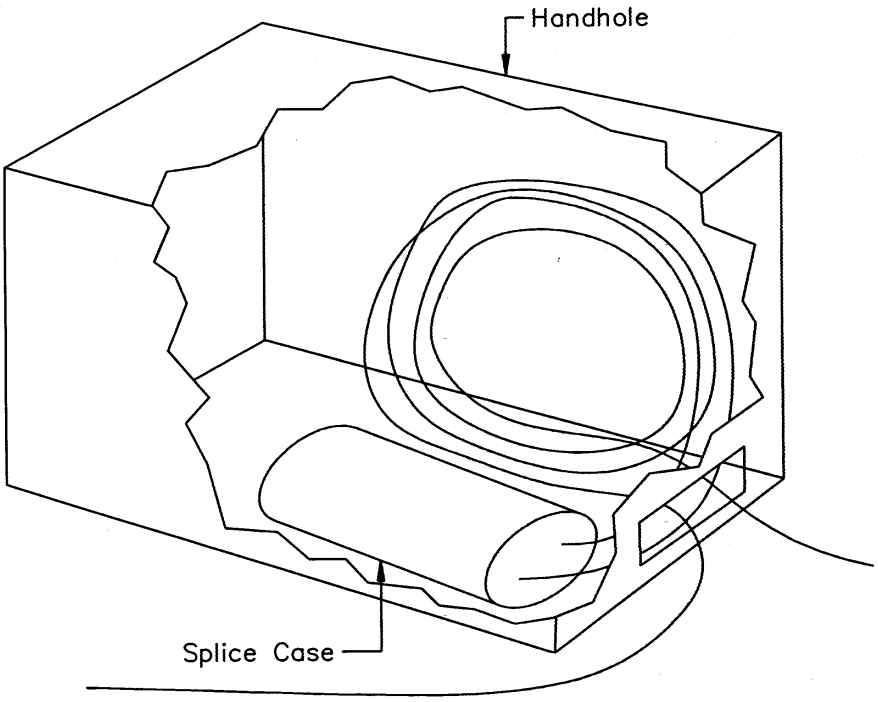

Note: Ground wires omitted for clarity. See Figure 19 for bonding and grounding details.

FIGURE 11
BURIED SPLICE STORED INSIDE PEDESTAL HOUSING

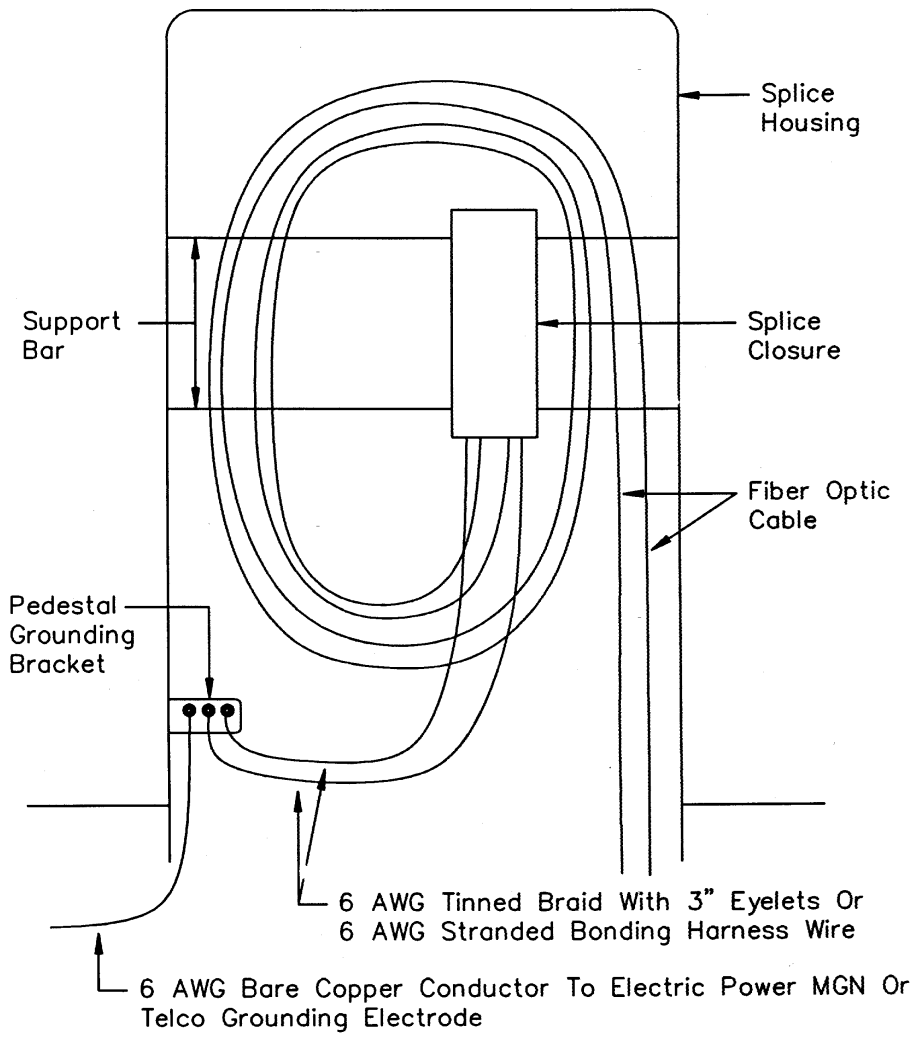

(3) *Underground manhole splices.* Underground splices shall be stored in manholes on cable hooks and racks fastened to the manhole wall. The cable slack shall be stored on cable hooks and racks as shown in Figure 12:

FIGURE 12
MANHOLE SPLICE STORAGE

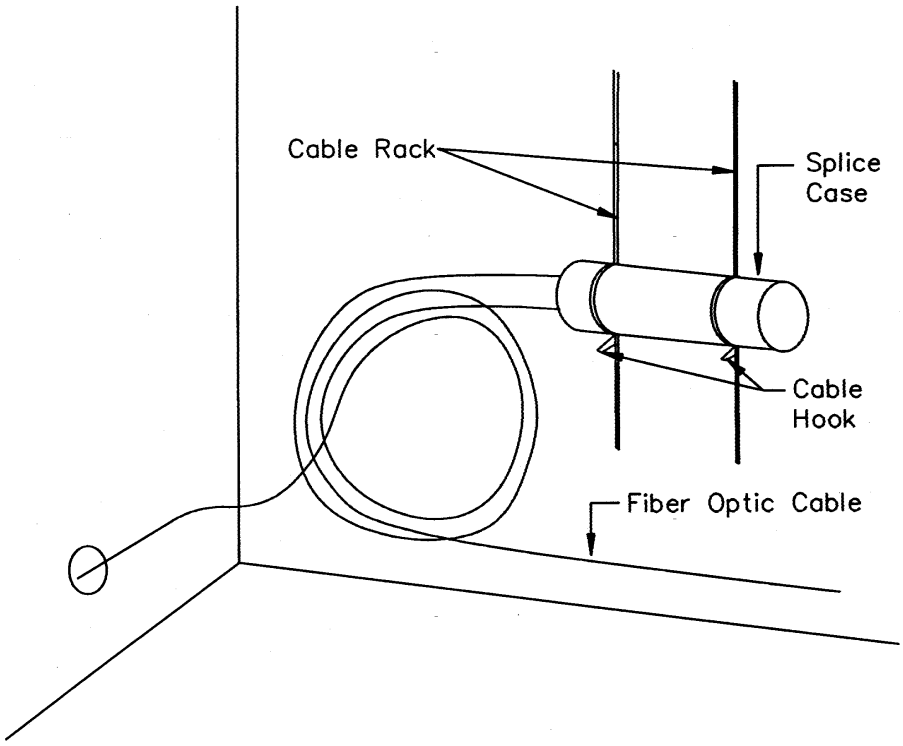

(4) *Central office cable entrance.* (i) Filled cable or filled splices are not recommended for use inside central offices except in cable vault locations. Outside plant cable sheath and cable filling compound are susceptible to fire and will support combustion. Fire, smoke, and gases generated by these materials during burning are detrimental to telephone switching equipment.

(ii) As a first choice, the outside plant fiber optic cable shall be spliced to an all-dielectric fire retardant cable in a cable vault with the all-dielectric cable extending into the central office and terminating inside a fiber patch panel.

(iii) As a second choice, the outside plant cable may be spliced inside the central office if a flame retardant fiber optic splice case or a noncombustible central office splice housing equipped with organizer trays is used to contain the splice.

(iv) In cases referenced in paragraphs (f)(4)(ii) and (f)(4)(iii) of this section, as a minimum the fire retardant all-dielectric cable used to provide the connection between the cable entrance splice and the fiber patch panel shall be listed as Communication Riser Cable (Type CMR) in accordance with Sections 800–50 and 800–51(b) of the 1993 National Electrical Code.

(v) Splices inside the central office shall be made as close as practicable to

the point where the outside plant cables enter the building. Except in cable vault locations, outside plant cables within the central office shall be wrapped with fireproof tape or enclosed in noncombustible conduit.

(g) *Bonding and grounding fiber optic cable, copper cable, and copper service wire*—(1) *Bonding*. Bonding is electrically connecting two or more metallic items of telephone hardware to maintain a common electrical potential. Bonding may involve connections to another utility.

(2) *Copper cable shield bond connections*. (i) Cable shields shall be bonded at each splice location. Only RUS accepted cable shield bond connectors shall be used to provide bonding and grounding connections to metallic cable shields. The shield bond connector manufacturer's instructions shall be followed concerning installation and use.

(ii)(A) Shield bonding conductors shall be either stranded or braided tinned copper wire equivalent to a minimum No. 6 American Wire Gauge (AWG) and shall be RUS accepted. The conductor connections shall be tinned or of a compatible bimetallic design to avoid corrosion problems associated with dissimilar metals. The number of shield bond connectors required per pair size and gauge shall be as shown in Table 8:

TABLE 8—SHIELD BOND CONNECTORS PER PAIR SIZE AND GAUGE

19 AWG	Pair size and gauge			No. of shield bond connectors
	22 AWG	24 AWG	26 AWG	
0–25	0–100	0–150	0–200	1
50–100	150–300	200–400	300–600	2
150–200	400–600	600–900	900–1500	3
300–600	900–1200	1200–2100	1800–3600	4

(B) It is permissible to strap across the shield bond connectors of several cables with a single length of braided wire. However, both ends of the braid shall be terminated on the pedestal ground bracket to provide a bonding loop. Shield bond connection methods for individual cables are shown in Figures 13 through 15, and the bonding of several cables inside a pedestal using the bonding loop is shown in Figure 16:

FIGURE 13
BONDING AND GROUNDING CABLES INSIDE PEDESTALS

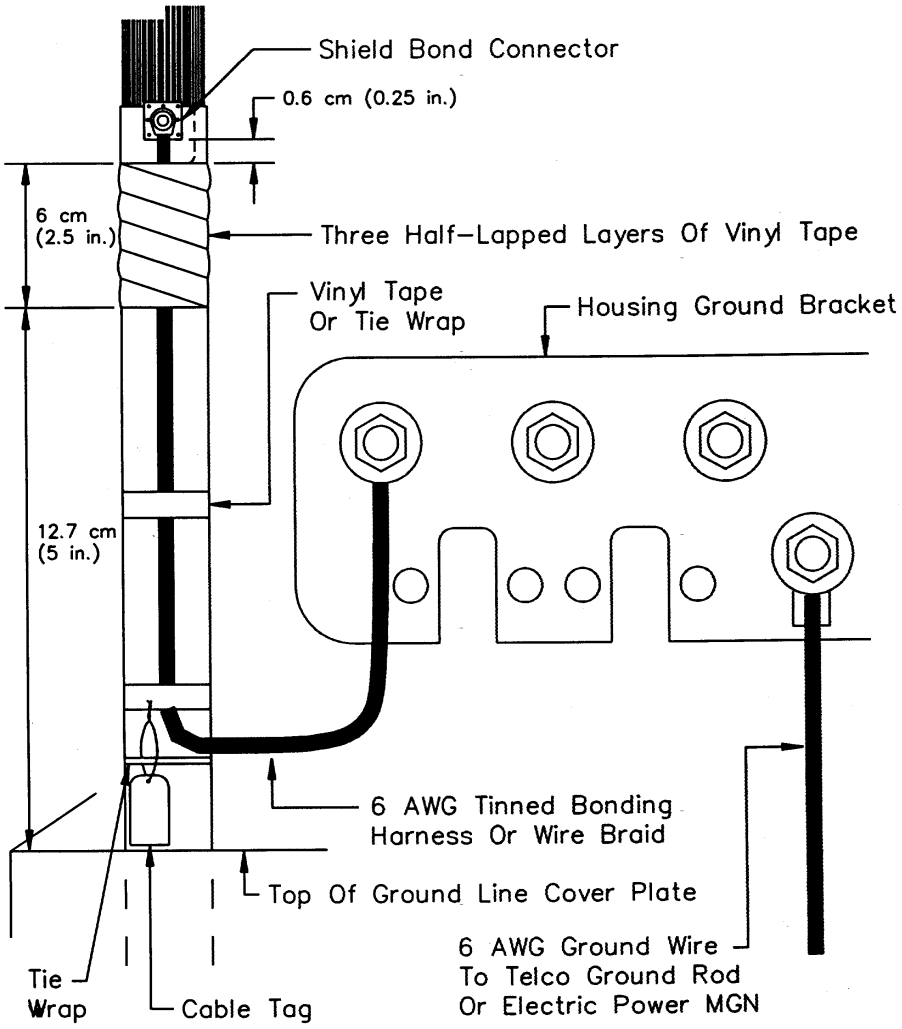

FIGURE 14

BONDING AND GROUNDING OF LARGE CABLES INSIDE PEDESTALS USING MULTIPLE SHIELD BOND CONNECTORS AND HARNESS WIRES

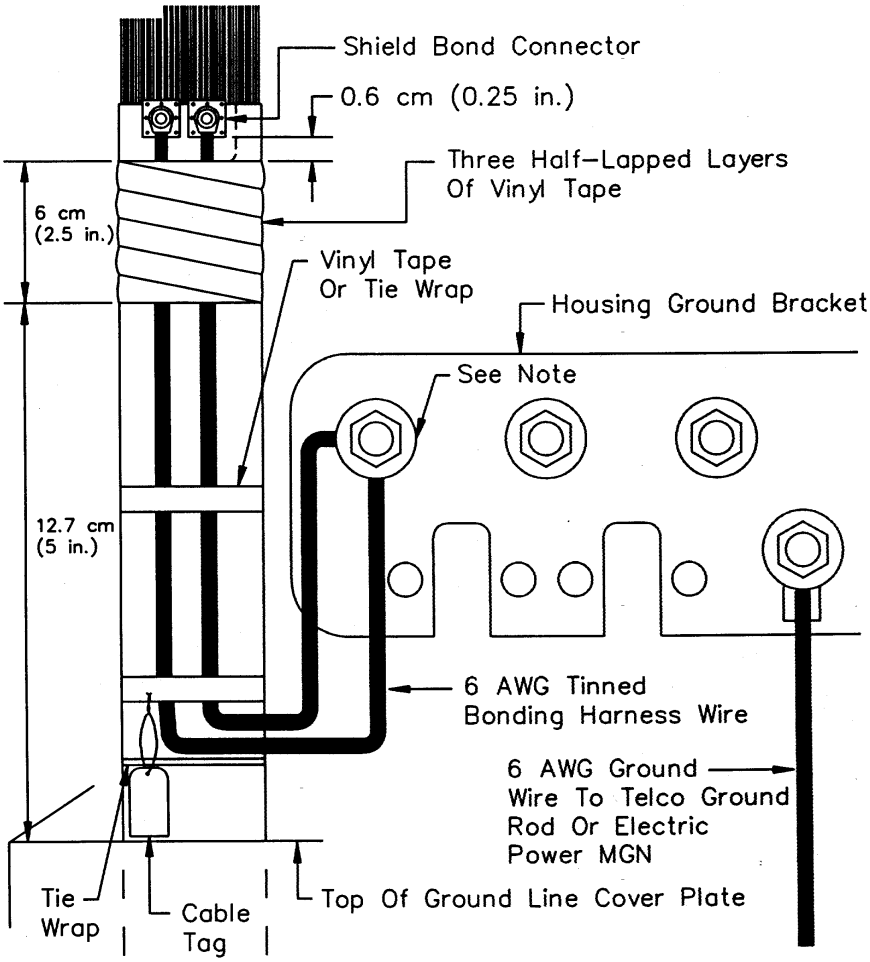

Note: The maximum number of harness wires that can be installed on each stud of the ground bracket shall be in accordance with the manufacturer's instructions.

FIGURE 15
ALTERNATIVE METHOD OF BONDING AND GROUNDING LARGE CABLES IN PEDESTALS USING MULTIPLE SHIELD BOND CONNECTORS AND 6 AWG WIRE BRAID

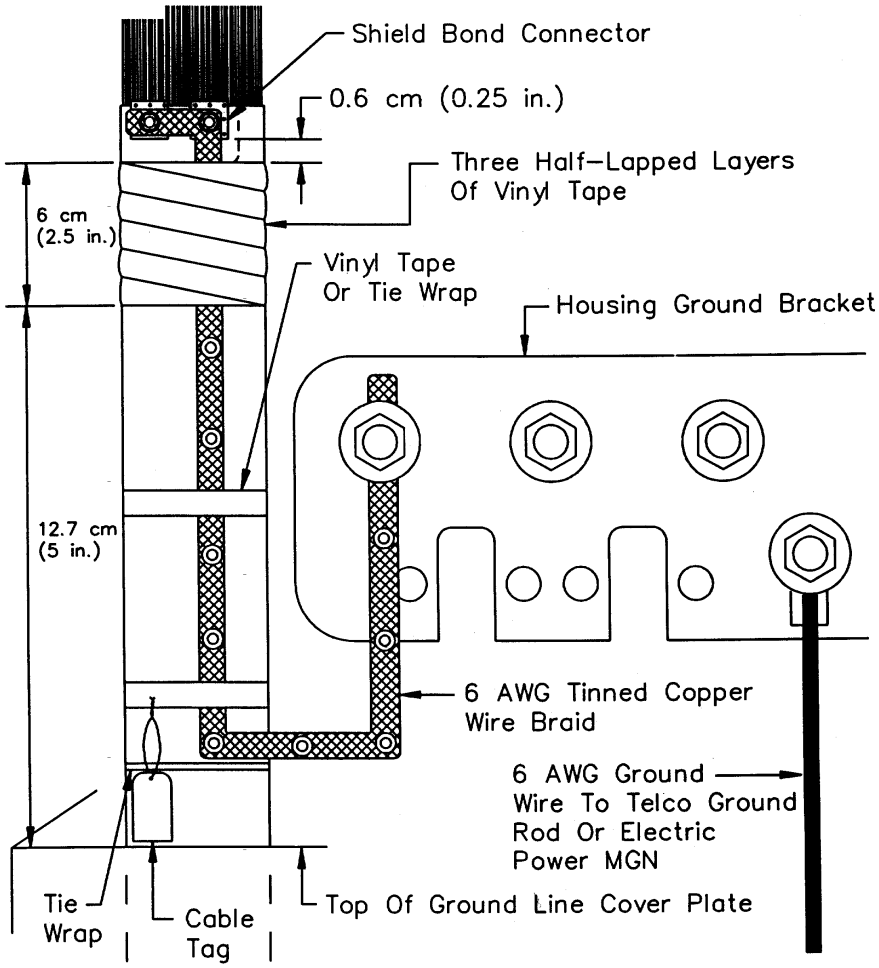

FIGURE 16
ALTERNATIVE METHOD OF BONDING AND GROUNDING SEVERAL CABLES IN PEDESTALS USING SHIELD BOND CONNECTORS AND 6 AWG WIRE BRAID LOOP

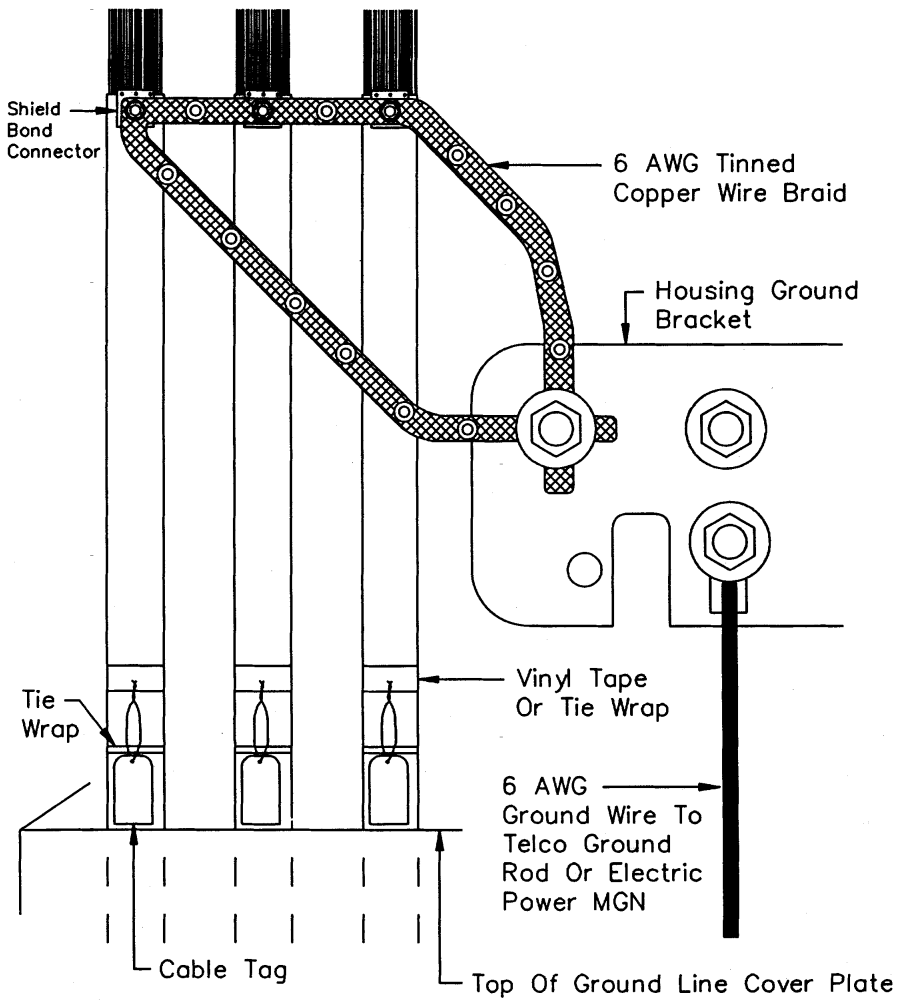

(3) *Buried service wire shield bond connections.* Buried service wire shields shall be connected to the pedestal bonding and grounding system. Typical buried service wire installations are shown in Figures 17 and 18. In addition to the methods referenced in Figures 17 and 18, the shields of buried service wires may also be connected to the pedestal bonding and grounding system using buried service wire bonding harnesses listed on Page 3.3.1, Item "gs-b," of RUS Bulletin 1755I–100. RUS Bulletin 1755I–100 may be purchased from the

Superintendent of Documents, U.S. Government Printing Office, Washington, DC 20402. When those harnesses are used they shall be installed in accordance with the manufacturer's instructions. Figures 17 and 18 are as follows:

FIGURE 17
GROUNDING SERVICE WIRE SHIELDS USING SERVICE WIRE CLAMP

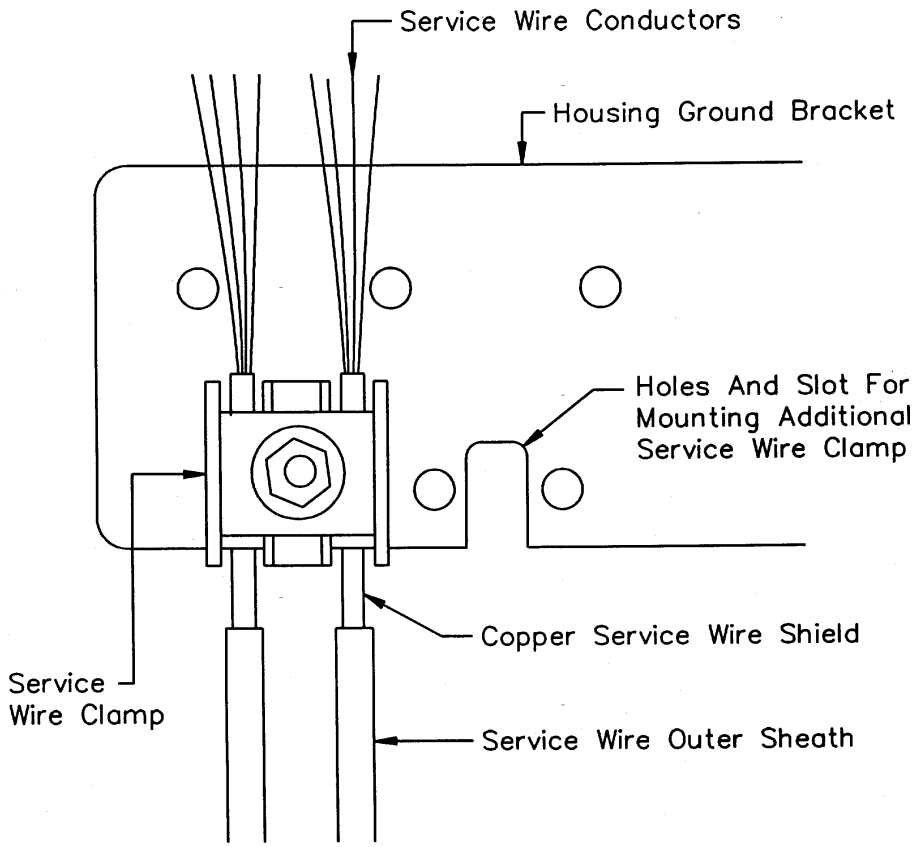

Note: Provide a loop in service drops to allow for movement of the drops without damage to the grounding connection.

FIGURE 18

ALTERNATIVE METHOD OF GROUNDING BURIED SERVICE WIRES INSIDE PEDESTALS

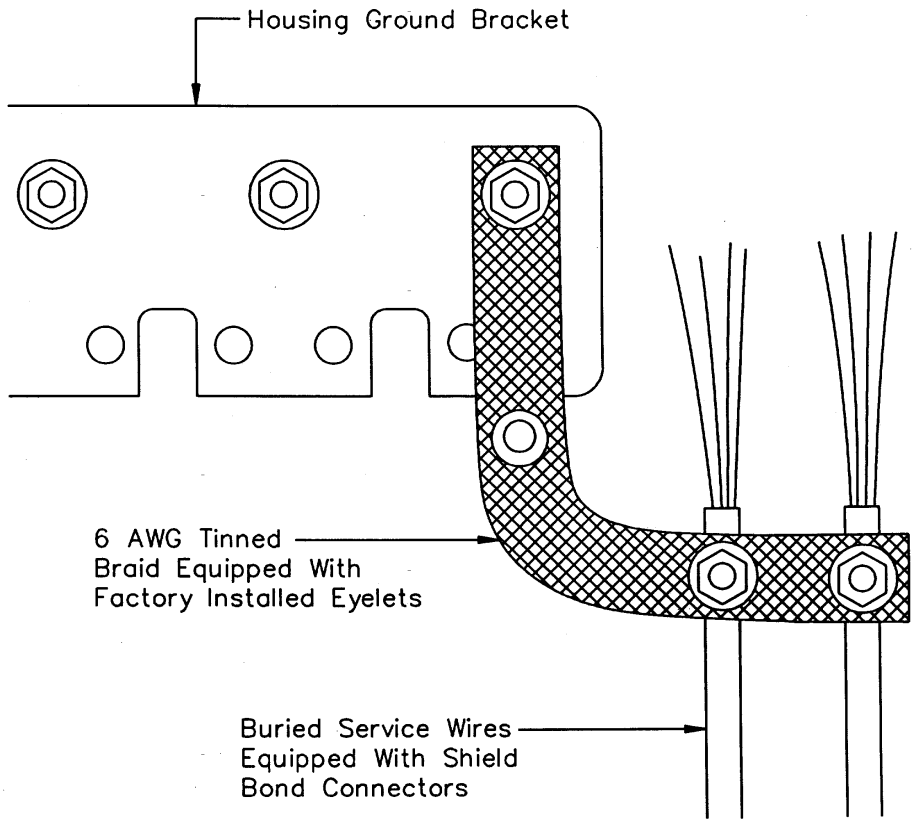

(4) *Fiber optic cable bond connections.* (i) The cable shield and metallic strength members shall be bonded at each splice location. Only RUS accepted fiber optic cable shield bond connectors shall be used to provide bonding connections to the metallic cable shields. The shield bond connector manufacturer's instructions shall be followed concerning installation and use.

(ii) Shield bonding conductors shall be either stranded or braided tinned copper wire equivalent to a minimum No. 6 American Wire Gauge (AWG) and shall be RUS accepted. The conductor connections shall be tinned or of a compatible bimetallic design to avoid corrosion problems associated with dissimilar metals.

(5) *Grounding.* (i) Grounding is electrically connecting metallic telephone hardware to a National Electrical Safety Code (NESC) acceptable grounding electrode. Acceptable grounding electrodes are defined in the Rule 99A of the NESC.

(ii) The conductor used for grounding metallic telephone hardware shall be a minimum No. 6 AWG solid, bare, copper conductor.

(iii) For copper and fiber optic cable plant, all cable shields, all metallic strength members, and all metallic hardware shall be:

(A) Grounded at each splice location to a driven grounding electrode (ground rod) of:

(*1*) At least 1.5 meters (5 feet) in length where the local frost level is normally less than 0.30 meters (1 foot) deep; or

(*2*) At least 2.44 meters (8 feet) in length where the local frost level is normally 0.30 meters (1 foot) or deeper; and

(B) Bonded to a multi-grounded power system neutral when the splice is within 1.8 meters (6 feet) of access to the grounding system of the multi-grounded neutral system. Bonding to the multi-grounded neutral of a parallel power line may help to minimize telephone interference on long exposures with copper cable plant. Consideration, thus, should be given to completing such bonds, at least four (4) times each mile, when splices are greater than 1.8 meters (6 feet) but less than 4.6 meters (15 feet) from access to the multi-grounded neutral.

(6) *Bonding and grounding splice cases.* (i) Splice cases are equipped with bonding and grounding devices to ensure that cable shields and metallic strength members maintain electrical continuity during and after cable splicing operations. The splice case manufacturer's recommendations shall be followed concerning the bonding and grounding procedures. Conductors used for bonding shall be either stranded or braided tinned copper wire equivalent to 6 AWG. Conductors used for grounding shall be a solid, bare, copper wire equivalent to minimum No. 6 AWG.

(ii) Buried splice cases installed in either handholes or pedestals shall be grounded such that the cable shield grounds are attached to a common ground connection that will allow the lifting of a ground on the cable shield in either direction to permit efficient cable locating procedures. As a first choice, buried grounding conductor(s) shall be bare. However, if two or more grounding conductors are buried in the s they shall be insulated to avoid shorts when a locating tone is applied.

(iii) A typical bonding and grounding method for fiber optic splices is shown in Figure 19:

FIGURE 19

BONDING AND GROUNDING BURIED FIBER OPTIC SPLICES

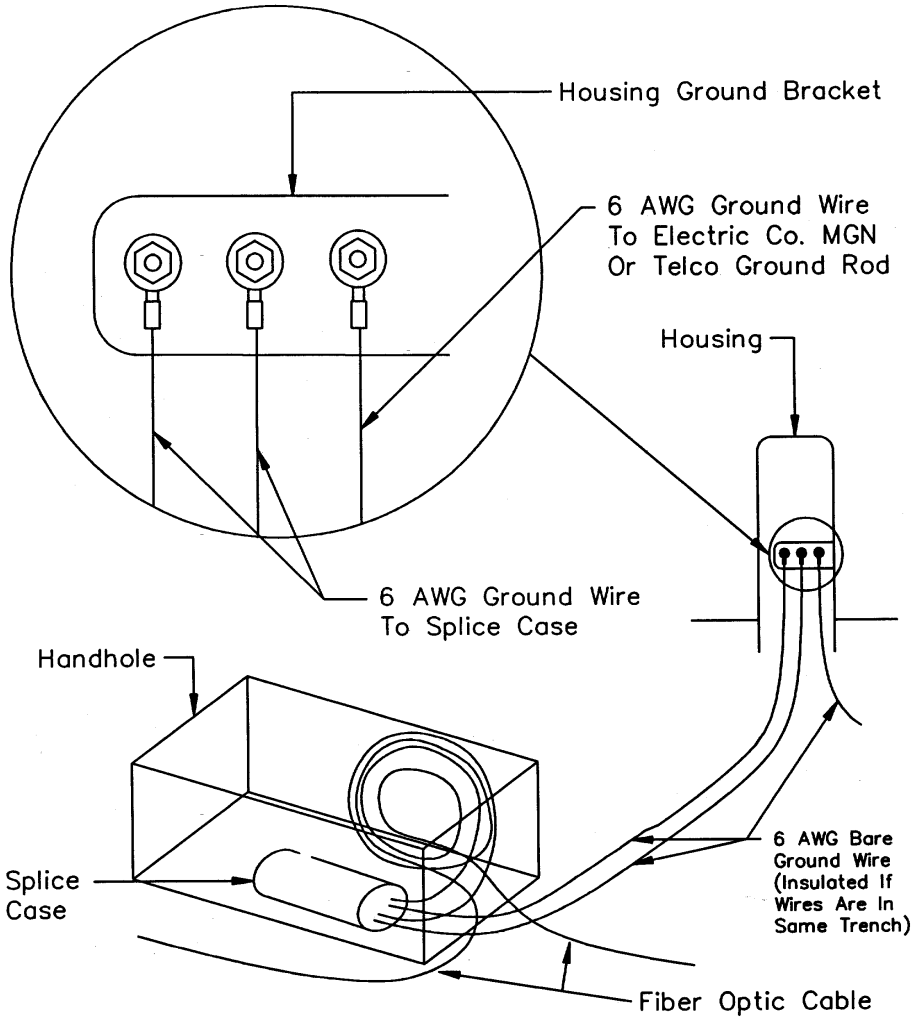

(7) *Bonding and grounding central office cable entrances.* The RUS Telecommunications Engineering and Construction Manual (TE&CM) Section 810 provides bonding and grounding guidance for central office cable entrances. Splicing operations shall not be attempted before all metallic cable shield and strength members are bonded and grounded.

[60 FR 5097, Jan. 26, 1995; 60 FR 9079, Feb. 16, 1995]

§§ 1755.201–1755.369 [Reserved]

§ 1755.370 RUS specification for seven wire galvanized steel strand.

(a) RUS incorporates by reference ASTM A475–78, Standard Specification for Zinc-Coated Steel Wire Strand, issued May 1978. All seven wire galvanized steel strand purchased after April 1, 1990, for use on telecommunications systems financed by RUS loan funds must conform to this standard. This incorporation by reference was approved by the Director of the Federal Register in accordance with 5 U.S.C. 552(a) and 1 CFR part 51 on January 19, 1990). Copies of ASTM A475–78 are available for inspection during normal business hours at the National Archives and Records Administration (NARA) and the Rural Utilities Service, Administrative Services Division, room 0175–S, U.S. Department of Agriculture, Washington, DC 20250, telephone 202–382–9551. For information on the availability of this material at NARA, call 202–741–6030, or go to: *http://www.archives.gov/federal_register/code_of_federal_regulations/ibr_locations.html*. Copies are available from the American Society for Testing and Materials, 1916 Race Street, Philadelphia, PA 19103, telephone 215–299–5400.

(b) In addition to the requirements of ASTM 475–78, all coils and reels having Class B or C coatings shall be marked with a 3-inch wide and 6-inch long deep-colored stripe, green or orange, respectively, to identify the class of galvanized coating of the strand. This marking shall be applied to the exposed convolutions of the strand in the eye of the coils and located near the midpoint on the outside layer of strand on the reels. The marking shall not cover any welded joint markings.

[55 FR 1792, Jan. 19, 1990; 55 FR 3685, Feb. 2, 1990. Redesignated at 55 FR 39397, Sept. 27, 1990; 69 FR 18803, Apr. 9, 2004]

§§ 1755.371–1755.389 [Reserved]

§ 1755.390 RUS specification for filled telephone cables.

(a) *Scope*. (1) This section covers the requirements for filled telephone cables intended for direct burial installation either by trenching or by direct plowing, for underground application by placement in a duct, or for aerial installations by attachment to a support strand.

(i) The conductors are solid copper, individually insulated with an extruded solid insulating compound.

(ii) The insulated conductors are twisted into pairs which are then stranded or oscillated to form a cylindrical core.

(iii) For high frequency applications, the cable core may be separated into compartments with screening shields.

(iv) A moisture resistant filling compound is applied to the stranded conductors completely covering the insulated conductors and filling the interstices between pairs and units.

(v) The cable structure is completed by the application of suitable core wrapping material, a flooding compound, a shield or a shield/armor, and an overall plastic jacket.

(2) The number of pairs and gauge size of conductors which are used within the RUS program are provided in the following table:

AWG	19	22	24	26
Pairs	6	6	6	
	12	12	12	
	18	18	18	
	25	25	25	25
		50	50	50
		75	75	75
		100	100	100
		150	150	150
		200	200	200
		300	300	300
		400	400	400
			600	600
				900

NOTE: Cables larger in pair sizes than those shown in this table must meet all requirements of this section.

(3) Screened cable, when specified, must meet all requirements of this section. The pair sizes of screened cables used within the RUS program are referenced in paragraph (e)(2)(i) of this section.

(4) All cables sold to RUS borrowers for projects involving RUS loan funds under this section must be accepted by RUS Technical Standards Committee ''A'' (Telephone). For cables manufactured to the specification of this section, all design changes to an accepted design must be submitted for acceptance. RUS will be the sole authority on what constitutes a design change.

(5) Materials, manufacturing techniques, or cable designs not specifically addressed by this section may be allowed if accepted by RUS. Justification for acceptance of modified materials, manufacturing techniques, or cable designs must be provided to substantiate product utility and long-term stability and endurance.

(6) The American National Standard Institute/Insulated Cable Engineers Association, Inc. (ANSI/ICEA) S-84–608–1988 Standard For Telecommunications Cable, Filled, Polyolefin Insulated, Copper Conductor Technical Requirements referenced throughout this section is incorporated by reference by RUS. This incorporation by reference was approved by the Director of the Federal Register in accordance with 5 U.S.C. 552(a) and 1 CFR part 51. Copies of ANSI/ICEA S-84–608–1988 are available for inspection during normal business hours at RUS, room 2845, U.S. Department of Agriculture, Washington, DC 20250, or at the National Archives and Records Administration (NARA). For information on the availability of this material at NARA, call 202–741–6030, or go to: *http://www.archives.gov/federal_register/code_of_federal_regulations/ibr_locations.html*. Copies are available from ICEA, P. O. Box 440, South Yarmouth, MA 02664, telephone number (508) 394–4424.

(7) American Society for Testing and Materials specifications (ASTM) A 505-87, Standard Specification for Steel, Sheet and Strip, Alloy, Hot-Rolled and Cold-Rolled, General Requirements For; ASTM B 193-87, Standard Test Method for Resistivity of Electrical Conductor Materials; ASTM B 224-80, Standard Classification of Coppers; ASTM B 694-86, Standard Specification for Copper, Copper Alloy, and Copper-Clad Stainless Steel Sheet and Strip for Electrical Cable Shielding; ASTM D 4565-90a, Standard Test Methods for Physical and Environmental Performance Properties of Insulations and Jackets for Telecommunications Wire and Cable; and ASTM D 4566-90, Standard Test Methods for Electrical Performance Properties of Insulations and Jackets for Telecommunications Wire and Cable referenced in this section are incorporated by reference by RUS. These incorporations by references were approved by the Director of the Federal Register in accordance with 5 U.S.C. 552(a) and 1 CFR part 51. Copies of the ASTM standards are available for inspection during normal business hours at RUS, room 2845, U.S. Department of Agriculture, Washington, DC 20250, or at the National Archives and Records Administration (NARA). For information on the availability of this material at NARA, call 202–741–6030, or go to: *http://www.archives.gov/federal_register/code_of_federal_regulations/ibr_locations.html*. Copies are available from ASTM, 1916 Race Street, Philadelphia, PA 19103–1187, telephone number (215) 299–5585.

(b) *Conductors and conductor insulation*. (1) The gauge sizes of the copper conductors covered by this specification must be 19, 22, 24, and 26 American Wire Gauge (AWG).

(2) Each conductor must comply with the requirements specified in ANSI/ICEA S-84–608–1988, paragraph 2.1.

(3) Factory joints made in conductors during the manufacturing process must comply with the requirements specified in ANSI/ICEA S-84–608–1988, paragraph 2.2.

(4) The raw materials used for conductor insulation must comply with the requirements specified in ANSI/ICEA S-84–608–1988, paragraphs 3.1 through 3.1.3.

(5) The finished conductor insulation must comply with the requirements specified in ANSI/ICEA S-84–608–1988, paragraphs 3.2.1 and 3.3.

(6) Insulated conductors must not have an overall diameter greater than 2 millimeters (mm) (0.081 inch (in.)).

(7) A permissible overall performance level of faults in conductor insulation must average not greater than one fault per 12,000 conductor meters (40,000 conductor feet) for each gauge of conductor.

(i) All insulated conductors must be continuously tested for insulation faults during the twinning operation with a method of testing acceptable to RUS. The length count and number of faults must be recorded. The information must be retained for a period of 6 months and be available for review by RUS when requested.

(ii) The voltages for determining compliance with the requirements of this section are as follows:

AWG	Direct Current Voltages (kilovolts)
19	8.0
22	6.0
24	5.0
26	4.0

(8) Repairs to the conductor insulation during manufacture are permissible. The method of repair must be accepted by RUS prior to its use. The repaired insulation must be capable of meeting the relevant electrical requirements of this section.

(9) All repaired sections of insulation must be retested in the same manner as originally tested for compliance with paragraph (b)(7) of this section.

(10) The colored insulating material removed from or tested on the conductor, from a finished cable, must meet the performance requirements specified in ANSI/ICEA S-84–608–1988, paragraphs 3.4.1, 3.4.2, 3.4.4, 3.4.5, and 3.4.6.

(c) *Identification of pairs and twisting of pairs.* (1) The insulation must be colored to identify:

(i) The tip and ring conductor of each pair; and

(ii) Each pair in the completed cable.

(2) The colors to be used in the pairs in the 25 pair group, together with the pair numbers must be in accordance with the table specified in ANSI/ICEA S-84–608–1988, paragraph 3.5.

(3) Positive identification of the tip and ring conductors of each pair by marking each conductor of a pair with the color of its mate is permissible. The method of marking must be accepted by RUS prior to its use.

(4) Other methods of providing positive identification of the tip and ring conductors of each pair may be employed if accepted by RUS prior to its use.

(5) The insulated conductors must be twisted into pairs.

(6) In order to provide sufficiently high crosstalk isolation, the pair twists must be designed to enable the cable to meet the capacitance unbalance and crosstalk loss requirements of paragraphs (k)(5), (k)(6), and (k)(8) of this section.

(7) The average length of pair twists in any pair in the finished cable, when measured on any 3 meter (10 foot) length, must not exceed the requirement specified in ANSI/ICEA S-84–608–1988, paragraph 3.5.

(d) *Forming of the cable core.* (1) Twisted pairs must be assembled in such a way as to form a substantially cylindrical group.

(2) When desired for lay-up reasons, the basic group may be divided into two or more subgroups called units.

(3) Each group, or unit in a particular group, must be enclosed in bindings of the colors indicated for its particular pair count. The pair count, indicated by the colors of insulation, must be consecutive as indicated in paragraph (d)(6) of this section through units in a group.

(4) The filling compound must be applied to the cable core in such a way as to provide as near a completely filled core as is commercially practical.

(5) Threads and tapes used as binders must comply with the requirements specified in ANSI/ICEA S-84–608–1988, paragraphs 4.2 and 4.2.1.

(6) The colors of the bindings and their significance with respect to pair count must be as follows:

Group No.	Color of Bindings	Group Pair Count
1	White-Blue	1–25
2	White-Orange	26–50
3	White-Green	51–75
4	White-Brown	76–100
5	White-Slate	101–125
6	Red-Blue	126–150
7	Red-Orange	151–175
8	Red-Green	176–200
9	Red-Brown	201–225
10	Red-Slate	226–250
11	Black-Blue	251–275
12	Black-Orange	276–300
13	Black-Green	301–325
14	Black-Brown	326–350
15	Black-Slate	351–375
16	Yellow-Blue	376–400
17	Yellow-Orange	401–425
18	Yellow-Green	426–450
19	Yellow-Brown	451–475
20	Yellow-Slate	476–500
21	Violet-Blue	501–525
22	Violet-Orange	526–550
23	Violet-Green	551–575
24	Violet-Brown	576–600

(7) The use of the white unit binder in cables of 100 pairs or less is optional.

(8) When desired for manufacturing reasons, two or more 25 pair groups

may be bound together with nonhygroscopic and nonwicking threads or tapes into a super-unit. Threads or tapes must meet the requirements specified in paragraph (d)(5) of this section. The group binders and the super-unit binders must be color coded such that the combination of the two binders must positively identify each 25 pair group from every other 25 pair group in the cable. Super-unit binders must be of the color shown in the following table:

SUPER-UNIT BINDER COLORS

Pair Numbers	Binder Color
1–600	White
601–1200	Red
1201–1800	Black
1801–2400	Yellow
2401–3000	Violet

(9) Color binders must not be missing for more than 90 meters (300 feet) from any 25 pair group or from any subgroup used as part of a super-unit. At any cable cross-section, no adjacent 25 pair groups and no more than one subgroup of any super-unit may have missing binders. In no case must the total number of missing binders exceed three. Missing super-unit binders must not be permitted for any distance.

(10) Any reel of cable which contains missing binders must be labeled indicating the colors and location of the binders involved. The labeling must be applied to the reel and also to the cable.

(e) *Screened cable.* (1) Screened cable must be constructed such that a metallic, internal screen(s) must be provided to separate and provide sufficient isolation between the compartments to meet the requirements of this section.

(2) At the option of the user or manufacturer, identified service pairs providing for voice order and fault location may be placed in screened cables.

(i) The number of service pairs provided must be one per twenty-five operating pairs plus two for a cable size up to and including 400 pairs, subject to a minimum of four service pairs. The pair counts for screened cables are as follows:

SCREENED CABLE PAIR COUNTS

Carrier Pair Count	Service Pairs	Total Pair Count
24	4	28
50	4	54
100	6	106
150	8	158
200	10	210
300	14	314
400	18	418

(ii) The service pairs must be equally divided among the compartments. The color sequence must be repeated in each compartment.

(iii) The electrical and physical characteristics of each service pair must meet all the requirements set forth in this section.

(iv) The colors used for the service pairs must be in accordance with the requirements of paragraph (b)(5) of this section. The color code used for the service pairs together with the service pair number are shown in the following table:

COLOR CODE FOR SERVICE PAIRS

Service Pair No.	Color	
	Tip	Ring
1	White	Red
2	”	Black
3	”	Yellow
4	”	Violet
5	Red	Black
6	”	Yellow
7	”	Violet
8	Black	Yellow
9	”	Violet

(3) The screen tape must comply with the requirements specified in ANSI/ICEA S-84–608–1988, paragraphs 5.1 through 5.4.

(4) The screen tape must be tested for dielectric strength by completely removing the protective coating from one end to be used for grounding purposes.

(i) Using an electrode, over a 30 centimeter (1 foot) length, apply a direct current voltage at the rate of rise of 500 volts/second until failure.

(ii) No breakdown should occur below 8 kilovolts.

(f) *Filling compound.* (1) After or during the stranding operation and prior to application of the core wrap, filling compound must be applied to the cable core. The compound must be as nearly colorless as is commercially feasible

and consistent with the end product requirements and pair identification.

(2) The filling compound must comply with the requirements specified in ANSI/ICEA S-84–608–1988, paragraphs 4.4 through 4.4.4.

(3) The individual cable manufacturer must satisfy RUS that the filling compound selected for use is suitable for its intended application. The filling compound must be applied to the cable in such a manner that the cable components will not be degraded.

(g) *Core wrap*. (1) The core wrap must comply with the requirements specified in ANSI/ICEA-S-84–608–1988, paragraph 4.3.

(2) If required for manufacturing reasons, white or colored binders of nonhygroscopic and nonwicking material may be applied over the core and/or wrap. When used, binders must meet the requirements specified in paragraph (d)(5) of this section.

(3) Sufficient filling compound must be applied to the core wrap so that voids or air spaces existing between the core and the inner side of the core wrap are minimized.

(h) *Flooding compound*. (1) Sufficient flooding compound must be applied on all sheath interfaces so that voids and air spaces in these areas are minimized. When the optional armored design is used, the flooding compound must be applied between the core wrap and shield, between the shield and armor, and between the armor and the jacket so that voids and air spaces in these areas are minimized. The use of floodant over the outer metallic substrate is not required if uniform bonding, per paragraph (i)(7) of this section, is achieved between the plastic-clad metal and the jacket.

(2) The flooding compound must comply with the requirements specified in ANSI/ICEA S-84–608–1988, paragraph 4.5 and the jacket slip test requirements of appendix A, paragraph (III)(5) of this section.

(3) The individual cable manufacturer must satisfy RUS that the flooding compound selected for use is acceptable for the application.

(i) *Shield and optional armor*. (1) A single corrugated shield must be applied longitudinally over the core wrap.

(2) For unarmored cable the shield overlap must comply with the requirements specified in ANSI/ICEA S-84–608–1988, paragraph 6.3.2. Core diameter is defined as the diameter under the core wrap and binding.

(3) For cables containing the coated aluminum shield/coated steel armor (CACSP) sheath design, the coated aluminum shield must be applied in accordance with the requirements specified in ANSI/ICEA S-84–608–1988, paragraph 6.3.2, Dual Tape Shielding System.

(4) General requirements for application of the shielding material are as follows:

(i) Successive lengths of shielding tapes may be joined during the manufacturing process by means of cold weld, electric weld, soldering with a nonacid flux, or other acceptable means.

(ii) Shield splices must comply with the requirements specified in ANSI/ICEA S-84–608–1988, paragraph 6.3.3.

(iii) The corrugations and the application process of the coated aluminum and copper bearing shields must comply with the requirements specified in ANSI/ICEA S-84–608–1988, paragraph 6.3.1.

(iv) The shielding material must be applied in such a manner as to enable the cable to pass the cold bend test specified in paragraph (l)(3) of this section.

(5) The following is a list of acceptable materials for use as cable shielding. Other types of shielding materials may also be used provided they are accepted by RUS prior to their use.

Standard Cable	Gopher Resistant Cable
8-mil Coated Aluminum [1] 5-mil Copper	10-mil Copper 6-mil Copper-Clad Stainless Steel 5 mil Copper-Clad Stainless Steel 5 mil Copper-Clad Alloy Steel 7-mil Alloy 194 6-mil Alloy 194 8-mil Coated Aluminum [1] and 6-mil Coated Steel [1]

[1] Dimensions of uncoated metal

(i) The 8-mil aluminum tape must be plastic coated on both sides and must comply with the requirements of ANSI/ICEA S-84–608–1988, paragraph 6.2.2.

(ii) The 5-mil copper tape must comply with the requirements specified in ANSI/ICEA S-84–608–1988, paragraph 6.2.3.

(iii) The 10-mil copper tape must comply with the requirements specified in ANSI/ICEA S-84–608–1988, paragraph 6.2.4.

(iv) The 6-mil copper clad stainless steel tape must comply with the requirements specified in ANSI/ICEA S-84–608–1988, paragraph 6.2.5.

(v) The 5-mil copper clad stainless steel tape must be in the fully annealed condition and must conform to the requirements of American Society for Testing and Materials (ASTM) B 694–86, with a cladding ratio of 16/68/16.

(A) The electrical conductivity of the clad tape must be a minimum of 28 percent of the International Annealed Copper Standard (IACS) when measured per ASTM B 193–87.

(B) The tape must be nominally 0.13 millimeter (0.005 inch) thick with a minimum thickness of 0.11 millimeter (0.0045 inch).

(vi) The 5-mil copper clad alloy steel tape must be in the fully annealed condition and the copper component must conform to the requirements of ASTM B 224–80 and the alloy steel component must conform to the requirements of ASTM A 505–87, with a cladding ratio of 16/68/16.

(A) The electrical conductivity of the copper clad alloy steel tape must comply with the requirement specified in paragraph (i)(5)(v)(A) of this section.

(B) The thickness of the copper clad alloy steel tape must comply with the requirements specified in paragraph (i)(5)(v)(B) of this section.

(vii) The 6-mil and 7-mil 194 copper alloy tapes must comply with the requirements specified in ANSI/ICEA S-84–608–1988, paragraph 6.2.6.

(6) The corrugation extensibility of the coated aluminum shield must comply with the requirements specified in ANSI/ICEA S-84–608–1988, paragraph 6.4.

(7) When the jacket is bonded to the plastic coated aluminum shield, the bond between the jacket and shield must comply with the requirements specified in ANSI/ICEA S-84–608–1988, paragraph 7.2.6.

(8) A single plastic-coated steel corrugated armor must be applied longitudinally directly over the coated aluminum shield listed in paragraph (i)(5) of this section with an overlap complying with the requirements specified in ANSI/ICEA S-84–608–1988, paragraph 6.3.2, Outer Steel Tape.

(9) Successive lengths of steel armoring tapes may be joined during the manufacturing process by means of cold weld, electric weld, soldering with a nonacid flux, or other acceptable means. Armor splices must comply with the breaking strength and resistance requirements specified in ANSI/ICEA S-84–608–1988, paragraph 6.3.3.

(10) The corrugations and the application process of the coated steel armor must comply with the requirements specified in ANSI/ICEA S-84–608–1988, paragraph 6.3.1.

(i) The corrugations of the armor tape must coincide with the corrugations of the coated aluminum shield.

(ii) Overlapped portions of the armor tape must be in register (corrugations must coincide at overlap) and in contact at the outer edge.

(11) The armoring material must be so applied to enable the cable to pass the cold bend test as specified in paragraph (l)(3) of this section.

(12) The 6-mil steel tape must be electrolytic chrome-coated steel (ECCS) plastic coated on both sides and must comply with the requirements specified in ANSI/ICEA S-84–608–1988, paragraph 6.2.8.

(13) When the jacket is bonded to the plastic-coated steel armor, the bond between the jacket and armor must comply with the requirement specified in ANSI/ICEA-S-84–608–1988, paragraph 7.2.6.

(j) *Cable jacket.* (1) The jacket must comply with the requirements specified in ANSI/ICEA S-84–608–1988, paragraph 7.2.

(2) The raw materials used for the cable jacket must comply with the requirements specified in ANSI/ICEA S-84–608–1988, paragraph 7.2.1.

(3) Jacketing material removed from or tested on the cable must meet the performance requirements specified in ANSI/ICEA S-84–608–1988, paragraphs 7.2.3 and 7.2.4.

(4) The thickness of the jacket must comply with the requirements specified

in ANSI/ICEA S-84–608–1988, paragraph 7.2.2.

(k) *Electrical requirements*—(1) *Conductor resistance*. The direct current resistance of any conductor in a completed cable and the average resistance of all conductors in a Quality Control Lot must comply with the requirements specified in ANSI/ICEA S-84–608–1988, paragraph 8.1.

(2) *Resistance unbalance*. (i) The direct current resistance unbalance between the two conductors of any pair in a completed cable and the average resistance unbalance of all pairs in a completed cable must comply with the requirements specified in ANSI/ICEA S-84–608–1988, paragraph 8.2.

(ii) The resistance unbalance between tip and ring conductors shall be random with respect to the direction of unbalance. That is, the resistance of the tip conductors shall not be consistently higher with respect to the ring conductors and vice versa.

(3) *Mutual capacitance*. The average mutual capacitance of all pairs in a completed cable and the individual mutual capacitance of any pair in a completed cable must comply with the requirements specified in ANSI/ICEA S-84–608–1988, paragraph 8.3.

(4) *Capacitance difference*. (i) The capacitance difference for completed cables having 75 pairs or greater must comply with the requirement specified in ANSI/ICEA S-84–608–1988, paragraph 8.4.

(ii) When measuring screened cable, the inner and outer pairs must be selected from both sides of the screen.

(5) *Pair-to-pair capacitance unbalance*—(i) *Pair-to-pair*. The capacitance unbalance as measured on the completed cable must comply with the requirements specified in ANSI/ICEA S-84–608–1988, paragraph 8.5.

(ii) *Screened cable*. In cables with 25 pairs or less and within each group of multigroup cables, the pair-to-pair capacitance unbalance between any two pairs in an individual compartment must comply with the requirements specified in ANSI/ICEA S-84–608–1988, paragraph 8.5. The pair-to-pair capacitance unbalances to be considered must be:

(A) Between pairs adjacent in a layer in an individual compartment;

(B) Between pairs in centers of 4 pairs or less in an individual compartment; and

(C) Between pairs in adjacent layers in an individual compartment when the number of pairs in the inner (smaller) layer is 6 or less. The center is counted as a layer.

(iii) In cables with 25 pairs or less, the root-mean-square (rms) value must include all the pair-to-pair unbalances measured for each compartment separately.

(iv) In cables containing more than 25 pairs, the rms value must include the pair-to-pair unbalances in the separate compartments.

(6) *Pair-to-ground capacitance unbalance*—(i) *Pair-to-ground*. The capacitance unbalance as measured on the completed cable must comply with the requirements specified in ANSI/ICEA S-84–608–1988, paragraph 8.6.

(ii) When measuring pair-to-ground capacitance unbalance all pairs except the pair under test are grounded to the shield and/or shield/armor except when measuring cables containing super units in which case all other pairs in the same super unit must be grounded to the shield.

(iii) The screen tape must be left floating during the test.

(iv) Pair-to-ground capacitance unbalance may vary directly with the length of the cable.

(7) *Attenuation*. (i) For nonscreened and screened cables, the average attenuation of all pairs on any reel when measured at 150 and 772 kilohertz must comply with the requirements specified in ANSI/ICEA S-84–608–1988, paragraph 8.7, Solid Column.

(ii) For T1C type cables over 12 pairs, the maximum average attenuation of all pairs on any reel must not exceed the values listed below when measured at a frequency of 1576 kilohertz at or corrected to a temperature of 20 ±1 °C. The test must be conducted in accordance with ASTM D 4566–90.

AWG	Maximum Average Attenuation decibel/kilometer (dB/km) (decibel/mile)
19	13.4 (21.5)
22	18.3 (29.4)
24	23.1 (37.2)

(8) *Crosstalk loss*. (i) The equal level far-end power sum crosstalk loss (FEXT) as measured on the completed cable must comply with the requirements specified in ANSI/ICEA S-84–608–1988, paragraph 8.8, FEXT Table.

(ii) The near-end power sum crosstalk loss (NEXT) as measured on completed cable must comply with the requirements specified in ANSI/ICEA S-84–608–1988, paragraph 8.8, NEXT Table.

(iii) *Screened cable*. (A) For screened cables the NEXT as measured on the completed cable must comply with the requirements specified in ANSI/ICEA S-84–608–1988, paragraphs 8.9 and 8.9.1.

(B) For T1C screened cable the NEXT as measured on the completed cable must comply with the requirements specified in ANSI/ICEA S-84–608–1988, paragraphs 8.9 and 8.9.2.

(9) *Insulation resistance*. The insulation resistance of each insulated conductor in a completed cable must comply with the requirement specified in ANSI/ICEA S-84–608–1988, paragraph 8.11.

(10) *High voltage test*. (i) In each length of completed cable, the insulation between conductors must comply with the requirements specified in ANSI/ICEA S-84–608–1988, paragraph 8.12, Solid Column.

(ii) In each length of completed cable, the dielectric between the shield and/or armor and conductors in the core must comply with the requirements specified in ANSI/ICEA S-84–608–1988, paragraph 8.13, Single Jacketed, Solid Column. In screened cable the screen tape must be left floating.

(iii) *Screened cable*. (A) In each length of completed screened cable, the dielectric between the screen tape and the conductors in the core must comply with the requirement specified in ANSI/ICEA S-84–608–1988, paragraph 8.14.

(B) In this test, the cable shield and/or armor must be left floating.

(11) *Electrical variations*. (i) Pairs in each length of cable having either a ground, cross, short, or open circuit condition will not be permitted.

(ii) The maximum number of pairs in a cable which may vary as specified in paragraph (k)(11)(iii) of this section from the electrical parameters given in this section are listed below. These pairs may be excluded from the arithmetic calculation.

Nominal Pair Count	Maximum Number of Pairs With Allowable Electrical Variation
6–100	1
101–300	2
301–400	3
401–600	4
601 and above	6

(iii) *Parameter variations*. (A) *Capacitance unbalance-to-ground*. If the cable fails either the maximum individual pair or average capacitance unbalance-to-ground requirement and all individual pairs are 3937 picofarad/kilometer (1200 picofarad/1000 feet) or less, the number of pairs specified in paragraph (k)(11)(ii) of this section may be eliminated from the average and maximum individual calculations.

(B) *Resistance unbalance*. Individual pair of 7 percent for all gauges.

(C) *Conductor resistance, maximum*. The following table shows maximum conductor resistance:

AWG	ohms/kilometer	(ohms/1000 feet)
19	29.9	(9.1)
22	60.0	(18.3)
24	94.5	(28.8)
26	151.6	(46.2)

NOTE: RUS recognizes that in large pair count cable (600 pair and above) a cross, short or open circuit condition occasionally may develop in a pair which does not affect the performance of the other cable pairs. In these circumstances rejection of the entire cable may be economically unsound or repairs may be impractical. In such circumstances the manufacturer may desire to negotiate with the customer for acceptance of the cable. No more than 0.5 percent of the pairs may be involved.

(l) *Mechanical requirements*—(1) *Compound flow test*. All cables manufactured in accordance with the requirements of this section must be capable of meeting the compound flow test specified in ANSI/ICEA S-84–608–1988, paragraph 9.1 using a test temperature of 80 ±1 °C.

(2) *Water penetration*. All cables manufactured in accordance with the requirements of this section must be capable of meeting the water penetration test specified in ANSI/ICEA S-84–608–1988, paragraph 9.2.

(3) *Cable cold bend test*. All cables manufactured in accordance with the

requirements of this section must be capable of meeting the cable cold bend test specified in ANSI/ICEA S-84–608–1988, paragraph 9.3.

(4) *Cable impact test*. All cables manufactured in accordance with the requirements of this section must be capable of meeting the cable impact test specified in ANSI/ICEA S-84–608–1988, paragraph 9.4.

(5) *Jacket notch test (CACSP sheath only)*. All cables utilizing the coated aluminum/coated steel sheath (CACSP) design manufactured in accordance with the requirements of this section must be capable of meeting the jacket notch test specified in ANSI/ICEA S-84–608–1988, paragraph 9.5.

(6) *Cable torsion test (CACSP sheath only)*. All cables utilizing the coated aluminum/coated steel sheath (CACSP) design manufactured in accordance with the requirements of this section must be capable of meeting the cable torsion test specified in ANSI/ICEA S-84–608–1988, paragraph 9.6.

(m) *Sheath slitting cord (optional)*. (1) Sheath slitting cords may be used in the cable structure at the option of the manufacturer unless specified by the end user.

(2) When a sheath slitting cord is used it must be nonhygroscopic and nonwicking, continuous throughout a length of cable and of sufficient strength to open the sheath without breaking the cord.

(n) *Identification marker and length marker*. (1) Each length of cable must be identified in accordance with ANSI/ICEA S-84–608–1988, paragraphs 10.1 through 10.1.4. The color of the ink used for the initial outer jacket marking must be either white or silver.

(2) The markings must be printed on the jacket at regular intervals of not more than 0.6 meter (2 feet).

(3) The completed cable must have sequentially numbered length markers in accordance with ANSI/ICEA S-84–608–1988, paragraph 10.1.5. The color of the ink used for the initial outer jacket marking must be either white or silver.

(o) *Preconnectorized cable (optional)*. (1) At the option of the manufacturer and upon request by the purchaser, cables 100 pairs and larger may be factory terminated in 25 pair splicing modules.

(2) The splicing modules must meet the requirements of RUS Bulletin 345–54, PE-52, RUS Specification for Telephone Cable Splicing Connectors (Incorporated by reference at §1755.97), and be accepted by RUS prior to their use.

(p) *Acceptance testing and extent of testing*. (1) The tests described in appendix A of this section are intended for acceptance of cable designs and major modifications of accepted designs. What constitutes a major modification is at the discretion of RUS. These tests are intended to show the inherent capability of the manufacturer to produce cable products having long life and stability.

(2) For initial acceptance, the manufacturer must submit:

(i) An original signature certification that the product fully complies with each section of the specification;

(ii) Qualification Test Data, per appendix A of this section;

(iii) To periodic plant inspections;

(iv) A certification that the product does or does not comply with the domestic origin manufacturing provisions of the ''Buy American'' requirements of the Rural Electrification Act of 1938 (7 U.S.C. 901 *et seq.*);

(v) Written user testimonials concerning field performance of the product; and

(vi) Other nonproprietary data deemed necessary by the Chief, Outside Plant Branch (Telephone).

(3) For requalification acceptance, the manufacturer must submit an original signature certification that the product fully complies with each section of the specification, excluding the Qualification Section, and a certification that the product does or does not comply with the domestic origin manufacturing provisions of the ''Buy American'' requirements of the Rural Electrification Act of 1938 (7 U.S.C. 901 *et seq.*), for acceptance by August 30 of each year. The required data must have been gathered within 90 days of the submission. If the initial acceptance of a product to this specification was within 180 days of August 30, then requalification for that product will not be required for that year.

(4) Initial and requalification acceptance requests should be addressed to:

Chairman, Technical Standards Committee ''A'' (Telephone), Telecommunications Standards Division, Rural Utilities Service, Washington, DC 20250–1500.

(5) *Tests on 100 percent of completed cable*. (i) The shield and/or armor of each length of cable must be tested for continuity in accordance with ANSI/ICEA S-84–608–1988, paragraph 8.16.

(ii) The screen tape of each length of screened cable must be tested for continuity in accordance with ANSI/ICEA S-84–608–1988, paragraph 8.16.

(iii) Dielectric strength between conductors and shield and/or armor must be tested to determine freedom from grounds in accordance with paragraph (k)(10)(ii) of this section.

(iv) Dielectric strength between conductors and screen tape must be tested to determine freedom from grounds in accordance with paragraph (k)(10)(iii) of this section.

(v) Each conductor in the completed cable must be tested for continuity in accordance with ANSI/ICEA S-84–608–1988, paragraph 8.16.

(vi) Dielectric strength between conductors must be tested to insure freedom from shorts and crosses in each length of completed cable in accordance with paragraph (k)(10)(i) of this section.

(vii) Each conductor in the completed preconnectorized cable must be tested for continuity.

(viii) Each length of completed preconnectorized cable must be tested for split pairs.

(ix) The average mutual capacitance must be measured on all cables. If the average mutual capacitance for the first 100 pairs tested from randomly selected groups is between 50 and 53 nanofarad/kilometer (nF/km) (80 and 85 nanofarad/mile), the remainder of the pairs need not be tested on the 100 percent basis (See paragraph (k)(3) of this section).

(6) *Capability tests*. Tests on a quality assurance basis must be made as frequently as is required for each manufacturer to determine and maintain compliance with:

(i) Performance requirements for conductor insulation, jacketing material, and filling and flooding compounds;

(ii) Bonding properties of coated or laminated shielding and armoring materials and performance requirements for screen tape;

(iii) Sequential marking and lettering;

(iv) Capacitance difference, capacitance unbalance, crosstalk, and attenuation;

(v) Insulation resistance, conductor resistance and resistance unbalance;

(vi) Cable cold bend and cable impact tests;

(vii) Water penetration and compound flow tests; and

(viii) Jacket notch and cable torsion tests.

(q) *Summary of records of electrical and physical tests*. (1) Each manufacturer must maintain suitable summary records for a period of at least 3 years of all electrical and physical tests required on completed cable by this section as set forth in paragraphs (p)(5) and (p)(6) of this section. The test data for a particular reel must be in a form that it may be readily available to the purchaser or to RUS upon request.

(2) Measurements and computed values must be rounded off to the number of places or figures specified for the requirement according to ANSI/ICEA S-84–608–1988, paragraph 1.3.

(r) *Manufacturing irregularities*. (1) Repairs to the shield and/or armor are not permitted in cable supplied to end users under this section.

(2) Minor defects in jackets (defects having a dimension of 3 millimeters (0.125 inch) or less in any direction) may be repaired by means of heat fusing in accordance with good commercial practices utilizing sheath grade compounds.

(s) *Preparation for shipment*. (1) The cable must be shipped on reels. The diameter of the drum must be large enough to prevent damage to the cable from reeling or unreeling. The reels must be substantial and so constructed as to prevent damage to the cable during shipment and handling.

(2) The thermal wrap must comply with the requirements of ANSI/ICEA S-84–608–1988, paragraph 10.3. When a thermal reel wrap is supplied, the wrap must be applied to the reel and must be suitably secured in place to minimize thermal exposure to the cable during

storage and shipment. The use of the thermal reel wrap as a means of reel protection will be at the option of the manufacturer unless specified by the end user.

(3) The outer end of the cable must be securely fastened to the reel head so as to prevent the cable from becoming loose in transit. The inner end of the cable must be securely fastened in such a way as to make it readily available if required for electrical testing. Spikes, staples, or other fastening devices which penetrate the cable jacket must not be used. The method of fastening the cable ends must be accepted by RUS prior to its use.

(4) Each length of cable must be wound on a separate reel unless otherwise specified or agreed to by the purchaser.

(5) The arbor hole must admit a spindle 63 millimeters (2.5 inches) in diameter without binding. Steel arbor hole liners may be used but must be accepted by RUS prior to their use.

(6) Each reel must be plainly marked to indicate the direction in which it should be rolled to prevent loosening of the cable on the reel.

(7) Each reel must be stenciled or labeled on either one or both sides with the information specified in ANSI/ICEA S-84–608–1988, paragraph 10.4 and the RUS cable designation:

Cable Designation

BFC
Cable Construction
Pair Count
Conductor Gauge

A = Coated Aluminum Shield
C = Copper Shield
Y = Gopher Resistant Shield
X = Armored, Separate Shield
H = T1 Screened Cable
H1C = T1C Screened Cable
P = Preconnectorized
Example: BFCXH100–22

Buried Filled Cable, Armored (w/separate shield), T1 Screened Cable, 100 pair, 22 AWG.

(8) When cable manufactured to the requirements of this section is shipped, both ends must be equipped with end caps acceptable to RUS.

(9) When preconnectorized cables are shipped, the splicing modules must be protected to prevent damage during shipment and handling. The protection method must be acceptable to RUS and accepted prior to its use.

(10) All cables ordered for use in underground duct applications must be equipped with a factory-installed pulling-eye on the outer end in accordance with ANSI/ICEA S-84–608–1988, paragraph 10.5.2.

(The information and recordkeeping requirements of this section have been approved by the Office of Management and Budget (OMB) under the control number 0572–0059)

APPENDIX A TO § 1755.390—QUALIFICATION TEST METHODS

(I) The test procedures described in this appendix are for qualification of initial designs and major modification of accepted designs. Included in (V) of this appendix are suggested formats that may be used in submitting the test results to RUS.

(II) *Sample selection and preparation*. (1) All testing must be performed on lengths removed sequentially from the same 25 pair, 22 gauge jacketed cable. This cable must not have been exposed to temperatures in excess of 38 °C since its initial cool down after sheathing. The lengths specified are minimum lengths and if desirable from a laboratory testing standpoint longer lengths may be used.

(a) Length A shall be 10 ±0.2 meters (33 ±0.5 feet) long and must be maintained at 23 ±3 °C. One length is required.

(b) Length B shall be 12 ±0.2 meters (40 ±0.5 feet) long. Prepare the test sample by removing the jacket, shield or shield/armor and core wrap for a sufficient distance on both ends to allow the insulated conductors to be flared out. Remove sufficient conductor insulation so that appropriate electrical test connections can be made at both ends. Coil the sample with a diameter of 15 to 20 times its sheath diameter. Three lengths are required.

(c) Length C shall be one meter (3 feet) long. Four lengths are required.

(d) Length D shall be 300 millimeters (1 foot) long. Four lengths are required.

(e) Length E must be 600 millimeters (2 feet) long. Four lengths are required.

(f) Length F shall be 3 meters (10 feet) long and must be maintained at 23 ±3 °C for the duration of the test. Two lengths are required.

(2) *Data reference temperature*. Unless otherwise specified, all measurements must be made at 23 ±3 °C.

(III) *Environmental tests*—(1) *Heat aging test*—(a) *Test samples*. Place one sample each of lengths B, C, D and E in an oven or environmental chamber. The ends of Sample B must exit from the chamber or oven for electrical tests. Securely seal the oven exit holes.

(b) *Sequence of tests.* The samples are to be subjected to the following tests after conditioning:

(i) Water Immersion Test outlined in (III)(2) of this appendix;

(ii) Water Penetration Test outlined in (III)(3) of this appendix;

(iii) Insulation Compression Test outlined in (III)(4) of this appendix; and

(iv) Jacket Slip Strength Test outlined in (III)(5) of this appendix.

(c) *Initial measurements.* (i) For Sample B measure the open circuit capacitance for each odd numbered pair at 1, 150, and 772 kilohertz, and the attenuation at 150 and 772 kilohertz after conditioning the sample at the data reference temperature for 24 hours. Calculate the average and standard deviation for the data of the 13 pairs on a per kilometer or (on a per mile) basis.

(ii) The attenuation at 150 and 772 kilohertz may be calculated from open circuit admittance (Yoc) and short circuit impedance (Zsc) or may be obtained by direct measurement of attenuation.

(iii) Record on suggested formats in (V) of this appendix or on other easily readable formats.

(d) *Heat conditioning.* (i) Immediately after completing the initial measurements, condition the sample for 14 days at a temperature of 65 ±2 °C.

(ii) At the end of this period note any exudation of cable filler. Measure and calculate the parameters given in (III)(1)(c) of this appendix. Record on suggested formats in (V) of this appendix or on other easily readable formats.

(iii) Cut away and discard a one meter (3 foot) section from each end of length B.

(e) *Overall electrical deviation.* (i) Calculate the percent change in all average parameters between the final parameters after conditioning and the initial parameters in (III)(1)(c) of this appendix.

(ii) The stability of the electrical parameters after completion of this test must be within the following prescribed limits:

(A) *Capacitance.* The average mutual capacitance must be within 5 percent of its original value;

(B) The change in average mutual capacitance must be less than 5 percent over frequency 1 to 150 kilohertz; and

(C) *Attenuation.* The 150 and 772 kilohertz attenuation must not have increased by more than 5 percent over their original values.

(2) *Water immersion electrical test*—(a) *Test sample selection.* The 10 meter (33 foot) section of length B must be tested.

(b) *Test sample preparation.* Prepare the sample by removing the jacket, shield or shield/armor, and core wrap for sufficient distance to allow one end to be accessed for test connections. Cut out a series of 6 millimeter (0.25 inch) diameter holes along the test sample, at 30 centimeters (1 foot) intervals progressing successively 90 degrees around the circumference of the cable. Assure that the cable core is exposed at each hole by slitting the core wrapper. Place the prepared sample in a dry vessel which when filled will maintain a one meter (3 foot) head of water over 6 meters (20 feet) of uncoiled cable. Extend and fasten the ends of the cable so they will be above the water line and the pairs are rigidly held for the duration of the test.

(c) *Capacitance testing.* Measure the initial values of mutual capacitance of all odd pairs in each cable at a frequency of 1 kilohertz before filling the vessel with water. Be sure the cable shield or shield/armor is grounded to the test equipment. Fill the vessels until there is a one meter (3 foot) head of water on the cables.

(i) Remeasure the mutual capacitance after the cables have been submerged for 24 hours and again after 30 days.

(ii) Record each sample separately on suggested formats in (V) of this appendix or on other easily readable formats.

(d) *Overall electrical deviation.* (i) Calculate the percent change in all average parameters between the final parameters after conditioning with the initial parameters in (III)(2)(c) of this appendix.

(ii) The average mutual capacitance must be within 5 percent of its original value.

(3) *Water penetration testing.* (a) A watertight closure must be placed over the jacket of length C. The closure must not be placed over the jacket so tightly that the flow of water through pre-existing voids of air spaces is restricted. The other end of the sample must remain open.

(b) Test per Option A or Option B—(i) *Option A.* Weigh the sample and closure prior to testing. Fill the closure with water and place under a continuous pressure of 10 ±0.7 kilopascals (1.5 ±0.1 pounds per square inch gauge) for one hour. Collect the water leakage from the end of the test sample during the test and weigh to the nearest 0.1 gram. Immediately after the one hour test, seal the ends of the cable with a thin layer of grease and remove all visible water from the closure, being careful not to remove water that penetrated into the core during the test. Reweigh the sample and determine the weight of water that penetrated into the core. The weight of water that penetrated into the core must not exceed 8 grams.

(ii) *Option B.* Fill the closure with a 0.2 gram sodium fluorscein per liter water solution and apply a continuous pressure 10 ±0.7 kilopascals (1.5 ±0.1 pounds per square inch gauge) for one hour. Catch and weigh any water that leaks from the end of the cable during the one hour period. If no water leaks from the sample, carefully remove the water from the closure. Then carefully remove the jacket, shield or shield/armor and core wrap

one at a time, examining with an ultraviolet light source for water penetration. After removal of the core wrap, carefully dissect the core and examine for water penetration within the core. Where water penetration is observed, measure the penetration distance. The distance of water penetration into the core must not exceed 127 millimeters (5.0 inches).

(4) *Insulation compression test*—(a) *Test Sample D*. Remove jacket, shield or shield/armor, and core wrap being careful not to damage the conductor insulation. Remove one pair from the core and carefully separate, wipe off core filler, and straighten the insulated conductors. Retwist the two insulated conductors together under sufficient tension to form 10 evenly spaced 360 degree twists in a length of 10 centimeters (4 inches).

(b) *Sample testing*. Center the mid 50 millimeters (2 inches) of the twisted pair between 2 smooth rigid parallel metal plates that are 50 millimeters × 50 millimeters (2 inches × 2 inches). Apply a 1.5 volt direct current potential between the conductors, using a light or buzzer to indicate electrical contact between the conductors. Apply a constant load of 67 newtons (15 pound-force) on the sample for one minute and monitor for evidence of contact between the conductors. Record results on suggested formats in (V) of this appendix or on other easily readable formats.

(5) *Jacket slip strength test*—(a) *Sample selection*. Test Sample E from (III)(1)(a) of this appendix.

(b) *Sample preparation*. Prepare test sample in accordance with the procedures specified in ASTM D 4565–90a.

(c) *Sample conditioning and testing*. Remove the sample from the tensile tester prior to testing and condition for one hour at 50 ±2 °C. Test immediately in accordance with the procedures specified in ASTM D 4565–90a. A minimum jacket slip strength of 67 newtons (15 pound-force) is required. Record the highest load attained.

(6) *Humidity exposure*. (a) Repeat steps (III)(1)(a) through (III)(1)(c)(iii) of this appendix for separate set of samples B, C, D, and E which have not been subjected to prior environmental conditioning.

(b) Immediately after completing the measurements, expose the test sample to 100 temperature cyclings. Relative humidity within the chamber must be maintained at 90 ±2 percent. One cycle consists of beginning at a stabilized chamber and test sample temperature of 52 ±1 °C, increasing the temperature to 57 ±1 °C, allowing the chamber and test samples to stabilize at this level, then dropping the temperature back to 52 ±1 °C.

(c) Repeat steps (III)(1)(d)(ii) through (III)(5)(c) of this appendix.

(7) *Temperature cycling*. (a) Repeat steps (III)(1)(a) through (III)(1)(c)(iii) of this appendix for separate set of samples B, C, D, and E which have not been subjected to prior environmental conditioning.

(b) Immediately after completing the measurements, subject the test sample to the 10 cycles of temperature between a minimum of −40 °C and +60 °C. The test sample must be held at each temperature extreme for a minimum of 1 1/2 hours during each cycle of temperature. The air within the temperature cycling chamber must be circulated throughout the duration of the cycling.

(c) Repeat steps (III)(1)(d)(ii) through (III)(5)(c) of this appendix.

(IV) *Control sample*—(1) *Test samples*. A separate set of lengths A, C, D, E, and F must have been maintained at 23 ±3 °C for at least 48 hours before the testing.

(2) Repeat steps (III)(2) through (III)(5)(c) of this appendix except use length A instead of length B.

(3) *Surge Test*. (a) One length of sample F must be used to measure the breakdown between conductors while the other length of F must be used to measure the core to shield breakdown.

(b) The samples must be capable of withstanding without damage, a single surge voltage of 20 kilovolts peak between conductors, and a 35 kilovolts peak surge voltage between conductors and the shield or shield/armor as hereinafter described. The surge voltage must be developed from a capacitor discharged through a forming resistor connected in parallel with the dielectric of the test sample. The surge generator constants must be such as to produce a surge of 1.5 × 40 microsecond wave shape.

(c) The shape of the generated wave must be determined at a reduced voltage by connecting an oscilloscope across the forming resistor with the cable sample connected in parallel with the forming resistor. The capacitor bank is charged to the test voltage and then discharged through the forming resistor and test sample. The test sample will be considered to have passed the test if there is no distinct change in the wave shape obtained with the initial reduced voltage compared to that obtained after the application of the test voltage.

(V) The following suggested formats may be used in submitting the test results to RUS:

ENVIRONMENTAL CONDITIONING_____

FREQUENCY 1 KILOHERTZ

Pair Number	Capacitance nF/km (nanofarad/mile)	
	Initial	Final
1		
3		
5		
7		
9		
11		
13		
15		
17		
19		
21		
23		
25		
Average x̄		

Overall Percent Difference in Average x̄ _____

ENVIRONMENTAL CONDITIONING_____

FREQUENCY 772 KILOHERTZ

Pair Number	Capacitance nF/km (nanofarad/mile)		Attenuation dB/km (decibel/mile)	
	Initial	Final	Initial	Final
1				
3				
5				
7				
9				
11				
13				
15				
17				
19				
21				
23				
25				
Average x̄				

Overall Percent Difference in Average x̄ Capacitance:_____ Conductance:_____

ENVIRONMENTAL CONDITIONING_____

FREQUENCY 150 KILOHERTZ

Pair Number	Capacitance nF/km (nanofarad/mile)		Attenuation dB/km (decibel/mile)	
	Initial	Final	Initial	Final
1				
3				
5				
7				
9				
11				
13				
15				
17				
19				
21				
23				
25				
Average x̄				

Overall Percent Difference in Average x̄ Capacitance:_____ Conductance:_____

ENVIRONMENTAL CONDITIONING_____

WATER IMMERSION TEST (1 KILOHERTZ)

Pair Number	Capacitance nF/km (nanofarad/mile)		
	Initial	24 Hours	Final
1			
3			
5			
7			
9			
11			
13			
15			
17			
19			
21			
23			
25			
Average x̄			

Overall Percent Difference in Average x̄ _____

WATER PENETRATION TEST

	Option A		Option B	
	End Leakage grams	Weight Gain grams	End Leakage grams	Penetration mm (in.)
Control.				
Heat Age.				
Humidity Exposure.				
Temperature Cycling.				

INSULATION COMPRESSION

	Failures
Control	
Heat Age	
Humidity Exposure	
Temperature Cycling	

JACKET SLIP STRENGTH @ 50 °C

	Load in newtons (pound-force)
Control	
Heat Age	
Humidity Exposure	

JACKET SLIP STRENGTH @ 50 °C—Continued

	Load in newtons (pound-force)
Temperature Cycling	

FILLER EXUDATION (GRAMS)

Heat Age	
Humidity Exposure	
Temperature Cycle	

SURGE TEST (KILOVOLTS)

Conductor to Conductor	
Shield to Conductors	

[58 FR 29338, May 20, 1993; 58 FR 32749, June 11, 1993; as amended at 60 FR 1711, Jan. 5, 1995; 69 FR 18803, Apr. 9, 2004]

§§ 1755.391–1755.396 [Reserved]

§ 1755.397 RUS performance specification for line concentrators.

(a) *General.* (1) This section covers general requirements for a line concentrator (LC) system. This system shall operate in accordance with the manufacturer's specifications. Reliability shall be of prime importance in the design, manufacture and installation of the equipment. The equipment shall automatically provide for:

(i) Terminating subscriber lines at a location remote from the serving central office;

(ii) Concentrating the subscriber lines over a few transmission and supervisory paths to the serving central office; and

(iii) Terminating the lines at the central office without loss of individual identity. A subscriber connected to a line concentrator shall be capable of having essentially the same services as a subscriber connected directly to the central office equipment (COE). Intra-unit calling among subscribers connected to the concentrator may be provided, but is not required.

(2) Industry standards, or portions thereof, referred to in this paragraph (a) are incorporated by reference by RUS. This incorporation by reference was approved by the Director of the Federal Register in accordance with 5 U.S.C. 552 (a) and 1 CFR part 51. Copies of these standards are available for inspection during normal business hours at RUS, room 2838, U.S. Department of Agriculture, Washington, DC 20250, or at the National Archives and Records Administration (NARA). For information on the availability of this material at NARA, call 202–741–6030, or go to: *http://www.archives.gov/federal_register/code_of_federal_regulations/ibr_locations.html.*

(3) American National Standards Institute (ANSI) standards are available from ANSI Inc., 11 West 42nd Street, 13th floor, New York, NY 10036, telephone 212–642–4900.

(i) ANSI Standard S1.4–1983, Specification for Sound Level Meters, including Amendment S1.4A–1985.

(ii) [Reserved]

(4) American Society for Testing Materials (ASTM) are available from 1916 Race Street, Philadelphia, PA 19103, telephone 215–299–5400.

(i) ASTM Specification B33–91, Standard Specifications for Tinned Soft or Annealed Copper Wire for Electrical Purposes.

(ii) [Reserved]

(5) Bell Communications Research (Bellcore) standards are available from Bellcore Customer Service, 8 Corporate Place, Piscataway, NJ 08854, telephone 1–800–521–2673.

(i) TR-TSY-000008, Issue 2, August 1987, Digital Interface between the SLC 96 Digital Loop Carrier System and a Local Digital Switch.

(ii) Bell Communications Research (Bellcore) document TR-TSY-000057, Issue 1, April 1987, including Revision 1, November 1988, Functional Criteria for Digital Loop Carrier Systems.

(iii) Bell Communications Research (Bellcore) Document TR-NWT-000303, Issue 2, December 1992, including Revision 1, December 1993, Integrated Digital Loop Carrier System Generic Requirements, Objectives, and Interface.

(6) Federal Standard H28, Screw-Thread Standards for Federal Services, March 31, 1978, including Change Notice 1, May 28, 1986; Change Notice 2, January 20, 1989; and Change Notice 3, March 12, 1990. Copies may be obtained from the General Services Administration, Specification Section, 490 East L'Enfant Plaza SW, Washington, DC 20407, telephone 202–755–0325.

(7) IEEE standards are available from IEEE Service Center, 445 Hoes Lane,

P.O. Box 1331, Piscataway, NJ 08854, telephone 1–800–521–2673.

(i) IEEE Standard 455–1985, Standard Test Procedure for Measuring Longitudinal Balance of Telephone Equipment Operating in the Voice Band.

(ii) [Reserved]

(8) RUS standards are available from Publications and Directives Management Branch, Administrative Services Division, Rural Utilities Service, room 0180, South Building, U.S. Department of Agriculture, Washington, DC 20250–1500.

(i) RUS Bulletin 345–50, PE–60 (Sept 1979), RUS Specification for Trunk Carrier Systems.

(ii) [Reserved]

(b) *Types of requirements.* (1) Unless otherwise indicated, the requirements listed in this section are considered to be fixed requirements.

(2) The concentrator system shall communicate with standard T1 digital transmission format at a minimum between the concentrator and central office terminals. Analog conversion functions at remote and central office terminals shall be capable of being eliminated to accommodate end-to-end digital transmission.

(3) The LC shall operate properly as an integral part of the telephone network when connected to physical or carrier derived circuits and central offices meeting RUS specifications and other generally accepted telecommunications practices, such as Bellcore documents TR-NWT-000303, Integrated Digital Loop Carrier System Generic Requirements, Objectives and Interface; TR-TSY-000008, Digital Interface between the SLC 96 Digital Loop Carrier System and a Local Digital Switch; and TR-TSY-000057, Functional Criteria for Digital Loop Carrier Systems.

(4) For RUS acceptance consideration of a LC, the manufacturer must certify and demonstrate that all requirements specified in this section are available and in compliance with this section.

(5) Certain requirements are included in this section for features which may not be needed for every application. Such features are identifiable by the inclusion in the requirements of some such phrase as ''when specified by the owner'' or ''as specified by the owner.'' In some cases where an optional feature will not be required by an owner, either now or in the future, a system which does not provide this feature shall be considered to be in compliance with the specification for the specific installation under consideration, but not in compliance with the entire specification.

(6) The owner may properly request bids from any supplier of an RUS accepted LC whose system provides all the features which will be required for a specific installation.

(7) When required by the owner, the supplier shall state compliance to the Carrier Serving Area (CSA) requirements, as stated in Bell Communications Research (Bellcore) Standard TR-TSY-000057, Functional Criteria for Digital Loop Carrier Systems.

(c) *Reliability.* (1) The failure rate of printed circuit boards shall not exceed an average of 2.0 percent per month of all equipped cards in all system terminals during the first 3 months after cutover, and shall not exceed an average of 1.0 percent per month of all equipped cards in all system terminals during the second 3-month period. The failure rate for the equipment shall be less than 0.5 percent per month of all equipped cards in all system terminals after 6 months. A failure is considered to be the failure of a component on the PC board which requires it to be repaired or replaced.

(2) The line concentrator terminal units shall be designed such that there will be no more than 4 hours of total outages in 20 years.

(d) *System type acceptance tests.* General test results will be required on each system type. Any system provided in accordance with this section shall be capable of meeting any requirement in this section on a spot-check basis.

(e) *Features required.* The network control equipment and peripheral equipment shall be comprised of solid-state and integrated circuitry components as far as practical and in keeping with the state-of-the-art and economics of the subject system.

(f) *Subscriber lines*—(1) *General.* (i) The remote LC units shall operate satisfactorily with subscriber lines which meet all of the conditions under the bidder's specifications and all the requirements

of this section. This section recognizes that the loop limit of the line concentrator is dependent upon the transmission facility between the LC central office termination and the LC remote unit. When voice frequency (physical) circuits are used, the loop limit from the COE to the subscriber shall be 1900 ohms (including the telephone set). When electronically derived circuits (carrier, lightwave, etc.) are used, the loop limits of the electronic system will control. The bidder shall identify the loop limits of the equipment to be supplied.

(ii) There should be provisions for such types of lines as ground start, loop start, regular subscriber, pay stations, etc.

(2) *Dialing*. (i) *General*. The line concentrator remote and central office terminal equipment shall satisfactorily transmit dialing information when used with subscriber dials having a speed of operation between 8 and 12 dial pulses per second and a break period of 55 to 65% of the total signaling period.

(ii) *Subscriber dial interdigital time*. The remote and central office LC equipment shall permit satisfactory telecommunications operation when used with subscriber rotary dial interdigital times of 200 milliseconds minimum, and pushbutton dialing with 50 milliseconds minimum.

(iii) *Subscriber line pushbutton dialing frequencies*. The frequency pairs assigned for pushbutton dialing when provided by the central office shall be as listed in this paragraph (f)(2)(iii), with an allowable variation of ±1.5 percent:

Low group frequencies (Hz)	High group frequencies (Hz)			
	1209	1336	1477	1633
697	1	2	3	Spare.
770	4	5	6	Spare.
852	7	8	9	Spare.
941	*	0	#	Spare.

(3) *Ringing*. (i) When LC ringing is generated at the remote end, it shall be automatic and intermittent and shall be cut off from the called line upon removal of the handset at the called station during either the ringing or silent period.

(ii) When ringing generators are provided in the LC on an ancillary basis, they shall be accepted or technically accepted by RUS.

(iii) Where ringing is generated at the remote end, the ringing system shall provide sufficient ringing on a bridged basis over the voltage and temperature limits of this specification and over subscriber loops within the limits stated by the manufacturer. The manufacturer shall state the minimum number (not less than two) of main station ringers that can be used for each ringing option available.

(g) *Traffic*. (1)(i) The minimum grade of service for traffic in the line concentrator shall be B=.005 using the Traffic Table, based on the Erlang Lost-Calls-Cleared Formula. Required grade of service, traffic assumptions and calculations for the particular application being implemented shall be supplied by the bidder.

(ii) Service to customers served by a traffic sensitive LC should not be noticeably different than the service to customers served by the dedicated physical pairs from the central office so that uniform grade of service will be provided to all customers in any class of service. Reference §1755.522(p)(1)(i), RUS General Specification for Digital, Stored Program Controlled Central Office Equipment.

(2) *Traffic and Plant Registers*. Traffic measurements consist of three types—peg count, usage, and congestion. A peg count register scores one count per call attempt per circuit group such as trunks, digit receivers, senders, etc. Usage counters measure the traffic density in networks, trunks and other circuit groups. Congestion registers score the number of calls which fail to find an idle circuit in a trunk group or to find an idle path through the switching network when attempting to connect two given end points. These conditions constitute ''network blocking.''

(3) When required, traffic data will be stored in electronic storage registers or a block of memory consisting of one or more traffic counters for each item to be measured. The bidder shall indicate what registers are to be supplied, their purpose and the means for displaying the information locally (or at a remote location when available).

(h) *Transmission requirements*—(1) *General*. Unless otherwise stated, the requirements in paragraphs (h) (2) through (20) of this section are specified in terms of analog measurements made from Main Distributing Frame (MDF) terminals to MDF terminals excluding cabling loss.

(2) *Telephone transmitter battery supply*. A minimum of 20 milliamperes, dc, shall be provided for the transmitter of the telephone set at the subscriber station under all loop conditions specified by the bidder. The telephone set is assumed to have a resistance of 200 ohms.

(3) *Impedance—subscriber loops*. For the purpose of this section, the input impedance of all subscriber loops served by the equipment is arbitrarily considered to be 900 ohms in series with 2.16 microfarad capacitor at voice frequencies.

(4) *Battery noise*. Noise across the remote terminal battery at power panel distribution bus terminals shall not exceed 35 dBrnC during the specified busy hour.

(5) *Stability*. The long-term allowable variation in loss through the line concentrator system shall be ±0.5 dB from the loss specified by the bidder.

(6) *Return loss*. The specified return loss values are determined by the service and type of port at the measuring end. Two-wire ports are measured at 900 ohms in series with 2.16 microfarads, and 4-wire ports are measured at 600 ohms resistive. When other balance networks are supplied, test equipment arranged for operation with the supplied network(s) may be used. The requirement given shall meet the following cited values on each balance network available in the system:

Line-to-Line or Line-to-Trunk (2–Wire)
Echo Return Loss (ERL)—18 dB, Minimum
Singing Return Loss (SRL)—Low—15 dB, Minimum
Singing Return Loss (SRL)—High—18 dB, Minimum

(7) *Longitudinal balance*. The minimum longitudinal balance, with dc loop currents between 20 to 70 mA, shall be 60 dB at all frequencies between 60 and 2000 Hz, 55 dB at 2700 Hz and 50 dB at 3400 Hz. The method of measurement shall be as specified in the IEEE standard 455, ''Standard Testing Procedure for Measuring Longitudinal Balance of Telephone Equipment Operating in the Voice Band.'' Source voltage level shall be 10 volts root mean square (rms) where conversation battery feed originates at the remote end.

(8) *60 hz longitudinal current immunity*. The LC 60 Hz longitudinal current immunity shall be measured in accordance with Figure 1 of this section. Under test conditions cited on Figure 1 of this section, the system noise shall be 23 dBrnC or less as follows:

Figure 1

Measuring the Effects of Low Frequency Induction

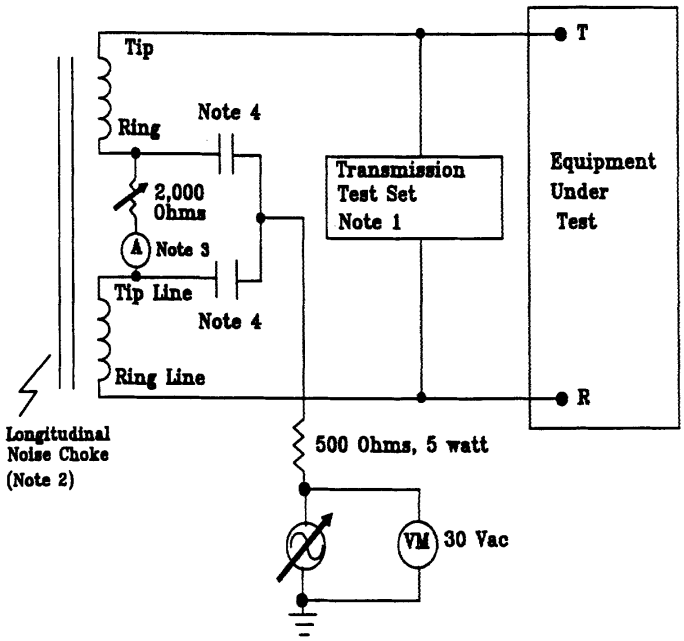

Notes:

1. Wilcom T194C or Equivalent (900 ohm termination, C-message weighting, hold coil off)
2. SNC Noise Choke 35 W, or equivalent
3. Test at 0.020 Adc and 0.070 Adc
4. 2 ± 0.001 microfarad, 150 Vdc

(9) *Steady noise (idle channel at 900 ohm impedance).* Steady noise: Measure on terminated call. Noise measurements shall comply with the following:

Maximum—23 dBrnC0
Average—18 dBrnC0 or Less
3KHz Flat—Less than 35 dBrnO as an Objective

(10) *Impulse noise.* LC central office terminal equipment shall have an impulse noise limit of not more than five counts exceeding 54 dBrnC0 voice band weighted in a 5-minute period on six such measurements made during the busy hour. A WILCOM T–194C Transmission Test Set, or equivalent, should be used for the measurements. The

measurement shall be made by establishing a normal connection from the noise counter through the switching equipment in its off-hook condition to a quiet termination of 900 ohms impedance. Office battery and signaling circuit wiring shall be suitably segregated from voice and carrier circuit wiring, and frame talking battery filters provided, if and as required, in order to meet these impulse noise limits.

(11) *Crosstalk coupling*. Worst case equal level crosstalk shall be 65 dB minimum in the range 200 to 3400 Hz. This shall be measured between any two paths through the system by connecting a 0 dBm0 level tone to the disturbing pair.

(12) *Digital error rate*. The digital line concentrator shall not introduce more than one error in 10^8 bits averaged over a 5-minute period, excluding the least significant bit.

(13) *Quantizing distortion*. (i) The system shall meet the following requirements:

Input level (dBm0) 1004 or 1020 Hz	Minimum signal to distortion with C-message weighting
0 to −30	33 dB
−30 to −40	27 dB
−40 to −45	22 dB

(ii) Due to possible loss of the least significant bit on direct digital connections, a signal to distortion degradation of up to 2 dB may be allowed where adequately justified by the bidder.

(14) *Overload level*. The overload level shall be +3 dBm0.

(15) *Gain tracking (linearity)* shall meet the following requirements:

Input signal level [1]	Maximum gain deviation
+3 to −37 dBm0	±0.5 dB
−37 to −50 dBm0	±1 dB

[1] 1004 Hz reference at 0 dBm0.

(16) *Frequency response (loss relative to 1004 Hz)* for line-to-line (via trunk group or intra-link) connections shall meet the following requirements:

Frequency (Hz)	Loss at 0 dBm0 input [1]
60	20 dB Min.[2]
300	−1 to +3 dB
600 to 2400	+1 dB
3400	−1 to +3 dB

[1] (−) means less loss and (+) means more loss.
[2] Transmit End.

(17) *Envelope delay distortion*. On any properly established connection, the envelope delay distortion shall not exceed the following limits:

Frequency (Hz)	Microseconds
1000 to 2600	190
800 to 2800	350
600 to 3000	500
400 to 3200	700

(18) *Absolute delay*. The absolute one-way delay through the line concentrator, excluding delays associated with the central office switching equipment, shall not exceed 1000 microseconds analog-to-analog measured at 1800 Hz.

(19) *Insertion loss*. The insertion loss in both directions of transmission at 1004 Hz shall be included in the insertion loss requirements for the connected COE switch and shall not increase the overall losses through the combined equipment beyond the values for the COE alone, when operated through a direct digital interface. Systems operated with a (VF) line circuit interface may introduce up to 3 dB insertion loss. Reference § 1755.522(q)(3).

(20) *Detailed requirements for direct digital connections*. (i) This paragraph (h)(20) covers the detailed requirements for the provision of interface units which will permit direct digital connection between the host central office and line concentrator subscriber terminals over digital facilities. The digital transmission system shall be compatible with T1 type span lines using a DS1 interface and other digital interfaces that may be specified by the owner. The RUS specification for the T1 span line equipment is PE–60. Other span line techniques may also be used. Diverse span line routing may be used when specified by the owner.

(ii) The output of a digital-to-digital port shall be Pulse Code Modulation (PCM), encoded in eight-bit words using the mu–255 encoding law and D3 encoding format, and arranged to interface with a T1 span line.

(iii) Signaling shall be by means of Multifrequency (MF) or Dual Pulsing (DP) and the system which is inherent in the A and B bits of the D3 format. In the case where A and B bits are not used for signaling or system control, these bits shall only be used for normal voice and data transmission.

(iv) When a direct digital interface between the span line and the host central office equipment is to be implemented, the following requirements shall be met:

(A) The span line shall be terminated in a central office as a minimum a DS1 (1.544Mb/s) shall be provided;

(B) The digital central office equipment shall be programmed to support the operation of the digital port with the line concentrator subscriber terminal;

(C) The line concentrator subscriber terminal used with a direct digital interface shall be interchangeable with the subscriber terminal used with a central office terminal.

(i) *Alarms*. The system shall send alarms for such conditions as blown fuses, blocked controls, power failure in the remote terminal, etc., along with its own status indication and status of dry relay contact closures or solid-state equivalent to the associated central office alarm circuits. Sufficient system alarm points shall be provided from the remote terminal to report conditions to the central office alarm system. The alarms shall be transmitted from the remote terminal to the central office terminal as long as any part of the connecting link is available for this transmission. Fuses shall be of the alarm and indicator type, and their rating designated by numerals or color code on fuse positions.

(j) *Electrical protection*—(1) *Surge protection*. (i) Adequate electrical protection of line concentrator equipment shall be included in the design of the system. The characteristics and application of protection devices must be such that they enable the line concentrator equipment to withstand, without damage or excessive protector maintenance, the dielectric stresses and currents that are produced in line-to-ground and tip-to-ring circuits through the equipment as a result of induced or conducted lightning or power system fault-related surges. All wire terminals connected to outside plant wire or cable pairs shall be protected from voltage and current surges.

(ii) Equipment must pass laboratory tests, simulating a hostile electrical environment, before being placed in the field for the purpose of obtaining field experience. For acceptance consideration RUS requires manufacturers to submit recently completed results (within 90 days of submittal) of data obtained from the prescribed testing. Manufacturers are expected to detail how data and tests were conducted. There are five basic types of laboratory tests which must be applied to exposed terminals in an effort to determine if the equipment will survive. Figure 2 of this section, Summary of Electrical Requirements and Tests, identifies the tests and their application as follows:

FIGURE 2—SUMMARY OF ELECTRICAL REQUIREMENTS AND TESTS

Test	Application criteria	Peak voltage or current	Surge waveshape	Number of applications and maximum time between	Comments
Current surge	Low impedance paths exposed to surges.	500A or lesser current (see fig. 4).	10×1000 μs	5 each polarity at 1 minute intervals.	None.
60 Hz current carrying	High or low impedance paths exposed to surges.	10A rms or lesser current (see fig. 6).	11 Cycles of 60 Hz (0.183 Sec.).	3 each at 1 minute intervals	None.
AC Power service surge voltage.	AC power service connection	2500V or +3 σ clamping V of arrester employed at 10kV/μs.	1.2×50 μs	5 each polarity at 1 minute intervals.	AC arrester, if used, must be removed. Communications line arresters, if used, remain in place.
Voltage surge	High impedance paths exposed to surges.	1000V or +3 σ dc breakdown of arrester employed.	10×1000 μs	5 each polarity at 1 minute intervals.	All primary arresters, if used, must be removed.
Arrester response delay.	Paths protected by arresters, such as gas tubes, with breakdown dependent on V. rate of rise.	+3 σ breakdown of arrester employed at 100V/μs of rise.	100V/μs rise decay to ½ V. in tube's delay time.	5 each polarity at 1 minute intervals.	All primary arrestors, if used, must be removed.

(iii) Electrical protection requirements for line concentrator equipment can be summarized briefly as follows:

(A) Current surge tests simulate the stress to which a relatively low impedance path may be subjected before main frame protectors break down. Paths with a 100 Hz impedance of 50 ohms or less shall be subjected to current surges, employing a 10×1000 microsecond waveshape as defined in Figure 3 of this section, Surge Waveshape. For the purpose of determining this impedance, arresters which are mounted within the equipment are to be considered zero impedance. The crest current shall not exceed 500A; however, depending on the impedance of the test specimen this value of current may be lower. The crest current through the sample, multiplied by the sample's 100 Hz impedance, shall not exceed 1000 V. Where sample impedance is less than 2 ohms, peak current shall be limited to 500A as shown in Figure 4 of this section, Current Surge Tests. Figures 3 and 4 follow:

Figure 3

Explanation of Surge Waveshape

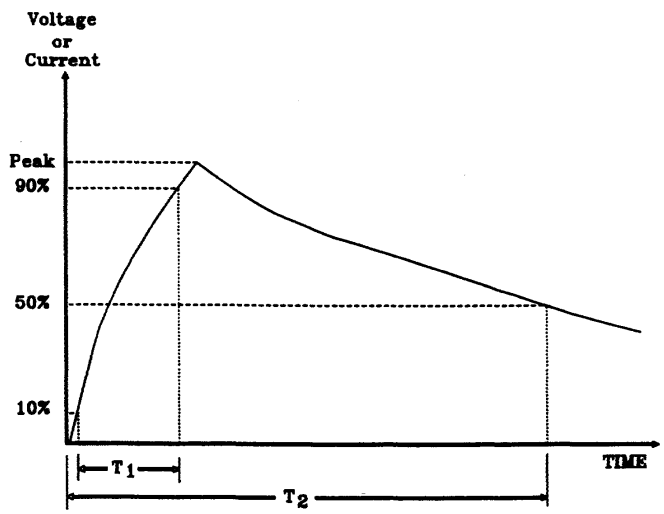

Surge Waveshape is defined as follows:

Rise Time x Time to Decay to Half Crest Value
(For example, 10 x 1000 μs)

Notes: T_1 = Time to determine the rate of rise. The rate of rise is determined as the slope between 10% and 90% of peak voltage or current.

T_2 = Time to 50% of peak voltage (decay to half value).

Figure 4

Current Surge Test

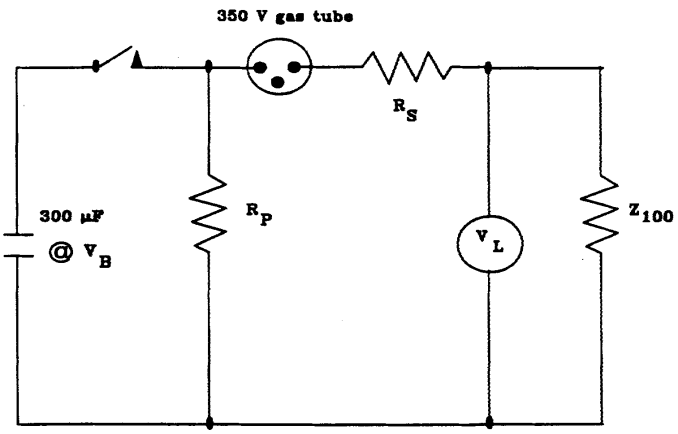

V_L = Not to exceed 1000V
V_B = Charging Voltage
Z_{100} = Test Specimen Impedance to be measured at 100 Hz.
R_P = Parallel Resistance (Waveshape)
R_S = Series Resistance (Current Limiting)

Z_{100}	R_S	R_P	V_B
0	5	∞	2500
1	4	∞	2500
2	3	∞	2500
3	2	∞	1670
4	1	∞	1250
5	0	∞	1000
7.5	0	15	1000
10	0	10	1000
15	0	7.5	1000
20	0	6.7	1000
25	0	6.25	1000
30	0	6	1000
40	0	5.7	1000
50	0	5.5	1000

(B) Sixty Hertz (60 Hz) current carrying tests shall be applied to simulate an ac power fault which is conducted to the unit over the cable pairs. The test shall be limited to 10 amperes Root Mean Square (rms) of 60 Hz ac for a period of 11 cycles (0.1835 seconds) and shall be applied longitudinally from line to ground.

(C) AC power service surge voltage tests shall be applied to the power input terminals of ac powered devices

to simulate switching surges or lightning-induced transients on the ac power system. The test shall employ a 1.2×50 microsecond waveshape with a crest voltage of 2500 V. Communications line protectors may be left in place for these tests.

(D) Voltage surge tests which simulate the voltage stress to which a relatively high impedance path may be subjected before primary protectors break down and protect the circuit. To ensure coordination with the primary protection while reducing testing to the minimum, voltage surge tests shall be conducted at a 1000 volts with primary arresters removed for devices protected by carbon blocks, or the +3 sigma dc breakdown voltage of other primary arresters. Surge waveshape should be 10×1000 microseconds.

(E) Arrester response delay tests are designed to stress the equipment in a manner similar to that caused by the delayed breakdown of gap type arresters when subjected to rapidly rising voltages. Arresters shall be removed for these tests, the peak surge voltage shall be the +3 sigma breakdown voltage of the arrester in question on a voltage rising at 100 V per microsecond, and the time for the surge to decay to half voltage shall equal at least the delay time of the tube as explained in Figure 5 of this section, Arrester Response Delay Time as follows:

Figure 5

Explanation of Arrester Response Delay Time

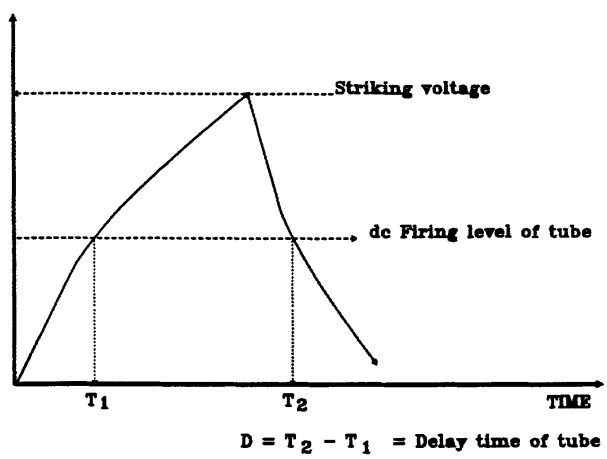

Note: The delay time is that period of time when the potential across an arrester exceeds its dc firing level.

(iv) Tests shall be conducted in the following sequence. As not all tests are required in every application, non-applicable tests should be omitted:

(A) Current Impulse Test;

(B) Sixty Hertz (60 Hz) Current Carrying Tests;

(C) AC Power Service Impulse Voltage Test;

(D) Voltage Impulse Test; and

(E) Arrester Response Delay Time Test.

(v) A minimum of five applications of each polarity for the surge tests and three for the 60 Hz Current Carrying Tests are the minimum required. All tests shall be conducted with not more than 1 minute between consecutive applications in each series of three or five applications to a specific configuration so that heating effects will be cumulative. See Figure 6 of this section, 60 Hz Current Surge Tests as follows:

Figure 6

60 Hz Current Surge Test

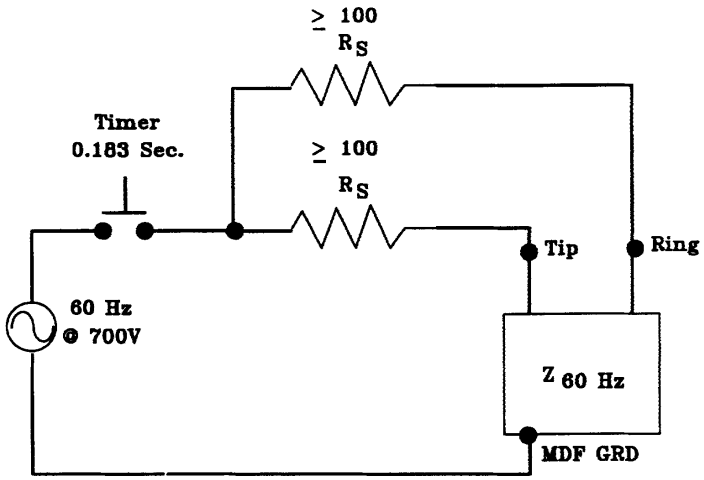

V - 700 Volts root mean square (rms) (Approximately 1000V Peak).

Z_{60} - Test specimen impedance to be measured at 60 Hz.

R_S - Series Resistance (current limiting) in each side of line. (Source impedance never less than 50 Ω longitudinal.)

$Z_{60\ Hz}$	R_S
0	140
10	120
20	100
50	100
Over 50	100

(vi) Tests shall be applied between each of the following terminal combinations for all line operating conditions:

(A) Line tip to ring;

(B) Line ring to ground;

(C) Line tip to ground; and

(D) Line tip and ring tied together to ground.

(2) *Dielectric strength.*(i) Arresters shall be removed for all dielectric strength tests.

(ii) Direct current potentials shall be applied between all line terminals and the equipment chassis and between these terminals and grounded equipment housings in all instances where the circuitry is dc open circuit from the chassis, or connected to the chassis through a capacitor. The duration of all dielectric strength tests shall be at least 1 second. The applied potential shall be at a minimum equal to the plus 3 sigma dc breakdown voltage of the arrester, provided by the line concentrator manufacturer.

(3) *Insulation resistance.*Following the dielectric tests, the insulation resistance of the installed electrical circuits between wires and ground, with the normal equipment grounds removed, shall not be less than 10 megohms at 500 volts dc at a temperature of 68 °F (20 °C) and at a relative humidity of approximately 50 percent. The measurement shall be made after the meter stabilizes, unless the requirement is met sooner. Arresters shall be removed for these tests.

(4) *Self-protection.*(i) All components shall be capable of being continuously energized at rated voltage without injury. Design precautions must be taken to prevent damage to other equipment components when a particular component fails.

(ii) Printed circuit boards or similar equipment employing electronic components should be self-protecting against external grounds applied to the connector terminals. Board components and coatings applied to finished products shall be of such material or so treated that they will not support combustion.

(iii) Every precaution shall be taken to protect electrostatically sensitive components from damage during handling. This shall include written instructions and recommendations.

(k) *Miscellaneous*—(1) *Interconnect wire.*All interconnect wire shall be of soft annealed tinned copper wire meeting the requirements of ASTM Specification B33–91 and of suitable cross-section to provide safe current carrying capacity and mechanical strength. The insulation of installed wire, connected to its equipment and frames, shall be capable of withstanding the same insulation resistance and dielectric strength requirements as given in paragraphs (j)(2) and (j)(3) of this section at a temperature of 120 °F (49 °C), and a relative humidity of 90 percent.

(2) *Wire wrapped terminals.*These terminals are preferred and where used shall be of a material suitable for wire wrapping. The connections to them shall be made with a wire wrapping tool with the following minimum number of successive non-overlapping turns of bare tinned copper wire in contact with each terminal:

(i) 6 turns of 30 gauge;

(ii) 6 turns of 26 gauge;

(iii) 6 turns of 24 gauge; or

(iv) 5 turns of 22 gauge.

(3) *Protection against corrosion.* All metal parts of equipment frames, distributing frames, cable supporting framework and other exposed metal parts shall be constructed of corrosion resistant materials or materials plated or painted to render them adequately corrosion resistant.

(4) *Screws and bolts.* Screw threads for all threaded securing devices shall be of American National Standard form in accordance with Federal Standard H28, unless exceptions are granted to the manufacturer of the switching equipment. All bolts, nuts, screws, and washers shall be of nickel-copper alloy, steel, brass or bronze.

(5) *Environmental requirements.* (i) The bidder shall specify the environmental conditions necessary for safe storage and satisfactory operation of the equipment being bid. If requested, the bidder shall assist the owner in planning how to provide the necessary environment for the equipment.

(ii) To the extent practicable, the following temperature range objectives shall be met:

(A) For equipment mounted in central office and subscriber buildings, the carrier equipment shall operate satisfactory within an ambient temperature range of 32 °F to 120 °F (0 °C to 49 °C) and at 80 percent relative humidity between 50 °F and 100 °F (10 °C and 38 °C); and

(B) Equipment mounted outdoors in normal operation (with cabinet doors closed) shall operate satisfactorily within an ambient temperature range (external to cabinet) of −40 °F to 140 °F (−40 °C to 60 °C) and at 95 percent relative humidity between 50 °F to 100 °F (10 °C to 38 °C). As an alternative to the (60 °C) requirement, a maximum ambient temperature of 120 °F (49 °C) with equipment (cabinet) exposed to direct sunlight may be substituted.

(6) *Stenciling*. Equipment units and terminal jacks shall be adequately designated and numbered. They shall be stenciled so that identification of equipment units and leads for testing or traffic analysis can be made without unnecessary reference to prints or descriptive literature.

(7) *Quantity of equipment bays*. Consistent with system arrangements and ease of maintenance, space shall be provided on the floor plan for an orderly layout of future equipment bays. Readily accessible terminals will be provided for connection to interbay and frame cables to future bays. All cables, interbay and intrabay (excluding power), if technically feasible, shall be terminated at both ends by connectors.

(8) *Radio and television interference*. Measures shall be employed by the bidders to limit the radiation of radio frequencies generated by the equipment so as not to interfere with radio, television receivers, or other sensitive equipment.

(9) *Housing*. (i) When housed in a building supplied by the owner, a complete floor plan including ceiling height, floor loading, power outlets, cable entrances, equipment entry and travel, type of construction, and other pertinent information shall be supplied.

(ii) In order to limit corrosion, all metal parts of the housing and mounting frames shall be constructed of suitable corrosion resistant materials or materials protectively coated to render them adequately resistant to corrosion under the climatic and atmospheric conditions existing in the area in which the housing is to be installed.

(10) *Distributing frame*. (i) The line concentrator terminal equipment located at the central office shall be protected by the central office main distribution frame. The bidder may supply additional protection capability as appropriate. All protection devices (new or existing) shall be arranged to operate in a coordinated manner to protect equipment, limit surge currents, and protect personnel.

(ii) The distributing frame shall provide terminals for terminating all incoming cable pairs. Arresters shall be provided for all incoming cable pairs, or for a smaller number of pairs if specified.

(iii) The current carrying capacity of each arrester and its associated mounting shall coordinate with a #22 gauge copper conductor without causing a self-sustaining fire or permanently damaging other arrester positions. Where all cable pairs entering the housing are #24 gauge or finer, the arresters and mountings need only coordinate with #24 gauge cable conductors.

(iv) Remote terminal protectors may be mounted and arranged so that outside cable pairs may be terminated on the left or bottom side of protectors (when facing the vertical side of the MDF) or on the back surface of the protectors. Means for easy identification of pairs shall be provided.

(v) Protectors shall have a ''dead front'' (either insulated or grounded) where live metal parts are not readily accessible.

(vi) Protectors shall be provided with an accessible terminal of each incoming conductor which is suitable for the attachment of a temporary test lead. They shall also be constructed so that auxiliary test fixtures may be applied to open and test the subscriber's circuit in either direction. Terminals shall be suitable for wire wrapped connections or connectorized.

(vii) If specified, each protector group shall be furnished with a factory assembled tip cable for splicing to the outside cable; the tip cable shall be 20 feet (6.1 m) in length, unless otherwise

specified. Tip cable used shall be RUS accepted.

(viii) Protector makes and types used shall be RUS accepted.

(l) *Power equipment*—(1) *General*. When specified, batteries and charging equipment shall be supplied for the remote terminal of the line concentrator.

(2) *Operating voltage*. (i) The nominal operating voltage of the central office and remote terminal shall be 48 volts dc, provided by a battery with the positive side tied to system ground.

(ii) Where equipment is dc powered, it must operate satisfactorily over a range of 50 volts ±6 volts dc.

(iii) Where equipment is ac powered, it must operate satisfactorily over a range of 120±10 volts or 220±10 volts ac.

(3) *Batteries*. (i) Unless otherwise specified by the owner, sealed batteries shall be supplied for the remote line concentrator terminal.

(ii) The batteries shall have an ampere hour load capacity of no less than 8 busy hours. When an emergency ac supply source is available, the battery reserve may be reduced to 3 busy hours.

(iii) The batteries shall be sealed when they are mounted in the cabinet with the concentrator equipment.

(iv) When specified by the owner, battery heaters shall be supplied in a bidder-furnished housing.

(4) *Charging equipment*. (i) One charger capable of carrying the full dc power load of the remote terminal shall be supplied unless otherwise specified by the owner.

(ii) Charging shall be on a full float basis. The rectifiers shall be of the full wave, self-regulating, constant voltage, solid-state type and shall be capable of being turned on and off manually.

(iii) When charging batteries, the voltage at the battery terminals shall be adjustable and shall be set at the value recommended for the particular battery being charged, provided it is not above the maximum operating voltage of the central office switching equipment. The voltage shall not vary more than ±0.02 volt dc per cell between 10% load and 100% load. Between 3% and 10% load, the output voltage shall not vary more than ±0.04 volt dc per cell. Beyond full load current the output voltage shall drop sharply. The above output voltage shall be maintained with input line voltage variations of plus or minus 10 percent. Provision shall be made to manually change the output voltage of the rectifier to 2.25 volts per cell to provide an equalization charge on the battery.

(iv) The charger noise, when measured with a suitable noise measuring set and under the rated battery capacitance and load conditions, shall not exceed 22 dBrnC. See Figure 7 of this section, Charger Noise Test as follows:

Figure 7

Charger Noise Test

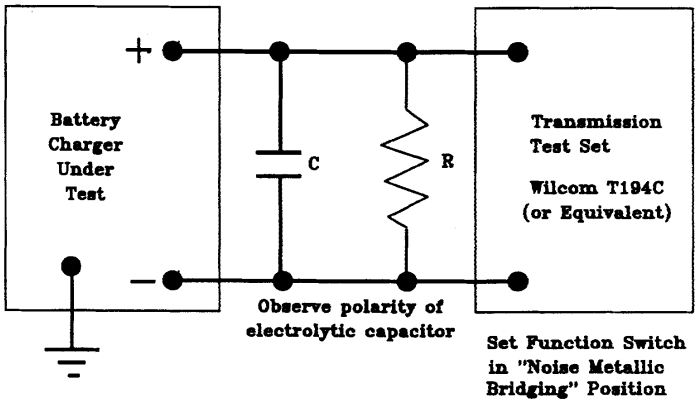

Note (1) The manufacturer may elect to eliminate the capacitor C from the measurement.

Capacitance C in μF = 30,000 μF per ampere-hour per cell. For example, 25 cells at 100 ampere-hour would be equivalent to a capacitance of:

$$(30{,}000 \times 100)/25 = 120{,}000\ \mu F$$

(2) The value of the resistive load R is determined by the nominal battery voltage in volts divided by the full load rating in amperes. For example, for a 48 volt battery and a full load current of 24 amperes, the load resistance R is 48/24 = 2 ohms of appropriate power handling capacity.

(v) The charging equipment shall be provided with a means for indicating a failure of charging current whether due to ac power failure, an internal failure in the charger, or to other circumstances which might cause the output voltage of the charger to drop below the battery voltage. Where a supplementary constant current charger is used, an alarm shall be provided to indicate a failure of the charger.

(vi) Audible noise developed by the charging equipment shall be kept to a minimum. Acoustic noise resulting from operation of the rectifier shall be expressed in terms of dB indicated on a sound level meter conforming to American National Standards Institute S1.4, and shall not exceed 65 dB (A-weighting) measured at any point 5 feet (1.5m) from any vertical surface of the rectifier.

(vii) The charging equipment shall be designed so that neither the charger nor the central office equipment is subject to damage in case the battery circuit is opened for any value of load within the normal limits.

(5) *Power panel.* (i) Battery and charger control switches, dc voltmeters, dc ammeters, fuses and circuit breakers, supervisory and timer circuits shall be provided as required. Portable or panel mounted frequency meters or voltmeters shall be provided as specified by the owner.

(ii) Power panels, cabinets and shelves, and associated wiring shall be designed initially to handle the line concentrator terminal when it reaches its ultimate capacity as specified by the owner.

(iii) The power panel shall be of the ''dead front'' type.

(6) *Ringing equipment.* The ringing system shall provide sufficient ringing on a bridged basis over the voltage and temperature limits of this section and over subscriber drops within the limits stated by the bidder. The ringing system shall be without operational problems such as bell tapping during dialing. The bidder shall state the minimum number (not less than two) of main station ringers that can be used for each ringing option available.

(7) *Interrupter equipment.* The interrupter may be an integral part of the system or may be part of the associated central office equipment connected to the line concentrator central office terminal.

(8) *Special systems.* Manufacturers of LC systems that operate by extending ringing current from the central office shall state their required input ringing (voltage and frequency) and the limitations on the connected subscriber loop.

(m) *Fusing requirements*—(1) *General.*(i) The equipment shall be completely wired and equipped with fuses, trouble signals, and all associated equipment for the wire capacity of the frames or cabinets provided.

(ii) Design precautions shall be taken to prevent the possibility of equipment damage arising from the insertion of an electronic package into the wrong connector or the removal of a package from any connector or improper insertion of the correct card in its connector.

(2) *Fuses.* Fuses and circuit breakers shall be of an alarm and indicator type, except where the fuse or breaker location is indicated on the alarm printout. Their rating shall be designated by numerals or color codes on the fuse or the panel.

(n) *Trouble location and test*—(1) *Equipment.* (i) Trouble indications in the system may be displayed in the form of lights on the equipment units or printed circuit boards.

(ii) When required, a jack or other connector shall be provided to connect a fault or trouble recorder (printer or display).

(2) *Maintenance system.* (i) The maintenance system shall monitor and maintain the system operation without interruption of call processing except for major failures.

(ii) The maintenance system shall be arranged to provide the ability to determine trouble to an individual card, functional group of cards, or other equipment unit.

(o) *Spare parts.* Lists of spare parts and maintenance tools as recommended by the bidder shall be provided. The cost of such tools and spare parts shall be indicated and shall not be included in the base price.

(p) *Drawings and printed material.* (1) The bidder shall supply instructional material for each line concentrator system involved at the time of delivery of the equipment. It is not the intent of this section to require system documentation necessary for the repair of individual circuit boards.

(2) Three complete sets of legible drawings shall be provided for each central office to be accessed. Each set shall include all of the following:

(i) Drawings of major equipment items such as frames, with the location of major component items of equipment shown therein;

(ii) Wiring diagrams indicating the specific method of wiring used on each item of equipment and interconnection wiring between items of equipment;

(iii) Maintenace drawings covering each equipment item that contains replaceable parts, appropriately identifying each part by name and part number; and

(iv) Job drawings including all drawings that are individual to the particular line concentrator involved such as mainframe, power equipment, etc.

(3) The following information shall also be furnished:

(i) A complete index of required drawings;

(ii) An explanation of electrical principles of operation of overall concentrator system;

(iii) A list of tests which can be made with each piece of test equipment furnished and an explanation of the method of making each test;

(iv) A sample of each form recommended for use in keeping records;

(v) The criteria for analyzing results of tests and determining appropriate corrective action;

(vi) A set of general notes on methods of isolating equipment faults to specific printed circuit cards in the equipment;

(vii) A list of typical troubles which might be encountered, together with general indications as to probable location of each trouble; and

(viii) All special line concentrator system grounding requirements.

(4) When installation is to be done by the bidder a complete set of drawings shall be provided by the owner, such as floor plans, lighting, grounding and ac power access.

(q) *Installation and acceptance*—(1) *General*. Paragraphs (q)(2)(i) through (q)(3)(xxi) of this section covers the general requirements for the installation of line concentrator equipment by the bidder, and outlines the general conditions to be met by the owner in connection with such installation work. The responsibilities apply in both the central office installation and remote terminal installations, unless otherwise noted.

(2) *Responsibilities of owner*. The owner shall:

(i) Allow the bidder and its employees free access to the premises and facilities at all hours during the progress of the installation;

(ii) Provide access to the remote site and any other site for development work needed during the installation;

(iii) Take such action as necessary to ensure that the premises are dry and free from dust and in such condition as not to be hazardous to the installation personnel or the material to be installed (not required when remote terminal is not installed in a building);

(iv) Provide heat or air conditioning when required and general illumination in rooms in which work is to be performed or materials stored;

(v) Provide suitable openings in buildings to allow material to be placed in position (not required when a remote terminal is not installed in a building);

(vi) Provide the necessary conduit and commercial and dc-ac inverter output power to the locations shown on the approved floor plan drawings;

(vii) Provide 110 volts a.c., 60 Hz commercial power equipped with a secondary arrester and a reasonable number of outlets for test, maintenance and installation equipment;

(viii) Provide suitable openings or channels and ducts for cables and conductors from floor to floor and from room to room;

(ix) Provide suitable ground leads, as designated by the bidder (not required when remote terminal is not installed in a building);

(x) Provide the necessary wiring, central office ground and commercial power service, with a secondary arrester, to the location of an exterior remote terminal installation based on the voltage and load requirements furnished voltage and load requirements furnished by the bidder;

(xi) Test at the owners expense all lines and trunks for continuity, leakage and loop resistance and ensure that all lines and trunks are suitable for operation with the central office and remote terminal equipment specified;

(xii) Make alterations and repairs to buildings necessary for proper installation of material, except to repair damage for which the bidder or its employees are responsible;

(xiii) Connect outside cable pairs on the distributing frame (those connected to protectors);

(xiv) Furnish all line, class of service assignment, and party line assignment information to permit bidder to program the data base memory within a reasonable time prior to final testing;

(xv) Release for the bidder's use, as soon as possible, such portions of the

existing plant as are necessary for the proper completion of such tests as require coordination with existing facilities including facilities for T1 span lines with properly installed repeaters between the central office and the remote terminal installations;

(xvi) Make prompt inspections as it deems necessary when notified by the bidder that the equipment, or any part thereof, is ready for acceptance;

(xvii) Provide adequate fire protection apparatus at the remote terminal, including one or more fire extinguishers or fire extinguishing systems of the gaseous type, that has low toxicity and effect on equipment;

(xviii) Provide necessary access ports for cable, if underfloor cabling is selected;

(xix) Install equipment and accessory plant devices mounted external to the central office building and external to the repeater and other outside housings including filters, repeater housings, splicing of repeater cable stubs, externally mounted protective devices and other such accessory devices in accordance with written instructions provided by the bidder; and

(xx) Make all cross connections (at the MDF or Intermediate Distribution Frame IDF) between the physical trunk or carrier equipment and the central office equipment unless otherwise specified in appendix A of this section.

(3) *Responsibilities of bidder*. The bidder shall:

(i) Allow the owner and its representatives access to all parts of the building at all times;

(ii) Obtain the owner's permission before proceeding with any work necessitating cutting into or through any part of the building structure such as girders, beams, concrete or tile floors, partitions or ceilings (does not apply to the installation of lag screws, expansion bolts, and similar devices used for fastening equipment to floors, columns, walls, and ceilings);

(iii) Be responsible for and repair all damage to the building due to carelessness of the bidder's workforce, exercise reasonable care to avoid any damage to the owner's switching equipment or other property, and report to the owner any damage to the building which may exist or may occur during its occupancy of the building;

(iv) Consult with the owner before cutting into or through any part of the building structure in all cases where the fireproofing or moisture proofing may be impaired;

(v) Take necessary steps to ensure that all fire fighting apparatus is accessible at all times and all flammable materials are kept in suitable places outside the building;

(vi) Not use gasoline, benzene, alcohol, naphtha, carbon tetrachloride or turpentine for cleaning any part of the equipment;

(vii) Be responsible for delivering the CO and remote terminal equipment to the sites where they will be needed;

(viii) Install the equipment in accordance with the specifications for the line concentrator;

(ix) Have all leads brought out to terminal blocks on the MDF (or IDF if stated in appendix A of this section) and have all terminal blocks identified and permanently labeled;

(x) Use separate shielded type leads grounded at one end only unless otherwise specified by the owner or bidder or tip cables meeting RUS cable crosstalk requirements for carrier frequencies inside the central office;

(xi) Group the cables to separate carrier frequency, voice frequency, signaling, and power leads;

(xii) Make the necessary power and ground connections (location as shown in appendix A of this section) to the purchaser's power terminals and ground bus unless otherwise stated in appendix A of this section (ground wire shall be 6 AWG unless otherwise stated);

(xiii) Place the battery in service in compliance with the recommendations of the battery manufacturer;

(xiv) Make final charger adjustments using the manufacturer's recommended procedure;

(xv) Run all jumpers, except line and trunk jumpers (those connected to protectors) unless otherwise specified in appendix A of this section;

(xvi) Establish and update all data base memories with subscriber information as supplied by the owner until an agreed turnover time;

(xvii) Give the owner notice of completion of the installation at least one week prior to completion;

(xviii) Permit the owner or its representative to conduct tests and inspections after installation has been completed in order that the owner may be assured the requirements for installation are met;

(xix) Allow access, before turnover, by the owner or its representative, upon request, to the test equipment which is to be turned over as a part of the delivered equipment, to permit the checking of the circuit features which are being tested and to permit the checking of the amount of connected equipment to which the test circuits have access;

(xx) Notify the owner promptly of the completion of work of the central office terminals, remote terminals or such portions thereof as are ready for inspection; and

(xxi) Correct promptly all defects for which the bidder is responsible.

(4) *Information to be furnished by bidder*. The bidder shall accompany its bid with the following information:

(i) Two copies of the equipment list and the traffic calculations from which the quantities in the equipment list are determined;

(ii) Two copies of the traffic tables from which the quantities are determined, if other than the Erlang B traffic tables;

(iii) A block diagram of the line concentrator and associated maintenance equipment will be provided;

(iv) A prescribed method and criteria for acceptance of the completed line concentrator which will be subject to review;

(v) This special grounding requirements including the recommended configuration, suggested equipment and installation methods to be used to accomplish them;

(vi) The special handling and equipment requirements to avoid damage resulting from the discharge of static electricity (see paragraph (j)(4)(iii) of this section) or mechanical damage during transit installation and testing;

(vii) The location of technical assistance service, its availability and conditions for owner use and charges for the service by the bidder; and

(viii) The identification of the subscriber loop limits available beyond the line concentrator.

(5) *Installation requirements*. (i) All work shall be done in a neat, workmanlike manner. Equipment frames or cabinets shall be correctly located, carefully aligned, anchored, and firmly braced. Cables shall be carefully laid with sufficient radius of curvature and protected at corners and bends to ensure against damage from handling or vibration. Exterior cabinet installations for remote terminals shall be made in a permanent, eye-pleasing manner.

(ii) All multiple and associated wiring shall be continuous, free from crosses, reverses, and grounds and shall be correctly wired at all points.

(iii) An inspection shall be made by the owner or its representatives prior to performing operational and performance tests on the equipment, but after all installing operations which might disturb apparatus adjustments have been completed. The inspection shall be of such character and extent as to disclose with reasonable certainty any unsatisfactory condition of apparatus or equipment. During these inspections, or inspections for apparatus adjustments, or wire connections, or in testing of equipment, a sufficiently detailed examination shall be made throughout the portion of the equipment within which such condition is observed, or is likely to occur, to disclose the full extent of its existence, where any of the following conditions are observed:

(A) Apparatus or equipment units failing to compare in quantity and type to that specified for the installation;

(B) Apparatus or equipment units damaged or incomplete;

(C) Apparatus or equipment affected by rust, corrosion or marred finish; and

(D) Other adverse conditions resulting from failure to meet generally accepted standards of good workmanship.

(6) *Operational tests*. (i) Operational tests shall be performed on all circuits and circuit components to ensure their proper functioning in accordance with appropriate explanation of the operation of the circuit.

(ii) All equipment shall be tested to ensure proper operation with all components connected in all possible combinations and each line shall be tested for proper ring, ring trip and supervision.

(iii) All fuses shall be verified for continuity and correct rating. Alarm indication shall be demonstrated for each equipped fuse position. An already failed fuse compatible with the fuse position may be used.

(iv) Each alarm or signal circuit shall be checked for correct operation.

(v) A sufficient quantity of locally originating and incoming calls shall be made to demonstrate the function of the line concentrator including all equipped transmission paths. When intra-link calling is supplied, all intra-link transmission paths shall be demonstrated.

(7) *Acceptance tests and data required.* (i) Data shall be supplied to the owner by the bidder in writing as a part of the final documents in closing out the contract as follows:

(A) A detailed cross connect drawing of alarm to power board, central office battery to physical trunks or carrier system, wiring options used in terminals, channels, filters, repeaters, etc., marked in the owner's copy of the equipment manual or supplied separately;

(B) The measured central office supply voltages applied to the equipment terminals or repeaters at the time the jack and test point readings are made and ac supply voltages where equipment is powered from commercial ac sources;

(C) A list of all instruments, including accessories, by manufacturer and type number, used to obtain the data; and

(D) The measurements at all jack or test points recommended by the manufacturer, including carrier frequency level measurements at all carrier terminals and repeaters where utilized.

(ii) Data in the form of a checklist or other notations shall be supplied showing the results of the operational tests.

(iii) The bidder shall furnish to the owner a record of the battery cell or multicell unit voltages measured at the completion of the installation of the switching system before it is placed in commercial service. This is not required at a site where the owner furnishes dc power.

(8) *Joint inspection requirements.* (i) The bidder shall notify the owner in writing at least one week before the date the complete system will be ready for inspection and tests. A joint inspection shall be made by the bidder and the owner (or owner's engineer) to determine that the equipment installation is acceptable. The inspection shall include physical inspection, a review of acceptance test data, operational tests, and sample measurements.

(A) The owner shall review the acceptance test data and compare it to the requirements of this section.

(B) Sample measurements shall be made on all systems installed under this contract. Test methods should follow procedures described in paragraph (g)(5) of this section.

(C) A check shall be made of measured test point and jack readings for compliance with the manufacturer's specifications. This applies also to channels, terminals, carrier frequency repefault locating circuits.

(ii) In the event that the measured data or operational tests show that equipment fails to meet the requirements quirements of this section, the deficiencies are to be resolved as set forth in Article II of the 397 Special Equipment Contract. (Copies are available from RUS, room 0174, U.S. Department of Agriculture, Washington, DC 20250–1500.) The reports of the bidder and the owner shall be detailed as to deficiencies, causes, corrective action necessary, corrective action to be taken, completion time, etc.

(The information and recordkeeping requirements of this section have been approved by the Office of Management and Budget (OMB) under the control number 0572–0059.)

APPENDIX A TO § 1755.397—SPECIFICATION FOR LINE CONCENTRATOR DETAILED EQUIPMENT REQUIREMENTS

(INFORMATION TO BE SUPPLIED BY OWNER)

Telephone Company (Owner)

Name: _____

Location: _____

Number of LC's Required: _____

Line Concentrator Locations:

Location	No. of Lines	Central Office
.....	.....	.....
.....	.....	.....
.....	.....	.....
.....	.....	.....

1. General

1.1 Notwithstanding the bidder's equipment lists, the equipment and materials furnished by the bidder must meet the requirements of paragraphs (a) through (p) of this section, and this appendix A.

1.2 Paragraph (a) through (p) of this section cover the minimum general requirements for line concentrator equipment.

1.3 Paragraph (q) of this section covers the requirements for installation, inspection and testing when such service is included as part of the contract.

1.4 This appendix A covers the technical data for application engineering and detailed equipment requirements insofar as they can be established by the owner. This appendix A shall be filled in by the owner.

1.5 Appendix B of this section covers detailed information on the line concentrator equipment, information on system reliability and traffic capacity as proposed by the bidder. Appendix B of this section is to be filled in by the bidder and must be presented with the bid.

Office Name

(By Location) _____

LC Designation _____

2. Number of Subscriber Lines

	Equipped	Wired only
Single-Party	.....	.....
Pay Station (Type:_____	.....	.....
Other (Describe:_____	.....	.....
Total	.....	.....

3. Loop Resistance

3.1 Number of non-pay station lines having a loop resistance, including the telephone set as follows:

3.1.1 For physical trunks between the remote and the office units, the loop resistance is to include the resistance of the trunk.

	No. of lines
1200–1900 ohms	.....
1901–3200 ohms	.....
3201–4500 ohms	.....

3.1.2 Number of pay station lines having a loop resistance, excluding the telephone set, greater than:

	No. of lines
1200 ohms (Prepay)	.....
1000 ohms (Semi-Postpay)	.....

When physical trunks are used, these resistances include that of the facility between the CO and the remote.

3.1.3 Range extension equipment, if required, is to be provided:

_____ By Bidder

_____ By Owner

(Quantity and Type) _____

_____

4. Traffic Data

4.1 Average combined originating and terminating hundred call seconds (CCS) per line in the busy hour:

_____ CCS/Line. (Assume originating & terminating equal.)

4.2 Percent Intra-Calling _____

4.3 Total Busy Hour Calls _____

5. TYPE or RINGING

5.1 Frequency No.	1.	2.	3.	4.
Frequency (Hz)	.....	.....	.....	.....
Max. No. of Phones/Freq. ..	.....	.....	.....	.....

5.2 Minimum ringing generator capacity to be supplied shall be sufficient to serve _____ lines (each frequency).

6. Central Office Equipment Interface

6.1 COE will be:

6.1.1 COE Manufacturer

_____

Type _____

Year _____

Generic _____

6.1.2 _____ See digital central office specification for the switchboard at _____ .

6.2 Interface will be:

6.2.1 _____ Line Circuit(s)

6.2.2 _____ Direct Digital Interface

6.2.3 _____ Other (Describe)

_____

_____

6.3 Mounting rack for line concentrator furnished by:

_____ Bidder

_____ Owner

(Specify width and height of rack available)
(Width) (Height)

6.4 Equipment to be installed in existing building:

_____ Yes (Attach detailed plan)

_____ No

7. Transmission Facilities

7.1 Transmission facilities between the central office and remote terminals shall be:

7.1.1 Type:

_____ VF Carrier Derived Circuits

_____ Digital Span Line (DS1)

_____ Other

_____

(Attach a layout of the transmission facilities between the central office and the remote terminals describing transmission and signaling parameters, routing and resistance where applicable.)

7.1.2 Utilizes physical plant

_____ Cable Pairs (Existing/New)

_____ Other

_____

NOTE: Unless otherwise stated, physical plant will be supplied by the owner.

7.1.3 Terminal equipment for transmission facility to be supplied by:

_____ Owner

_____ Bidder

7.1.3.1 Carrier e/w voice terminations _____ Yes _____ No

Manufacturer and type _____

Central office voice terminations Equipped _____, Wired Only _____

7.1.3.2 Digital span line (DS1) supplied by

_____ Owner

_____ Bidder

Manufacturer and Type _____

7.1.3.3 Number of repeaters (per span line) _____

7.1.3.4 Diverse (alternate) span line routing required

_____ Yes (Describe in Item 11) _____ No

7.1.3.5 Span line terminations only _____ Yes _____ No

7.1.3.6 Span line power required (CO and Remote Terminals) _____ Yes _____ No

7.1.3.7 Physical facility between CO and remote Loop Resistance _____ ohms, Length _____ meters

8. Power Equipment Requirements

8.1 Central Office Terminal

8.1.1 Owner-furnished −48 volt dc power _____ Yes _____ No

8.1.2 Other (Describe)

_____

8.1.3 Standby power is available _____ Yes _____ No

8.2 Remote Terminal

8.2.1 Owner-furnished −48 vdc power _____ Yes _____ No

8.2.2 Bidder-furnished power supply _____ Yes _____ No

8.2.3 AC power available at site:

_____ 110 vac, 60 Hz, single-phase

_____ Other (Describe in Item 11)

8.2.4 A battery reserve of _____ busy hours shall be provided for this line concentrator terminal when it reaches _____ lines at the traffic rates specified.

8.2.5 Batteries supplied shall be:

_____ Lead Calcium

_____ Stabilized Electrolyte

_____ Sealed Lead Acid

_____ Other (Describe in item 11)

8.2.6 Standby power is available _____ Yes _____ No

9. Remote Terminal

9.1 Mounting

9.1.1 _____ Outside Housing (To be furnished by bidder)

9.1.2 _____ Concrete Slab to be furnished by owner (Bidder to supply construction details after award.)

9.1.3 _____ Manhole, environmentally controlled (Describe in Item 11)

9.1.4 _____ Pedestal Mounting

9.1.5 _____ Pole Mounting (Owner-furnished installed pole)

9.1.6 _____ Prefab Building (Owner-furnished site)

9.2 Equipment is to be installed in an existing building.

_____ Yes _____ No

(Attach detailed plan.)

9.3 Other (Describe)

_____

_____

10. Alternates

11. Explanatory Notes

APPENDIX B TO §1755.397—SPECIFICATION FOR LINE CONCENTRATORS DETAILED REQUIREMENTS; BIDDER SUPPLIED INFORMATION

Telephone Company (Owner)

Name: _____

Location: _____

Line Concentrator Equipment Locations

Central Office Terminal: _____

Remote Terminal: _____

1. General

1.1 The equipment and materials furnished by the bidder must meet the requirements of paragraphs (a) through (p) of this section.

1.2 Paragraph (a) through (p) of this section cover the minimum general requirements for line concentrator equipment.

1.3 Paragraph (q) of this section covers requirements for installation, inspection and testing when such service is included as part of the contract.

1.4 Appendix A of this section covers the technical data for application engineering and detailed equipment requirements insofar as they can be established by the owner. Appendix A of this section is to be filled in by the owner.

1.5 This appendix B covers detailed information on the line concentrator equipment, information as to system reliability and

traffic capacity as proposed by the bidder. This appendix B shall be filled in by the bidder and must be presented with the bid.

2. Performance Objectives

2.1 Reliability (See paragraph (c) of this section)

_____

_____

_____

_____

2.2 Busy Hour Load Capacity and Traffic Delay (See Paragraph (g) of this section)

_____

_____

_____

3. Equipment Quantities Dependent on System Design

3.1 Transmission Facilities between the Central Office and Remote Terminals

Type	Quantity equipped	Quantity wired only
.....	.....	.....
.....	.....	.....
.....	.....	.....

4. Power Requirements

4.1 Central Office Terminal

Voltage _____

Current Drain (Amps) Normal _____, Peak _____

Fuse Qty _____, Size _____, Type _____

Heat Dissipation (BTU/Hr.) _____

_____

4.2 Remote Terminal

AC or DC _____

Voltage _____

Current Drain (Amps) Normal _____, Peak _____

Fuse Qty _____, Size _____, Type _____

Heat Dissipation (BTU/Hr.) _____

_____

Power required for heating or cooling equipment in remote bidder-furnished housing

_____

_____

5. Temperature and Humidity Limitations

5.1 Temperature

	Central office	Remote*
Maximum °F (°C)	.....	.....
Minimum °F (°C)	.....	.....

5.2 Relative Humidity

	Central office	Remote*
Maximum	.....	.....
Minimum	.....	.....

* Show conditions outside bidder-furnished housing.

6. Explanatory Notes

[60 FR 44729, Aug. 29, 1995, as amended at 69 FR 18803, Apr. 9, 2004]

§§ 1755.398–1755.399 [Reserved]

§ 1755.400 RUS standard for acceptance tests and measurements of telecommunications plant.

Sections 1755.400 through 1755.407 cover the requirements for acceptance tests and measurements on installed copper and fiber optic telecommunications plant and equipment.

[62 FR 23960, May 2, 1997]

§ 1755.401 Scope.

(a) Acceptance tests outlined in §§ 1755.400 through 1755.407 are applicable to plant constructed by contract or force account. This testing standard provides for the following:

(1) Specific types of tests or measurements for the different types of telecommunications plant and equipment;

(2) The method of measurement and types of measuring equipment;

(3) The expected results and tolerances permitted to meet the acceptable standards and objectives;

(4) Suggested formats for recording the results of the measurements and tests; and

(5) Some probable causes of nonconformance and methods for corrective action, where possible.

(b) Alternative methods of measurements that provide suitable alternative results shall be permitted with the concurrence of the Rural Utilities Service (RUS).

(c) For the purpose of this testing standard, a ''measurement'' shall be defined as an evaluation where quantitative data is obtained (e.g., resistance in ohms, structural return loss in decibels (dB), etc.) and a ''test'' shall be defined as an evaluation where no quantitative data is obtained (e.g., a check mark indicating conformance is usually the result of the test).

(d) The sequence of tests and measurements described in this standard have been prepared as a guide. Variations from the sequence may be necessary on an individual application basis.

(e) There is some overlap in the methods of testing shown; also, the extent of each phase of testing may vary on an individual basis. The borrower shall determine the overall plan of testing, the need and extent of testing, and the responsibility for each phase of testing.

[62 FR 23960, May 2, 1997]

§ 1755.402 Ground resistance measurements.

(a) The resistance of the central office (CO) and the remote switching terminal (RST) ground shall be measured before and after it has been bonded to the master ground bar (MGB) where it is connected to the building electric service ground.

(b) The ground resistance of electronic equipment such as span line repeaters, carrier terminal equipment, concentrators, etc. shall be measured.

(c) *Method of measurement*. The connection of test equipment for the ground resistance measurement shall be as shown in Figure 1. Refer to RUS Bulletin 1751F–802, ''Electrical Protection Grounding Fundamentals,'' for a comprehensive discussion of ground resistance measurements.

(d) *Test equipment*. The test equipment for making this measurement is shown in Figure 1 as follows:

FIGURE 1

GROUND RESISTANCE MEASUREMENT (1), (2)

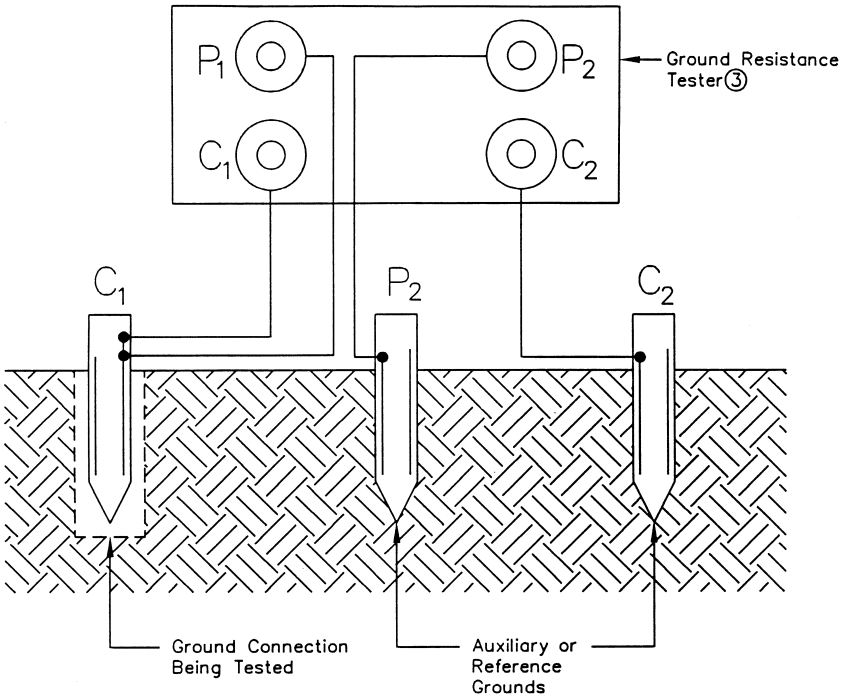

Notes:

(1.) Measurement procedure for COs, RSTs, and electronic equipment housings approximately 10 ft by 10 ft (3 m by 3m) or smaller shall be as follows: The minimum distance between the CO ground (C_1) being tested and C_2 = 100 ft (30.5 m). Take several measurements moving P_2 from 50 ft to 75 ft (15.2 m to 23 m) away from CO ground C_2. Resistance should initially rise then level off and then start rising again. The value to record for CO ground resistance is the value where it levels off which usually should occur with P_2 at 62 % of the distance between the CO ground and C_2.

(2.) Measurement procedure for COs, RSTs, and electronic equipment housings larger than 10 ft by 10 ft (3 m by 3 m) shall be in accordance with the test equipment manufacturer's instructions.

(3.) Dynatel Research–Vibroground, General Radio–Megger Bridge, Associate Research–Megohm Meter or equivalent.

(e) *Applicable results.* (1) For the CO and RST, the resistance after the bond has been made to the MGB electric service ground shall not exceed 5 ohms. Where the measured ground resistance exceeds 5 ohms, the borrower shall determine what additional grounding, if any, shall be provided.

(2) For electronic equipment, the ground resistance shall not exceed 25 ohms. Where the measured ground resistance exceeds 25 ohms, the borrower shall determine what additional grounding, if any, shall be provided.

(3) When ground resistance measurements exceed the ground resistance requirements of paragraphs (e)(1) and (e)(2) of this section, refer to RUS Bulletin 1751F–802, ''Electrical Protection Grounding Fundamentals,'' for suggested methods of reducing the ground resistance.

(f) *Data record*. Results of the CO and RST ground resistance measurements shall be recorded. A suggested format similar to Format I, Outside Plant Acceptance Tests—Subscriber Loops, in § 1755.407 or a format specified in the applicable construction contract may be used. Results of the electronic equipment ground resistance measurements shall be recorded. A suggested format similar to Format II, Outside Plant Acceptance Tests—Trunk Circuits, in § 1755.407 or a format specified in the applicable construction contract may be used. Data showing approximate moisture content of the soil at the time of measurement, the temperature, the type of soil and a description of the test equipment used shall also be included.

(g) *Probable causes for nonconformance*. Refer to RUS Bulletin 1751F–802, ''Electrical Protection Grounding Fundamentals,'' and Telecommunications Engineering and Construction Manual (TE&CM) Section 810, ''Electrical Protection of Electronic Analog and Digital Central Office Equipment,'' for possible causes of nonconformance and suggested methods for corrective action.

[62 FR 23960, May 2, 1997]

§ 1755.403 Copper cable telecommunications plant measurements.

(a) *Shield or shield/armor continuity*. (1) Tests and measurements shall be made to ensure that cable shields or shield/armors are electrically continuous. There are two areas of concern. The first is shield or shield/armor bonding within a pedestal or splice and the second is shield or shield/armor continuity between pedestals or splices.

(2) Measurement techniques outlined here for verification of shield or shield/armor continuity are applicable to buried cable plant. Measurements of shield continuity between splices in aerial cable plant should be made prior to completion of splicing. Conclusive results cannot be obtained on aerial plant after all bonds have been completed to the supporting strand, multigrounded neutral, etc.

(3) *Method of measurement*. (i) The shield or shield/armor resistance measurements shall be made between pedestals or splices using either a Wheatstone bridge or a volt-ohm meter. For loaded plant, measurements shall be made on cable lengths that do not exceed one load section. For nonloaded plant, measurements shall be made on cable lengths that do not exceed 5,000 feet (ft) (1,524 meters (m)). All bonding wires shall be removed from the bonding lugs at the far end of the cable section to be measured. The step-by-step measurement procedure shall be as shown in Figure 2.

(ii) Cable shield or shield/armor continuity within pedestals or splices shall be measured with a cable shield splice continuity test set. The step-by-step measurement procedure outlined in the manufacturer's operating instructions for the specific test equipment being used shall be followed.

(4) *Test equipment*. (i) The test equipment for measuring cable shield or shield/armor resistance between pedestals or splices is shown in Figure 2 as follows:

FIGURE 2

SHIELD OR SHIELD/ARMOR RESISTANCE MEASUREMENT

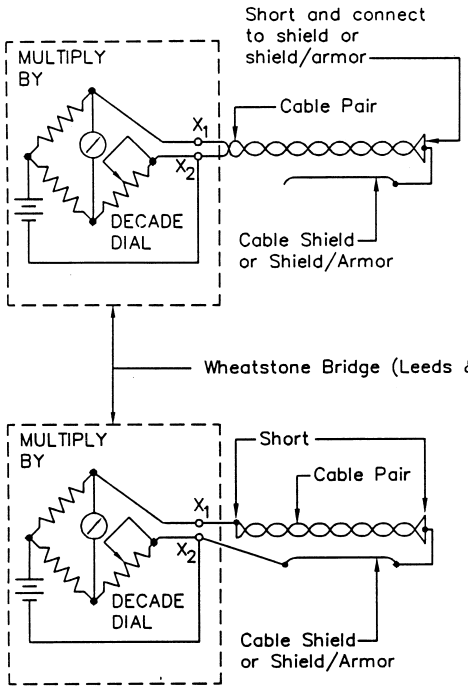

STEP 1

SETTINGS ON TEST SET

A. Set "RES.–VAR–MUR" Key to "RES".
B. Set "RVM–GA–HIL" Switch to "RVM".
C. Set "INT–BA–EXT" Switch to "INT".
D. Connect Pair to Terminals X_1 and X_2 as shown.

PROCEDURE

E. Null galvanometer by operating "MULTIPLY BY" and "DECADE" dials of bridge. Use lowest sensitivity range.
F. Multiply "DECADE" reading in ohms by "MULTIPLY BY" ratio to obtain value of the Loop Resistance (R_1). Record this value.

STEP 2

SETTINGS ON TEST SET

A. Set Keys and Switches as in STEP 1, A through C, above.
B. Connect Shorted Pair and Shield to Terminals X_1 and X_2 as shown.

PROCEDURE

C. Null galvanometer as in STEP 1, E, above.
D. Obtain value of Resistance (R_2) as in STEP 1, F, above.

STEP 3

COMPUTE THE SHIELD OR SHIELD/ARMOR RESISTANCE (R_S)

$$R_S = R_2 - \frac{R_1}{4}$$

(ii) A cable shield splice continuity tester shall be used to measure shield or shield/armor continuity within pedestals or splices.

(5) *Applicable results.* (i) The shield or shield/armor resistance per 1000 ft and per kilometer (km) for cable diameters and types of shielding materials are given in Table 1 (English Units) and Table 2 (Metric Units), respectively as follows:

TABLE 1—SHIELD RESISTANCE @ 68 °F (20 °C) CABLE DIAMETERS VERSUS SHIELD TYPES

[English Units]

Outside diameter inches (in.)	Nominal resistance ohm/1000 ft.					
	A	B	C	D	E	F
0.40–0.49	0.77	1.54	1.65	1.96	2.30	5.51
0.50–0.59	0.64	1.28	1.37	1.63	1.91	4.58
0.60–0.69	0.51	1.03	1.10	1.31	1.53	3.67
0.70–0.79	0.44	0.88	0.94	.....	1.31	3.14

TABLE 1—SHIELD RESISTANCE @ 68 °F (20 °C) CABLE DIAMETERS VERSUS SHIELD TYPES—Continued

[English Units]

Outside diameter inches (in.)	Nominal resistance ohm/1000 ft.					
	A	B	C	D	E	F
0.80–0.89	0.38	0.77	0.82	.....	1.14	2.74
0.90–0.99	0.35	0.69	0.74	.....	1.03	2.47
1.00–1.09	0.31	0.62	0.66	.....	0.92	2.20
1.10–1.19	0.28	0.56	0.60	.....	0.84	2.00
1.20–1.29	0.26	0.51	0.55	.....	0.77	1.84
1.30–1.39	0.24	0.48	0.51	.....	0.71	1.70
1.40–1.49	0.22	0.44	0.47	.....	0.65	1.57
1.50–1.59	0.21	0.41	0.44	.....	0.61	1.47
1.60–1.69	0.19	0.38	0.41	.....	0.57	1.37
1.70–1.79	0.18	0.37	0.39	.....	0.54	1.30
1.80–1.89	0.17	0.35	0.37	.....	0.51	1.24
1.90–1.99	0.16	0.33	0.35	.....	0.49	1.17
2.00–2.09	0.15	0.31	0.33	.....	0.46	1.10
2.10–2.19	0.15	0.29	0.31	.....	0.43	1.03
2.20–2.29	0.14	0.28	0.30	.....	0.42	1.00
2.30–2.39	0.14	0.27	0.29	.....	0.40	0.97
2.40–2.49	0.13	0.25	0.27	.....	0.38	0.90
2.50–2.59	0.12	0.24	0.26	.....	0.36	0.87
2.60–2.69	0.12	0.23	0.25	.....	0.35	0.83
2.70–2.79	0.11	0.22	0.24	.....	0.33	0.80
2.80–2.89	0.11	0.22	0.24	.....	0.33	0.80
2.90–2.99	0.11	0.22	0.23	.....	0.32	0.77
3.00–3.09	0.10	0.21	0.22	.....	0.31	0.73
3.10–3.19	0.10	0.20	0.21	.....	0.29	0.70
3.20–3.29	0.10	0.20	0.21	.....	0.29	0.70
3.30–3.39	0.09	0.19	0.20	.....	0.28	0.67
3.40–3.49	0.09	0.18	0.19	.....	0.26	0.63
3.50–3.59	0.09	0.18	0.19	.....	0.26	0.63
3.60–3.69	0.08	0.17	0.18	.....	0.25	0.60
3.70–3.79	0.08	0.17	0.18	.....	0.25	0.60
3.80–3.89	0.08	0.16	0.17	.....	0.24	0.57
3.90–3.99	0.08	0.16	0.17	.....	0.24	0.57
4.00–4.99	0.07	0.15	0.16	.....	0.22	0.53

Where: Column A–10 mil Copper shield.
Column B—5 mil Copper shield.
Column C—8 mil Coated Aluminum and 8 mil Coated Aluminum/6 mil Coated Steel shields.
Column D—7 mil Alloy 194 shield.
Column E—6 mil Alloy 194 and 6 mil Copper Clad Stainless Steel shields.
Column F—5 mil Copper Clad Stainless Steel and 5 mil Copper Clad Alloy Steel shields.

TABLE 2—SHIELD RESISTANCE @ 68 °F (20 °C) CABLE DIAMETERS VERSUS SHIELD TYPES

[Metric Units]

Outside diameter millimeters (mm)	Nominal Resistance ohm/km					
	A	B	C	D	E	F
10.2—12.5	2.53	5.05	5.41	6.43	7.55	18.08
12.7—15.0	2.10	4.20	4.49	5.35	6.27	15.03
15.2—17.5	1.67	3.38	3.61	4.30	5.02	12.04
17.8—20.1	1.44	2.89	3.08	.....	4.30	10.30
20.3—22.6	1.25	2.53	2.69	.....	3.74	8.99
22.9—25.1	1.15	2.26	2.43	.....	3.38	8.10
25.4—27.7	1.02	2.03	2.16	.....	3.02	7.22
27.9—30.2	0.92	1.84	1.97	.....	2.76	6.56
30.5—32.8	0.85	1.67	1.80	.....	2.53	6.04
33.0—35.3	0.79	1.57	1.67	.....	2.33	5.58
35.6—37.8	0.72	1.44	1.54	.....	2.13	5.15
38.1—40.4	0.69	1.34	1.44	.....	2.00	4.82
40.6—42.9	0.62	1.25	1.34	.....	1.87	4.49
43.2—45.5	0.59	1.21	1.28	.....	1.77	4.26
45.7—48.0	0.56	1.15	1.21	.....	1.67	4.07
48.3—50.5	0.52	1.08	1.15	.....	1.61	3.84
50.8—53.1	0.49	1.02	1.08	.....	1.51	3.61
53.3—55.6	0.49	0.95	1.02	.....	1.41	3.38
55.9—58.2	0.46	0.92	0.98	.....	1.38	3.28
58.4—60.7	0.46	0.89	0.95	.....	1.31	3.18
61.0—63.2	0.43	0.82	0.89	.....	1.25	2.95

TABLE 2—SHIELD RESISTANCE @ 68 °F (20 °C) CABLE DIAMETERS VERSUS SHIELD TYPES—Continued

[Metric Units]

Outside diameter millimeters (mm)	Nominal Resistance ohm/km					
	A	B	C	D	E	F
63.5—65.8	0.39	0.79	0.85	.....	1.18	2.85
66.0—68.3	0.39	0.75	0.82	.....	1.15	2.72
68.6—70.9	0.36	0.72	0.79	.....	1.08	2.62
71.1—73.4	0.36	0.72	0.79	.....	1.08	2.62
73.7—75.9	0.36	0.72	0.75	.....	1.05	2.53
76.2—78.5	0.33	0.69	0.72	.....	1.02	2.39
78.7—81.0	0.33	0.66	0.69	.....	0.95	2.30
81.3—83.6	0.33	0.66	0.69	.....	0.95	2.30
83.6—86.1	0.29	0.62	0.66	.....	0.92	2.20
86.4—88.6	0.29	0.59	0.62	.....	0.85	2.07
88.9—91.2	0.29	0.59	0.62	.....	0.85	2.07
91.4—93.7	0.26	0.56	0.59	.....	0.82	1.97
94.0—96.3	0.26	0.56	0.59	.....	0.82	1.97
96.5—98.8	0.26	0.52	0.56	.....	0.79	1.87
99.1—101.3	0.26	0.52	0.56	.....	0.79	1.87
101.6—103.9	0.23	0.49	0.52	.....	0.72	1.74

Where: Column A—10 mil Copper shield.
Column B—5 mil Copper shield.
Column C—8 mil Coated Aluminum and 8 mil Coated Aluminum/6 mil Coated Steel shields.
Column D—7 mil Alloy 194 shield.
Column E—6 mil Alloy 194 and 6 mil Copper Clad Stainless Steel shields.
Column F—5 mil Copper Clad Stainless Steel and 5 mil Copper Clad Alloy Steel shields.

(ii) All values of shield and shield/armor resistance provided in Tables 1 and 2 in (a)(5)(i) of this section are considered approximations. If the measured value corrected to 68 °F (20 °C) is within #30 percent (%) of the value shown in Table 1 or 2, the shield and shield/armor shall be assumed to be continuous.

(iii) To correct the measured shield resistance to the reference temperature of 68 °F (20 °C) use the following formulae:

$R_{68}=Rt/[1+A(t-68)]$ for English Units

$R_{20}=Rt/[1+A(t-20)]$ for Metric Units

Where:

R_{68}=Shield resistance corrected to 68 °F in ohms.

R_{20}=Shield resistance corrected to 20 °C in ohms.

R_t=Shield resistance at measurement temperature in ohms.

A=Temperature coefficient of the shield tape.

t=Measurement temperature in °F or (°C).

(iv) The temperature coefficients (A) for the shield tapes to be used in the formulae referenced in paragraph (a)(5)(iii) of this section are as follows:

(A) 5 and 10 mil copper = 0.0021 for English units and 0.0039 for Metric units;

(B) 8 mil coated aluminum and 8 mil coated aluminum/6 mil coated steel = 0.0022 for English units and 0.0040 for Metric units;

(C) 5 mil copper clad stainless steel and 5 mil copper clad alloy steel = 0.0024 for English units and 0.0044 for Metric units;

(D) 6 mil copper clad stainless steel = 0.0019 for English units and 0.0035 for Metric units; and

(E) 6 and 7 mil alloy 194 = 0.0013 for English units and 0.0024 for Metric units.

(v) When utilizing shield continuity testers to measure shield and shield/armor continuity within pedestals or splices, refer to the manufacturer's published information covering the specific test equipment to be used and for anticipated results.

(6) *Data record.*Measurement data from shield continuity tests shall be recorded together with anticipated Table 1 or 2 values (see paragraph (a)(5)(i) of this section) in an appropriate format to permit comparison. The recorded data shall include specific location, cable size, cable type, type of shield or shield/armor, if known, etc.

(7) *Probable causes for nonconformance.*Among probable causes for nonconformance are broken or damaged

shields or shield/armors, bad bonding harnesses, poorly connected bonding clamps, loose bonding lugs, etc.

(b) *Conductor continuity*.After placement of all cable and wire plant has been completed and joined together in continuous lengths, tests shall be made to ascertain that all pairs are free from grounds, shorts, crosses, and opens, except for those pairs indicated as being defective by the cable manufacturer. The tests for grounds, shorts, crosses, and opens are not separate tests, but are inherent in other acceptance tests discussed in this section. The test for grounds, shorts, and crosses is inherent when conductor insulation resistance measurements are conducted per paragraph (c) of this section, while tests for opens are inherent when tests are conducted for loop resistance, insertion loss, noise, or return loss measurements, per paragraphs (d), (e), or (f) of this section. The borrower shall make certain that all defective pairs are corrected, except those noted as defective by the cable manufacturer in accordance with the marking provisions of the applicable cable and wire specifications. All defective pairs that are not corrected shall be reported in writing with details of the corrective measures attempted.

(c) *Dc insulation resistance (IR) measurement*. (1) IR measurements shall be made on completed lengths of insulated cable and wire plant.

(2) *Method of measurement*. (i) The IR measurement shall be made between each conductor and all other conductors, sheath, shield and/or shield/armor, and/or support wire electrically connected together and to the main distributing frame (MDF) ground. The measurement shall be made from the central office with the entire length of the cable under test and, where used with all protectors and load coils connected. For COs containing solid state arresters, the solid state arresters shall be removed before making the IR measurements. Field mounted voice frequency repeaters, where used, may be left connected for the IR test but all carrier frequency equipment, including carrier repeaters and terminals, shall be disconnected. Pairs used to feed power remote from the CO shall have the power disconnected and the tip and ring conductors shall be opened before making IR tests. All conductors shall be opened at the far end of the cable being measured.

(ii) IR tests are normally made from the MDF with all CO equipment disconnected at the MDF, but this test may be made on new cables at field locations before they are spliced to existing cables. The method of measurement shall be as shown in Figure 3 as follows:

FIGURE 3

DC INSULATION RESISTANCE MEASUREMENT

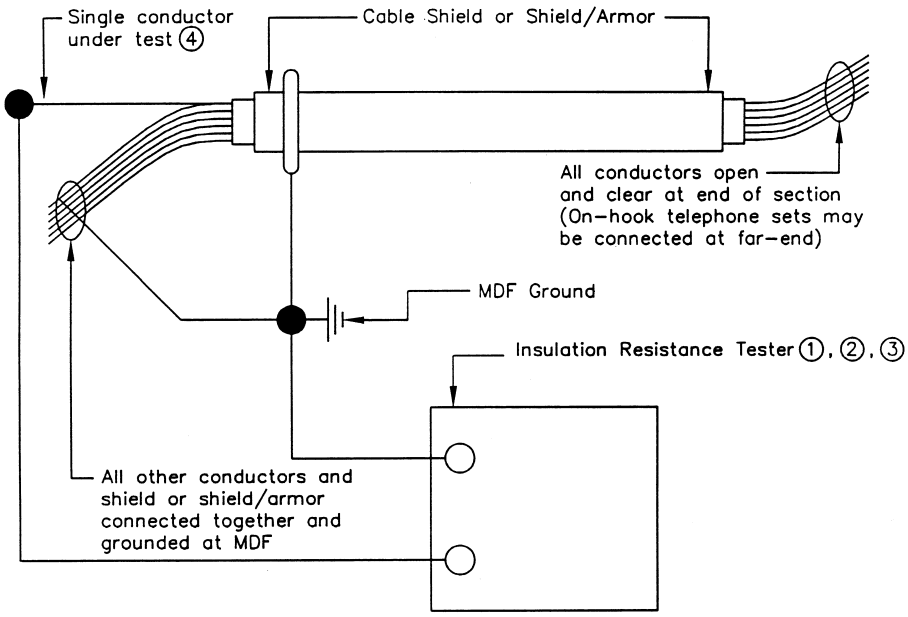

Notes:

1. For hand cranked or battery operated Insulation Resistance Testers, the output voltage should not exceed 500 volts dc.

2. For dc bridge type Megohmmeters, the voltage applied to the conductors under test should not exceed 250 volts dc when using instruments having adjustable test voltage levels.

3. Biddle CO.–Model BM 200, Associate Research–Model 263, General Radio–1864 Megohm Meter, or equivalent.

4. Repeat test for each conductor in cable.

(iii) If the IR of the conductor cannot be measured because of breakdown of lightning arresters by the test voltage, the arrester units shall be removed and the conductor IR retested. If the IR then meets the minimum requirements, the conductor will be considered satisfactory. Immediately following the IR tests, all arrester units which have been removed shall be reinstalled.

(3) *Test equipment.* (i) IR measurements shall be made with either an insulation resistance test set or a direct current (dc) bridge type megohmmeter.

(ii) The IR test set shall have an output voltage not to exceed 500 volts dc and shall be of the hand cranked or battery operated type.

(iii) The dc bridge type megohmmeter, which may be alternating current (ac) powered, shall have scales and multiplier which make it possible to accurately read IR from 1 megohm to 1 gigohm. The voltage applied to the conductors under test shall not exceed ''250 volts dc'' when using an instrument having adjustable test voltage levels. This will help to prevent breakdown of lightning arresters.

(4) *Applicable results.* (i) For all new insulated cable or wire facilities, the expected IR levels are normally greater than 1,000 to 2,000 megohm-mile (1,609 to 3,218 megohm-km). A value of 500 megohm-mile (805 megohm-km) at 68 °F (20 °C) shall be the minimum acceptable value of IR. IR varies inversely with the length and the temperature.

(ii) The megohm-mile (megohm-km) value for a conductor may be computed by multiplying the actual scale reading in megohms on the test set by the length in miles (km) of the conductor under test.

(iii) The objective insulation resistance may be determined by dividing 500 by the length in miles (805 by the length in km) of the cable or wire conductor being tested. The resulting value shall be the minimum acceptable meter scale reading in megohms.

(iv) Due to the differences between various insulating materials and filling compounds used in manufacturing cable or wire, it is impractical to provide simple factors to predict the magnitude of variation in insulation resistance due to temperature. The variation can, however, be substantial for wide excursions in temperature from the ambient temperature of 68 °F (20 °C).

(v) Borrowers should be certain that tip and ring IR measurements of each pair are approximately the same. Borrowers should also be certain that IR measurements are similar for cable or wire sections of similar length and cable or wire type. If some pairs measure significantly lower, borrowers should attempt to improve these pairs in accordance with cable manufacturer's recommendations.

NOTE: Only the megohm-mile (megohm-km) requirement shall be cause for rejection, not individual measurement differences.

(5) *Data record.*The measurement data shall be recorded. Suggested formats similar to Format I, Outside Plant Acceptance Tests—Subscriber Loops, or Format II, Outside Plant Acceptance Tests—Trunk Circuits, in §1755.407 or formats specified in the applicable construction contract may be used.

(6) *Probable causes for nonconformance.*(i) When an IR measurement is below 500 megohm-mile (805 megohm-km), the cable or wire temperature at the time of testing must then be taken into consideration. If this temperature is well above 68 °F (20 °C), the measurement shall be disregarded and the cable or wire shall be remeasured at a time when the temperature is approximately 68 °F (20 °C). If the result is then 500 megohm-mile (805 megohm-km) or greater, the cable or wire shall be considered satisfactory.

(ii) Should the cable or wire fail to meet the 500 megohm-mile (805 megohm-km) requirement when the temperature is known to be approximately 68 °F (20 °C) there is not yet justification for rejection of the cable or wire. Protectors, lightning arresters, etc., may be a source of low insulation resistance. These devices shall be removed from the cable or wire and the cable or wire IR measurement shall be repeated. If the result is acceptable, the cable or wire shall be considered acceptable. The removed devices which caused the low insulation resistance value shall be identified and replaced, if found defective.

(iii) When the cable or wire alone is still found to be below the 500 megohm-mile (805 megohm-km) requirement after completing the steps in paragraph (c)(6)(i) and/or paragraph (c)(6)(ii) of this section, the test shall be repeated to measure the cable or wire in sections to isolate the piece(s) of cable or wire responsible. The cable or wire section(s) that is found to be below the 500 megohm-mile (805 megohm-km) requirement shall be either repaired in accordance with the cable or wire manufacturer's recommended procedure or shall be replaced as directed by the borrower.

(d) *Dc loop resistance and dc resistance unbalance measurement.*(1) When specified by the borrower, dc loop resistance and dc resistance unbalance measurements shall be made on all cable pairs used as trunk circuits. The dc loop resistance and dc resistance unbalance measurements shall be made between CO locations. Measurements shall include all components of the cable path.

(2) Dc loop resistance and dc resistance unbalance measurements shall be made on all cable pairs used as subscriber loop circuits when:

(i) Specified by the borrower;

(ii) A large number of long loops terminate at one location (similar to trunk circuits); or

(iii) Circuit balance is less than 60 dB when computed from noise measurements as described in paragraph (e) of this section.

(3) Dc resistance unbalance is controlled to the maximum possible degree by the cable specification. Allowable random unbalance is specified between tip and ring conductors within each reel. Further random patterns should occur when the cable conductor size changes. Cable meeting the unbalance requirements of the cable specification may under some conditions result in unacceptable noise levels as discussed in paragraph (d)(6)(iii) of this section.

(4) *Method of measurement.* The method of measurement shall be as detailed in Figures 4 and 5.

(5) *Test equipment.* The test equipment is shown in Figures 4 and 5 as follows:

FIGURE 4

DC LOOP RESISTANCE MEASUREMENT

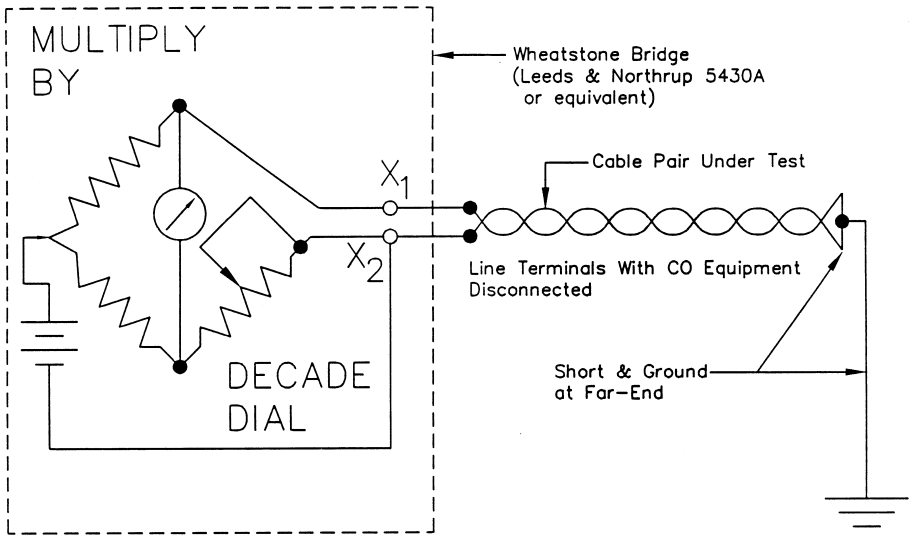

SETTINGS ON TEST SET

1. Set "RES.–VAR–MUR" Key to "RES".
2. Set "RVM–GA–HIL" Switch to "RVM".
3. Set "INT–BA–EXT" Switch to "INT".
4. Connect Pair to Terminals X_1 and X_2 as shown.

PROCEDURE

1. Null galvanometer by operating "MULTIPLY BY" and "DECADE" dials of bridge. Use lowest sensitivity range.
2. Multiply "DECADE" reading in ohms by "MULTIPLY BY" ratio to obtain value of the Loop Resistance.

FIGURE 5

DC LOOP RESISTANCE UNBALANCE MEASUREMENT

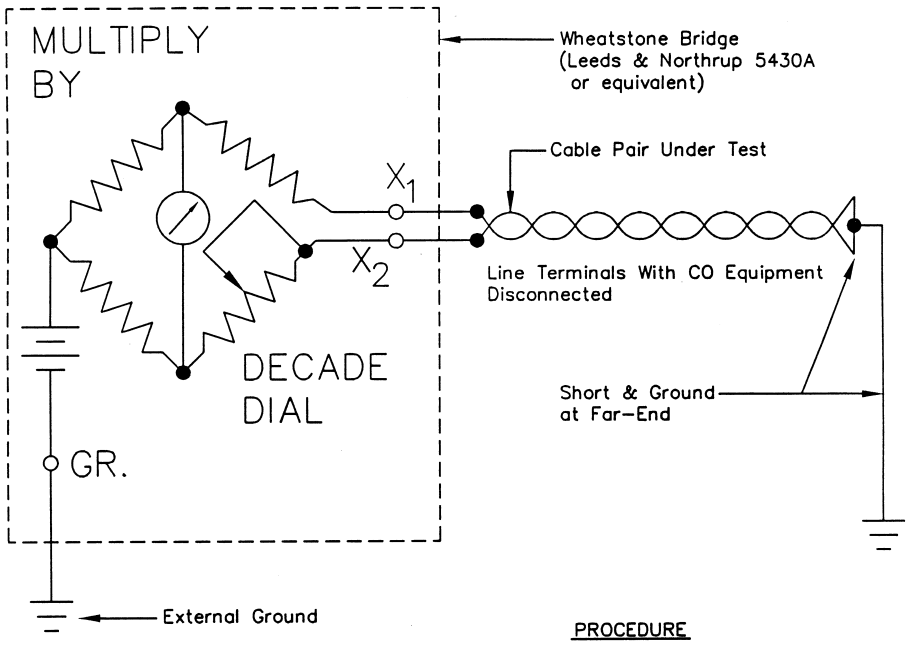

SETTINGS ON TEST SET

1. Connect Terminals X_1 & X_2 as shown.
2. Set "RES.-VAR-MUR" Key to "VAR".
3. "MULTIPLY BY" Switch to 1/1.
4. Set "RVM-GA-HIL" Switch to "RVM".
5. Set "INT-BA-EXT" Switch to "INT".

PROCEDURE

1. Null galvanometer by operating "MULTIPLY BY" and "DECADE" dials of bridge. Use lowest sensitivity range.
2. If continuously varying 1, 10, or 100 ohm switches from 1 to 999 ohms produces a deflection consistently to the left on the galvanometer, reverse the conductors of the cable pair under test to the X_1 & X_2 terminals of the bridge.
3. Vary 1, 10, or 100 ohm switches again until deflection approaches zero. Read "DECADE" dial for Resistance Unbalance in ohms.

(6) *Applicable results.* (i) The measured dc loop resistance shall be within ±5% of the calculated dc loop resistance when corrected for temperature.

(ii) The calculated dc loop resistance is computed as follows:

(A) Multiply the length of each different gauge by the applicable resistance per unit length as shown in Table 3 as follows:

TABLE 3—DC LOOP RESISTANCE @ 68 °F (20 °C)

American wire gauge (AWG)	Loop resistance	
	ohms/1000 ft	ohms/km
19	16.1	52.8
22	32.4	106.3
24	51.9	170.3
26	83.3	273.3

(B) Add the individual resistances for each gauge to give the total calculated dc loop resistance at a temperature of 68 °F (20 °C).

(C) Correct the total calculated dc loop resistance at the temperature of 68 °F (20 °C) to the measurement temperature by the following formulae:

$R_t=R_{68}\times[1+0.0022\times t—68)]$ for English Units

$R_t=R_{20}\times[1+0.0040\times(t—20)]$ for Metric Units

Where:

R_t = Loop resistance at the measurement temperature in ohms.

R_{68} = Loop resistance at a temperature of 68 °F in ohms.

R_{20} = Loop resistance at a temperature of 20 °C in ohms.

t = Measurement temperature in °F or (°C).

(D) Compare the calculated dc loop resistance at the measurement temperature to the measured dc loop resistance to determine compliance with the requirement specified in paragraph (d)(6)(i) of this section.

(iii) Resistance varies directly with temperature change. For copper conductor cables, the dc resistance changes by ±1% for every ±5 °F (2.8 °C) change in temperature from 68 °F (20 °C).

(iv) The dc resistance unbalance between the individual conductors of a pair shall not exceed that value which will result in a circuit balance of less than 60 dB when computed from noise measurements as described in paragraph (e) of this section. It is impractical to establish a precise limit for overall circuit dc resistance unbalance due to the factors controlling its contribution to circuit noise. These factors include location of the resistance unbalance in relation to a low impedance path to ground (close to the central office) and the magnitude of unbalance in short lengths of cable making up the total circuit length. The objective is to obtain the minimum unbalance throughout the entire circuit when it is ascertained through noise measurements that dc resistance unbalance may be contributing to poor cable balance.

(v) Pairs with poor noise balance may be improved by reversing tip and ring conductors of pairs at cable splices. Where dc resistance unbalances are systematic over the total trunk circuit or loop circuit length, tip and ring reversals may be made at frequent intervals. Where the unbalances are concentrated in a shorter section of cable, only one tip and ring reversal should be required. Concentrated dc resistance unbalance produces maximum circuit noise when located adjacent to the central office. Concentrated dc resistance unbalance will contribute to overall circuit noise at a point approximately two-thirds (⅔) of the distance to the subscriber. All deliberate tip and ring reversals shall be tagged and identified to prevent plant personnel from removing the reversals when resplicing these connections in the future. The number of tip and ring reversals shall be held to a minimum.

(vi) A systematic dc resistance unbalance can sometimes be accompanied by other cable parameters that are marginal. Among these are pair-to-pair capacitance unbalance, capacitance unbalance-to-ground, and 150 kilohertz (kHz) crosstalk loss. Engineering judgment has to be applied in each case. Rejection of cable for excessive dc resistance unbalance shall only apply to a single reel length, or shorter.

(7) *Data record.*The measurement data for dc loop resistance and dc resistance unbalance shall be recorded. Suggested formats similar to Format I for subscriber loops and Format II for trunk

circuits in §1755.407 or formats specified in the applicable construction contract may be used.

(8) *Probable causes for nonconformance.* Dc loop resistance and dc resistance unbalance are usually the result of the resistance of individual conductors used in the manufacture of the cable. Resistance unbalance can be worsened by defective splicing of the conductors (splicing connectors, improper crimping tool, etc.).

(e) *Subscriber loop measurement (loop checking).* (1) When specified by the borrower, insertion loss and noise measurements shall be performed on subscriber loops after connection of a line circuit to the loop by the one person method using loop checking equipment from the customer access location. For this method, the central office should be equipped with a 900 ohm plus two microfarad quiet termination and a milliwatt generator having the required test frequencies; or a portable milliwatt generator having the desired frequencies may be used, especially, where several small offices are involved.

(2) At a minimum, insertion loss and frequency response of subscriber loop plant shall be measured at 1,000, 1,700, 2,300, and 2,800 Hertz (Hz). When additional testing frequencies are desired, the additional frequencies shall be specified in the applicable construction contract.

(3) Measurements of insertion loss and noise shall be made on five percent or more of the pairs. A minimum of five pairs shall be tested on each route. Pairs shall be selected on a random basis with greater consideration in the selection given to the longer loops. Consideration shall be given to measuring a large percentage, up to 100 percent, of all loops.

(4) *Method of measurement*—(i) *Insertion loss.* The step-by-step measurement procedure shall be as shown in Figure 6. The output level of the milliwatt generator tones shall be determined prior to leaving the CO. This shall be accomplished by dialing the milliwatt generator number from a spare line at the MDF and measuring with the same equipment to be used in the tests at customer access locations. The output levels shall be recorded for reference later. Insertion loss measurements shall be made across the tip and ring terminals of the pair under test. Figure 6 is as follows:

FIGURE 6

INSERTION LOSS AND FREQUENCY RESPONSE MEASUREMENT AT SUBSCRIBER LOCATION USING LOOP CHECKING EQUIPMENT

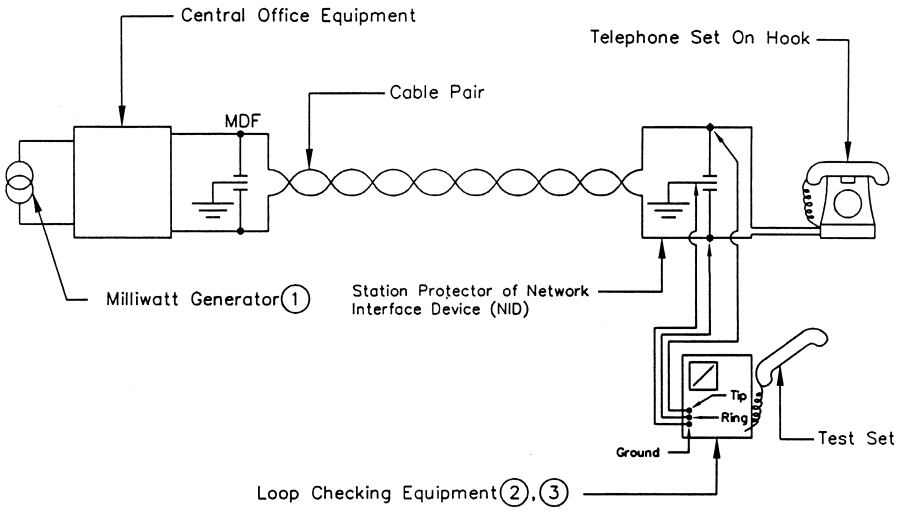

Calibration

1. Before leaving CO connect Loop Checking equipment to idle line at MDF.
   A. Dial number of Milliwatt Generator.
   B. Read and record output level of all tones in dBm for reference.

Notes:

(1) H.P.–204B, H.P.–204C, General Radio–1335, or equivalent.

(2) N.E.C.–125, N.E.C.–37B, Wilcom–136, Wilcom–336, Wilcom–337, or equivalent.

(3) Do not leave test equipment connected and exposed to ringing voltage of incoming call. Ringing voltage could damage test equipment.

Measurement Procedure

1. Connect Loop Checking equipment at subscriber's NID as shown.
2. Dial number of Milliwatt Generator at central office.
3. Verify by listening on the test set that the tones are being received.
4. Switch test set to Circuit Loss mode.
5. Read loss in dBm at each frequency.
6. Record results of loss at each frequency.
7. Subtract the output levels observed at the CO for each tone by the values observed at the subscriber location. The resultant values are the Insertion Loss.
8. Disconnect leads of test equipment from NID when tests are completed.

(ii) *Noise.* The step-by-step measurement procedure shall be as shown in Figure 7. Prior to leaving the CO for testing, dial the 900 ohm plus two microfarad quiet termination from a spare pair and measure the termination to determine that it actually is quiet. Circuit noise (noise-metallic) shall be measured at the customer access location across the tip and ring terminals of the pair under test. Power influence (direct reading with loop checking equipment) shall be measured at the customer access location from tip and ring conductors-to-ground (this connection is completed via the test

unit). The power influence measurement includes the entire talking connection from the quiet termination to the customer. (That is, the power influence measurement includes all the CO equipment which normally makes up the connection.) Figure 7 is as follows:

FIGURE 7

NOISE MEASUREMENT AT SUBSCRIBER LOCATION USING LOOP CHECKING EQUIPMENT

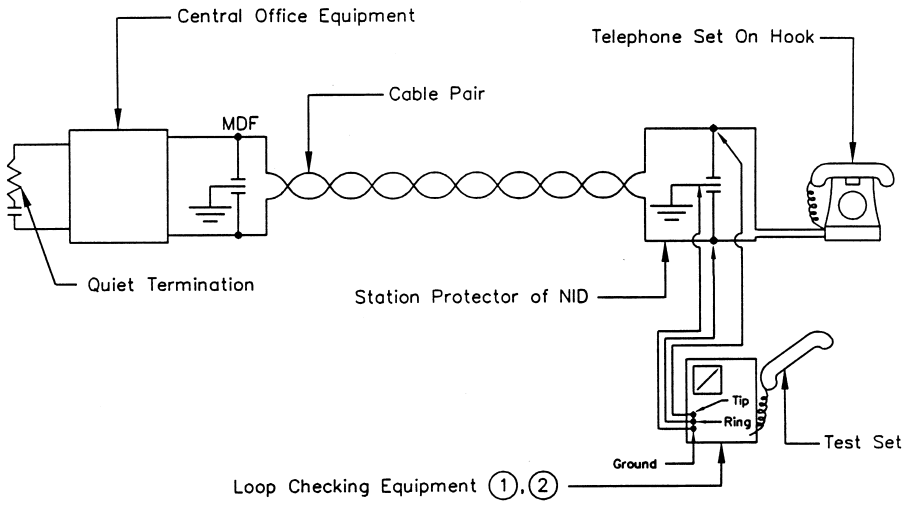

Calibration

1. Before leaving CO connect Loop Checking equipment to idle line at MDF (no outside plant attached).

A. Dial number of Quiet Termination.

B. Read and record Circuit Noise in dBrnc.

Note:

(1.) N.E.C.–125, N.E.C.–37B, Wilcom–136, Wilcom–336, Wilcom–337, or equivalent.

(2.) Do not leave test equipment connected and exposed to ringing voltage of incoming call. Ringing voltage could damage test equipment.

Measurement Procedure

1. Connect Loop Checking equipment at subscriber's NID as shown.
2. Dial number of Quiet Termination in cental office.
3. Switch test set to Circuit Noise (NM) mode.
4. Read and record Circuit Noise value in dBrnc.
5. Switch test set to Power Influence (PI) mode.
6. Read and record Power Influence value in dBrnc.
7. Compute and record apparent Balance (Balance = PI – NM).
8. Disconnect leads of test equipment from NID when tests are completed.

(5) *Test equipment.* (i) Loop checking equipment which is available from several manufacturers may be used for these measurements. The equipment

should have the capability of measuring loop current, insertion loss, circuit noise (NM) and power influence (PI). The test equipment manufacturer's operating instructions shall be followed.

(ii) There should be no measurable transmission loss when testing through loop extenders.

(6) *Applicable results*—(i) *Insertion loss.* (A) For D66 loaded cables (a specific loading scheme using a 66 millihenry inductor spaced nominally at 4,500 ft [1,371 m] intervals) measured at a point one-half section length beyond the last load point, the measured nonrepeated insertion loss shall be within ±10% at 1000, 1700, 2300, and 2800 Hz, ±15% at 3400 Hz and ±20% at 4000 Hz of the calculated insertion loss at the same frequencies and temperature.

(B) For H88 loaded cables (a specific loading scheme using an 88 millihenry inductor spaced nominally at 6,000 ft [1,829 m] intervals) measured at a point one-half section length beyond the last load point, the measured nonrepeatered insertion loss shall be within ±10% at 1000, 1700, and 2300 Hz, ±15% at 2800 Hz, and ±20% at 3400 Hz of the calculated insertion loss at the same frequencies and temperature.

(C) For nonloaded cables, the measured insertion loss shall be within ±10% at 1000, 1700, 2300, and 2800 Hz, ±15% at 3400 Hz and ±20% at 4000 Hz of the calculated insertion loss at the same frequencies and temperature.

(D) For loaded cables, the calculated loss at each desired frequency shall be computed as follows:

(*1*) Multiply the length in miles (km) of each different gauge in the loaded portion of the loop (between the office and a point one-half load section beyond the furthest load point) by the applicable decibel (dB)/mile (dB/km) value shown in Table 4 or 5. This loss represents the total loss for each gauge in the loaded portion of the loop;

(*2*) Multiply the length in miles (km) of each different gauge in the end section or nonloaded portion of the cable (beyond a point one-half load section beyond the furthest load point) by the applicable dB/mile (dB/km) value shown in Table 6. This loss represents the total loss for each gauge in the nonloaded portion of the loop; and

(*3*) The total calculated insertion loss is computed by adding the individual losses determined in paragraphs (e)(6)(i)(D)(*1*) and (e)(6)(i)(D)(*2*) of this section.

(E) For nonloaded cables, the calculated loss at each desired frequency shall be computed by multiplying the length in miles (km) of each different gauge by the applicable dB/mile (dB/km) value shown in Table 6 and then adding the individual losses for each gauge to determine the total calculated insertion loss for the nonloaded loop.

(F) The attenuation information in Tables 4, 5, and 6 are based on a cable temperature of 68 °F (20 °C). Insertion loss varies directly with temperature. To convert measured losses for loaded cables to a different temperature, use the following value for copper conductors: For each ±5 °F (±2.8 °C) change in the temperature from 68 °F (20 °C), change the insertion loss at any frequency by ±1%. To convert measured losses for nonloaded cables to a different temperature, use the following value for copper conductors: For each ±10 °F (±5.6 °C) change in the temperature from 68 °F (20 °C), change the insertion loss at any frequency by ±1%. Tables 4, 5, and 6 are as follows:

TABLE 4—FREQUENCY ATTENUATION @ 68 °F (20 °C) D66 LOADED EXCHANGE CABLES 83 NANOFARAD (NF)/MILE (52 NF/KM) (SEE NOTE)

Frequency (Hz)	Attenuation dB/mile (dB/km) AWG			
	19	22	24	26
200	0.41 (0.26)	0.67 (0.42)	0.90 (0.56)	1.21 (0.75)
400	0.43 (0.26)	0.77 (0.48)	1.09 (0.68)	1.53 (0.95)
600	0.44 (0.27)	0.80 (0.49)	1.17 (0.73)	1.70 (1.06)
800	0.44 (0.27)	0.81 (0.50)	1.21 (0.75)	1.80 (1.12)
1000	0.44 (0.27)	0.82 (0.51)	1.23 (0.76)	1.86 (1.15)
1200	0.45 (0.28)	0.83 (0.52)	1.24 (0.77)	1.91 (1.19)
1400	0.45 (0.28)	0.83 (0.52)	1.26 (0.78)	1.94 (1.20)
1600	0.45 (0.28)	0.84 (0.52)	1.26 (0.78)	1.96 (1.22)
1800	0.45 (0.28)	0.84 (0.52)	1.27 (0.78)	1.98 (1.23)

TABLE 4—FREQUENCY ATTENUATION @ 68 °F (20 °C) D66 LOADED EXCHANGE CABLES 83 NANOFARAD (NF)/MILE (52 NF/KM) (SEE NOTE)—Continued

Frequency (Hz)	Attenuation dB/mile (dB/km) AWG			
	19	22	24	26
2000	0.46 (0.29)	0.85 (0.53)	1.28 (0.79)	1.99 (1.24)
2200	0.46 (0.29)	0.85 (0.53)	1.29 (0.80)	2.01 (1.25)
2400	0.47 (0.29)	0.86 (0.53)	1.30 (0.81)	2.02 (1.26)
2600	0.47 (0.29)	0.87 (0.54)	1.31 (0.81)	2.04 (1.27)
2800	0.48 (0.30)	0.88 (0.55)	1.32 (0.82)	2.07 (1.29)
3000	0.49 (0.30)	0.89 (0.55)	1.34 (0.83)	2.10 (1.30)
3200	0.50 (0.31)	0.91 (0.57)	1.36 (0.84)	2.13 (1.32)
3400	0.52 (0.32)	0.93 (0.58)	1.40 (0.87)	2.19 (1.36)
3600	0.54 (0.34)	0.97 (0.60)	1.45 (0.90)	2.26 (1.40)
3800	0.57 (0.35)	1.02 (0.63)	1.52 (0.94)	2.36 (1.47)
4000	0.62 (0.38)	1.10 (0.68)	1.63 (1.01)	2.53 (1.57)

NOTE: Between end-section lengths of 2,250 ft (686 m) for D66 loading.

TABLE 5—FREQUENCY ATTENUATION @ 68 °F (20 °C) H88 LOADED EXCHANGE CABLES 83 NF/ MILE (52 NF/KM) (SEE NOTE)

Frequency (Hz)	Attenuation dB/mile (dB/km) AWG			
	19	22	24	26
200	0.40 (0.25)	0.66 (0.41)	0.90 (0.56)	1.20 (0.75)
400	0.42 (0.26)	0.76 (0.47)	1.08 (0.67)	1.53 (0.95)
600	0.43 (0.27)	0.79 (0.49)	1.16 (0.72)	1.70 (1.06)
800	0.43 (0.27)	0.80 (0.50)	1.20 (0.75)	1.80 (1.12)
1000	0.43 (0.27)	0.81 (0.50)	1.23 (0.76)	1.86 (1.15)
1200	0.44 (0.27)	0.82 (0.51)	1.24 (0.77)	1.91 (1.19)
1400	0.44 (0.28)	0.82 (0.51)	1.25 (0.78)	1.94 (1.20)
1600	0.44 (0.27)	0.83 (0.52)	1.26 (0.78)	1.97 (1.22)
1800	0.45 (0.28)	0.84 (0.52)	1.28 (0.79)	1.99 (1.24)
2000	0.46 (0.29)	0.85 (0.53)	1.29 (0.80)	2.02 (1.26)
2200	0.47 (0.29)	0.86 (0.53)	1.31 (0.81)	2.06 (1.28)
2400	0.48 (0.30)	0.89 (0.55)	1.34 (0.83)	2.10 (1.30)
2600	0.50 (0.31)	0.92 (0.57)	1.39 (0.86)	2.18 (1.35)
2800	0.53 (0.33)	0.97 (0.60)	1.47 (0.91)	2.29 (1.42)
3000	0.59 (0.37)	1.07 (0.66)	1.60 (0.99)	2.48 (1.54)
3200	0.71 (0.44)	1.26 (0.78)	1.87 (1.16)	2.86 (1.78)
3400	1.14 (0.71)	1.91 (1.19)	2.64 (1.64)	3.71 (2.30)
3600	4.07 (2.53)	4.31 (2.68)	4.65 (2.90)	5.30 (3.29)
3800	6.49 (4.03)	6.57 (4.08)	6.72 (4.18)	7.06 (4.39)
4000	8.22 (5.11)	8.27 (5.14)	8.36 (5.19)	8.58 (5.33)

NOTE: Between end-section lengths of 3,000 ft (914 m) for H88 loading.

TABLE 6—FREQUENCY ATTENUATION @ 68 °F (20 °C) NONLOADED EXCHANGE CABLES 83 NF/ MILE (52 NF/KM) AWG

Frequency (Hz)	Attenuation dB/mile (dB/km) AWG			
	19	22	24	26
200	0.58 (0.36)	0.82 (0.51)	1.03 (0.64)	1.30 (0.81)
400	0.81 (0.51)	1.15 (0.71)	1.45 (0.90)	1.84 (1.14)
600	0.98 (0.61)	1.41 (0.87)	1.77 (1.10)	2.26 (1.40)
800	1.13 (0.70)	1.62 (1.01)	2.04 (1.27)	2.60 (1.61)
1000	1.25 (0.78)	1.80 (1.12)	2.28 (1.42)	2.90 (1.80)
1200	1.36 (0.84)	1.97 (1.22)	2.50 (1.55)	3.17 (1.97)
1400	1.46 (0.91)	2.12 (1.32)	2.69 (1.67)	3.42 (2.12)
1600	1.55 (0.96)	2.26 (1.40)	2.87 (1.78)	3.65 (2.27)
1800	1.63 (1.01)	2.39 (1.48)	3.04 (1.89)	3.87 (2.40)
2000	1.71 (1.06)	2.51 (1.56)	3.20 (1.99)	4.08 (2.53)
2200	1.78 (1.11)	2.62 (1.63)	3.35 (2.08)	4.27 (2.65)
2400	1.85 (1.15)	2.73 (1.70)	3.49 (2.17)	4.45 (2.76)
2600	1.91 (1.19)	2.83 (1.76)	3.62 (2.25)	4.63 (2.88)
2800	1.97 (1.22)	2.93 (1.82)	3.75 (2.33)	4.80 (2.98)
3000	2.03 (1.26)	3.02 (1.88)	3.88 (2.41)	4.96 (3.08)
3200	2.08 (1.29)	3.11 (1.93)	4.00 (2.48)	5.12 (3.18)
3400	2.13 (1.32)	3.19 (1.98)	4.11 (2.55)	5.27 (3.27)
3600	2.18 (1.35)	3.28 (2.04)	4.22 (2.62)	5.41 (3.36)

TABLE 6—FREQUENCY ATTENUATION @ 68 °F (20 °C) NONLOADED EXCHANGE CABLES 83 NF/ MILE (52 NF/KM) AWG—Continued

Frequency (Hz)	Attenuation dB/mile (dB/km) AWG			
	19	22	24	26
3800	2.22 (1.38)	3.36 (2.09)	4.33 (2.69)	5.55 (3.45)
4000	2.27 (1.41)	3.43 (2.13)	4.43 (2.75)	5.69 (3.53)

(G) For loaded subscriber loops, the 1 kHz loss shall be approximately 0.45 dB per 100 ohms of measured dc loop resistance. This loss shall be the measured loss less the net gain of any voice frequency repeaters in the circuit. Testing shall also be conducted to verify that the loss increases gradually as the frequency increases. The loss on H88 loaded loops should be down only slightly at 2.8 kHz but drop rapidly above 2.8 kHz. The loss on D66 loaded loops shall be fairly constant to about 3.4 kHz and there shall be good response at 4.0 kHz. When voice frequency repeaters are in the circuit there will be some frequency weighting in the build-out network and the loss at the higher frequencies will be greater than for nonrepeatered loops.

(H) For nonloaded subscriber loops, the 1 kHz loss shall be approximately 0.9 dB per 100 ohms of measured dc loop resistance. Testing shall also be conducted to verify that the loss is approximately a straight line function with no abrupt changes. The 3 kHz loss should be approximately 70% higher than the 1 kHz loss.

(ii) *Noise*. The principal objective related to circuit noise (noise-metallic) and the acceptance of new plant is that circuit noise levels be 20 dBrnc or less (decibels above reference noise, C-message weighted (a weighting derived from listening tests, to indicate the relative annoyance or speech impairment by an interfering signal of frequency (f) as heard through a ''500-type'' telephone set)). For most new, properly installed, plant construction, circuit noise will usually be considerably less than 20 dBrnc unless there are unusually long sections of telephone plant in parallel with electric power facilities and/or power influence of paralleling electric facilities is abnormally high. When circuit noise is 20 dBrnc or less, the loop plant shall be considered acceptable. When measured circuit noise is greater than 20 dBrnc, loop plant shall still be considered acceptable providing circuit balance (power influence reading minus circuit noise readings) is 60 dB or greater and power influence readings are 85 dBrnc or greater. When circuit noise is greater than 20 dBrnc and circuit balance is less than 60 dB and/or power influence is less than 85 dBrnc, loop plant shall not be considered acceptable and the loop plant shall be remedied to make circuit balance equal to or greater than 60 dB.

(7) *Data record*. Measurement data shall be recorded. A suggested format similar to Format I for subscriber loops in §1755.407 or a format specified in the applicable construction contract may be used.

(8) *Probable causes for nonconformance*—(i) *Insertion loss*. Some of the more common causes for failing to obtain the desired results may be due to reversed load coil windings, missing load coils, bridge taps between load coils, load coil spacing irregularities, excessive end sections, cables having high or low mutual capacitance, load coils having the wrong inductance, load coils inadvertently installed in nonloaded loops, moisture or water in cable, split pairs, and improperly spliced connections. The above factors can occur singularly or in combination. Experience to date indicates that the most common problems are missing load coils, reversed load coil windings or bridge taps.

(ii) *Noise*. Some of the common causes for failing to obtain the desired results may be due to high power influence from paralleling electrical power systems, poor telephone circuit balance, discontinuous cable shields, inadequate bonding and grounding of cable shields, high capacitance unbalance-to-ground of the cable pairs, high dc loop resistance unbalance, dc loop current less than 20 milliamperes, etc. The

above factors can occur singularly or in combination. See TE&CM Section 451, Telephone Noise Measurement and Mitigation, for steps to be taken in reducing telecommunications line noise.

(f) *One-person open circuit measurement (subscriber loops).* (1) When specified by the borrower, open circuit measurements shall be made on all loaded and nonloaded subscriber loops upon completion of the cable work to verify that the plant is free from major impedance irregularities.

(2) For loaded loops, open circuit measurements shall be made using one of the following methods:

(i) Impedance or pulse return pattern, with cable pair trace compared to that of an artificial line of the same length and gauge. For best results, a level tracer or fault locator with dual trace capability is required;

(ii) Return loss using a level tracer, with cable pair compared to an artificial line of the same length and gauge connected in lieu of a Precision Balance Network (PBN). This method can be made with level tracers having only single trace capability; or

(iii) Open circuit structural return loss using a level tracer. This method can be made with level tracer having only single trace capability.

(3) Of the three methods suggested for loaded loops, the method specified in paragraph (f)(2)(ii) of this section is the preferred method because it can yield both qualitative and quantitative results. The methods specified in paragraphs (f)(2)(i) and (f)(2)(iii) of this section can be used as trouble shooting tools should irregularities be found during testing.

(4) For nonloaded loops, open circuit measurements shall be made using the method specified in paragraph (f)(2)(i) of this section.

(5) *Method of measurement.* Open circuit measurements shall be made at the CO on each loaded and nonloaded pair across the tip and ring terminals of the pair under test. All CO equipment shall be disconnected at the MDF for this test. For loaded loops containing voice frequency repeaters installed in the CO or field mounted, the open circuit measurement shall be made after the repeaters have been disconnected. Where field mounted repeaters are used, the open circuit measurement shall be made at the repeater location in both directions.

(i) *Impedance or pulse return pattern.* The step-by-step measurement procedure using the impedance or pulse return pattern for loaded and nonloaded loops shall be as shown in Figure 8. An artificial line of the same makeup as the cable to be tested shall be set up. The traces of the impedance or pulse return pattern from the cable pair and the artificial line shall be compared and should be essentially identical. If the impedance or pulse return traces from the cable pair are different than the artificial line trace, cable faults are possible. When the cable pair trace indicates possible defects, the defects should be identified and located. One method of identifying and locating defects involves introducing faults into the artificial line until its trace is identical with the cable trace.

(ii) *Return loss balanced to artificial line.* The step-by-step measurement procedure using the return loss balanced to artificial line for loaded loops shall be as shown in Figure 9. An artificial line of the same makeup as the cable to be tested shall be set up. The artificial line is connected to the external network terminals of the test set. The cable pair under test is compared to this standard. When defects are found, they should be identified and located by introducing faults into the artificial line. This is more difficult than with the method referenced in paragraph (f)(5)(i) of this section since this measurement is more sensitive to minor faults and only a single trace is used.

(iii) *Open circuit structural return loss using level tracer.* The step-by-step measurement procedure using the level tracer for loaded loops shall be as shown in Figure 10. The cable pair is compared to a PBN.

(6) *Test equipment.* Equipment for performing these tests is shown in Figures 8 through 10. For loaded loops, artificial loaded lines must be of the same gauge and loading scheme as the line under test. For nonloaded loops, artificial nonloaded lines must be of the same gauge as the line under test. Artificial lines should be arranged using

switches or other quick connect arrangements to speed testing and troubleshooting. Figures 8 through 10 are as follows:

FIGURE 8

ONE–PERSON OPEN CIRCUIT MEASUREMENT IMPEDANCE OR PULSE RETURN PATTERN

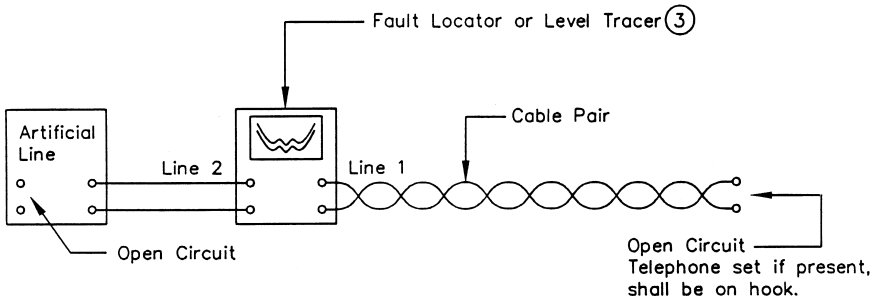

Measurement Procedure

1. Set up Artificial Line to same make–up [Length & Gauge(s)] as the cable pair.
2. Connect to test set (See Note (1)).
3. Connect cable pair to test set (See Note (1)).
4. Compare traces of Artificial Line and cable pair (2). They should be essentially identical. Differences indicate cable faults.
5. Location and type of fault may be determined by introducing faults in the Artificial Line until its trace is identical to that of the cable pair.

Notes:

(1.) Terminals to which cable pair and artificial line are attached shall be determined from the manufacturer's operating instructions. Proper settings for various switches and adjustments on the test set shall also be determined from the same source.

(2.) With test sets having trace storage capability only one set of terminals need be used. Connect Artificial Line to test set, store trace and disconnect line. Connect cable pair and compare trace to stored trace. To identify fault, store cable pair trace and connect Artificial Line. Introduce faults in the Artificial Line until traces are identical.

(3.) N.E.C.–17A, Biddle–CME110A–1, Dolcom–490, Tektronix–1503, Wilcom–T195, Wilcom–T132, or equivalent.

FIGURE 9

ONE–PERSON OPEN CIRCUIT MEASUREMENT
RETURN LOSS BALANCED TO ARTIFICIAL LINE

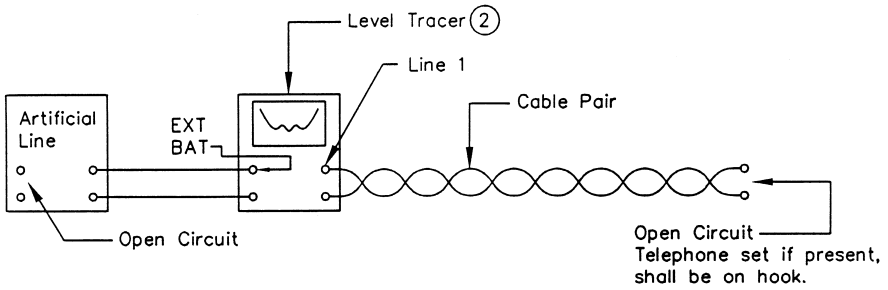

Measurement Procedure

1. Connect the test equipment and cable pair under test as shown above (See Note 1). Set up Artificial Line to same make–up [Length & Gauge(s)] as the cable pair.

2. Observe Return Loss from 200 to 3500 Hz (D66) or 200 to 3000 Hz (H88) noting maximum and minimum values. Note the value and frequency of the poorest (Lowest Numerical Value) SRL. (SRL becomes better as the readings become more negative). Record this value and frequency.

Notes:

(1.) Terminals to which cable pair and Artificial Line are attached shall be determined from the manufacturer's operating instructions. Proper settings for various switches and adjustments on the test set shall also be determined from the same source.

(2.) Wilcom–T132, Wilcom–T195, or equivalent.

FIGURE 10

ONE–PERSON OPEN CIRCUIT MEASUREMENT
STRUCTURAL RETURN LOSS USING LEVEL TRACER

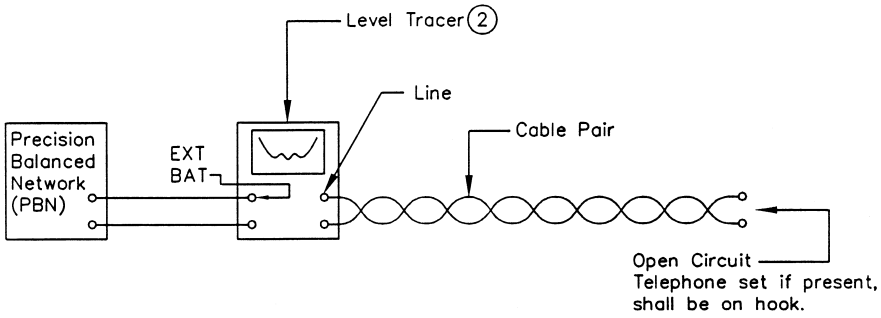

Measurement Procedure

1. Connect the test equipment and cable pair under test as shown above (See Note (1)). Set gauge of PBN for: Single Gauge – Same gauge as cable being measured; Mixed Gauge – Most predominant gauge adjacent to test set.

2. Observe Return Loss between 1000 and 3500 Hz (D66) or 1000 and 3000 Hz (H88) observing maximum and minimum values. Note the value and frequency of the poorest (Lowest Numerical Value) SRL. Single Gauge: Record this value. Mixed Gauge: Change gauge of PBN and note if SRL becomes better. (SRL becomes better as readings become more negative). If it does, record this value and frequency; if not, record value obtained with original gauge setting. (Varying gauge will be necessary, depending on actual cable layout, to obtain best SRL).

Notes:

(1) Terminals to which cable pair and Artificial Line are attached shall be determined from the manufacturer's operating instructions. Proper settings for various switches and adjustments on the test set shall also be determined from the same source.

(2) Wilcom–T132, Wilcom–T195, or equivalent.

(7) *Applicable results.* (i) For loaded and nonloaded loops, the two traces in the pulse return pattern or impedance method (paragraph (f)(5)(i) of this section) shall be essentially identical. The degree of comparison required of the two traces is to be determined by experience.

(ii) For loaded loops, results for return loss measurements using a level tracer, with artificial line, in lieu of a PBN (paragraph (f)(5)(ii) of this section) shall meet the following requirements:

(A) For D66 and H88 loaded cables the structural return loss (SRL) values shall range between 28 and 39 dB, respectively, at the critical frequency of structural return loss (CFSRL) within the pass band of the loading system being used. The minimum SRL value for uniform gauge shall be 25 dB CFSRL. These SRL values apply for loaded cables of uniform gauge for the

entire length of the subscriber loop circuit. Subscriber loop circuits shall meet the loading spacing deviations and the cable mutual capacitance requirements in the applicable RUS cable specifications;

(B) For mixed gauge loaded cables the SRL values shall be 25 and 27 dB CFSRL, respectively, and the minimum SRL value shall be 22 dB CFSRL; and

(C) The two traces in the pulse return pattern should be essentially identical. The degree of comparison required of the two traces is determined by experience.

(iii) For loaded loops, the results of open circuit structural return loss measurements using a level tracer (paragraph (f)(5)(iii) of this section) shall meet the following requirements. For D66 and H88 loaded cables with uniform or mixed gauges, the worst value allowed for measured open circuit structural return loss between 1,000–3,500 Hz and 1,000–3,000 Hz, respectively, shall be approximately 0.9 dB (round trip) for each 100 ohms outside plant dc loop resistance including the resistance of the load coils. The value of 0.9 dB per 100 ohms for the round trip loss remains reasonably accurate as long as:

(A) The subscriber end section of the loaded pair under test is approximately 2,250 ft (685 m) for D66 loading or 3,000 ft (914 m) for H88 loading in length; and

(B) The one-way 1,000 Hz loss does not exceed 10 dB.

(iv) For loaded loops, the measured value of open circuit structural return loss can only be as accurate as the degree to which the dc loop resistance of the loaded pair under test is known. Most accurate results shall be obtained when the dc loop resistance is known by actual measurements as described in paragraph (d) of this section. Furthermore, where the dc loop resistance is measured at the same time as the open circuit structural return loss, no correction for temperature is needed because the loss is directly proportional to the loop resistance. Where it is not practical to measure the dc loop resistance, it shall be calculated and corrected for temperature as specified in paragraph (d)(6)(ii) of this section. When measuring existing plant, care shall be taken to verify the accuracy of the records, if they are used for the calculation of the dc loop resistance. For buried plant, the temperature correction shall be based at the normal depth of the cable in the ground. (Temperature can be measured by boring a hole to cable depth with a ground rod, placing a thermometer in the ground at the cable depth, and taking and averaging several readings during the course of the resistance measurements.) For aerial cable it shall be based on the temperature inside the cable sheath.

(v) For loaded loops, the best correlation between the measured and the expected results shall be obtained when the cable is of one gauge, one size, and the far end section is approximately 2,250 ft (685 m) for D66 loading or 3,000 ft (914 m) for H88 loading. Mixing gauges and cable sizes will result in undesirable small reflections whose frequency characteristics and magnitude cannot be accurately predicted. In subscriber loop applications, cable gauge may be somewhat uniform but the cable pair size most likely will not be uniform as cable pair sizes taper off toward the customer access location and a downward adjustment of 1 dB of the allowed value shall be acceptable. ''Long'' end sections (as defined in TE&CM Section 424, ''Guideline for Telecommunications Subscriber Loop Plant'') lower the expected value, a further downward adjustment of 3 dB in the allowed value shall be acceptable.

(vi) For loaded loops, the limiting factor when making open circuit structural return loss measurements is when the 1,000 Hz one-way loss of the loaded cable pair under test becomes 10 dB or greater; it becomes difficult to detect the presence of irregularities beyond the 10 dB point on the loop. To overcome this difficulty, loaded loops having a one-way loss at 1,000 Hz greater than 10 dB shall be opened at some convenient point (such as a pedestal or ready access enclosure) and loss measurements at the individual portions measuring less than 10 dB one-way shall be made separately. When field mounted voice frequency repeaters are used, the measurement shall be made at the repeater location in both directions.

(8) *Data record.*(i) When performing a pulse return pattern or impedance open

circuit measurement on loaded and nonloaded loops, a ''check mark'' indicating that the pair tests good or an ''X'' indicating that the pair does not test good shall be recorded in the SRL column. A suggested format similar to Format I for subscriber loops in §1755.407 or a format specified in the applicable construction contract may be used.

(ii) When performing open circuit return loss measurements using the return loss balanced to an artificial line or return loss using a level tracer on loaded loops, the value of the poorest (lowest numerical value) SRL and its frequency in the proper column between 1,000 and 3,500 Hz for D66 loading or between 1,000 and 3,000 Hz for H88 loading shall be recorded. A suggested format similar to Format I for subscriber loops in §1755.407 or a format specified in the applicable construction contract may be used.

(9) *Probable causes for nonconformance.* Some of the more common causes for failing to obtain the desired results may be due to reversed load coil windings, missing load coils, bridge taps between load coils, load coil spacing irregularities, excessive end sections, cables having high or low mutual capacitance, load coils inadvertently installed in nonloaded loops, moisture or water in the cable, load coils having the wrong inductance, split pairs, and improperly spliced connectors. The above can occur singularly or in combination. Experience to date indicates that the most common problems are missing load coils, reversed load coil windings or bridge taps.

(g) *Cable insertion loss measurement (carrier frequencies).* (1) When specified by the borrower, carrier frequency insertion loss measurements shall be made on cable pairs used for T1, T1C, and/or station carrier systems. Carrier frequency insertion loss shall be made on a minimum of three pairs. Select at least one pair near the outside of the core unit layup. If the three measured pairs are within 10% of the calculated loss in dB corrected for temperature, no further testing is necessary. If any of the measured pairs of a section are not within 10% of the calculated loss in dB, all pairs in that section used for carrier transmission shall be measured.

(2) *Method of measurement.* The step-by-step method of measurement shall be as shown in Figure 11.

(3) *Test equipment.* The test equipment is shown in Figure 11 as follows:

FIGURE 11

CARRIER FREQUENCY INSERTION LOSS MEASUREMENT
CABLE FACILITIES

Measurement

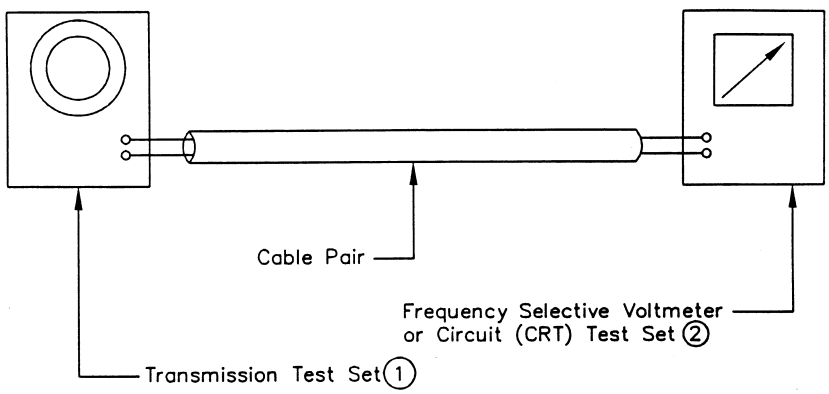

Measurement Procedure

1. Connect the transmission test set to one end of the length of cable to be measured and either the frequency selective voltmeter (FSVM) or CRT test set to the other end as shown.
2. Record the Insertion Loss in dB of the cable at each specified frequency.
3. The measured Insertion Loss of the cable should be within ± 10 percent of the calculated loss in dB when the loss is corrected for temperature.
4. Transmission test sets having an impedance between 100 and 135 ohms on the cable side are acceptable.

Notes:

1. H.P.–204B, H.P.–204C, H.P.–355, Siemens–W2057, or equivalent.
2. Wilcom–T136, Wilcom–T336, Wilcom–T337, Wilcom–T132B, Siemens–D2057, or equivalent.

(4) *Applicable results.* (i) The highest frequency to be measured is determined by the type of carrier system. For T1 type carrier, the highest frequency is normally 772 kHz. For T1C type carrier, the highest frequency is normally 1576 kHz. The highest frequency to be measured for station carrier is 140 kHz.

(ii) The measured insertion loss of the cable shall be within ±10% of the calculated loss in dB when the loss is corrected for temperature.

(iii) The calculated insertion loss is computed as follows:

(A) Multiply the length of each different gauge by the applicable dB per unit length as shown in Table 7 or 8 as follows:

TABLE 7—CABLE ATTENUATION @ 68 °F (20 °C) FILLED CABLES—SOLID INSULATION

Frequency (kHz)	Attenuation dB/mile (dB/km) Gauge (AWG)			
	19	22	24	26
10	2.8 (1.7)	4.8 (2.9)	6.4 (3.9)	8.5 (5.3)
20	3.2 (2.0)	5.8 (3.6)	8.2 (5.1)	11.2 (6.9)
40	3.6 (2.2)	6.5 (4.0)	9.6 (6.0)	13.9 (8.6)
60	4.0 (2.5)	6.9 (4.2)	10.3 (6.4)	15.2 (9.4)
80	4.5 (2.8)	7.3 (4.5)	10.7 (6.6)	16.0 (9.9)
100	4.9 (3.0)	7.7 (4.7)	11.1 (6.8)	16.5 (10.2)
112	5.2 (3.2)	8.0 (4.9)	11.3 (7.0)	16.8 (10.5)
120	5.4 (3.3)	8.1 (5.0)	11.5 (7.1)	17.0 (10.6)
140	5.8 (3.6)	8.6 (5.3)	11.9 (7.4)	17.4 (10.8)
160	6.2 (3.8)	9.0 (5.6)	12.3 (7.6)	17.8 (11.1)
180	6.6 (4.1)	9.5 (5.9)	12.7 (7.9)	18.2 (11.3)
200	7.0 (4.3)	10.0 (6.2)	13.2 (8.2)	18.6 (11.5)
300	8.7 (5.4)	12.2 (7.5)	15.4 (9.6)	20.6 (12.8)
400	10.0 (6.2)	14.1 (8.8)	17.7 (11.0)	22.9 (14.2)
500	11.2 (6.9)	15.9 (9.8)	19.8 (12.3)	25.2 (15.6)
600	12.2 (7.5)	17.5 (10.9)	21.8 (13.6)	27.4 (17.0)
700	13.2 (8.2)	19.0 (11.8)	23.6 (14.7)	29.6 (18.4)
772	13.8 (8.5)	19.9 (12.4)	24.8 (15.4)	31.4 (19.5)
800	14.2 (8.8)	20.1 (12.5)	27.4 (17.1)	31.7 (19.7)
900	14.8 (9.2)	21.6 (13.4)	29.0 (18.0)	33.8 (21.0)
1000	15.8 (9.8)	22.7 (14.1)	31.1 (19.3)	35.9 (22.3)
1100	16.4 (10.2)	23.8 (14.8)	32.7 (20.3)	38.0 (23.6)
1200	17.4 (10.8)	24.8 (15.4)	34.3 (21.3)	40.0 (24.9)
1300	17.9 (11.1)	25.9 (16.1)	35.4 (22.0)	41.7 (25.9)
1400	19.0 (11.8)	26.9 (16.7)	37.0 (23.0)	43.3 (26.9)
1500	19.5 (12.1)	28.0 (17.4)	38.0 (23.6)	44.3 (27.6)
1576	20.1 (12.4)	29.0 (18.0)	39.0 (24.3)	44.4 (28.2)

TABLE 8—CABLE ATTENUATION @ 68 °F (20 °C) FILLED CABLES—EXPANDED INSULATION

Frequency (kHz)	Attenuation dB/mile (dB/km) Gauge (AWG)			
	19	22	24	26
10	3.0 (1.8)	4.9 (3.0)	6.5 (4.0)	8.6 (5.3)
20	3.5 (2.1)	6.0 (4.1)	8.5 (5.2)	11.5 (7.1)
40	4.0 (2.5)	7.0 (4.3)	10.2 (6.3)	14.4 (8.9)
60	4.5 (2.8)	7.5 (4.6)	11.1 (6.8)	16.0 (9.9)
80	5.2 (3.3)	7.9 (4.9)	11.3 (6.9)	16.2 (10.1)
100	5.8 (3.6)	8.4 (5.2)	11.6 (7.2)	16.4 (10.2)
112	6.0 (3.8)	8.8 (5.4)	11.9 (7.4)	16.6 (10.3)
120	6.2 (3.9)	9.0 (5.6)	12.1 (7.5)	16.9 (10.5)
140	6.6 (4.1)	9.5 (5.9)	12.7 (7.9)	17.2 (10.7)
160	6.9 (4.3)	10.0 (6.2)	13.2 (8.2)	17.4 (10.8)
180	7.4 (4.6)	10.6 (6.6)	13.7 (8.5)	17.9 (11.1)
200	7.9 (4.9)	11.1 (6.9)	14.2 (8.8)	18.5 (11.5)
300	9.5 (5.9)	13.2 (8.2)	16.8 (10.5)	21.6 (13.4)
400	11.1 (6.9)	15.3 (9.5)	19.5 (12.1)	24.3 (15.1)
500	12.1 (7.5)	17.9 (11.1)	22.2 (13.8)	27.4 (17.1)
600	13.7 (8.5)	19.5 (12.1)	24.3 (15.1)	29.6 (18.4)
700	14.8 (9.2)	21.1 (13.1)	26.4 (16.4)	32.2 (20.0)
772	15.3 (9.5)	21.6 (13.4)	27.4 (17.1)	33.8 (21.90)
800	15.8 (9.8)	22.2 (13.8)	28.0 (17.4)	34.4 (21.3)
900	17.0 (10.5)	23.8 (14.8)	29.6 (18.4)	36.4 (22.6)
1000	17.4 (10.8)	24.8 (15.4)	31.1 (19.3)	38.5 (23.9)
1100	17.9 (11.1)	26.4 (16.4)	33.3 (20.7)	40.6 (25.3)
1200	19.0 (11.8)	27.4 (17.1	34.3 (21.3)	42.2 (26.2)
1300	19.5 (12.1)	28.5 (17.7)	35.9 (22.3)	43.8 (27.2)
1400	20.1 (12.5	29.6 (18.4)	37.0 (23.0)	45.9 (28.5)
1500	20.6 (12.8)	30.6 (19.0)	38.5 (23.9)	47.5 (29.5)
1576	21.6 (13.4)	31.1 (19.3)	39.1 (24.3)	48.6 (30.2)

(B) Add the individual losses for each gauge to give the total calculated insertion loss at a temperature of 68 °F (20 °C);

(C) Correct the total calculated insertion loss at the temperature of 68 °F (20 °C) to the measurement temperature by the following formulae:

$A_t = A_{68} \times [1 + 0.0012 \times (t - 68)]$ for English Units

$A_t = A_{20} \times [1 + 0.0022 \times (t - 20)]$ for Metric Units

Where:

A_t=Insertion loss at the measurement temperature in dB.

A_{68}=Insertion loss at a temperature of 68 °F in dB.

A_{20}=Insertion loss at a temperature of 20 °C in dB.

t=Measurement temperature in °F or (°C); and

(D) Compare the calculated insertion loss at the measurement temperature to the measured insertion loss to determine compliance with the requirement specified in paragraph (g)(4)(ii) of this section. (NOTE: Attenuation varies directly with temperature. For each ±10 °F (5.6 °C) change in temperature increase or decrease the attenuation by ±1%.)

(iv) If the measured value exceeds the ±10% allowable variation, the cause shall be determined and corrective action shall be taken to remedy the problem.

(5) *Data record*. Results of carrier frequency insertion loss measurements for station, T1, and/or T1C type carrier shall be recorded. Suggested formats similar to Format III, Outside Plant Acceptance Tests—T1 or T1C Carrier Pairs, and Format IV, Outside Plant Acceptance Tests—Station Carrier Pairs, in §1755.407 or formats specified in the applicable construction contract may be used.

(6) *Probable causes for nonconformance*. If the measured loss is low, the cable records are likely to be in error. If the measured loss is high, there may be bridge taps, load coils or voice frequency build-out capacitors connected to the cable pairs or the cable records may be in error. Figures 12 and 13 are examples that show the effects of bridge taps and load coils in the carrier path. Figures 12 and 13 are as follows:

FIGURE 12

EFFECTS OF BRIDGE TAPS ON ATTENUATION

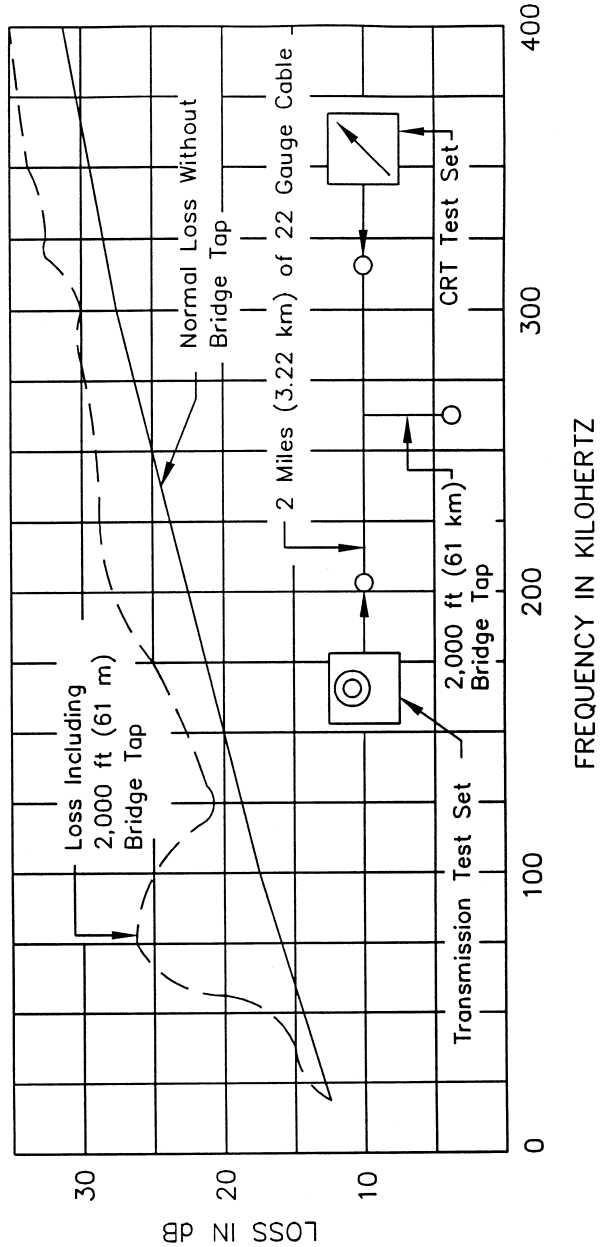

FIGURE 13
EFFECTS OF LOADING COILS ON ATTENUATION

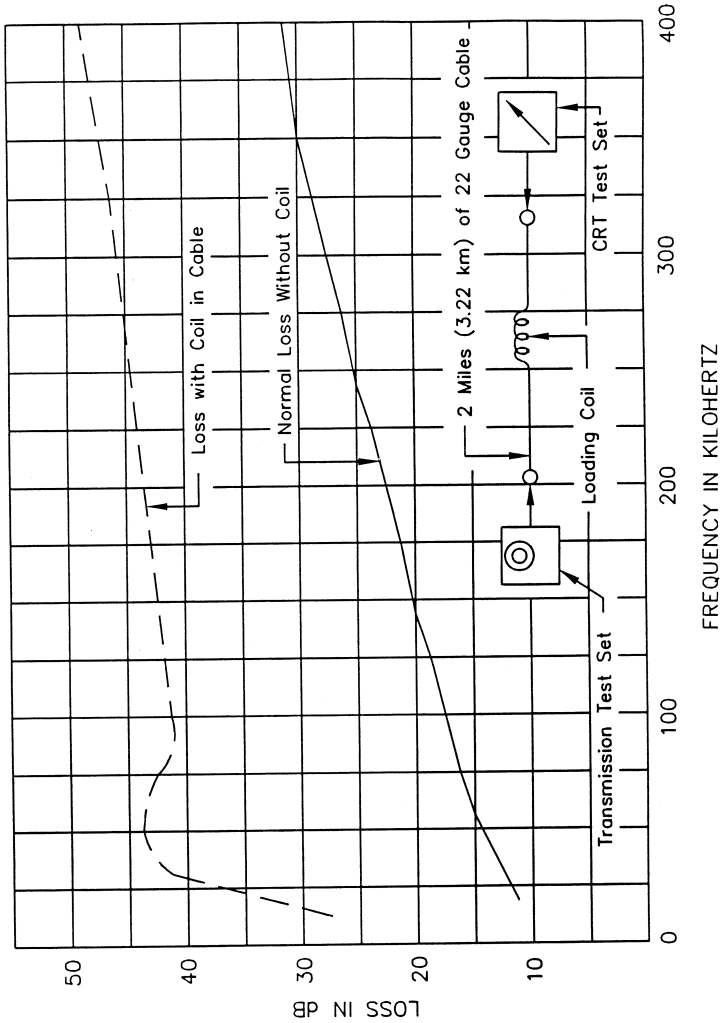

[62 FR 23962, May 2, 1997]

§ 1755.404 Fiber optic cable telecommunications plant measurements.

(a) *Armor continuity.* (1) Tests and measurements shall be made to ensure that the armor of fiber optic cables is continuous. There are two areas of concern. The first is armor bonding within a splice and the second is armor continuity between splices.

(2) Measurement techniques outlined here for verification of armor continuity are applicable to buried fiber optic cable plant. Measurements of armor continuity between splices in aerial, armored, fiber optic cable should be made prior to completion of splicing. Conclusive results cannot be obtained on aerial plant after all bonds have been completed to the supporting strand, multigrounded neutral, etc.

(3) *Method of measurement.* Armor continuity within splices shall be measured with a cable shield splice

continuity test set. The step-by-step measurement procedure outlined in the manufacturer's operating instructions for the specific test equipment being used shall be followed.

(4) *Test equipment*. A cable shield splice continuity tester shall be used to measure armor continuity within splices.

(5) *Applicable results*. When utilizing shield continuity testers to measure armor continuity within splices, refer to the manufacturer's published information covering the specific test equipment to be used and for anticipated results.

(6) *Data record*. Measurement data from armor continuity tests shall be recorded together with anticipated values in an appropriate format to permit comparison. The recorded data shall include specific location, cable size, and cable type, if known, etc.

(7) *Probable causes for nonconformance*. Among probable causes for nonconformance are broken or damaged armors, bad bonding harnesses, poorly connected bonding clamps, loose bonding lugs, etc.

(b) *Fiber optic splice loss measurement*. (1) After placement of all fiber optic cable plant has been completed and spliced together to form a continuous optical link between end termination points, splice loss measurements shall be performed on all field and central office splice points.

(2) *Method of measurement*. (i) Field splice loss measurements shall be made between the end termination points at 1310 and/or 1550 nanometers for single mode fibers and in accordance with Figure 14. Two splice loss measurements shall be made between the end termination points. The first measurement shall be from termination point A to termination point B. The second measurement shall be from termination point B to termination point A.

(ii) CO splice loss measurements shall be made at 1310 and/or 1550 nanometers for single mode fibers and in accordance with Figure 15. Two splice loss measurements shall be made between the end termination points. The first measurement shall be from termination point A to termination point B. The second measurement shall be from termination point B to termination point A.

(3) *Test equipment*. The test equipment is shown in Figures 14 and 15. The optical time domain reflectometer (OTDR) used for the testing should have dual wave length capability. Figures 14 and 15 are as follows:

FIGURE 14

FIBER OPTIC FIELD SPLICE LOSS MEASUREMENT

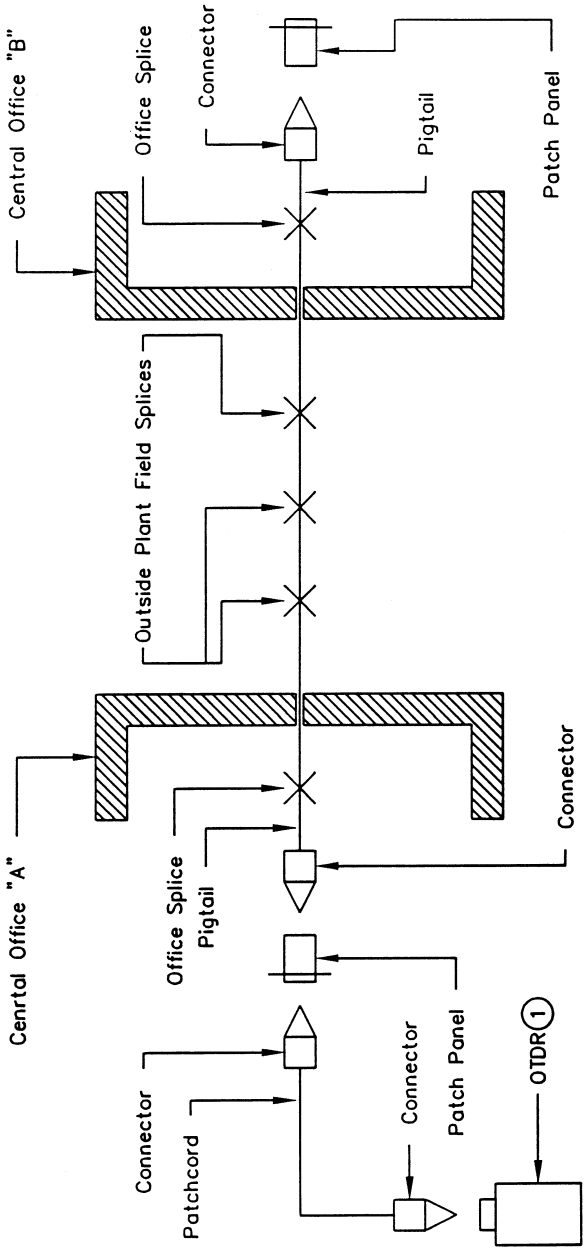

Note:

(1) Tektronix–TFP2, H.P.–8146A, Opto–Electronics–DFM10, Photo Kinetics–6000, or equivalent.

FIGURE 15
FIBER OPTIC CENTRAL OFFICE SPLICE LOSS MEASUREMENT

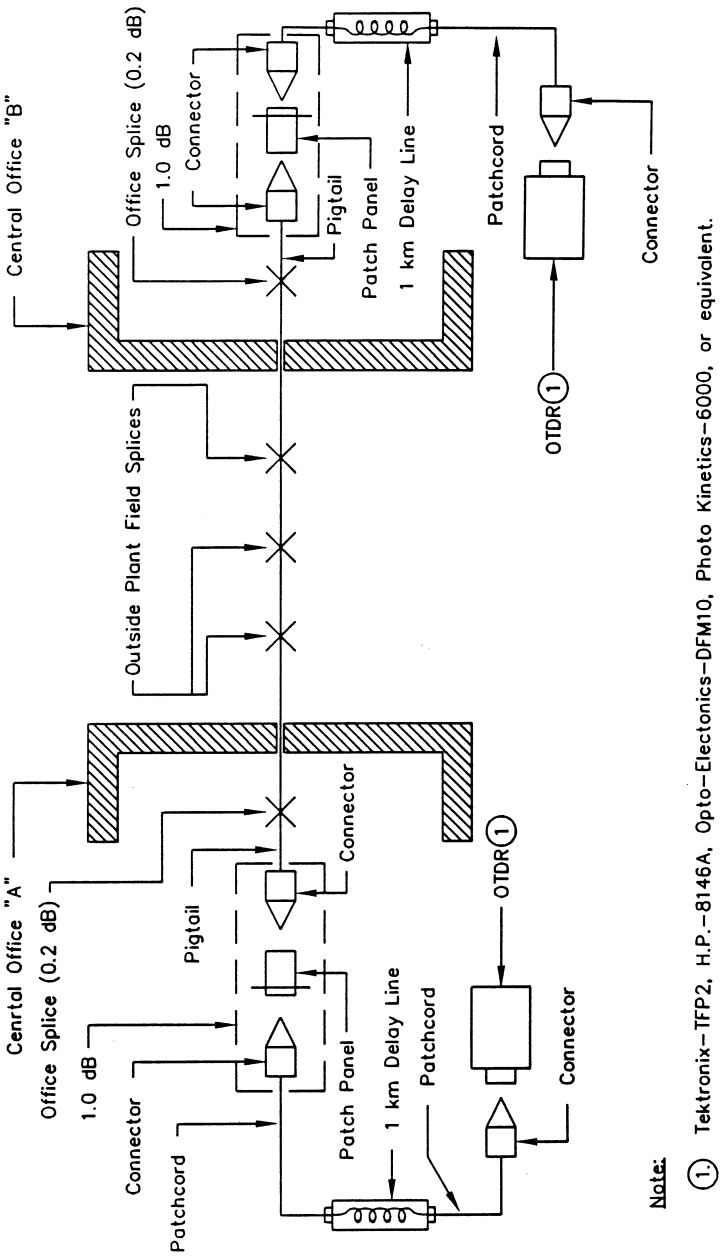

(4) *Applicable results.* (i) The splice loss for each single mode field splice shall be the bi-directional average of the two OTDR readings. To calculate the actual splice loss, substitute the OTDR readings maintaining the sign of the loss (+) or apparent gain (−) into the following equation:

$$\text{Actual Splice Loss (dB)} = \frac{\text{OTDR Reading From A to B} + \text{OTDR Reading From B to A}}{2}$$

(ii) When specified in the applicable construction contract, the splice loss of each field splice at 1310 and/or 1550 nanometers shall not exceed the limit specified in the contract.

(iii) When no limit is specified in the applicable construction contract, the splice loss of each field splice shall not exceed 0.2 dB at 1310 and/or 1550 nanometers.

(iv) The splice loss for each single mode CO splice shall be the bi-directional average of the two OTDR reading. To calculate actual splice loss, substitute the OTDR reading, maintaining the sign of the loss (+) or apparent gain (−), into the equation specified in paragraph (b)(4)(i) of this section.

(v) When specified in the applicable construction contract, the splice loss of each central office splice at 1310 and/or 1550 nanometers shall not exceed the limit specified in the contract.

(vi) When no limit is specified in the applicable construction contract, the splice loss of each central office splice shall not exceed 1.2 dB at 1310 and/or 1550 nanometers.

(5) *Data record.* The measurement data shall be recorded. A suggested format similar to Format V, Outside Plant Acceptance Test—Fiber Optic Telecommunications Plant, in § 1755.407 or a format specified in the applicable construction contract may be used.

(6) *Probable causes for nonconformance.* When the results of the splice loss measurements exceed the specified limits the following factors should be checked:

(i) Proper end preparation of the fibers;

(ii) End separation between the fiber ends;

(iii) Lateral misalignment of fiber cores;

(iv) Angular misalignment of fiber cores;

(v) Fresnel reflection;

(vi) Contamination between fiber ends;

(vii) Core deformation; or

(viii) Mode-field diameter mismatch.

(c) *End-to-end attenuation measurement.* (1) After placement of all fiber optic cable plant has been completed and spliced together to form a continuous optical link between end termination points, end-to-end attenuation measurements shall be performed on each optical fiber within the cable.

(2) *Method of measurement.* For single mode fibers, the end-to-end attenuation measurements of each optical fiber at 1310 and/or 1550 nanometers in each direction between end termination points shall be performed in accordance with Figure 16.

(3) *Test equipment.* The test equipment is shown in Figure 16 as follows:

FIGURE 16

END–TO–END FIBER OPTIC ATTENUATION MEASUREMENT SHOWING MEASUREMENT IN ONE DIRECTION ONLY (2)

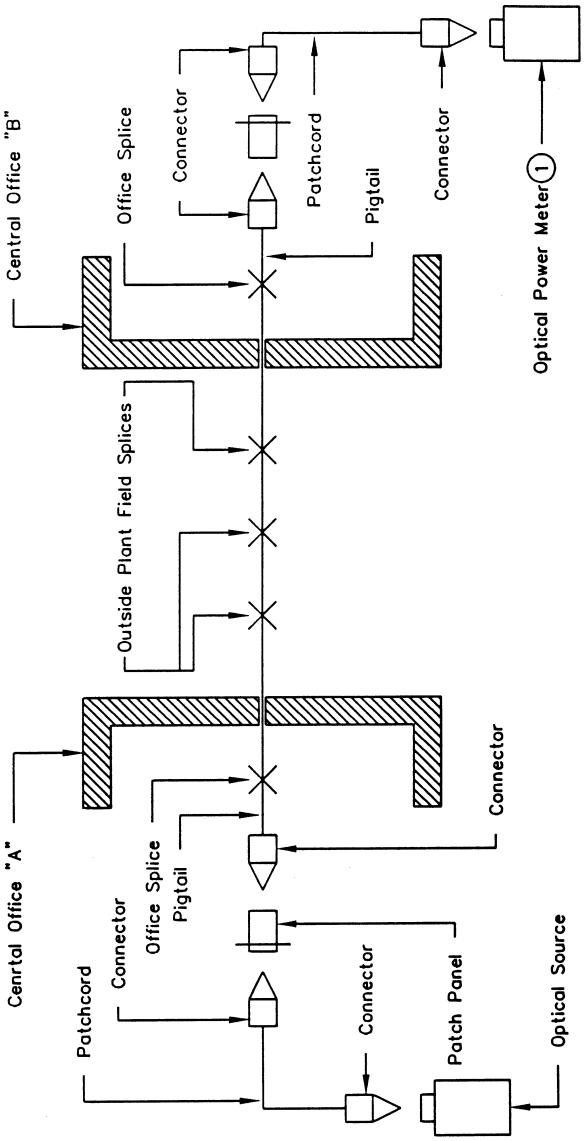

Notes:

(1) H.P.–8153A, Tektronix–OCP5002, Telecommunications Techniques Corp.–131, or equivalent.

(2) Measurement is repeated by reversing location of the optical source and optical power meter in the respective central offices.

(4) *Applicable results.* The end-to-end attenuation of each single mode optical fiber at 1310 and/or 1550 nanometers shall not exceed the limits specified in the applicable construction contract.

(5) *Data record.* The measurement data shall be recorded. A suggested format similar to Format V for fiber optic telecommunications plant in § 1755.407 or on a format specified in the applicable construction contract may be used.

(6) *Probable causes for nonconformance.* Failure of each optical fiber to meet the end-to-end attenuation limit could be attributed to the following:

(i) Excessive field or central office splice loss;

(ii) Excessive cable attenuation; or

(iii) Damage to the fiber optic cable during installation.

(d) *End-to-end fiber signature measurement.* (1) After placement of all fiber optic cable plant has been completed and spliced together to form a continuous optical link between end termination points, end-to-end fiber signature testing shall be performed on each optical fiber within the cable.

(2) *Method of measurement.* For single mode fibers, the end-to-end fiber signature measurement of each optical fiber in each direction shall be performed between end termination points at 1310 and/or 1550 nanometers in accordance with Figure 17.

(3) *Test equipment.* The test equipment is shown in Figure 17 as follows:

FIGURE 17

END–TO–END FIBER OPTIC SIGNATURE MEASUREMENT SHOWING MEASUREMENT IN ONE DIRECTION ONLY (2)

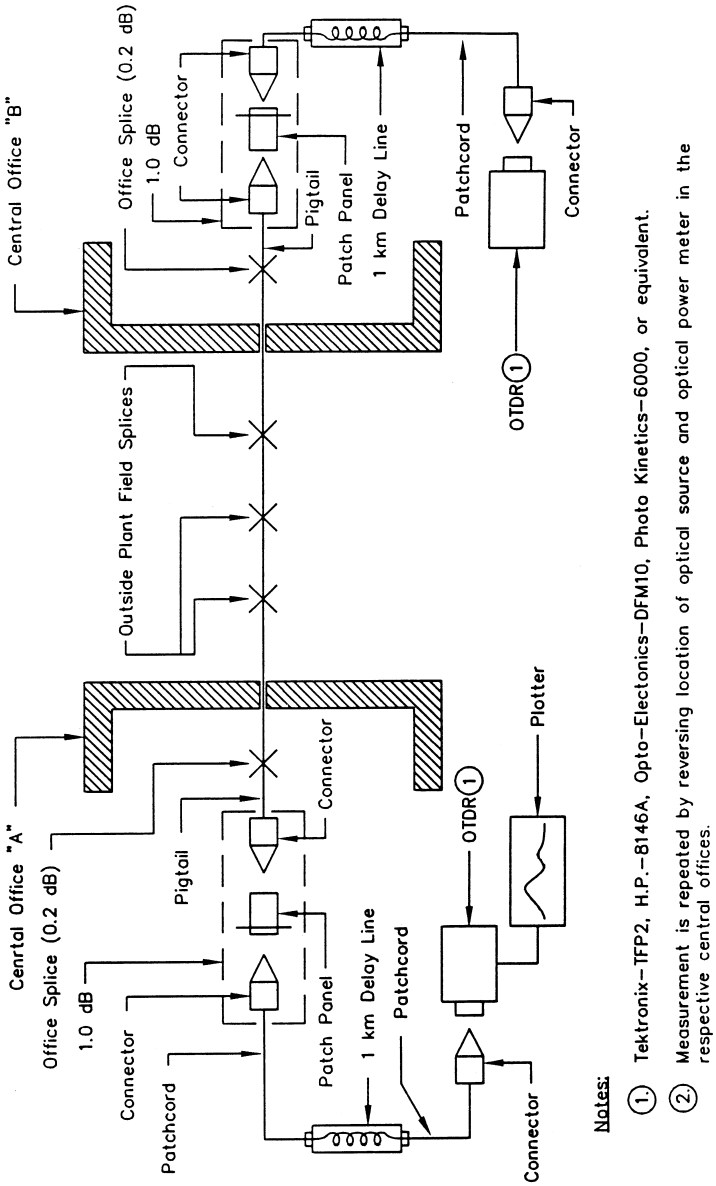

(4) *Applicable results*. The appearance of each optical fiber between end termination points.

(5) *Data record*. Plot the trace of each optical fiber and retain as a permanent record for future comparison if needed.

(6) *Probable causes for nonconformance*. None.

[62 FR 23989, May 2, 1997; 62 FR 25017, May 7, 1997]

§ 1755.405 Voiceband data transmission measurements.

(a) The data transmission measurements listed in this section shall be used to determine the acceptability of trunk and nonloaded subscriber loop circuits for data modem transmission.

(b) *Signal-to-C notched noise (S/CNN) measurement.* (1) When specified by the borrower, S/CNN measurements shall be made on trunk circuits and nonloaded subscriber loops. For trunk circuits, the measurement shall be made between CO locations. For nonloaded subscriber loops, the measurement shall be made from the CO to the station protector of the NID at the customer's access location.

(2) S/CNN is the logarithmic ratio expressed in dB of a 1,004 Hz holding tone signal compared to the C-message weighted noise level. S/CNN is one of the most important transmission parameters affecting the performance of data transmission because proper modem operation requires low noise relative to received power level. Since modulated carriers are used in data communication systems, noise measurements need to be performed with power on the connection to activate equipment having signal-level-dependent noise sources. For 4 kHz channels, a 1,004 Hz holding tone is used to activate the signal-dependent equipment on the channel or connection.

(3) *Method of measurement.* The S/CNN measurement shall be made using a 1,004 Hz holding tone at −13 dBm0 (decibels relative to one milliwatt, referred to a zero transmission level point) and performed in accordance with American National Standards Institute (ANSI) T1.506–1990, American National Standard for Telecommunications—Network Performance—Transmission Specifications for Switched Exchange Access Network including supplement ANSI T1.506a–1992, and American National Standards Institute/Institute of Electrical and Electronics Engineers (ANSI/IEEE) 743–1984, IEEE Standard Methods and Equipment for Measuring the Transmission Characteristics of Analog Voice Frequency Circuits. The ANSI T1.506–1990, American National Standard for Telecommunications—Network Performance—Transmission Specifications for Switched Exchange Access Network is incorporated by reference in accordance with 5 U.S.C. 522(a) and 1 CFR part 51. Copies of ANSI T1.506–1990 are available for inspection during normal business hours at RUS, room 2845, U.S. Department of Agriculture, STOP 1598, Washington, DC 20250–1598, or at the National Archives and Records Administration (NARA). For information on the availability of this material at NARA, call 202–741–6030, or go to: *http://www.archives.gov/federal_register/code_of_federal_regulations/ibr_locations.html.* Copies are available from ANSI, Customer Service, 11 West 42nd Street, New York, New York 10036, telephone number (212) 642–4900. The ANSI/IEEE 743–1984, IEEE Standard Methods and Equipment for Measuring the Transmission Characteristics of Analog Voice Frequency Circuits is incorporated by reference in accordance with 5 U.S.C. 522(a) and 1 CFR part 51. Copies of ANSI/IEEE 743–1984 are available for inspection during normal business hours at RUS, room 2845, U.S. Department of Agriculture, STOP 1598, Washington, DC 20250–1598, or at the National Archives and Records Administration. Copies are available from ANSI, Customer Service, 11 West 42nd Street, New York, New York 10036, telephone number (212) 642–4900.

(4) *Test equipment.* The equipment for performing the measurement shall be in accordance with ANSI/IEEE 743–1984.

(5) *Applicable results.* The S/CNN for both trunk and nonloaded subscriber loop circuits shall not be less than 31 dB.

(6) *Data record.* The measurement data shall be recorded. Suggested formats similar to Format VI, Voiceband Data Transmission Tests—Nonloaded Subscriber Loops, and Format VII, Voiceband Data Transmission Tests—Trunk Circuits, in § 1755.407 or formats specified in the applicable construction contract may be used.

(7) *Probable causes for nonconformance.* Some of the causes for failing to obtain the desired results may be due to excessive harmonic distortion, quantizing noise, phase and amplitude jitter, and loss in digital pads used for level settings.

(c) *Signal-to-intermodulation distortion (S/IMD) measurement.* (1) When specified

by the borrower, S/IMD measurements shall be made on trunk circuits and nonloaded subscriber loops. For trunk circuits, the measurement shall be made between CO locations. For nonloaded subscriber loops, the measurement shall be made from the CO to the station protector of the NID at the customer's access location.

(2) S/IMD is a measure of the distortion produced by extraneous frequency cross products, known as intermodulation products, when a multi-tone tone signal is applied to a system.

(3) Intermodulation distortion (IMD) is caused by system nonlinearities acting upon the harmonic frequencies produced from an input of multiple tones. The products resulting from IMD can be more damaging than noise in terms of producing data transmission errors.

(4) IMD is measured as a signal to distortion ratio and is expressed as the logarithmic ratio in dB of the composite power of four resulting test frequencies to the total power of specific higher order distortion products that are produced. The higher order products are measured at both the 2nd order and 3rd order and are designated R2 and R3, respectively. The four frequency testing for IMD is produced with four tones of 857, 863, 1,372, and 1,388 Hz input at a composite power level of −13 dBm0.

(5) *Method of measurement*. The S/IMD measurement shall be performed in accordance with ANSI T1.506–1990 and ANSI/IEEE 743–1984.

(6) *Test equipment*. The equipment for performing the measurement shall be in accordance with ANSI/IEEE 743–1984.

(7) *Applicable results*. The 2nd order (R2) S/IMD for both trunk and nonloaded subscriber loop circuits shall not be less than 40 dB. The 3rd order (R3) S/IMD for both trunk and nonloaded subscriber loop circuits shall not be less than 40 dB.

(8) *Data record*. The measurement data shall be recorded. Suggested formats similar to Format VI for nonloaded subscriber loops and Format VII for trunk circuits in §1755.407 or formats specified in the applicable construction contract may be used.

(9) *Probable causes for nonconformance*. Some of the causes for failing to obtain the desired results may be due to channel nonlinearities, such as compression and clipping, which cause harmonic and intermodulation distortion in a voiceband signal.

(d) *Envelope delay distortion (EDD) measurement*. (1) When specified by the borrower, EDD measurements shall be made on trunk circuits and nonloaded subscriber loops. For trunk circuits, the measurement shall be made between CO locations. For nonloaded subscriber loops, the measurement shall be made from the CO to the station protector of the NID at the customer's access location.

(2) EDD is a measure of the linearity or uniformity of the phase versus frequency characteristics of a transmission facility. EDD is also known as relative envelope delay (RED).

(3) EDD is specifically defined as the delay relative to the envelope delay at the reference frequency of 1,704 Hz. EDD is typically measured at two frequencies, one low and one high in the voiceband. The low frequency measurement is made at 604 Hz. The high frequency measurement is made at 2,804 Hz.

(4) *Method of measurement*. The EDD measurement shall be performed in accordance with ANSI T1.506–1990 and ANSI/IEEE 743–1984.

(5) *Test equipment*. The equipment for performing the measurement shall be in accordance with ANSI/IEEE 743–1984.

(6) *Applicable results*. The EDD for both trunk and nonloaded subscriber loop circuits at the low frequency of 604 Hz shall not exceed 1,500 microseconds. The EDD for both trunk and nonloaded subscriber loop circuits at the high frequency of 2,804 Hz shall not exceed 1,000 microseconds.

(7) *Data record*. The measurement data shall be recorded. Suggested formats similar to Format VI for nonloaded subscriber loops and Format VII for trunk circuits in §1755.407 or formats specified in the applicable construction contract may be used.

(8) *Probable causes for nonconformance*. Some of the causes for failing to obtain the desired results may be due to nonlinearity of the phase versus frequency

characteristic of the transmission facility. This nonlinear phase versus frequency characteristic of the transmission facility causes the various frequency components to travel at different transit times which results in successively transmitted data pulses to overlap at the receive end. The overlapping of the pulses at the receive end results in distortion of the received signal. Excessive EDD on the transmission facility may be reduced using data modems with equalization or by conditioning the transmission line.

(e) *Amplitude jitter (AJ) measurement.* (1) When specified by the borrower, AJ measurements shall be made on trunk circuits and nonloaded subscriber loops. For trunk circuits, the measurement shall be made between CO locations. For nonloaded subscriber loops, the measurement shall be made from the CO to the station protector of the NID at the customer's access location.

(2) AJ is any fluctuation in the peak amplitude value of a fixed tone signal at 1,004 Hz from its nominal value. AJ is expressed in peak percent amplitude modulation.

(3) AJ is measured in two separate frequency bands, 4–300 Hz and 20–300 Hz. The 4–300 Hz band is important for modems employing echo canceling capabilities. The 20–300 Hz band is used for modems that do not employ echo cancelers.

(4) Amplitude modulation can affect the error performance of voiceband data modems. The measurement of amplitude jitter indicates the total effect on the amplitude of the holding tone of incidental amplitude modulation and other sources including quantizing and message noise, impulse noise, gain hits, phase jitter, and additive tones such as single-frequency interference.

(5) *Method of measurement.* The AJ measurement shall be performed in accordance with ANSI T1.506–1990 and ANSI/IEEE 743–1984.

(6) *Test equipment.* The equipment for performing the measurement shall be in accordance with ANSI/IEEE 743–1984.

(7) *Applicable results.* The AJ for both trunk and nonloaded subscriber loop circuits in the 4–300 Hz frequency band shall not exceed 6%. The AJ for both trunk and nonloaded subscriber loop circuits in the 20–300 Hz frequency band shall not exceed 5%.

(8) *Data record.* The measurement data shall be recorded. Suggested formats similar to Format VI for nonloaded subscriber loops and Format VII for trunk circuits in § 1755.407 or formats specified in the applicable construction contract may be used.

(9) *Probable causes for nonconformance.* Some of the causes for failing to obtain the desired results may be due to excessive S/CNN, impulse noise, and phase jitter.

(f) *Phase jitter (PJ) measurement.* (1) When specified by the borrower, PJ measurements shall be made on trunk circuits and nonloaded subscriber loops. For trunk circuits, the measurement shall be made between CO locations. For nonloaded subscriber loops, the measurement shall be made from the CO to the station protector of the NID at the customer's access location.

(2) PJ is any fluctuation in the zero crossings of a fixed tone signal (usually 1,004 Hz) from their nominal position in time within the voiceband. PJ is expressed in terms of either degrees peak-to-peak (° p-p) or in terms of a Unit Interval (UI). One UI is equal to 360° p-p.

(3) PJ measurements are typically performed in two nominal frequency bands. The frequency bands are 20–300 Hz band and either the 2–300 Hz band or the 4–300 Hz band. The 20–300 Hz band is important to all phase-detecting modems. The 4–300 Hz band or the 2–300 Hz band is important for modems employing echo canceling capabilities.

(4) Phase jitter can affect the error performance of voiceband data modems that use phase detection techniques. The measurement of phase jitter indicates the total effect on the holding tone of incidental phase modulation and other sources including quantizing and message noise, impulse noise, phase hits, additive tones such as single-frequency interference, and digital timing jitter.

(5) *Method of measurement.* The PJ measurement shall be performed in accordance with ANSI T1.506–1990 and ANSI/IEEE 743–1984.

(6) *Test equipment.* The equipment for performing the measurement shall be in accordance with ANSI/IEEE 743–1984.

(7) *Applicable results*. The PJ for both trunk and nonloaded subscriber loop circuits in the 4–300 Hz frequency band shall not exceed 6.5° p-p. The PJ for both trunk and nonloaded subscriber loop circuits in the 20–300 Hz frequency band shall not exceed 10.0° p-p.

(8) *Data record*. The measurement data shall be recorded. Suggested formats similar to Format VI for nonloaded subscriber loops and Format VII for trunk circuits in § 1755.407 or formats specified in the applicable construction contract may be used.

(9) *Probable causes for nonconformance*. Some of the causes for failing to obtain the desired results may be due to excessive S/CNN, impulse noise, and amplitude jitter.

(g) *Impulse noise measurement*. (1) When specified by the borrower, impulse noise measurements shall be made on trunk circuits and nonloaded subscriber loops. For trunk circuits, the measurement shall be made between CO locations. For nonloaded subscriber loops, the measurement shall be made from the CO to the station protector of the NID at the customer's access location.

(2) Impulse noise is a measure of the presence of unusually large noise excursions of short duration that are beyond the normal background noise levels on a facility. Impulse noise is typically measured by counting the number of occurrences beyond a particular noise reference threshold in a given time interval. The noise reference level is C-message weighted.

(3) *Method of measurement*. The impulse noise measurement shall be performed using a 1,004 Hz tone at –13 dBm0 and in accordance with ANSI T1.506–1990 and ANSI/IEEE 743–1984.

(4) *Test equipment*. The equipment for performing the measurement shall be in accordance with ANSI/IEEE 743–1984.

(5) *Applicable results*. The impulse noise for both trunk and nonloaded subscriber loop circuits shall not exceed 65 dBrnC0 (decibels relative to one picowatt reference noise level, measured with C-message frequency weighting, referred to a zero transmission level point). The impulse noise requirement shall be based upon a maximum of 5 counts in a 5 minute period at equal to or greater than the indicated noise thresholds.

(6) *Data record*. The measurement data shall be recorded. Suggested formats similar to Format VI for nonloaded subscriber loops and Format VII for trunk circuits in § 1755.407 or formats specified in the applicable construction contract may be used.

(7) *Probable causes for nonconformance*. Some of the causes for failing to obtain the desired results may be due to excessive transient signals originating from the various switching operations.

[62 FR 23996, May 2, 1997, as amended at 69 FR 18803, Apr. 9, 2004]

§ 1755.406 Shield or armor ground resistance measurements.

(a) Shield or armor ground resistance measurements shall be made on completed lengths of copper cable and wire plant and fiber optic cable plant.

(b) *Method of measurement*. (1) The shield or armor ground resistance measurement shall be made between the copper cable and wire shield and ground and between the fiber optic cable armor and ground, respectively. The measurement shall be made either on cable and wire lengths before splicing and before any ground connections are made to the cable or wire shields or armors. Optionally, the measurement may be made on cable and wire lengths after splicing, but all ground connections must be removed from the section under test.

(2) The method of measurement using either an insulation resistance test set or a dc bridge type megohmmeter shall be as shown in Figure 18 as follows:

FIGURE 18

SHIELD OR ARMOR GROUND RESISTANCE MEASUREMENT

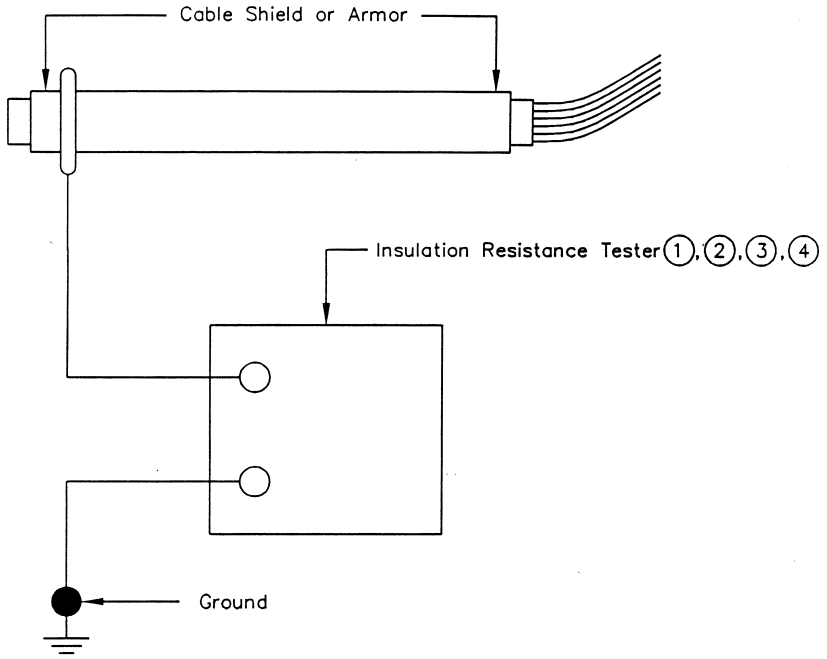

Notes:

(1.) For hand cranked or battery operated Insulation Resistance Testers, the output voltage should not exceed 500 volts dc.

(2.) For dc bridge type Megohmmeters, the voltage applied to the shield or armor under test should not be less than 250 volts dc nor greater than 1000 volts dc when using instruments having adjustable test voltage levels.

(3.) When the distance between test points results in a measurement beyond the range of the test equipment, extended range devices recommended by the test equipment manufacturer may be used to assist in making the measurement.

(4.) Biddle CO.–Model BM 200, Associate Research–Model 263, General Radio–1864 Megohm Meter, or equivalent.

(c) *Test equipment.* (1) The shield or armor ground resistance measurements may be made using an insulation resistance test set, a dc bridge type megohmmeter, or a commercially available fault locator.

(2) The insulation resistance test set should have an output voltage not to exceed 500 volts dc and may be hand cranked or battery operated.

(3) The dc bridge type megohmmeter, which may be ac powered, should have

scales and multipliers which make it possible to accurately read resistance values of 50,000 ohms to 10 megohms. The voltage that is applied to the shield or armor during the test should not be less than ''250 volts dc'' nor greater than ''1,000 volts dc'' when using an instrument having adjustable test voltage levels.

(4) Commercially available fault locators may be used in lieu of the above equipment, if the devices are capable of detecting faults having resistance values of 50,000 ohms to 10 megohms. Operation of the devices and method of locating the faults should be in accordance with manufacturer's instructions.

(d) *Applicable results.* (1) For all new copper cable and wire facilities and all new fiber optic cable facilities, the shield or armor ground resistance levels normally exceed 1 megohm-mile (1.6 megohm-km) at 68 °F (20 °C). A value of 100,000 ohm-mile (161,000 ohm-km) at 68 °F (20 °C) shall be the minimum acceptable value of the shield or armor ground resistance.

(2) Shield or armor ground resistance varies inversely with length and temperature. In addition other factors which may affect readings could be soil conditions, faulty test equipment and incorrect test procedures.

(3) For the resistance test method and dc bridge type megohmmeter, the ohm-mile (ohm-km) value for the shield or armor ground resistance shall be computed by multiplying the actual scale reading in ohms on the test set by the length in miles (km) of the cable or wire under test.

(4)(i) The objective shield or armor ground resistance may be determined by dividing 100,000 by the length in miles (161,000 by the length in km) of the cable or wire under test. The resulting value is the minimum acceptable meter scale reading in ohms. Examples for paragraphs (d)(3) and (d)(4) of this section are as follows:

Equation 1. Test Set: Scale Reading * Length = Resistance-Length

75,000 ohms * 3 miles = 225,000 ohm-mile

(75,000 ohms * 4.9 km = 367,000 ohm-km)

Equation 2. 100,000 ohm-mile ÷ Length = Minimum Acceptable Meter Scale Reading

100,000 ohm-mile ÷ 3 miles = 33,333 ohms

(161,000 ohm-km ÷ 4.9 km = 32,857 ohms)

(ii) Since the 33,333 ohms (32,857 ohms) is the minimum acceptable meter scale reading and the meter scale reading was 75,000 ohms, the cable is considered to have met the 100,000 ohm-mile (161,000 ohm-km) requirement.

(5) Due to the differences between various jacketing materials used in manufacturing cable or wire and to varying soil conditions, it is impractical to provide simple factors to predict the magnitude of variation in shield or armor to ground resistance due to temperature. The variations can, however, be substantial for wide excursions in temperature from the ambient temperature of 68 °F (20 °C).

(e) *Data record.* The data shall be corrected to the length requirement of ohm-mile (ohm-km) and a temperature of 68 °F (20 °C) and shall be recorded on a form specified in the applicable construction contract.

(f) *Probable causes for nonconformance.* (1) When results of resistance measurements are below the 100,000 ohm-mile (161,000 ohm-km) requirement at 68 °F (20 °C), the jacket temperature, soil conditions, test equipment and method shall be reviewed before the cable or wire is considered a failure. If the temperature is approximately 68 °F (20 °C) and soil conditions are acceptable, and a reading of less than 100,000 ohm-mile (161,000 ohm-km) is indicated, check the calibration of the equipment; as well as, the test method. If the equipment was found to be out of calibration, recalibrate the equipment and remeasure the cable or wire. If the temperature was 86 °F (30 °C) or higher, the cable or wire shall be remeasured at a time when the temperature is approximately 68 °F (20 °C). If the test was performed in unusually wet soil, the cable or wire shall be retested after the soil has reached normal conditions. If after completion of the above steps, the resistance value of 100,000 ohm-mile (161,000 ohm-km) or greater is obtained, the cable or wire shall be considered acceptable.

(2) When the resistance value of the cable or wire is still found to be below 100,000 ohm-mile (161,000 ohm-km) requirement after completion of the steps listed in paragraph (f)(1) of this

section, the fault shall be isolated by performing shield or armor ground resistance measurements on individual cable or wire sections.

(3) Once the fault or faults have been isolated, the cable or wire jacket shall be repaired in accordance with § 1755.200, RUS Standard for Splicing Copper and Fiber Optic Cables or the entire cable or wire section may be replaced at the request of the borrower.

[62 FR 23998, May 2, 1997]

§ 1755.407 Data formats.

The following suggested formats listed in this section may be used for recording the test data:

FORMAT I

OUTSIDE PLANT ACCEPTANCE TESTS – SUBSCRIBER LOOPS

PROJECT: _____ Date of Test: _____

CO NAME OF LOCATION: _____ Time Measured: _____ Tester (Contractor): _____

CO or RST GROUND RESISTANCE: _____ Ohms (Before tying to elect. neutral) Temperature: _____ Tester (Engineer): _____

CO or RST GROUND RESISTANCE: _____ Ohms (After tying to elect. neutral) Soil Type: _____ Tester (Borrower): _____

Test Equip.: _____ Moisture Content of Soil: _____

Route No.	Pair No.	Length (Miles or km)	DC Insul. Resist. (Megohms)			DC Loop Resist. (Ohms)			Measd. DC Res. Unbal. (Ohms)	Open Ckt Meas. Type (a,b,c,d)		Insertion Loss at kHz Shown					Line Noise			
			T–GD	R–GD	Min. Permit	Comp. 68°F (20°C)	Measd. °F (___°C)	Corr. 68°F (20°C)		SRL (dB)	Freq. (kHz)	1.0	1.7	2.3	2.8	3.4	4.0	NMC	NG–C	NGF	Bal.

Shield or Shield/Armor Continuity Data has been attached. Yes ___ No___

FORMAT II

OUTSIDE PLANT ACCEPTANCE TESTS – TRUNKS CIRCUITS

PROJECT: _____ Date of Test: _____

CO NAME OF LOCATION: _____ Tester (Contractor): _____

OFFICE A: _____ Tester (Engineer): _____

OFFICE B: _____ Tester (Borrower): _____

ELECTRONIC EQUIPMENT GROUND RESISTANCE: _____ Ohms

Time Measured: _____ Soil Type: _____ Test Equip: _____

Temperature: _____ Moisture Content of Soil: _____

In the space below show in a simple line diagram the facility makeup including all gauges, lengths, cable types, and repeater locations if any.

Trunk No.	Pair No. Off. A	Pair No. Off. B	Length Miles or km	DC Insul. Resist. (Megohms)			DC Loop Resist. (Ohms)			Measd DC Res. Unbal. (Ohms)
				T–GD	R–GD	Min. Permit	Comp. 68°F (20°C)	Measd. ___°F (___°C)	Corr. 68°F (20°C)	

FORMAT III

OUTSIDE PLANT ACCEPTANCE TESTS – T1 or T1C CARRIER PAIRS

PROJECT: _____ Type of Proposed Carrier: _____ (Trunk – Subscriber)

LOCATION: From _____ (CO Name) to _____ (CO Name) Shield or Shield/Armor Continuity has been checked: _____

Aerial: _____ Buried: _____ Weather: _____ Temp.: _____ Date: _____ Sheet ____ of ____

CARRIER FREQUENCY INSERTION LOSS MEASUREMENTS (1)

From_____ to_____					From_____ to_____				
Freq (2) (kHz)	Send Level (dBm)	Receive Level(dBm)	Measured Loss(dB)	Estimated (3) Loss (dB)	Freq (2) (kHz)	Send Level (dBm)	Receive Level(dBm)	Measured Loss(dB)	Estimated (3) Loss (dB)
20					20				
60					60				
100					100				
140					140				
180					180				
200					200				
300					300				
400					400				
600					600				
700					700				
772					772				
800					800				
1000					1000				
1200					1200				
1300					1300				
1400					1400				
1500					1500				
1576					1576				

Notes: (1) Refer to RUS TE&CM 925 on How to Make Measurements. (2) Go as high in frequency as required by contract.
(3) From either Table 7 or 8 in Paragraph (g)(4)(iii)(A) of Section 1755.403; Correct loss for temperature.

FORMAT IV

OUTSIDE PLANT ACCEPTANCE TESTS – STATION CARRIER PAIRS

PROJECT: _____ Type of Proposed Carrier: _____ (Trunk – Subscriber)

LOCATION: From _____ (CO Name) to _____ (Sub.) Shield or Shield/Armor Continuity has been checked: _____

Aerial: _____ Buried: _____ Weather: _____ Temp.: _____ Date: _____ Sheet ____ of ____

CARRIER FREQUENCY INSERTION LOSS MEASUREMENTS (1)

From_____ to_____					From_____ to_____				
Freq. (kHz)	Send Level (dBm)	Receive Level(dBm)	Measured Loss(dB)	Estimated (2) Loss (dB)	Freq. (kHz)	Send Level (dBm)	Receive Level(dBm)	Measured Loss(dB)	Estimated (2) Loss (dB)
20					20				
60					60				
100					100				
112					112				
140					140				

From_____ to_____					From_____ to_____				
Freq. (kHz)	Send Level (dBm)	Receive Level(dBm)	Measured Loss(dB)	Estimated (2) Loss (dB)	Freq. (kHz)	Send Level (dBm)	Receive Level(dBm)	Measured Loss(dB)	Estimated (2) Loss (dB)
20					20				
60					60				
100					100				
112					112				
140					140				

Notes:

(1) Refer to RUS TE&CM 925 on How to Make Measurements.

(2) From either Table 7 or 8 in Paragraph (g)(4)(iii)(A) of Section 1755.403; correct loss for temperature.

FORMAT V

OUTSIDE PLANT ACCEPTANCE TESTS

FIBER OPTIC TELECOMMUNICATIONS PLANT

PROJECT: _____ Date of Test: _____

TERMINATION POINT A: _____ Tester (Contractor): _____

TERMINATION POINT B: _____ Tester (Engineer): _____

Time Measured: _____ Tester (Borrower): _____

Temperature: _____ Test Equip: _____

Soil Type: _____ Moisture Content of Soil: _____

Route No.	Fiber No.	Length Miles or km	Splice Loss (dB)		End-to-End Attenuation (dB/km)	End-to-End Fiber Signature	
			FIELD	CO		Yes	No

Armor Continuity Data has been attached. Yes ___ No ___

FORMAT VI

VOICEBAND DATA TRANSMISSION TESTS – NONLOADED SUBSCRIBER LOOPS

PROJECT: _____

LOCATION: From _____ (CO Name) to _____ (Sub. Name)

TEMPERATURE: _____ DATE: _____

AERIAL: _____

BURIED: _____

UNDERGROUND: _____

Date of Test: _____

Tester (Contractor): _____

Tester (Engineer): _____

Tester (Borrower): _____

Test Equip.: _____ Sheet ____ of ____

Route No.	Pair No.	Length (Miles or km)	S/CNN 1,004 Hz Tone at −13 dBm0 (dB)	S/IMD (dB)		Impulse Noise (dBrnC0)	EDD (Microseconds)		AJ (%)		PJ (°p−p)	
				R2	R3		604 Hz	2,804 Hz	4 to 300 Hz	20 to 300 Hz	4 to 300 Hz	20 to 300 Hz

FORMAT VII

VOICEBAND DATA TRANSMISSION TESTS – TRUNK CIRCUITS

PROJECT: _____ Date of Test: _____

LOCATION: From _____ (CO Name) to _____ (CO Name) AERIAL: _____ Tester (Contractor): _____

BURIED: _____ Tester (Engineer): _____

TEMPERATURE: _____ DATE: _____ UNDERGROUND: _____ Tester (Borrower): _____

Test Equip.: _____ Sheet _____ of _____

Trunk No.	Pair No. CO-A	Pair No. CO-B	Length (Miles or km)	S/CNN 1,004 Hz Tone at −13 dBm0 (dB)	S/IMD (dB)		Impulse Noise (dBrnC0)	EDD (Microseconds)		AJ (%)		PJ (°p−p)	
					R2	R3		604 Hz	2,804 Hz	4 to 300 Hz	20 to 300 Hz	4 to 300 Hz	20 to 300 Hz

[62 FR 24000, May 2, 1997]

§§ 1755.408–1755.499 [Reserved]

§ 1755.500 RUS standard for service installations at customers access locations.

(a) Sections 1755.501 through 1755.510 cover service installations at permanent or mobile home customer access locations. Sections 1755.501 through 1755.510 do not cover service installations at customer access locations associated with boat yards or marinas.

(b) Service installations for customer access locations in boat yards or marinas shall be performed in accordance with Article 800, Communications Circuits, of the American National Standards Institute/National Fire Protection Association (ANSI/NFPA) 70–1999, *National Electrical Code®* (*NEC®*). The *National Electrical Code®* and *NEC®* are registered trademarks of the National Fire Protection Association, Inc., Quincy, MA 02269. The ANSI/NFPA 70–

1999, *NEC*® is incorporated by reference in accordance with 5 U.S.C. 552(a) and 1 CFR part 51. Copies are available from NFPA, 1 Batterymarch Park, P.O. Box 9101, Quincy, Massachusetts 02269–9101, telephone number 1 (800) 344–3555. Copies of ANSI/NFPA 70–1999, *NEC*®, are available for inspection during normal business hours at Rural Utilities Service (RUS), room 2905, U.S. Department of Agriculture, 1400 Independence Avenue, SW., STOP 1598, Washington, DC 20250–1598, or at the National Archives and Records Administration (NARA). For information on the availability of this material at NARA, call 202–741–6030, or go to: *http://www.archives.gov/federal_register/code_of_federal_regulations/ibr_locations.html*.

[66 FR 43317, Aug. 17, 2001, as amended at 69 FR 18803, Apr. 9, 2004]

§ 1755.501 Definitions applicable to §§ 1755.501 through 1755.510.

For the purpose of this section and §§ 1755.502 through 1755.510, the following terms are defined as follows:

American National Standards Institute (ANSI). A private sector standards coordinating body which serves as the United States source and information center for all American National Standards.

Ampacity. As defined in the ANSI/NFPA 70–1999, *NEC*®: The current, in amperes, that a conductor can carry continuously under the conditions of use without exceeding its temperature rating. (Reprinted with permission from NFPA 70–1999, the *National Electrical Code*®, Copyright© 1998, National Fire Protection Association, Quincy, MA 02269. This reprinted material is not the complete and official position of the National Fire Protection Association, on the referenced subject which is represented only by the standard in its entirety.) The *National Electrical Code*® and *NEC*® are registered trademarks of the National Fire Protection Association, Inc., Quincy, MA 02269. The ANSI/NFPA 70–1999, *NEC*®, is incorporated by reference in accordance with 5 U.S.C. 552(a) and 1 CFR part 51. Copies are available from NFPA, 1 Batterymarch Park, P.O. Box 9101, Quincy, Massachusetts 02269–9101, telephone number 1 (800) 344–3555. Copies of ANSI/NFPA 70–1999, *NEC*®, are available for inspection during normal business hours at RUS, room 2905, U.S. Department of Agriculture, 1400 Independence Avenue, SW., STOP 1598, Washington, DC 20250–1598, or at the National Archives and Records Administration (NARA). For information on the availability of this material at NARA, call 202–741–6030, or go to: *http://www.archives.gov/federal_register/code_of_federal_regulations/ibr_locations.html*.

AWG. American Wire Gauge.

BET. Building entrance terminal.

Bonding (Bonded). As defined in the ANSI/NFPA 70–1999, *NEC*®: The permanent joining of metallic parts to form an electrically conductive path that will ensure electrical continuity and the capacity to conduct safely any current likely to be imposed. (Reprinted with permission from NFPA 70–1999, the *National Electrical Code*®, Copyright© 1998, National Fire Protection Association, Quincy, MA 02269. This reprinted material is not the complete and official position of the National Fire Protection Association, on the referenced subject which is represented only by the standard in its entirety.)

Bonding harness wire. A reliable electrical conductor purposefully connected between metal parts which are required to be electrically connected (bonded) to one another to ensure the metal parts are at similar electrical potential.

Building entrance terminal (BET). A BET is comprised of a housing suitable for indoor and outdoor installation which contains quick-connect or binding post terminals for terminating both telecommunications service cable conductors and inside wiring cable conductors. The BET also includes primary station protectors and a means of terminating the metallic shields of service entrance cables.

Demarcation point (DP). As defined in the Federal Communications Commission (FCC) rules in 47 CFR part 68: The point of demarcation or interconnection between telecommunications company communications facilities and terminal equipment, protective apparatus, or wiring at a subscriber's premises. Carrier-installed facilities at, or constituting, the demarcation point

shall consist of wire or a jack conforming to subpart F of 47 CFR part 68. ''Premises'' as used herein generally means a dwelling unit, other building or a legal unit of real property such as a lot on which a dwelling unit is located, as determined by the telecommunications company's reasonable and nondiscriminatory standard operating practices. The ''minimum point of entry'' as used herein shall be either the closest practicable point to where the wiring crosses a property line or the closest practicable point to where the wiring enters a multiunit building or buildings. The telecommunications company's reasonable and nondiscriminatory standard operating practices shall determine which shall apply. The telecommunications company is not precluded from establishing reasonable clarifications of multiunit premises for determining which shall apply. Multiunit premises include, but are not limited to, residential, commercial, shopping center, and campus situations.

(1) *Single unit installations.* For single unit installations existing as of August 13, 1990, and installations installed after that date, the demarcation point shall be a point within 12 inches (in.) (305 millimeters (mm)) of the primary protector, where there is no protector, within 12 in. (305 mm) of where the telecommunications wire enters the customer's premises.

(2) *Multiunit installations.* (i) In multiunit premises existing as of August 13, 1990, the demarcation point shall be determined in accordance with the local carrier's reasonable and nondiscriminatory standard operating practices. Provided, however, that where there are multiple demarcation points within the multiunit premises, a demarcation point for a customer shall not be further inside the customer's premises than a point 12 in. (305 mm) from where the wiring enters the customer's premises.

(ii) In multiunit premises in which wiring is installed after August 13, 1990, including additions, modifications, and rearrangements of wiring existing prior to that date, the telecommunications company may establish a reasonable and nondiscriminatory practice of placing the demarcation point at the minimum point of entry. If the telecommunications company does not elect to establish a practice of placing the demarcation point at the minimum point of entry, the multiunit premises owner shall determine the location of the demarcation point or points. The multiunit premises owner shall determine whether there shall be a single demarcation point for all customers or separate such locations for each customer. Provided, however, that where there are multiple demarcation points within the multiunit premises, a demarcation point for a customer shall not be further inside the customer's premises than a point 12 in. (305 mm) from where the wiring enters the customer's premises.

DP. Demarcation point.

Eligible country. Any country that applies with respect to the United States an agreement ensuring reciprocal access for United States products and services and United States suppliers to the markets of that country, as determined by the United States Trade Representative.

FCC. Federal Communications Commission.

Fuse link. As defined in the ANSI/NFPA 70–1999, *NEC®*: A fine gauge section of wire or cable that serves as a fuse (that is, open-circuits to interrupt the current should it become excessive) that coordinates with the telecommunications cable and wire plant, and protective devices. (Reprinted with permission from NFPA 70–1999, the *National Electrical Code®*, Copyright© 1998, National Fire Protection Association, Quincy, MA 02269. This reprinted material is not the complete and official position of the National Fire Protection Association, on the referenced subject which is represented only by the standard in its entirety.)

Grounding conductor. As defined in the ANSI/NFPA 70–1999, *NEC®*: A conductor used to connect equipment or the grounded circuit of a wiring system to a grounding electrode or electrodes. (Reprinted with permission from NFPA 70–1999, the *National Electrical Code®*, Copyright© 1998, National Fire Protection Association, Quincy, MA 02269. This reprinted material is not the complete and official position of the National Fire Protection Association, on

the referenced subject which is represented only by the standard in its entirety.)

Listed. As defined in the ANSI/NFPA 70–1999, *NEC*®: Equipment, materials, or services included in a list published by an organization that is acceptable to the authority having jurisdiction and concerned with evaluation of products or services, that maintains periodic inspection of production of listed equipment or materials or periodic evaluation of services, and whose listing states that either the equipment, material, or services meets identified standards or has been tested and found suitable for a specified purpose. (Reprinted with permission from NFPA 70–1999, the *National Electrical Code*®, Copyright© 1998, National Fire Protection Association, Quincy, MA 02269. This reprinted material is not the complete and official position of the National Fire Protection Association, on the referenced subject which is represented only by the standard in its entirety.)

Manufactured home. As defined in the ANSI/NFPA 70–1999, *NEC*®: A factory-assembled structure or structures that bears a label identifying it as a manufactured home that is transportable in one or more sections, that is built on a permanent chassis and designed to be used as a dwelling with or without a permanent foundation where connected to the required utilities, and includes the plumbing, heating, air conditioning, and electric systems contained therein. Unless otherwise indicated, the term ''mobile home'' includes manufactured homes. Fine Print Note (FPN) No. 1: See the applicable building code for definition of the term permanent foundation. FPN No. 2: See 24 CFR part 3280, Manufactured Home Construction and Safety Standards, of the Federal Department of Housing and Urban Development for additional information on the definition. (Reprinted with permission from NFPA 70–1999, the *National Electrical Code*®, Copyright© 1998, National Fire Protection Association, Quincy, MA 02269. This reprinted material is not the complete and official position of the National Fire Protection Association, on the referenced subject which is represented only by the standard in its entirety.)

Mobile home. As defined in the ANSI/NFPA 70–1999, *NEC*®: A factory-assembled structure or structures transportable in one or more sections that is built on a permanent chassis and designed to be used as a dwelling without a permanent foundation where connected to the required utilities, and includes the plumbing, heating, air-conditioning, and electric systems contained therein. Unless otherwise indicated, the term ''mobile home'' includes manufactured homes. (Reprinted with permission from NFPA 70–1999, the *National Electrical Code*®, Copyright© 1998, National Fire Protection Association, Quincy, MA 02269. This reprinted material is not the complete and official position of the National Fire Protection Association, on the referenced subject which is represented only by the standard in its entirety.)

Motor home. As defined in the ANSI/NFPA 70–1999, *NEC*®: A vehicular unit designed to provide temporary living quarters for recreational, camping, or travel use built on or permanently attached to a self-propelled motor vehicle chassis or on a chassis cab or van that is an integral part of the completed vehicle. (Reprinted with permission from NFPA 70–1999, the *National Electrical Code*®, Copyright© 1998, National Fire Protection Association, Quincy, MA 02269. This reprinted material is not the complete and official position of the National Fire Protection Association, on the referenced subject which is represented only by the standard in its entirety.)

Network interface device (NID). A NID is comprised of a housing suitable for outdoor installation which contains a compartment accessible by only telecommunications employees which includes a primary station protector and the means for terminating telecommunications service wire conductors and metallic shields, and a compartment accessible by customers which includes an RJ–11 plug and jack of the type specified in the FCC rules in 47 CFR part 68.

NID. Network interface device.

Primary station protector. An assembly which complies with RUS Bulletin 345–39, RUS Specification for Telephone

Station Protectors. Copies of RUS Bulletin 345–39 are available upon request from RUS, U.S. Department of Agriculture (USDA), 1400 Independence Avenue, SW., STOP 1522, Washington, DC 20250–1522, FAX (202) 720–4120.

Qualified Installer. A person who has extensive installation experience, complete knowledge and understanding of RUS Bulletin 1751F–805, Electrical Protection At Customer Locations; RUS Bulletin 1753F–153 (RUS Form 515d), Specifications and Drawings for Service Installations at Customer Access Locations, and applicable portions of the ANSI/NFPA 70–1999, *NEC®*, and ANSI/IEEE C2–1997, NESC. Copies of RUS Bulletins 1751F–805 and 1753F–153 are available upon request from RUS/USDA, 1400 Independence Avenue, SW., STOP 1522, Washington, DC 20250–1522, FAX (202) 720–4120.

Recreational vehicle. As defined in the ANSI/NFPA 70–1999, *NEC®*: A vehicular-type unit primarily designed as temporary living quarters for recreational, camping, or travel use, which either has its own motive power or is mounted on or drawn by another vehicle. The basic entities are: travel trailer, camping trailer, truck camper, and motor home. (Reprinted with permission from NFPA 70–1999, the *National Electrical Code®*, Copyright© 1998, National Fire Protection Association, Quincy, MA 02269. This reprinted material is not the complete and official position of the National Fire Protection Association, on the referenced subject which is represented only by the standard in its entirety.)

RUS. Rural Utilities Service.

RUS accepted (material and equipment). Equipment which RUS has reviewed and determined that:

(1) Final assembly or manufacture of the equipment is completed in the United States, its territories and possessions, or in an eligible country;

(2) The cost of components within the material or equipment manufactured in the United States, its territories and possessions, or in an eligible country is more than 50 percent of the total cost of all components used in the material or equipment; and

(3) The material or equipment is suitable for use on systems of RUS telecommunications borrowers.

RUS technically accepted (material and equipment). Equipment which RUS has reviewed and determined that the material or equipment is suitable for use on systems of RUS telecommunications borrowers but the material or equipment does not satisfy both paragraphs (1) and (2) of this definition:

(1) Final assembly or manufacture of the equipment is not completed in the United States, its territories and possessions, or in an eligible country; and

(2) The cost of components within the material or equipment manufactured in the United States, its territories and possessions, or in an eligible country is 50 percent or less than the total cost of all components used in the material or equipment.

SEA. Service entrance aerial.

SEB. Service entrance buried.

Travel trailer. As defined in the ANSI/NFPA 70–1999, *NEC®*: A vehicular unit, mounted on wheels, designed to provide temporary living quarters for recreational, camping, or travel use, of such size and weight as not to require special highway movement permits when towed by a motorized vehicle, and of gross trailer area less than 320 square feet (29.7 square meters). (Reprinted with permission from NFPA 70–1999, the *National Electrical Code®*, Copyright© 1998, National Fire Protection Association, Quincy, MA 02269. This reprinted material is not the complete and official position of the National Fire Protection Association, on the referenced subject which is represented only by the standard in its entirety.)

Truck camper. As defined in the ANSI/NFPA 70–1999, *NEC®*: A portable unit constructed to provide temporary living quarters for recreational, travel or camping use, consisting of a roof, floor, and sides, designed to be loaded onto and unloaded from the bed of a pick-up truck. (Reprinted with permission from NFPA 70–1999, the *National Electrical Code®*, Copyright© 1998, National Fire Protection Association, Quincy, MA 02269. This reprinted material is not the complete and official position of the National Fire Protection Association, on the referenced subject which is

represented only by the standard in its entirety.)

[66 FR 43317, Aug. 17, 2001, as amended at 69 FR 18803, Apr. 9, 2004]

§ 1755.502 Scope.

(a) Sections 1755.503 through 1755.510 cover approved methods of making service installations at customer access locations in telecommunications systems of RUS borrowers.

(b) Requirements in §§ 1755.503 through 1755.510 cover facilities of the type described in the FCC rules in 47 CFR part 68 for one and multi-party customer owned premises wiring.

[66 FR 43317, Aug. 17, 2001]

§ 1755.503 General.

(a) For the purposes of this section and §§ 1755.504 through 1755.510, a NID shall be as defined in § 1755.501 and shall contain both a fuseless primary station protector and a modular plug and jack for each conductor pair, up to a maximum of 11 pairs, and shall be provided by the telecommunications company and used by customers.

(b) For the purposes of this section and §§ 1755.504 through 1755.510, BET shall be as defined in § 1755.501 and shall contain both primary station protectors and connector terminals for each conductor pair, of 12 or more pairs, and shall be provided by the telecommunications company and used by customers. The primary station protectors may be either fuseless or fused.

(c) The requirements provided in this section and §§ 1755.504 through 1755.510 have been designed to coordinate with the provisions of the ANSI/NFPA 70–1999, *NEC®*, and the American National Standards Institute/Institute of Electrical and Electronics Engineers, Inc. (ANSI/IEEE) C2–1997, National Electrical Safety Code (NESC). The *National Electrical Code®* and *NEC®* are registered trademarks of the National Fire Protection Association, Inc., Quincy, MA 02269. The ANSI/NFPA 70–1999, NEC®, and the ANSI/IEEE C2–1997, NESC, are incorporated by reference in accordance with 5 U.S.C. 552(a) and 1 CFR part 51. Copies of ANSI/NFPA 70–1999, *NEC®*, are available from NFPA, 1 Batterymarch Park, P.O. Box 9101, Quincy, Massachusetts 02269–9101, telephone number 1 (800) 344–3555. Copies of ANSI/IEEE C2–1997, NESC, are available from IEEE Service Center, 455 Hoes Lane, Piscataway, New Jersey 08854, telephone number 1 (800) 678–4333. Copies of the ANSI/NFPA 70–1999, *NEC®*, and the ANSI/IEEE C2–1997, NESC, are available for inspection during normal business hours at RUS, room 2905, U.S. Department of Agriculture, 1400 Independence Avenue, SW., STOP 1598, Washington, DC 20250–1598, or at the National Archives and Records Administration (NARA). For information on the availability of this material at NARA, call 202–741–6030, or go to: *http://www.archives.gov/federal_register/code_of_federal_regulations/ibr_locations.html*. Most state and local authorities require that utility construction comply with either the ANSI/NFPA 70–1999, *NEC®*, and ANSI/IEEE C2–1997, NESC, or some earlier editions of the ANSI/NFPA 70, *NEC®*, and ANSI/IEEE C2, NESC. Some authorities have their own more stringent codes which may or may not be embellishments of the ANSI/NFPA 70, *NEC®*, and ANSI/IEEE C2, NESC.

(d) RUS borrowers shall make certain that all construction financed with RUS loan funds comply with:

(1) The provisions of this section and §§ 1755.504 through 1755.510 and the ANSI/NFPA 70–1999, *NEC®*, and ANSI/IEEE C2–1997, NESC codes, or any more stringent local codes; or

(2) The provisions of this section and §§ 1755.504 through 1755.510 with borrower added adjustments to bring construction into compliance with any more stringent local codes.

(e) This section and §§ 1755.504 through 1755.510 are intended primarily for the installer who will perform the work. It assumes that decisions regarding the selection of grounding electrodes, locations, and types of equipment have been made by the RUS borrower or the engineer delegated by the RUS borrower.

(f) Only a *qualified installer* as defined in § 1755.501 shall be assigned to make installations without advance planning and without direct supervision.

(g) This section and §§ 1755.504 through 1755.509 contain information which is normally not provided on the

construction drawings which are included in § 1755.510.

(h) All work shall be conducted in a careful and professional manner. Service wire and cable shall not be trampled on, run over by vehicles, pulled over or around abrasive objects or otherwise subjected to abuse.

(i) When situations not covered by this section and §§ 1755.504 through 1755.510 arise, the RUS borrower or the engineer delegated by the borrower, shall specify the installation procedure to be used. The requirements of paragraph (j) of this section shall be complied with in every installation.

(j) NIDs, BETs, and fused primary station protectors shall be installed and grounded to meet the requirements of the ANSI/NFPA 70–1999, *NEC®*, or local laws or ordinances, whichever are more stringent.

(k) Battery polarity and conductor identification shall be maintained throughout the system as indicated on construction drawings 815 and 815–1 contained in § 1755.510. Color codes and other means of conductor identification of buried and aerial service wires shall conform to the requirements of this section and §§ 1755.504 through 1755.510.

(l) All materials for which RUS makes acceptance determinations, such as service wires and cables, ground rods, ground rod clamps, etc., used in service entrance installations shall be RUS accepted or RUS technically accepted. Borrowers shall require contractors to obtain the borrower's approval before RUS technically accepted materials are to be used in service entrance installations. Borrower's shall also ensure that the cost of the RUS technically accepted materials are at least 6 percent less than the cost of equivalent RUS accepted materials, as specified in ''Buy American'' Requirement of the Rural Electrification Act of 1938, as amended (7 U.S.C. 903 note). Materials used in service entrance installations which are of the type which RUS does not make acceptance determinations shall be of a suitable quality for their intended application as determined by the RUS borrower or the engineer delegated by the RUS borrower.

(m) On completion of an installation, borrowers shall require the installer to make all applicable tests required by §§ 1755.400 through 1755.407, RUS standard for acceptance tests and measurements of telecommunications plant.

[66 FR 43317, Aug. 17, 2001, as amended at 69 FR 18803, Apr. 9, 2004]

§ 1755.504 Demarcation point.

(a) The demarcation point (DP) provides the physical and electrical interface between the telecommunications company's facilities and the customer's premises wiring.

(b) The Federal Communications Commission (FCC) rules in 47 CFR part 68 require telecommunications providers to establish a ''DP'' which marks a separation of the provider's facilities from the customer's (owned) premises wiring and equipment.

(c) RUS borrowers shall observe the FCC DP requirement by installing NIDs, BETs, or fused primary station protectors when required by section 800–30(a)(2) of ANSI/NFPA 70–1999, *NEC®*, at all new or significantly modified customer access locations which are financed with RUS loan funds. *The National Electrical Code®* and *NEC®* are registered trademarks of the National Fire Protection Association, Inc., Quincy, MA 02269. The ANSI/NFPA 70–1999, *NEC®*, is incorporated by reference in accordance with 5 U.S.C. 552(a) and 1 CFR part 51. Copies are available from NFPA, 1 Batterymarch Park, P. O. Box 9101, Quincy, Massachusetts 02269–9101, telephone number 1 (800) 344–3555. Copies of ANSI/NFPA 70–1999, *NEC®*, are available for inspection during normal business hours at RUS, room 2905, U.S. Department of Agriculture, 1400 Independence Avenue, SW., STOP 1598, Washington, DC 20250–1598, or at the National Archives and Records Administration (NARA). For information on the availability of this material at NARA, call 202–741–6030, or go to: *http://www.archives.gov/federal_register/code_of_federal_regulations/ibr_locations.html.*

(d) For all customer access locations of less than 12 pairs, RUS borrowers shall establish DPs by using either NIDs or fused primary station protectors when required by section 800–

30(a)(2) of ANSI/NFPA 70–1999, *NEC®*. For customer access locations of 12 pairs or greater, RUS borrowers shall establish DPs using either NIDs, BETs, or fused primary station protectors when required by section 800–30(a)(2) of ANSI/NFPA 70–1999, *NEC®*.

[66 FR 43317, Aug. 17, 2001, as amended at 69 FR 18803, Apr. 9, 2004]

§ 1755.505 Buried services.

(a) Buried services of two or three pairs shall consist of Service Entrance Buried (SEB) assembly units, in accordance with RUS Bulletin 1753F–153 (RUS Form 515d), Specifications and Drawings for Service Installations at Customer Access Locations. The wire used for buried services shall conform to the requirements of § 1755.860, RUS specification for filled buried wires, and shall be RUS accepted or RUS technically accepted. The conductor size for two and three pair buried service wires shall be 22 American Wire Gauge (AWG). Copies of RUS Bulletin 1753F–153 are available upon request from RUS/USDA, 1400 Independence Avenue, SW., STOP 1522, Washington, DC 20250–1522, FAX (202) 690–2268.

(b) Buried services of six or more pairs shall be RUS accepted or RUS technically accepted 22 AWG filled buried cable conforming to the requirements of § 1755.390, RUS specification for filled telephone cables.

(c) Buried service wire or cable shall be terminated in buried plant housings using either splicing connectors or filled terminal blocks in accordance with the applicable paragraphs of § 1755.200, RUS standard for splicing copper and fiber optic cables.

(d) Buried service wire or cable shall be identified at buried plant housings in accordance with construction drawing 958 contained in § 1755.510.

(e) Buried service wire or cable shall be installed up to the building in the same general manner as buried exchange cable but in addition must meet the following requirements:

(1) Light weight lawn plows or trenchers shall be used;

(2) The shortest feasible route commensurate with the requirements of § 1755.508(i), (j), and (k), and paragraph (f)(1) of this section shall be followed;

(3) Buried service wire or cable shall be plowed or trenched to a depth of 12 in. (305 mm) or greater where practicable in soil, 36 in. (914 mm) in ditches, or 3 in. (76 mm) in rock. Depths shall be measured from the top of the wire or cable to the surface of the ground or rock;

(4) In the case of a layer of soil over rock either the minimum depth in rock measured to the surface of the rock, or the minimum depth in soil measured to the surface of the soil may be used; and

(5) Where adequate advance planning has been done, burial of telecommunications services jointly with electric power services may be feasible. If a decision has been reached by management to provide joint occupancy services, the services may be installed using the recommendations in RUS Bulletin 1751F–640, ''Design of Buried Plant—Physical Considerations.'' Copies of RUS Bulletin 1751F–640 are available upon request from RUS/USDA, 1400 Independence Avenue, SW., STOP 1522, Washington, DC 20250–1522, FAX (202) 720–4120.

(f) Buried service wire or cable shall be installed on or in buildings as follows:

(1) Each buried service wire or cable shall contact the building as close to the NID, BET, or fused primary station protector as practicable. Service wire or cable runs on buildings shall normally consist of a single vertical run held to the minimum practical length. Horizontal and diagonal runs shall not be permitted.

(2) Buried service wire or cable shall be located so as to avoid damage from lawn mowers, animals, gardening operations, etc.

(3) Buried service wire or cable shall be installed against a foundation wall or pillar to provide adequate support and mechanical protection.

(4) Where it is likely that the service wire or cable shall be subjected to mechanical damage, the wire or cable shall be enclosed in a guard in accordance with assembly unit drawing BM83 contained in § 1755.510.

(5) The first above-ground attachment for a buried service wire or cable, unless it is enclosed in a guard, shall not be more than 4 in. (100 mm) above final grade.

(6) Uninsulated attachment devices may be used to attach buried service wire and cable to masonry and other types of noncombustible buildings and on any type of building if fuseless primary station protectors incorporated in NIDs or BETs are used and installations fully comply with section 800–30(a)(1) of ANSI/NFPA 70–1999, *NEC®*. The *National Electrical Code®* and *NEC®* are registered trademarks of the National Fire Protection Association, Inc., Quincy, MA 02269. The ANSI/NFPA 70–1999, *NEC®*, is incorporated by reference in accordance with 5 U.S.C. 552(a) and 1 CFR part 51. Copies are available from NFPA, 1 Batterymarch Park, P.O. Box 9101, Quincy, Massachusetts 02269–9101, telephone number 1(800)344–3555. Copies of ANSI/NFPA 70–1999, *NEC®*, are available for inspection during normal business hours at RUS, room 2905, U.S. Department of Agriculture, 1400 Independence Avenue, SW., STOP 1598, Washington, DC 20250–1598, or at the National Archives and Records Administration (NARA). For information on the availability of this material at NARA, call 202–741–6030, or go to: *http://www.archives.gov/federal_register/code_of_federal_regulations/ibr_locations.html*.

(7) Insulated attachments shall be used to separate service wires or cables from woodwork where section 800–30(a)(2) of ANSI/NFPA 70–1999, *NEC®* requiring the use of fused primary station protectors must be observed.

(8) Minimum separation between buried service wire or cable and other facilities shall be as listed in Table 1, as follows:

TABLE 1—MINIMUM SEPARATION FOR TELECOMMUNICATIONS WIRES AND CABLES ON OR IN BUILDINGS

Foreign facility or obstruction	Minimum clearance in. [mm] [1,2] telecommunications company's wires or cables
Electric supply wire including neutral and grounding conductors:	
Open	4 [102]
In conduit	2 [50.8]
Radio and television antennas, Lead-in and grounding conductors	4 [102]
Lightning rods and lightning conductors	[3] 72 [1830]
All foreign grounding conductors except lightning rod ground conductors	2 [50.8]
Neon signs and associated wiring	6 [150]
Metallic objects—pipes (gas, cold water, oil, sewer) and structures	[4] 2 [50.8]
Wires or cables of another communications system	2 [50.8]

[1] If minimum separation cannot be obtained, nonshielded wire and cable facilities shall be protected with either porcelain tubes or flexible tubing as modified by Notes (3) and (4) of this table.
[2] Separation applies to crossings and parallel runs.
[3] If this separation cannot be obtained, bond the telecommunications grounding conductors or grounding electrode to the lightning rod grounding conductor or grounding electrode with at least a Number (No.) 6 AWG copper, insulated, ground wire. With this provision a minimum separation of 4 in. (100 mm) is acceptable but this provision must not be utilized if the separation cited in this table can be maintained.
[4] Increase to a minimum of 3 in. (75 mm) separation from steam or hot water pipes, heating ducts, and other heat sources.

(9) Wire and cable attachments to buildings for outside mounted NIDS, BETs, or fused primary station protectors shall be in accordance with construction drawing 962 contained in § 1755.510.

(10) Appropriate devices for attaching service wire or cable on or in buildings vary with the type of building construction and the wire or cable size. Figures 1 and 2 illustrate various types of anchoring devices and their applications. The size and type of fastening device for the wire or cable size and type of surface shall be in accordance with the manufacturer's recommendation; Figures 1 and 2 are as follows:

FIGURE 1 ANCHORING DEVICES

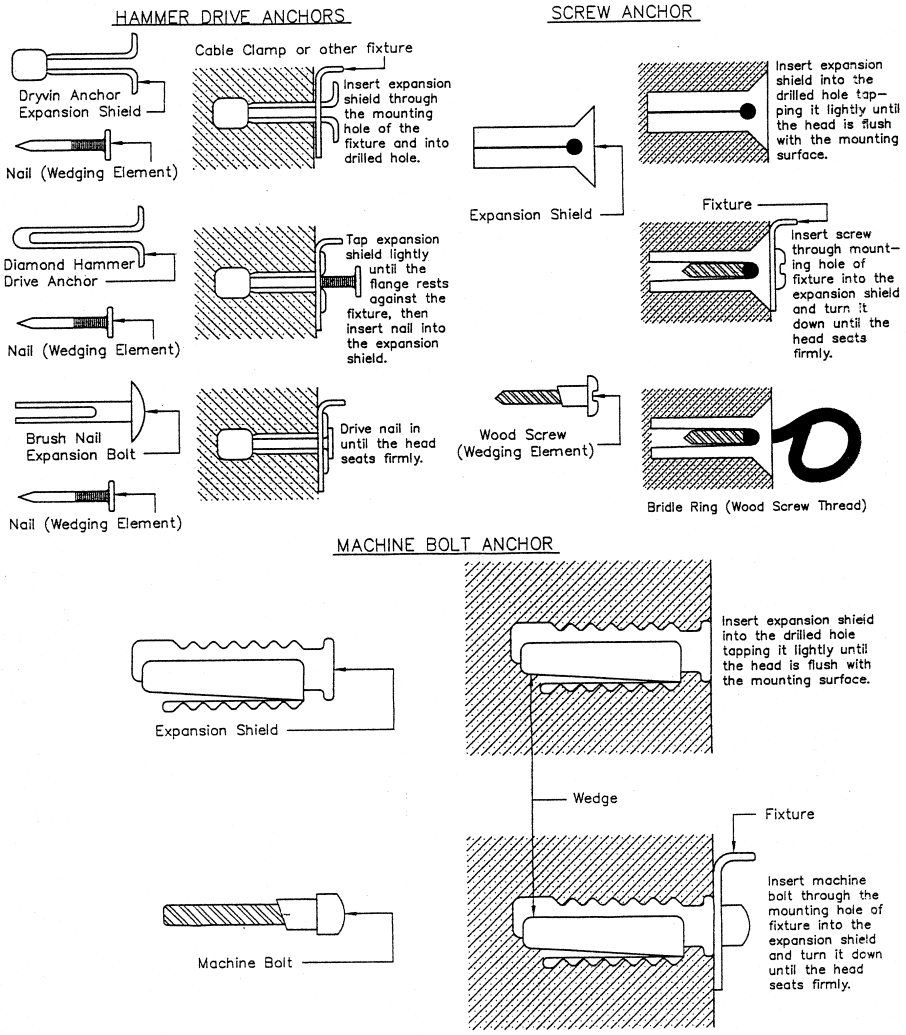

FIGURE 2 CABLE ATTACHMENT DEVICES

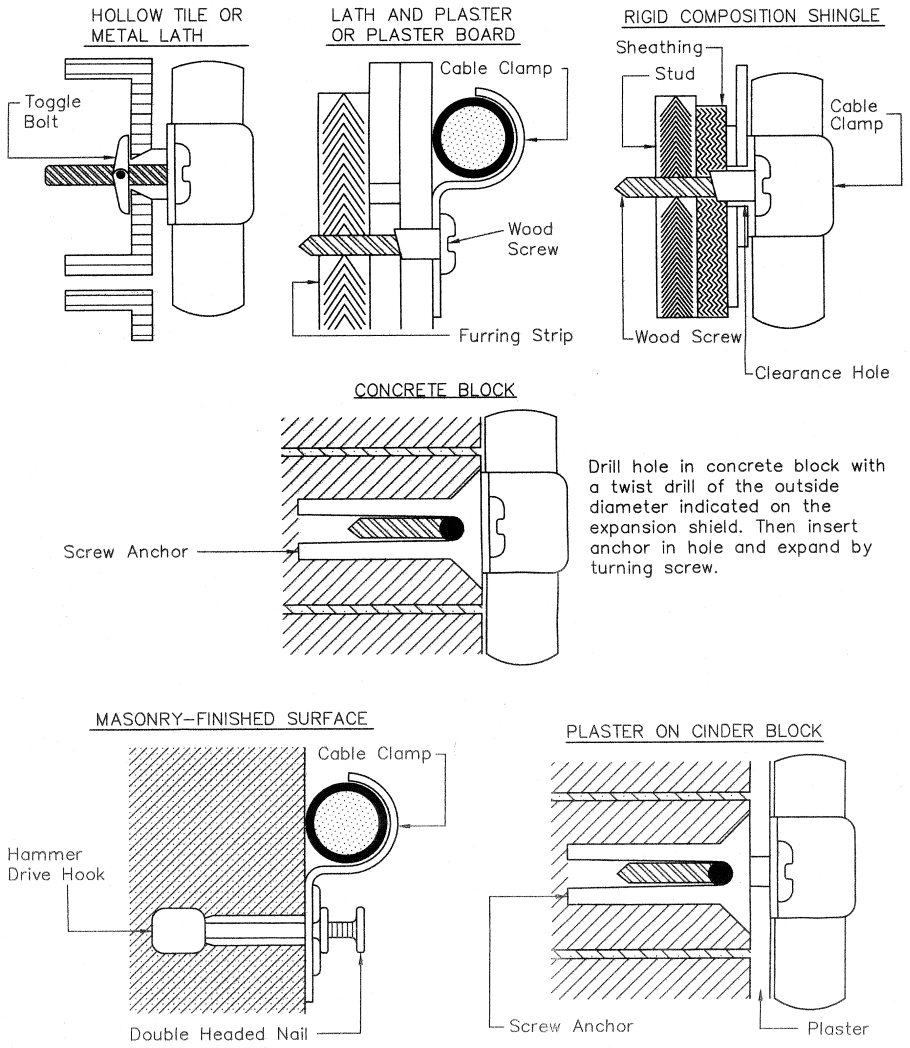

(11) Experience indicates that there are objections from many owners of buildings covered with aluminum or vinyl siding to the drilling of holes in the siding for the attachment of wires or cables, and NIDs, BETs, or fused primary station protectors. It is, therefore, important to obtain permission from the owner before drilling holes in such siding.

(12) If the NID, BET, or fused primary station protector must be mounted inside (not recommended by RUS), the service entrance into the building shall be installed in accordance with section 800–12(c) of ANSI/NFPA 70–1999, *NEC*®. After pulling-in the wire or cable, the

free space around the cable or wire shall be carefully sealed both outside and inside with a duct sealer that has RUS acceptance or RUS technical acceptance.

(13) If the customer requests an all buried installation for an alarm system or objects to above-ground facilities because of appearance and one-party service is involved, the entrance hole shall be made below grade as shown in sketch C of construction drawing 510–2 contained in §1755.510. Care shall be exercised to prevent damage to the building foundation. The hole shall be sealed as specified in paragraph (f)(12) of this section. The installation shall comply with all the requirements of section 800–12(c) of ANSI/NFPA 70–1999, *NEC*®.

(g) When the NID, BET, or fused primary station protector is to be installed inside the building, the installation shall comply with section 800–12(c) of ANSI/NFPA 70–1999, *NEC*®, and the outside plant wire or cable shall preferably be installed in a rigid metal or intermediate metal conduit that is grounded to an electrode in accordance with section 800–40(b) of ANSI/NFPA 70–1999, *NEC*®, as shown in sketch A of Figure 3 in paragraph (h)(2) of this section. The shield of the outside plant wire or cable shall be bonded to the grounding terminal of the NID, BET, or fused primary station protector which in turn shall be connected to the closest, existing, and accessible grounding electrode, of the electrodes cited in section 800–40(b) of ANSI/NFPA 70–1999, *NEC*®.

(h) An inside NID, BET, or fused primary station protector installation may also be made without use of a rigid metal or intermediate metal conduit provided that the ingress of the outside plant wire or cable complies with section 800–12(c) of ANSI/NFPA 70–1999, *NEC*®, and provided either of the following are observed:

(1) The NID, BET, or fused primary station protector is located as close as practicable to the point where the outside plant wire or cable emerges through an exterior wall. The length of outside plant wire or cable exposed within the building shall be as short as practicable but in no case shall it be longer than 50 feet (ft) (15.2 meters (m)) in accordance with the allowable exception No. 3 of section 800–50 of ANSI/NFPA 70–1999, *NEC*®. See sketch B of Figure 3 in paragraph (h)(2) of this section. The shield of the outside plant wire or cable shall be bonded to the grounding terminal of the NID, BET, or fused primary station protector which in turn shall be connected to the closest, existing and accessible grounding electrode, of the electrodes cited in section 800–40(b) of ANSI/NFPA 70–1999, *NEC*® (Fine print Note No. 2 of ANSI/NFPA 70–1999, *NEC*®, section 800–50, warns that the full 50 ft (15.2 m) may not be authorized for outside unlisted cable (not in a metal or intermediate metal conduit) within a building if it is practicable to place the NID, BET, or fused primary station protector closer than 50 ft (15.2 m) to the cable entrance point, e.g., if there is an acceptable and accessible grounding electrode of the type cited in section 800–40(b) of ANSI/NFPA 70–1999, *NEC*®, anywhere along the proposed routing of the outside cable within the building); or

(2) Where the NID, BET, or fused primary station protector must be located within the building remote from the entrance point and the entrance point of the outside plant wire or cable cannot be designed to be closer to the NID, BET, or fused primary station protector location, the outside plant wire or cable shall be spliced, as close as practicable to the point where the outside plant wire or cable emerges through an outside wall, to an inside wiring cable that is ''Listed'' as being suitable for the purpose in accordance with part E of article 800 of ANSI/NFPA 70–1999, *NEC*®. The length of outside plant wire or cable exposed within the building shall be as short as practicable but in no case shall it be longer than 50 ft (15.2 m) in accordance with the allowable exception No. 3 of section 800–50 of ANSI/NFPA 70–1999, *NEC*®. See sketch C of Figure 3. The shield of the outside plant wire or cable shall be bonded to the grounding terminal of the NID, BET, or fused primary station protector which in turn shall be connected to the closest, existing, and accessible grounding electrode, of the electrodes cited in section 800–40(b) of ANSI/NFPA 70–1999, *NEC*® (Fine print Note No. 2 of the ANSI/NFPA 70–1999, *NEC*®, section 800–50, warns that the

full 50 ft (15.2 m) may not be authorized for outside unlisted cable (not in a metal or intermediate metal conduit) if it is practicable to place the NID, BET, or fused primary station protector closer than 50 ft (15.2 m) to the cable entrance point, e.g., if there is an acceptable and accessible grounding electrode of the type cited in section 800–40(b) of ANSI/NFPA 70–1999, *NEC*®, anywhere along the proposed routing of the outside cable within the building). Figure 3 is as follows:

FIGURE 3

CABLE ENTRANCES AND RUNS IN BUILDINGS

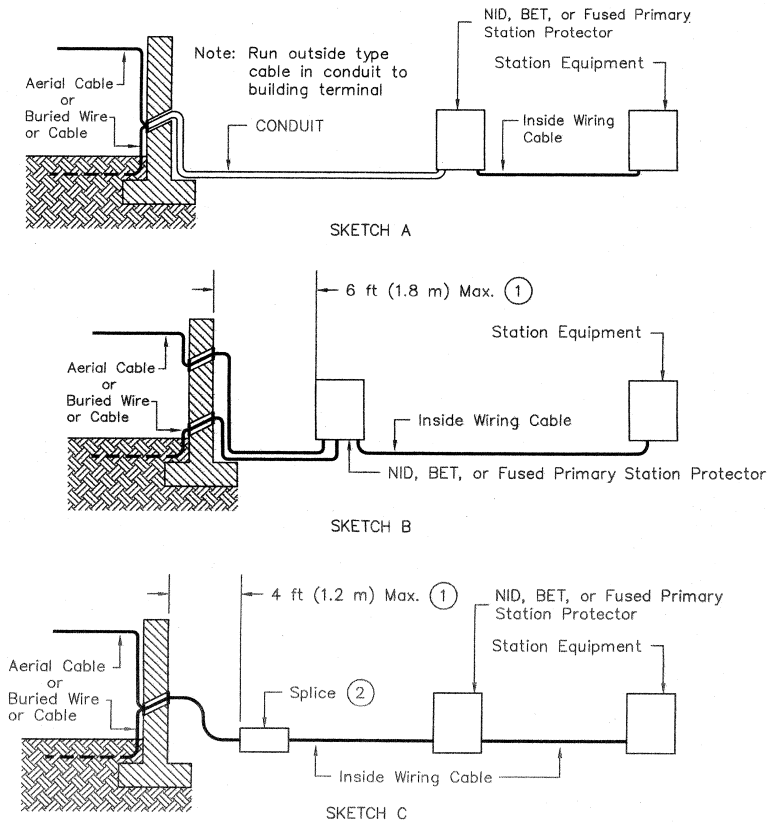

Notes:

1. Recommended maximum is shown; length cannot exceed the ANSI/NFPA 70–1999, NEC® allowable length of 50 ft (15.2 m). (See Fine Print Note No. 2 of Section 800–50 of ANSI/NFPA 70–1999, NEC®)
2. Outside plant cable shield shall be connected to an acceptable grounding electrode. If splice case is metallic, the splice case shall also be connected to the same acceptable grounding electrode.

(i) The polarity of buried wire or cable ''tip'' and ''ring'' conductors shall be maintained by making the connections in accordance with Table 2, as follows:

TABLE 2—COLOR CODES FOR TIP AND RING CONNECTIONS OF INSIDE WIRING CABLE

Pair	Tip		Ring	
	Color of insulation	Color of marking	Color of insulation	Color of marking
1	White	Blue	Blue	White
2	White	Orange	Orange	White
3	White	Green	Green	White
4	White	Brown	Brown	White
5	White	Slate	Slate	White
6	Red	Blue	Blue	Red
7	Red	Orange	Orange	Red
8	Red	Green	Green	Red
9	Red	Brown	Brown	Red
10	Red	Slate	Slate	Red
11	Black	Blue	Blue	Black
12	Black	Orange	Orange	Black
13	Black	Green	Green	Black
14	Black	Brown	Brown	Black
15	Black	Slate	Slate	Black
16	Yellow	Blue	Blue	Yellow
17	Yellow	Orange	Orange	Yellow
18	Yellow	Green	Green	Yellow
19	Yellow	Brown	Brown	Yellow
20	Yellow	Slate	Slate	Yellow
21	Violet	Blue	Blue	Violet
22	Violet	Orange	Orange	Violet
23	Violet	Green	Green	Violet
24	Violet	Brown	Brown	Violet
25	Violet	Slate	Slate	Violet

[66 FR 43317, Aug. 17, 2001, as amended at 69 FR 18803, Apr. 9, 2004]

§ 1755.506 Aerial wire services

(a) Aerial services of one through six pairs shall consist of Service Entrance Aerial (SEA) assembly units, in accordance with RUS Bulletin 1753F–153 (RUS Form 515d), Specifications and Drawings for Service Installations at Customer Access Locations. The wire used for aerial services shall conform to the requirements of §§ 1755.700 through 1755.704, RUS specification for aerial service wires, and shall be RUS accepted or RUS technically accepted. Copies of RUS Bulletin 1753F–153 are available upon request from RUS/USDA, 1400 Independence Avenue, SW., STOP 1522, Washington, DC 20250–1522, FAX (202) 720–4120.

(b) If aerial wire services are to be connected to aerial cable pairs, the NIDs or fused primary station protectors and grounds shall be installed and connected before the aerial service wires are attached to the customer's structure.

(c) Kinks or splices shall not be permitted in aerial service wire spans.

(d) Aerial service wires shall be run in accordance with the construction drawings contained in § 1755.510 and shall conform to all clearance requirements of the ANSI/NFPA 70–1999, *NEC®*, and ANSI/IEEE C2–1997, NESC, or local laws or ordinances, whichever are the most stringent. The *National Electrical Code®* and *NEC®* are registered trademarks of the National Fire Protection Association, Inc., Quincy, MA 02269. The ANSI/NFPA 70–1999, *NEC®*, and ANSI/IEEE C2–1997, NESC, are incorporated by reference in accordance with 5 U.S.C. 552(a) and 1 CFR part 51. Copies of ANSI/NFPA 70–1999, *NEC®*, are available from NFPA, 1 Batterymarch Park, P.O. Box 9101, Quincy, Massachusetts 02269–9101, telephone number 1 (800) 344–3555. Copies of ANSI/IEEE C2–1997, NESC, are available from IEEE Service Center, 455 Hoes Lane, Piscataway, New Jersey 08854, telephone number 1 (800) 678–4333. Copies of ANSI/NFPA 70–1999, *NEC®*, and ANSI/IEEE C2–1997, NESC, are

available for inspection during normal business hours at RUS, room 2905, U.S. Department of Agriculture, 1400 Independence Avenue, SW., STOP 1598, Washington, DC 20250–1598, or at the National Archives and Records Administration (NARA). For information on the availability of this material at NARA, call 202–741–6030, or go to: *http://www.archives.gov/federal_register/code_of_federal_regulations/ibr_locations.html.*

(e) Aerial service wire shall be installed using the maximum practicable sag consistent with the required ground clearance and good construction practices. In no event shall the minimum sags be less than the values shown on construction drawing 505 contained in §1755.510 for various span lengths and loading areas provided. Span lengths shall not exceed 250 ft (76 m).

(f) To reduce vibration and galloping, aerial service wire shall be twisted one complete turn for each 10 ft (3 m) of span length at the time of installation.

(g) The methods of attaching aerial service wires at poles shall be as illustrated in construction drawings 503–2 and 504 contained in §1755.510.

(h) Horizontal and vertical climbing spaces on poles used jointly with power circuits shall be provided in conformance with the requirements of Rule 236 of ANSI/IEEE C2–1997, NESC.

(i) Not more than four aerial service wires shall be distributed from any one 7/16 in. (10 mm) drive hook, or more than two aerial service wires from any one 5/16 in. (8 mm) drive hook. Aerial service wires and drive hooks shall be arranged so that the load does not pull the drive hook out of the pole. When more than one drive hook is required, the drive hooks shall be staggered with a minimum separation of 1 in. (25.4 mm) horizontally on centers and 1.5 in. (40 mm) vertically on centers. If drive hooks are placed within 3 in. (76 mm) of the top of the pole and on the opposite side of the pole's circumference, a vertical separation of at least 3 in. (76 mm) shall be provided. A drive hook shall not be placed on the top of a pole or stub pole.

(j) When connecting aerial service wires to cable pairs at terminals, sufficient slack shall be provided so that each aerial service wire shall reach any binding post position as shown on construction drawing 312–1 contained in §1755.510.

(k) Aerial service wire attachments on utility poles and the manner of placing bridle rings and entering cable terminals shall be as shown on construction drawing 503–2 contained in §1755.510.

(l) Not more than two conductors shall be connected to any terminal binding post. Where it is necessary to bridge more than two aerial service wires at the same closure, the aerial service wires shall be terminated in aerial service wire terminals connected in parallel with a No. 20 AWG bridle wire which shall be terminated on the binding posts of the filled terminal block.

(m) Where aerial service wire is attached to aerial plastic cable, it shall be brought directly into a ready-access closure and shall be terminated on the binding posts of the filled terminal block as shown on construction drawing 503–2 contained in §1755.510.

(n) The conductor of copper coated steel reinforced aerial service wires identified by tracer ridges shall be used as the ring (negative battery) conductor of the pair, and shall normally be connected to the right or lower binding post of a pair on filled terminal blocks and NIDs or fused primary station protectors.

(o) *Nonmetallic reinforced aerial service wire pair identification.* (1) The tip and ring conductors of nonmetallic reinforced aerial service wires shall be identified in accordance with Table 3, as follows:

TABLE 3—NONMETALLIC REINFORCED AERIAL SERVICE WIRE COLOR CODE

Pair number	Conductor color	
	Tip	Ring
1	White/Blue or White	Blue
2	White/Orange or White	Orange
3	White/Green or White	Green

TABLE 3—NONMETALLIC REINFORCED AERIAL SERVICE WIRE COLOR CODE—Continued

Pair number	Conductor color	
	Tip	Ring
4	White/Brown or White	Brown
5	White/Slate or White	Slate
6	Red/Blue or Red	Blue

(2) The ring (negative battery) conductor of the pair shall normally be connected to the right or lower binding post of a pair on filled terminal blocks and NIDs or fused primary station protectors.

(p) When it is necessary to avoid intervening obstacles between a pole and a building, span clamp attachments shall be used to support the aerial service wires at points between the poles that are supporting the cable on the suspension strand as indicated by construction drawings 501–1 and 501–2 contained in § 1755.510.

(q) Aerial service wire strung from pole to pole shall be placed entirely below or entirely above any existing wire or cable. When adequate ground clearance can be obtained, preference shall be given to placing aerial service wire below wire and cable.

(r) When more than one aerial service wire is installed from pole to pole, the first aerial service wire shall be sagged in accordance with construction drawing 505 contained in § 1755.510. Succeeding aerial service wires shall be sagged with 2 in. (50.8 mm) more sag for each aerial service wire.

(s) Aerial service wire spans from pole lines to buildings shall follow the shortest feasible route commensurate with the requirements of paragraph (t) of this section and shall be sagged in accordance with construction drawing 505 contained in § 1755.510. The route shall avoid trees and other obstructions to the extent practicable. Where trees cannot be avoided, tree trimming permission shall be obtained from the owner or the owner's representative, and all limbs and foliage within 2 ft (600 mm) of the finally sagged wire shall be removed. If tree trimming permission cannot be obtained, the matter shall be referred to the borrower for resolution before proceeding with the installation.

(t) Aerial service wires shall contact buildings as closely as practicable at a point directly above the NID, or fused primary station protector. Generally, horizontal drop wire runs on buildings shall not exceed 20 ft (6 m). The warning given in § 1755.505(f)(11) regarding drilling holes in aluminum and vinyl siding applies also to attaching aerial service wires.

(u) The point of the first building attachment shall be located so that the aerial service wire will be clear of roof drainage points.

(v) Where practicable, aerial service wires shall pass under electrical guys, power distribution secondaries and services, tree limbs, etc.

(w) Aerial service wire shall not pass in front of windows or immediately above doors.

(x) Aerial service wires shall be routed so as to have a minimum clearance of 2 ft (600 mm) from any part of a short wave, ham radio, etc. antenna mast and a television antenna mast in its normal vertical position and of the possible region through which it sweeps when being lowered to a horizontal position.

(y) Aerial service wires shall be installed such that all clearances and separations comply with either section 237 of ANSI/IEEE C2–1997, NESC, or ANSI/NFPA 70–1999, *NEC*®, or local laws or ordinances, whichever is the most stringent.

(z) Aerial service wire attachments to buildings shall be as follows:

(1) First attachments on buildings shall be made in accordance with construction drawings 506, 507, or 508–1 contained in § 1755.510, as applicable;

(2) Intermediate attachments on buildings shall be made in accordance with construction drawings 510 or 510–1 contained in § 1755.510; and

(3) Uninsulated attachments shall be permitted to be used as follows:

(i) Wherever NIDS are used as permitted by section 800–30(a)(1) of the ANSI/NFPA 70–1999, *NEC*®; and

(ii) On masonry and other types of nonflammable buildings.

(aa) Insulated attachments shall be used on wooden frame, metallic siding and other types of combustible buildings where fused primary station protectors are used, as required by section 800–30(a)(2) of ANSI/NFPA 70–1999, *NEC*®.

(bb) Aerial service wire runs on buildings shall be attached vertically and horizontally in a neat and most inconspicuous possible manner. See construction drawing 513 contained in § 1755.510. Horizontal runs on buildings are undesirable and shall be kept to a minimum. Diagonal runs shall not be made.

(cc) Aerial service wire runs on buildings shall be located so as not to be subjected to damage from passing vehicles, pedestrians, or livestock.

(dd) Minimum separation between aerial service wires and other facilities on or in buildings shall be in accordance with § 1755.505(f)(8), Table 1.

(ee) Appropriate devices for attaching aerial service wires to buildings vary with the type of building construction and with the type of customer access location equipment. Table 4 lists various types of attachments and their application with respect to construction, customer access location equipment, and proper mounting devices. Construction drawings 506 through 513 contained in § 1755.510 illustrate requirements with respect to various angles of service wire contacts and uses of various attachments. Table 4 is as follows:

Table 4
DEVICES FOR ATTACHING AERIAL SERVICE WIRES TO BUILDINGS (1), (2), (8)

TYPE OF ATTACHMENT		TYPES OF FASTENING DEVICES											
		FRAME BUILDINGS (3)								FIRE RESISTANT BUILDINGS (4)			
		FUSED STATION PROTECTOR				NID				(NID OR FUSED STATION PROTECTOR)			
		Wood Shingle–Composition (5)	Plywood–Plastic–Board Paneling	Thin Brick–Stucco–Plaster	Metal Sheath	Wood Shingle–Composition (5)	Plywood–Plastic–Board Paneling	Thin Brick–Stucco–Plaster	Metal Sheath	Concrete Block	Tile	Brick Stone Concrete	Steel
Knob, S	Under 30° Angle	2–1/2" x #18 FH Screw	3" x #18 FH Screw	3" x #18 FH Screw	2–1/2" x #18 FH Screw	2–1/2" x #18 FH Screw	3" x #18 FH Screw	3" x #18 FH Screw	2–1/2" x #18 FH Screw				
	Over 30° Angle	5/16" Angle Screw	5/16" Angle Screw	3/8" Angle Screw	5/16" Angle Screw	5/16" Angle Screw	5/16" Angle Screw	3/8" Angle Screw	5/16" Angle Screw				
Knob, C		2–1/2" x #10 RH Screw	3" x #10 RH Screw	3–1/2" x #10 RH Screw	2–1/2" x #10 RH Screw	Note 6	Note 6	Note 6	Note 6				
Bracket, House		2" x #14 RH Screw	2" x #14 RH Screw	2–1/2" x #14 RH Screw	2" x #14 RH Screw	Note 6	Note 6	Note 6	Note 6				
Bracket, Corner		2" x #14 RH Screw	2" x #14 RH Screw	2–1/2" x #14 RH Screw	2" x #14 RH Screw	2" x #14 RH Screw	2" x #14 RH Screw	2–1/2" x #14 RH Screw	2" x #14 RH Screw	3/16" x 4" Toggle	3/16" x 4" Toggle	2" x #14 RH Screw	3/16" x 4" Toggle
Screweye, Insulated		1" Shank	1" Shank	2" Shank	1" Shank	Note 6	Note 6	Note 6	Note 6				
Ring, Bridle, Drive		Note 6	Note 6	Note 6	Note 6	Note 7	Note 7	Note 6	Note 7	Drive Anchor	Note 6	Drive Anchor	Note 6
Ring, Bridle, Screw		Note 6	Note 6	Note 6	Note 6	Note 7	Note 7	Note 6	Note 7	Expansion Anchor	Note 6	Expansion Anchor	Note 6
Hook, Drop Wire		Note 6	Note 6	Note 6	Note 6	2" x #14 RH Screw	2" x #14 RH Screw	2" x #14 RH Screw	2" x #14 RH Screw	1/4" x 4" Toggle	1/4" x 4" Toggle	2" x #18 RH Screw	1/4" x 3" Toggle
Hook, House		Note 6	Note 6	Note 6	Note 6	2" x #14 RH Screw	2" x #14 RH Screw	2" x #14 RH Screw	2" x #14 RH Screw	Expansion Anchor	Note 6	Expansion Anchor	Note 6
Ring, Bridle, Toggle										3/16" x 4" Toggle	3/16" x 4" Toggle	Note 6	3/16" x 4" Toggle
Clamp, One Hole, Offset or closed "U" Cable Strap		Note 6	Note 6	Note 6	Note 6	3/4" x #6 RH Screw	3/4" x #6 RH Screw	3/4" x #6 RH Screw	3/4" x #6 RH Screw	1" x #6 RH Screw	1/8" x 4" Toggle	1" x #6 RH Screw	1/2" x #6 SM Screw

NOTES: 1. Screw dimensions are minimum. Where appropriate, either or both dimensions shall be increased. All wood screws for exterior use shall be stainless steel. All other exterior metal devices shall be stainless steel, zinc coated steel, silicon bronze, or corrosion resistant aluminum alloy.

2. Toggle bolt dimensions are minimum. Where appropriate, either or both dimensions shall be increased.

3. All devices should be attached to studding.

4. Screw-type devices shall be secured by means of expansion-type anchors. Equivalent manual or machine-driven devices may be used. Where toggle bolts are specified equivalent devices may be used.

5. Pilot holes shall be provided for screws and bridle rings in shingles and dropsiding.

6. Attachment device not applicable.

7. Attachment device applicable but no separate fastening device required.

8. To convert English units to Metric units use 1 in. = 25.4 mm.

(ff) Fastener spacings for vertical and horizontal runs on frame or masonry buildings shall not be more than 6 ft (2 m) apart. Fasteners should be spaced close enough to prevent the aerial service wire from ''slapping'' against the building during windy conditions.

(gg) When it is necessary to pass behind or around obstructions such as downspouts and vertical conduits, the aerial service wire shall be supported firmly with attachment devices placed not more than 6 in. (152 mm) from the obstruction as illustrated in Figures 4 and 5 of paragraph (hh) of this section. Preferably, the aerial service wire should be routed behind obstructions to minimize the possibility of mechanical damage to the aerial service wire in the event repair work to the obstruction is required.

(hh) When passing around building projections of masonry or wood or around corners, aerial service wires shall be installed as illustrated in Figures 5 and 6. Figures 4, 5, and 6 are as follows:

FIGURE 4

AERIAL SERVICE WIRE CROSSING OBSTRUCTIONS
WOODEN BUILDING SURFACES

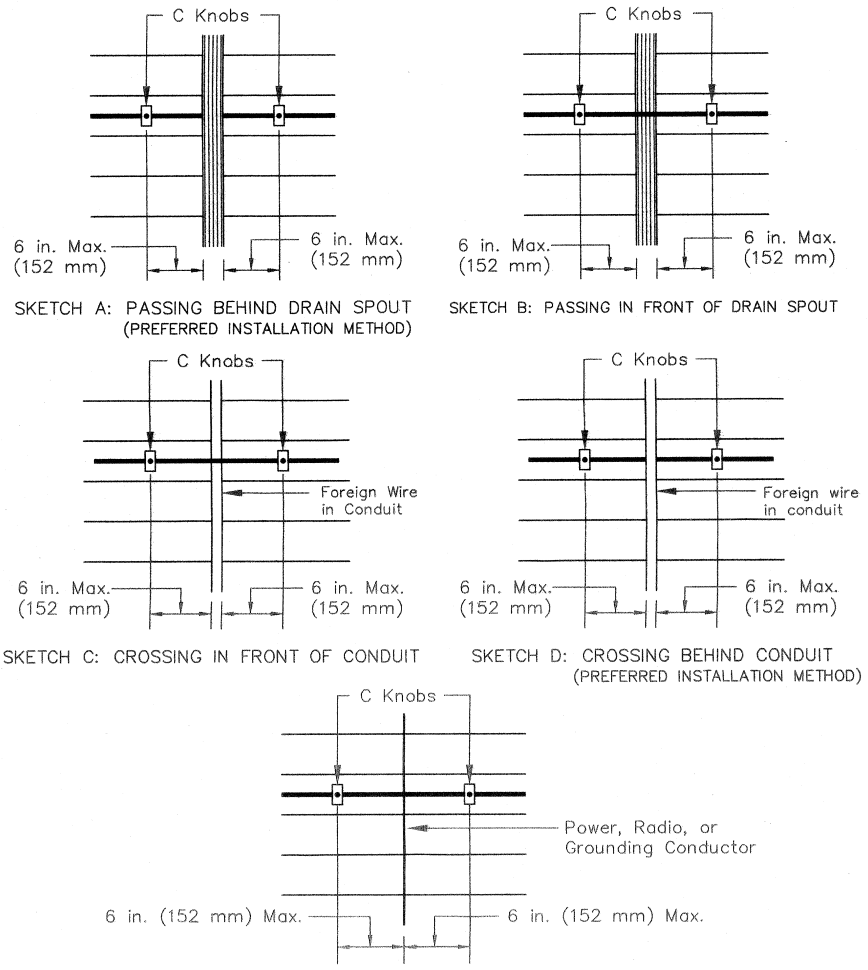

FIGURE 5

AERIAL SERVICE WIRE CROSSING OBSTRUCTIONS
MASONRY BUILDING SURFACES

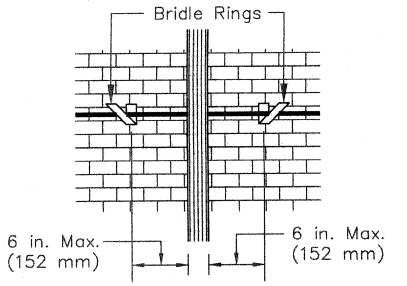

SKETCH A: PASSING BEHIND DRAIN SPOUT
(PREFERRED INSTALLATION METHOD)

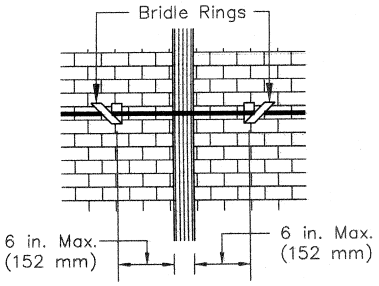

SKETCH B: PASSING IN FRONT OF DRAIN SPOUT

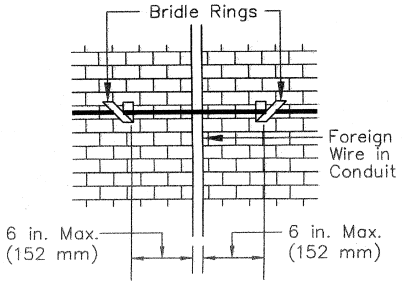

SKETCH C: CROSSING IN FRONT OF CONDUIT

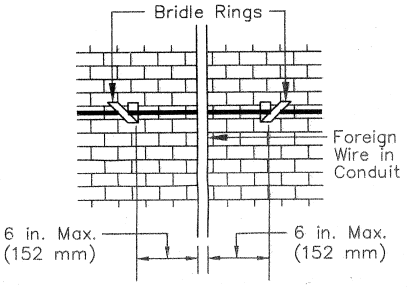

SKETCH D: CROSSING BEHIND CONDUIT
(PREFERRED INSTALLATION METHOD)

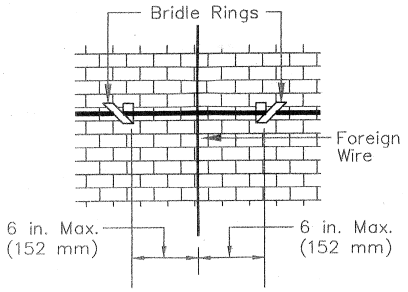

SKETCH E: PASSING BEHIND FOREIGN WIRE
(PREFERRED INSTALLATION METHOD)

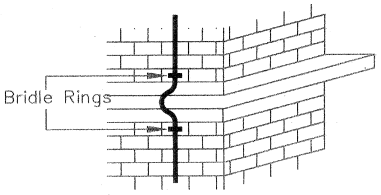

SKETCH F: MASONRY BUILDING PROJECTIONS

FIGURE 6

AERIAL SERVICE WIRE CROSSING COMBUSTIBLE BUILDING PROJECTIONS

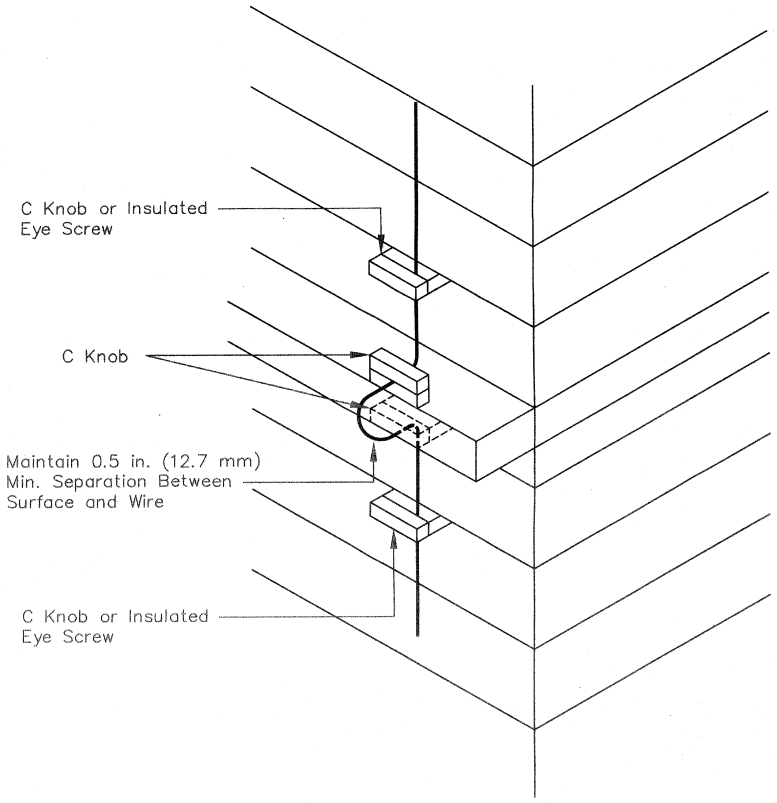

(ii) In areas where ice and snow conditions are severe, aerial service wires shall be located so that ice and snow falling from the roof will not strike the wires. However, where aerial service wires must pass under the sloping part of the roof, first attachments shall be made as close as practicable to the eaves.

(jj) If two aerial service wire spans are required to the same building, the first attachment shall be such that both aerial service wires can be attached at the same attachment device. Refer to construction drawing 508–1 contained in § 1755.510. Where more than two aerial service wires are required, additional attachment devices

in the same general location on the building shall be used.

(kk) When two or more aerial service wire runs are required on the same building they shall share the same type of attachment devices.

(ll) Aerial service wire entrances to buildings shall conform to sketch B of construction drawing 510–2 contained in § 1755.510, unless the entrance is made through a conduit.

(mm) When the aerial service wire approaches the entrance hole from above, a 1.5 in. (40 mm) minimum drip loop shall be formed in accordance with sketch B of construction drawing 510–2 contained in § 1755.510.

(nn) If an entrance conduit which slopes upward from outside to inside is available and suitably located, it shall be used for the aerial service wire entrance.

[66 FR 43317, Aug. 17, 2001, as amended at 69 FR 18803, Apr. 9, 2004]

§ 1755.507 Aerial cable services.

(a) Where more than six pairs are needed initially, and where an aerial service is necessary, the service shall consist of 22 AWG filled aerial cable of a pair size adequate for the ultimate anticipated service needs of the building. The cable shall comply with the requirements of § 1755.390, RUS specification for filled telephone cables, and shall be RUS accepted or RUS technically accepted.

(b) Aerial cable services shall be constructed in accordance with specific installation specifications prepared by the RUS borrower or the engineer delegated by the borrower.

(c) Unless otherwise specified in the installation specifications, aerial cable service installations shall meet the following requirements:

(1) Strand supported lashed construction shall be used.

(2) Where practicable a 5/16 in. (8 mm) utility grade strand and automatic clamps shall be used in slack spans to avoid damage to the building.

(3) Construction on poles shall comply with applicable construction drawings for regular line construction. Aerial service cable shall be spliced to the main cable in accordance with § 1755.200, RUS standard for splicing copper and fiber optic cables.

(4) Where practicable, aerial cable shall pass under electrical guys, distribution secondaries, and services.

(5) The suspension strand shall be attached to the building by wall brackets as indicated in Figure 7 as follows:

FIGURE 7

SUSPENSION STRAND DEADENDING ON BUILDINGS

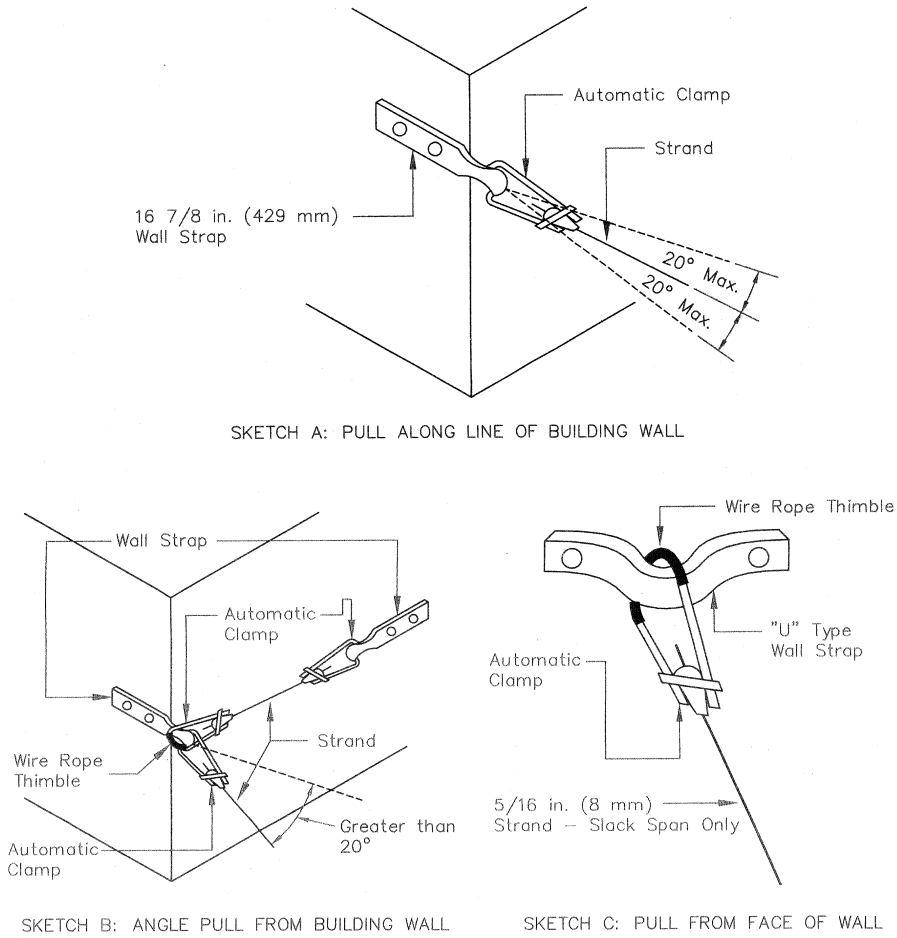

(i) If taut spans are necessary, appropriate size strand may be used if the pull is in line with one wall of the building, or within 20 degrees of being in line as illustrated in sketch A of Figure 7. If the angle of pull is greater than 20 degrees from the building, the wall bracket shall be reinforced against pullout by an arrangement equivalent to sketch B of Figure 7. Taut spans may be strung using the recommendations in RUS Bulletin 1751F–630, Design of Aerial Plant. The same tension as would be used in normal line construction so as not to exceed 60 percent of the breaking strength of the strand under maximum loading shall be used. Taut spans shall

not exceed 100 ft (30.5 m) in length and the cable weight shall not exceed 1 pound/foot (lb/ft) [1.5 kilogram/meter (kg/m)] except when equivalent combinations of greater span lengths with cable weight less than 1 lb/ft (1.5 kg/m) are permissible. Copies of RUS Bulletin 1751F–630 are available upon request from RUS/USDA, 1400 Independence Avenue, SW., STOP 1522, Washington, DC 20250–1522, FAX (202) 720–4120.

(ii) When an attachment must be made to the face of a building wall away from a corner, a ''U'' type wall bracket shall be used as indicated in sketch C of Figure 7. Only slack span construction with 5/16 in. (8 mm) utility grade strand shall be permitted in this situation. The bail of the automatic clamp shall be protected by a wire rope thimble.

(6) Aerial cable shall be located on the rear or side of the building and shall be run only in a horizontal or a vertical direction. The cable route shall be selected so as to avoid building projections and obstructions to the extent practicable.

(7) Cable attachment devices shall be located on solid masonry or on studs of wood frame buildings. Cable attachment devices may be installed on sheet surface materials only when such materials are reinforced with a backing material which allows penetration and firm holding of the attachment devices through the backing material.

(8) The minimum separation on or in buildings between cable and other facilities shall be as indicated in § 1755.505(f)(8), Table 1.

(9) On horizontal runs, cable clamps shall be placed so that the attachment is below the cable. On vertical runs, cable clamps shall be placed so that the attachment is on the same side as horizontal runs. Cable clamps shall be placed on the inside of cable bends.

(10) On horizontal runs, cable clamps shall be placed not more than 16 in. (400 mm) apart for cable diameters equal to or greater than 1 in. (25.4 mm) and 24 in. (600 mm) apart for cable diameters less than 1 in. (25.4 mm).

(11) On vertical runs, cable clamps shall be approximately 24 in. (600 mm) apart for all sizes of cable.

(12) For the cable entrance, holes shall be bored slightly larger in diameter than the cable and shall slope upward from outside to inside. A duct sealer having RUS acceptance or RUS technical acceptance shall be applied to both ends of the hole after the cable is pulled in.

(13) Section 1755.505(g) and (h) shall also apply to aerial cable services.

[66 FR 43317, Aug. 17, 2001]

§ 1755.508 Customer access location protection.

(a) All customer access locations shall be protected.

(b) Customer access location protection shall consist of installing the telecommunications facilities with proper clearances and insulation from other facilities, providing primary voltage limiting protection, fuse links, NIDs, BETs, or fused primary station protectors, if required, and adequate bonding and grounding.

(c) All NIDs shall be RUS accepted or RUS technically accepted or the RUS borrower shall obtain RUS regional office approval on a case by case basis as applicable.

(d) All BETs shall be RUS accepted or RUS technically accepted.

(e) All fused primary station protectors shall be RUS accepted or RUS technically accepted.

(f) NIDs, BETs, or fused primary station protectors shall be mounted outside for all applications except for those described in paragraphs (g)(1) through (g)(3) of this section.

(g) NIDs, BETs, or fused primary station protectors may be mounted inside when:

(1) Large buildings are to be served and the customer requests an inside installation;

(2) Buried alarm circuits are requested by the subscriber; or

(3) The customer requests an all buried installation for appearance or to prevent the drilling of holes in aluminum or vinyl siding.

(h) Outside mounted NIDs, BETs, or fused primary station protectors shall be easily accessible and shall be located between 3 to 5 ft (1 to 1.5 m) above final grade.

(i) The locations of NIDs, BETs, or fused primary station protectors shall be selected with emphasis on utilizing the shortest primary station protector

grounding conductor practicable and on grounding of the telecommunications primary station protector to the electric service grounding system established at the building served utilizing electrodes (c) through (g) cited in section 800–40(b)(1) of ANSI/NFPA 70–1999, *NEC®*. The *National Electrical Code®* and *NEC®* are registered trademarks of the National Fire Protection Association, Inc., Quincy, MA 02269. The ANSI/NFPA 70–1999, *NEC®*, is incorporated by reference in accordance with 5 U.S.C. 552(a) and 1 CFR part 51. Copies are available from NFPA, 1 Batterymarch Park, P. O. Box 9101, Quincy, Massachusetts 02269–9101, telephone number 1 (800) 344–3555. Copies of ANSI/NFPA 70–1999, *NEC®*, are available for inspection during normal business hours at RUS, room 2905, U.S. Department of Agriculture, 1400 Independence Avenue, SW., STOP 1598, Washington, DC 20250–1598, or at the National Archives and Records Administration (NARA). For information on the availability of this material at NARA, call 202–741–6030, or go to: *http://www.archives.gov/federal_register/code_of_federal_regulations/ibr_locations.html*.

(j) If access to the building electric service grounding system, as referenced in paragraph (i) of this section, is not possible or is not reasonable (telecommunications primary station protector grounding conductor will be longer than 10 ft (3 m)), the NID, BET, or fused primary station protector shall be located as close as practicable to electrodes (a) or (b) cited in section 800–40(b)(1) of ANSI/NFPA 70–1999, *NEC®*.

(k) In addition, the NID, BET, or fused primary station protector shall be located in, on, or immediately adjacent to the structure or building to be served as close as practicable to the point at which the telecommunications service wire attaches to the building, making sure that the telecommunications primary station protector grounding conductor is connected to the closest, existing, and accessible electrode, of the electrodes cited in paragraph (i) or (j) of this section.

(l) For the preferred customer access location installation, the ANSI/NFPA 70–1999, *NEC®*, permits the telecommunications grounding conductor to be connected to the metallic conduit, service equipment closure, or electric grounding conductor as shown in Figure 8 of paragraph (l)(2) of this section.

(1) Connections to metallic conduits shall be made by ground straps clamped over a portion of the conduit that has been cleaned by sanding down to bare metal.

(2) Connections to metallic service equipment closures shall be made by attaching a connector which is listed for the purpose by some organization acceptable to the local authority (State, county, etc.) per article 100 of ANSI/NFPA 70–1999, *NEC®*, definition for ''Listed'' (for example connectors listed for the purpose by Underwriters Laboratories (UL)). Figure 8 is as follows:

FIGURE 8

GROUNDING OF TELECOMMUNICATIONS SERVICE TO ELECTRIC SERVICE (PREFERRED METHOD)

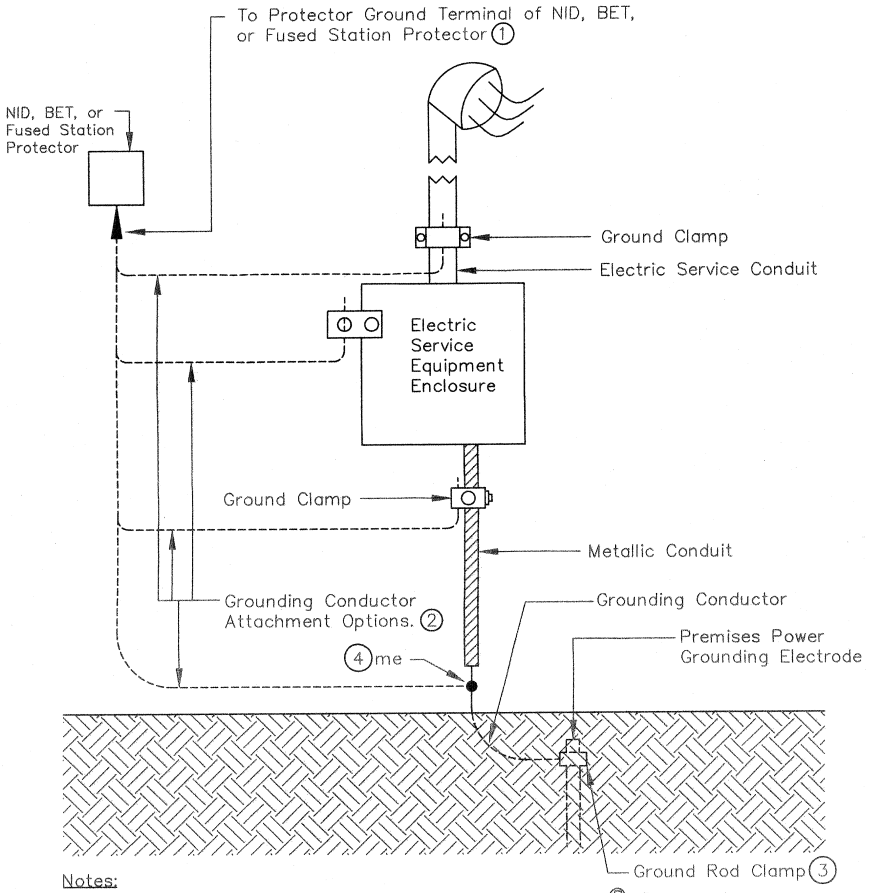

Notes:

1. See Section 800–40(a) of ANSI/NFPA 70–1999 NEC® 2. Select one of the attachment options shown above for the installation. 3. Clamp must be accepted by Listing Agency (UL, etc.). 4. Connector (Item "me") must be accepted by a Nationally recognized testing laboratory.

(m) Where it is not possible to accomplish the objective of paragraphs (i), (j), and (k) of this section, interior metallic pipes may be used to the maximum practicable extent to gain access to the electric service ground as shown in Figure 9. Note that the water pipe in Figure 9 is electrically continuous between electric and telecommunications bonds to the cold water pipe and it is used only as a portion of a bonding conductor and, therefore, does not have to be ''acceptable'' as a ground electrode but may be floating (isolated from ground by a plastic pipe section). ANSI/NFPA 70–1999, *NEC®*, requires that metal piping be used as a bonding conductor in this manner only when

the connectors to the pipe are within 1.5 m (5 ft) of where the pipe enters the premises. This is not the preferred installation. The RUS preferred installation has the telecommunications primary station protector grounded directly to an accessible location near the power grounding system. See paragraph (l) of this section. Figure 9 is as follows:

FIGURE 9

ALTERNATIVE TECHNIQUE FOR BONDING TO ELECTRIC SERVICE GROUND WHERE DIRECT ATTACHMENT IS NOT POSSIBLE

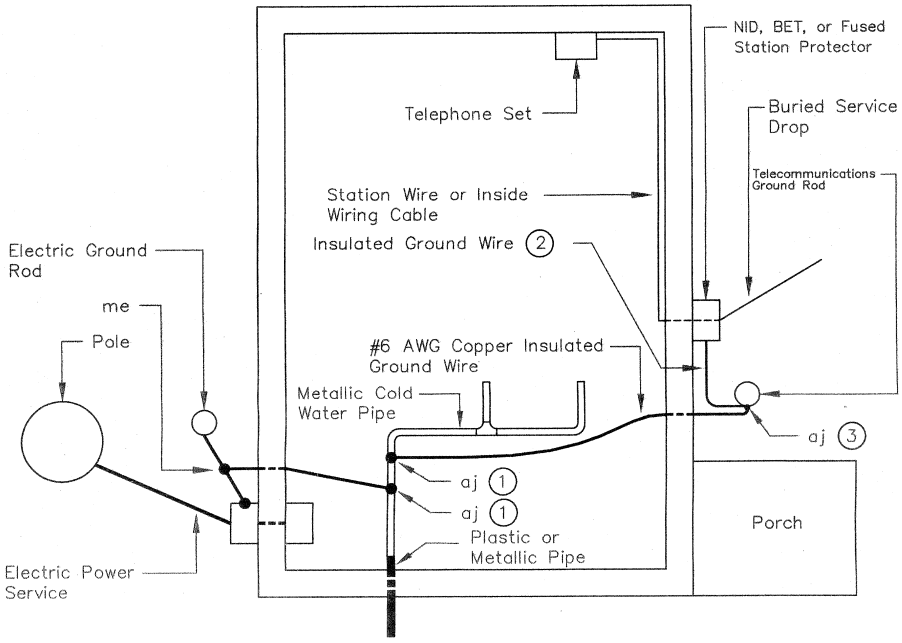

Notes:

(1.) Both electric and telephone "aj" connectors attached to the cold water pipe shall be within 5 ft (1.5 m) of where the pipe enters the premises.

(2.) Refer to Section 1755.508, Paragraph (v), Table 5 for the ground wire conductor size. Ground wire must be accepted by a Nationally recognized testing laboratory.

(3.) Connector "aj" must be accepted by a Nationally recognized testing laboratory.

(n) Where the telecommunications premises system at a customer's access location is grounded to a separate electrode (of any type) this telecommunications grounding electrode must be bonded to the electric grounding system with a No. 6 AWG or larger copper insulated grounding conductor. Bonding of separate electrodes is a requirement of the ANSI/NFPA 70–1999, *NEC*®.

(o) The NID, BET, or fused primary station protector pair size shall be selected for the number of lines anticipated within five years.

(p) When lightning damage is considered probable or customer access locations are remote from the borrower's headquarters, use of maximum duty gas tube primary station protectors incorporated in NIDs, BETs, or fused primary station protectors should be considered. (See RUS TE&CM 823, Electrical Protection by Use of Gas Tube Arresters). Copies of RUS TE&CM 823 are available upon request from RUS/USDA, 1400 Independence Avenue, SW., STOP 1522, Washington, DC 20250–1522, FAX (202) 720–4120.

(q) NIDs or BETs incorporating fuseless station protectors shall always be used in preference to fused station protectors or BETs incorporating fused protectors, when in the judgment of the RUS borrower or the engineer delegated by the RUS borrower, the requirements of ANSI/NFPA 70–1999, *NEC*®, for fuseless station protectors can be met.

(r) A fuse link consisting of a copper conductor two gauges (AWG) finer (numerically higher) conductivity than the aerial service wire shall be provided between the cable and aerial service wire where NIDs or BETs incorporating fuseless station protectors are used. Thus for a 22 AWG drop, a fuse link of No. 24 AWG or finer copper wire shall be provided. If the cable circuit is No. 24 gauge or finer, the cable conductors serve as the fuse link for the 22 AWG aerial service wire and no separate fuse link is necessary. (Note: The fuse link or the facilities serving as the fuse link must be located between the telecommunications facilities that are exposed to possible power cross and the customer drop where there is no exposure to possible power cross.)

(s) RUS's buried plant practices require buried main line plant to be protected against power contacts to aerial plant extensions and aerial inserts by No. 24 AWG fuse links at every buried-aerial junction.

(t) In aerial cable plant, fuse links are usually provided by No. 24 AWG leads on filled terminal blocks regardless of the gauge of the cable conductors. This practice is acceptable if the ampacity of the aerial service wire is sufficiently higher than the fuse link's ampacity.

(u) The grounding and bonding of each NID, BET, or fused primary station protector shall be selected by consulting paragraphs (i) through (n) of this section. The ''first choice'' assembly unit shall be selected whenever the prevailing conditions make its use practicable. The NID, BET, or fused primary station protector assembly unit selected shall be installed in accordance with the appropriate construction drawing specified in RUS Bulletin 1753F–153 (RUS Form 515d), Specifications and Drawings for Service Installations at Customer Access Locations (Incorporated by reference at §1755.97). Copies of RUS Bulletin 1753F–153 are available upon request from RUS/USDA, 1400 Independence Avenue, SW., STOP 1522, Washington, DC 20250–1522, FAX (202) 720–4120.

(v) The minimum size grounding conductor that can be used with a single NID; a group of NIDs; a multipair NID; fused protector; or BET shall be in accordance Table 5, as follows:

TABLE 5—GROUNDING CONDUCTOR SIZE VERSUS NUMBER OF CIRCUITS

Minimum grounding conductor size	Number of circuits	
	Fuseless (carbon or gas tube)	Fused
#12 AWG, copper, insulated	1 to 2	1 to 3.
#10 AWG, copper, insulated	3 to 5	4 to 7.
#6 AWG, copper, insulated	6 or more	8 or more.

(w) Grounding conductor runs between the NID, BET, or fused station protector and the ground electrode shall conform to the following:

(1) The shortest, most direct route practicable shall be used;

(2) Sharp bends in the grounding conductor shall be avoided during installation;

(3) No splices shall be made in the grounding conductor;

(4) Grounding conductors shall not be fished through walls, under floors, or placed in bridle rings or any metal conduit unless the grounding conductor is bonded to the conductor at both ends of the metallic conduit;

(5) Grounding conductor runs from an outside mounted NID, BET, or fused station protector to an inside ground electrode shall use the same entrance as the station wire; and

(6) Grounding conductor runs from an outside mounted NID, BET, or fused station protector to an outside ground electrode at the building shall be attached to the exterior surface of the building or buried. If buried, the grounding conductor shall be either plowed or trenched to a minimum depth of 12 in. (300 mm). When trenched, the trenches shall be as close to the side of the building as practicable, backfilled, and tamped to restore the earth to its original condition.

(x) Telecommunications grounding connectors shall be RUS accepted or RUS technically accepted. Grounding and bonding conductors shall be made of copper. Where the grounding and bonding conductors must be connected to aluminum electric service grounding conductors, bimetal grounding connectors shall be used.

(y) Grounding conductor attachments shall conform to the following:

(1) Galvanized nails or clamps, or nickel-copper alloy staples shall be used for grounding conductor attachments in accordance with Table 6 in paragraph (y)(3) of this section;

(2) Grounding conductors, station or buried service wires in parallel runs may share the same fastening device when the device is specifically designed for two wires. See Table 6 in paragraph (y)(3) of this section for station wire and grounding conductor fasteners; and

(3) Grounding conductor fasteners shall be placed 12 to 18 in. (300 to 450 mm) apart on straight runs and 2 to 4 in. (50.8 to 100 mm) apart at corners and at bends. Table 6 is as follows:

Table 6

TYPICAL FASTENING DEVICES FOR STATION WIRES AND GROUNDING CONDUCTORS (9)

TYPE AND GAUGE OF WIRE		APPROX. OVERALL DIAMETER	TYPES OF FASTENING DEVICES FOR VARIOUS TYPES OF BUILDINGS OR WALL FINISHES						
			Hard Woods	Soft Woods	Wallboard, Plaster on Wood, or Metal Lath, or Concrete Block(3)	Brick, Stone or Concrete(3)	Shingles and Siding(4)	Sheet Metal(5)	Wall Tile(3)
#22 AWG Station Wire		.125 in. to .155 in.	A1, D7, E1, F1, G1	A2, A3, D8, E2, F2, G2	D8, D9, E2, E3, G2, G3	D8, E2, G2	A2, A3, D7, D8, E2, F2	D7, D8, D9, G1, G2, G3, H1	D8, D9, E2, E3, G2, G3, H1
GROUNDING CONDUCTOR	#10 AWG Insulated Wire	.168 in.	A1, B1, D1	A2, A3, B1, B2, D2	B2, D2, D3	B2, D2	A2, A3, B1, B2, D1, D2	D1, D2, D3, H2	B2, D2, D3, H2
GROUNDING CONDUCTOR	#12 AWG Insulated Wire	.127 in.	A1, B1, C1, E1, F1, D7, G1	A2, B1, B2, C1, C2, D8, E2, F2, G2	B2, C2, C3, D8, D9, E2, E3, G2, G3	B1, B2, C2, D8, E2, E3, G2	A2, A3, B1, B2, C1, C2, D8, E2, F2, G2	C1, C2, C3, D7, D8, D9, E1, E2, E3, G1, G2, G3, H1	B2, B3, C3, D8, D9, E2, E3, G2, G3, H1
GROUNDING CONDUCTOR	#6 AWG Insulated Wire	.290 in.	A2, A3, B1, D4	A3, B2, D5	B2, D5, D6	B2, D5	A3, B2, D5	D4, D5, D6, H3	B2, D5, D6, H3

EXPLANATION OF FASTENER CODES

A. Staple Machine, Round Crown, Interior Use Only – (Note 6)

1. 3/16" or 1/4" Crown – 3/8" Leg
2. 3/16" or 1/4" Crown – 7/16" or 9/16" Leg
3. 3/16" or 1/4" Crown – 9/16" Leg

B. Nail, Ground Wire, Single Shank Galvanized, Interior and Exterior Use

1. 7/8" #14
2. 1–3/8" #13

C. Clamp, Ground Wire, One Hole, Galvanized, Interior and Exterior Use

1. Type B–1/2" x #6 RH Screw (1)
2. Type B–3/4" x #6 RH Screw (1)
3. Type B–1/8" x 3" Toggle Bolt (2)

D. Clamp, One Hole Offset, Galvanized or Enameled, Interior and Exterior Use – (Note 7)

Wire Size Min.	Wire Size Max.	Fasteners (1), (2)
1. 5/32"	to 7/32"	1/2" x #6 RH Screw
2. 5/32"	to 7/32"	3/4" x #6 RH Screw
3. 5/32"	to 7/32"	1/8" x 3" Toggle Bolt
4. 1/4"	to 5/16"	1/2" x #6 RH Screw
5. 1/4"	to 5/16"	1" x #6 RH Screw
6. 1/4"	to 5/16"	1/8" x 3" Toggle Bolt
7. 1/8"	to 5/32"	1/2" x #6 RH Screw
8. 1/8"	to 5/32"	3/4" x #6 RH Screw
9. 1/8"	to 5/32"	1/8" x 3" Toggle Bolt

E. Clamp, Station Wiring, One Hole, Galvanized or Enameled, Interior and Exterior Use – (Note 7)

1. Type B–1/2" x #6 RH Screw (1)
2. Type B–3/4" x #6 RH Screw (1)
3. Type B–1/8" x 3" Toggle Bolt (2)

F. Nail, Station Wiring, Galvanized or Enameled, Interior and Exterior Use – (Note 7)

1. Type B – 1/2"
2. Type B – 7/8"

G. Clamp, One Hole Double – (Note 8)

Wire Size Min.	Wire Size Max.	Fasteners
1. Two 1/8"	to 5/32"	3/4" x #6 RH Screw(1)
2. Two 1/8"	to 5/32"	1" x #6 RH Screw(1)
3. Two 1/8"	to 5/32"	1/8" x 3" Toggle Bolt(2)

H. Station Wire Clip, Adhesive Backed, Interior Use Only –

Wire Size

1. 1/8" Nominal
2. 3/16" Nominal
3. 1/4" Nominal

NOTES: 1. Screw dimensions are minimum. Where appropriate, either or both dimensions shall be increased. All wood screws for exterior use shall be stainless steel. All other exterior metal devices shall be stainless steel, zinc coated steel, silicon bronze, or corrosion resistant aluminum alloy.

2. Toggle bolt dimensions are minimum. Where appropriate, either or both dimensions shall be increased.

3. Wall screw anchors may be used in wall board, plaster or tile walls. Screws and nails in masonry shall be secured by means of expansions type anchors. Equivalent manual or machine-driven devices may be used. Where toggle bolts are specified, equivalent devices may be used.

4. Lead holes shall be drilled for screws, nails, and bridle rings in shingles and dropsiding.

5. Sheet metal screws shall be used except where toggle bolts are required. Where wood sheathing under sheet metal siding is encountered, the sheet metal may be drilled or punched and a wood screw used.

6. Machine-driven staples of nickel-copper composition may be used for exterior wiring.

7. Galvanized clamps and wiring nails may be used for exterior and interior wiring. Enameled clamps shall be used for interior wiring only. Where toggle bolts or equivalent devices require holes in the structure larger than the clamp being fastened, a suitable washer of sufficient size to cover the hole must be used under the clamp.

8. Double clamp may be used where two #22 AWG station wires, two #12 AWG grounding conductors, or one #22 AWG station wire and one #12 grounding conductor parallels one another.

9. For converting English units to Metric units use 1 in. = 25.4 mm.

(z) Grounding conductors shall be separated from non-telecommunications company wires in accordance with section 800–12(b) of ANSI/NFPA 70–1999, *NEC*®.

(aa) Grounding conductors run through metal conduits shall be bonded to the conduit at each end. RUS accepted and RUS technically accepted pipe type ground clamps and grounding connectors shall be used for bonding.

(bb) Where NID, BET, or fused station protector assembly units require grounding conductor connections to pipe systems, the following apply:

(1) The connection shall be made to a cold water pipe of an operating water system;

(2) The connection point shall be preferably inside the building;

(3) Allow a minimum of 6 in. (152 mm) between the last fastener and the point where the grounding conductor first touches the water pipe;

(4) Leave 2 in. (50.8 mm) of slack in the grounding conductor to avoid breaking the conductor at the terminating point. Tape the grounding conductor to the pipe where possible to avoid movement. In no case, shall the grounding conductor be coiled or wrapped around the pipe;

(5) The pipe shall be cleaned with fine sand paper to make a good electrical connection. Care should be taken to avoid damaging the pipe while cleaning it;

(6) Attach the pipe grounding conductor connector to the cleaned area of pipe and tighten. Care shall be exercised to avoid deforming, crushing, or otherwise damaging the pipe. A simple continuity check with an ohmmeter between the connector and the pipe will indicate whether or not a good electrical contact has been made. Set the ohmmeter to ''Rx1'' scale to ensure that a low resistance contact is made;

(7) A warning tag shall be attached to the ground clamp with the following or equivalent statement: ''Call the telecommunications company if this connector or grounding conductor is loose or must be removed;'' and

(8) When the water pipe is used, the ANSI/NFPA 70–1999, *NEC*®, requires that metal piping be used as a bonding conductor in this manner only when the connections to the pipe are within 5 ft (1.5 m) of where the pipe enters the premises.

(cc) Bonding conductors shall consist of either copper or tinned copper insulated wires of appropriate sizes.

(1) Bonding conductors shall be run and attached in the same manner as grounding conductors.

(2) Attaching and terminating devices for bonding conductors shall be adequate for the size of wire involved. The No. 6 AWG copper insulated conductor or larger shall not be terminated by bending it around a threaded stud.

(dd) Where NID, BET, or fused station protector assembly units require a driven ground rod the following shall apply to the ground rod installation:

(1) Locate the ground rod at least 1 ft (300 mm) from buildings, poles, trees and other obstruction;

(2) Ground rods shall not be installed within 6 ft (2 m) of electric service ground rods (Note: This minimum separation is provided to avoid mutual impedance effects of multiple grounding electrodes that will deleteriously degrade the effective impedance-to-earth if grounding electrodes are installed any closer than 6 ft (2 m) to one another. This requirement is included for cases where the telecommunications company is not allowed, for some reason, to observe the RUS preferred grounding method of attaching the primary protector grounding conductor directly to an accessible point on the

building electric service grounding system. RUS believes that if the primary protector location can be sited within 6 ft (2 m) of the electric service ground rod then the electric service ground rod could be used as the preferred telecommunications grounding electrode and a separate telecommunications ground rod is unnecessary);

(3) A hole, 15 in. (350 mm) deep and 6 in. (150 mm) in diameter, shall be dug at the location where the ground rod is to be driven;

(4) Where ''slip-on'' type ground rod clamps are used instead of ''clamp-around'' type clamps, the ground rod clamps shall be placed onto the rod prior to driving the rod into the ground (Note there should be one clamp for the NID, BET, or fused station protector grounding conductor and one clamp for the conductor required to bond the telecommunications ground rod to the electric grounding system). However, the clamp shall not be tightened until the rod is completely driven. The end of the rod shall be placed in the bottom of the hole and the rod shall be aligned vertically adjacent to one wall of the hole prior to driving. The rod shall be driven until its tip is 12 in. (300 mm) below final grade. The grounding conductor shall then be attached, the clamp shall be tightened, and hole backfilled. Clamps employed in this manner shall be suitable for direct burial and shall be RUS accepted or RUS technically accepted; and

(5) Where rods are manually driven, a large number of blows from a light hammer (4 lbs (1.8 kg)) shall be used instead of heavy sledgehammer type blows. This should keep the rod from bending.

(ee) Terminations on fuseless primary station protectors incorporated in NIDs and on fused primary station protectors shall be as shown in Figures 10, 11, 12, and 13 of paragraph (ee)(1) of this section, Figure 14 of paragraph (ee)(4) of this section, and Figure 15 of paragraph (ee)(6) of this section. The inner jackets of buried service wires and outer jackets of cables used as service drops shall be extended into the NID or the fused primary station protector. A 10 in. (250 mm) length of each spare wire shall be left in NIDs or fused primary station protectors. The spare wires shall be coiled up neatly and stored in the NID or fused primary station protector housing.

(1) The shields of buried service wires may be connected to the ground binding post using RUS accepted or RUS technically accepted buried service shield bond connectors as shown in Figure 10 for NIDs and Figure 11 for fused primary station protectors. RUS accepted or RUS technically accepted buried service wire harness wires designed for customer access location installations may also be used for terminating buried service wire shields to the ground binding post of the NID as shown in Figure 12 and Figure 13 for fused primary station protectors. Figures 10 through 13 are as follows:

FIGURE 10

BONDING BURIED SERVICE WIRE AT STATION PROTECTOR OF NID USING SERVICE WIRE SHIELD BOND CONNECTOR

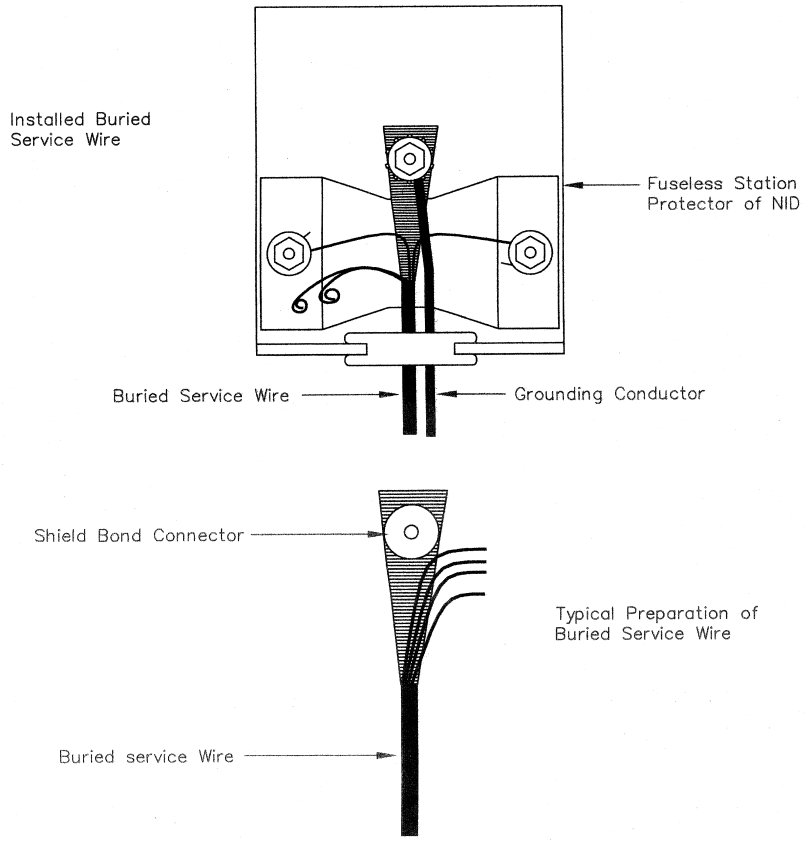

FIGURE 11

BONDING BURIED SERVICE WIRE AT FUSED STATION PROTECTOR USING SERVICE WIRE SHIELD BOND CONNECTOR

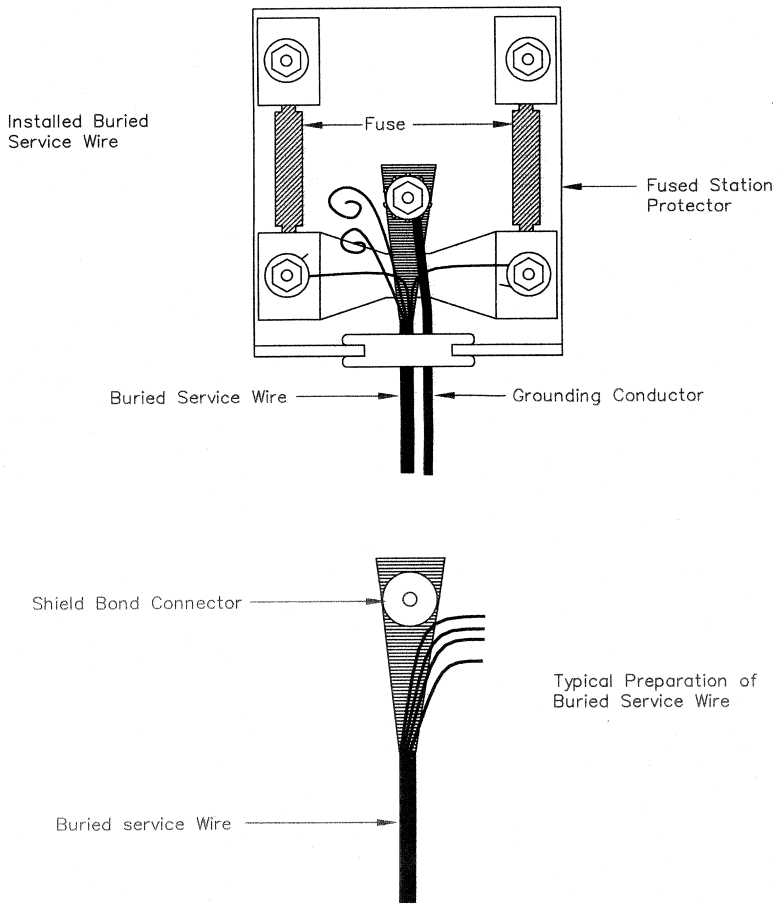

FIGURE 12

BONDING BURIED SERVICE WIRE AT STATION PROTECTOR OF NID USING SERVICE WIRE BONDING HARNESS

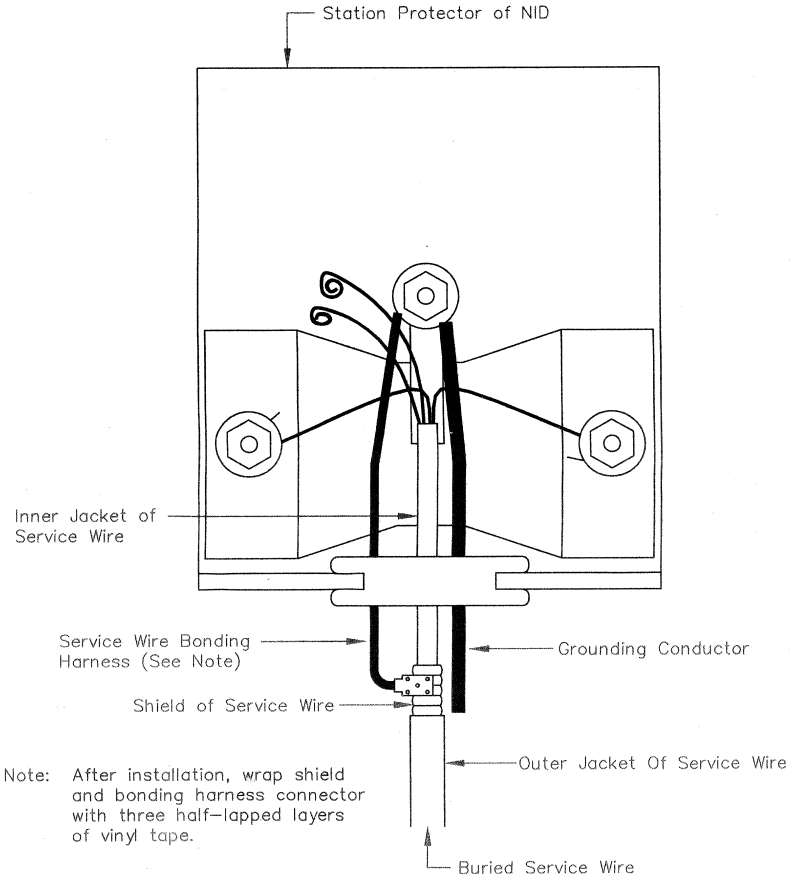

FIGURE 13

BONDING BURIED SERVICE WIRE AT FUSED STATION PROTECTOR USING SERVICE WIRE BONDING HARNESS

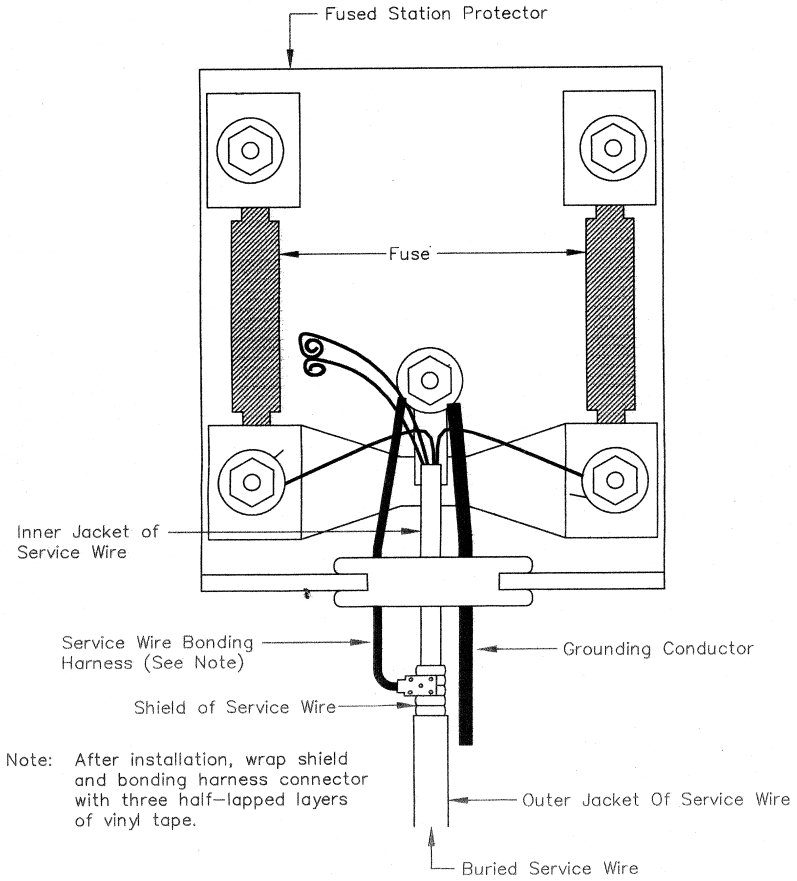

(2) On buried service drops and aerial service drops of more than 6 pairs using RUS accepted or RUS technically accepted cables, the shields shall be terminated with a RUS accepted or RUS technically accepted cable shield bonding connector and extended to the ground binding post of the NID, BET, or fused primary station protector with an RUS accepted or RUS technically accepted bonding harness wire. The installation of the shield bond connector and bonding harness wire shall be in accordance with the manufacturer's instructions.

(3) The shield and other conductors at the fuseless primary station protector incorporated in the NID shall be

terminated as shown on Figure 14 in paragraph (ee)(4) of this section. The pronged or cupped washer shall be placed above the shield. The grounding conductor shall be placed around the post on top of the pronged or cupped washer. A flat washer shall be placed above the grounding conductor.

(4) The station wire signaling ground conductor, if required, shall be placed above the first flat washer and beneath the second flat washer as indicated in Figure 14 as follows:

FIGURE 14

TERMINATION OF CONDUCTORS AND SHIELD ON STATION PROTECTOR BINDING POSTS OF NID

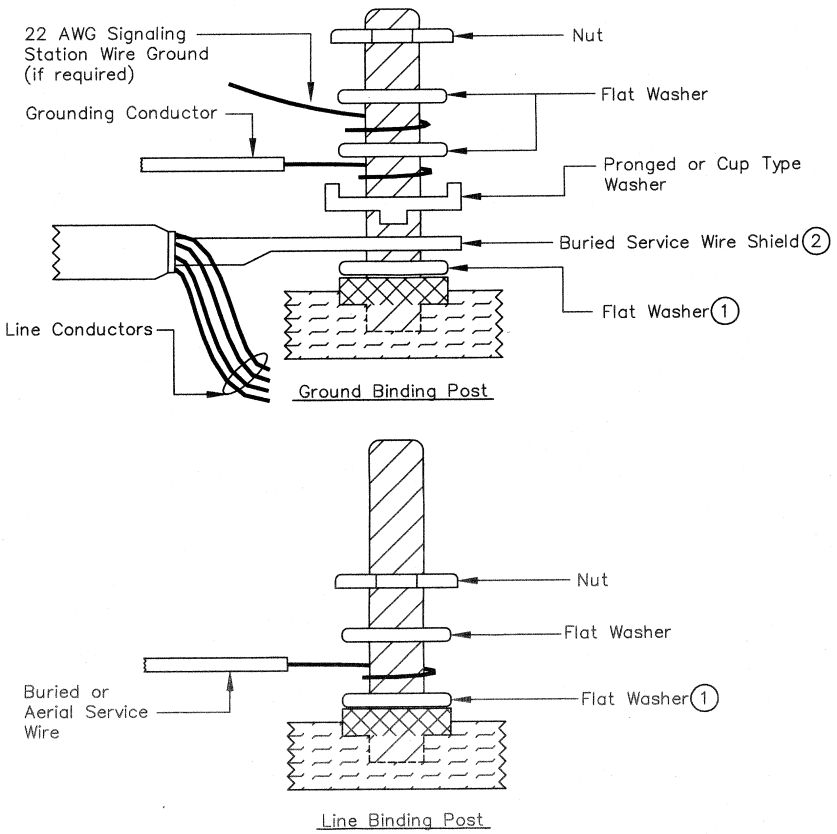

Notes:

(1.) If shoulder is inadequate to support shield or wire add a flat washer.

(2.) Terminate buried service wire shield with station protector grounding lug of NID in accordance with either Figure 10 or 12 of paragraph (ee)(1) of this section.

(5) The shield and other conductors at the fused primary station protector shall be terminated as shown on Figure 15 in paragraph (ee)(6) of this section. The pronged or cupped washer shall be placed above the shield. The grounding conductor shall be placed around the post on top of the pronged or cupped washer. A flat washer shall be placed above the grounding conductor.

(6) The station wire signaling ground conductor, if required, shall be placed above the first flat washer and beneath the second flat washer as indicated in Figure 15 as follows:

FIGURE 15

TERMINATION OF CONDUCTORS AND SHIELD ON FUSED STATION PROTECTOR BINDING POSTS

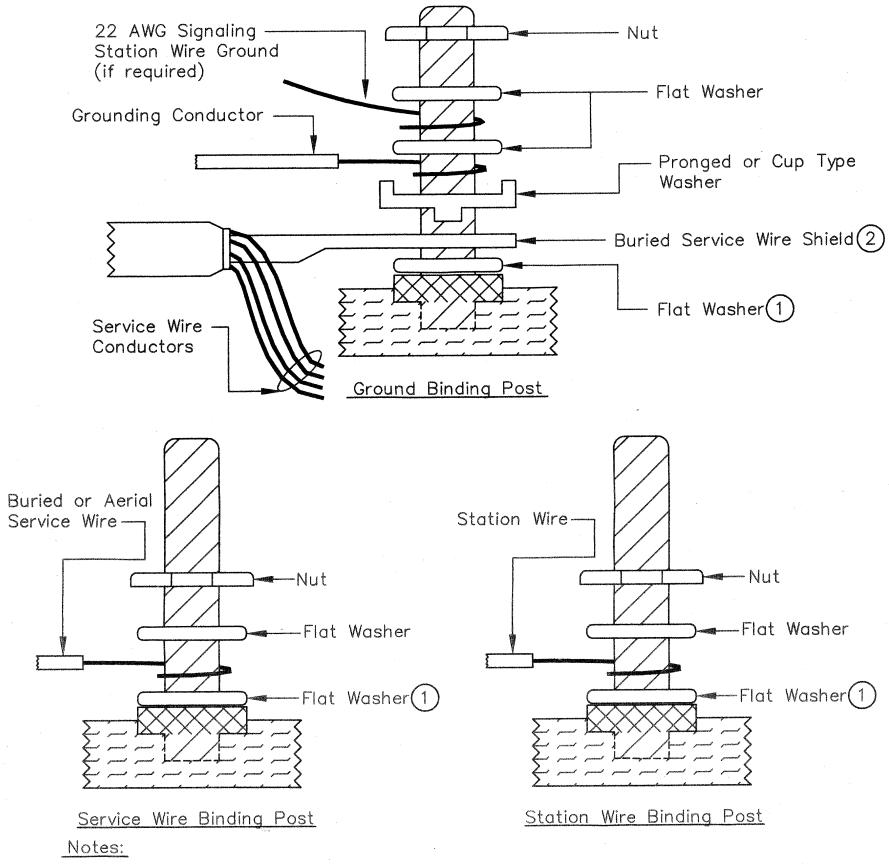

Notes:

(1.) If shoulder is inadequate to support shield or wire add a flat washer.

(2.) Terminate buried service wire shield on fused station protector grounding lug in accordance with either Figure 11 or 13 of paragraph (ee)(1) of this section.

(7) Indoor NIDs or BETs that are equipped with ''Quick Connect'' type terminals shall not have more than one wire connected per clip. No. 19 AWG copper and No. 18 AWG copper covered-steel reinforced aerial service wire conductors shall not be connected to quick connect terminals. Nonmetallic reinforced aerial service wire using No. 22 AWG copper conductors may be connected to the quick connect terminals.

(8) Tip and ring connections and other connections in multipair NIDs or BETs shall be as indicated in Figure 16 as follows:

FIGURE 16

MULTIPAIR NID OR BET TERMINAL CONNECTIONS CONTAINING FUSELESS STATION PROTECTORS

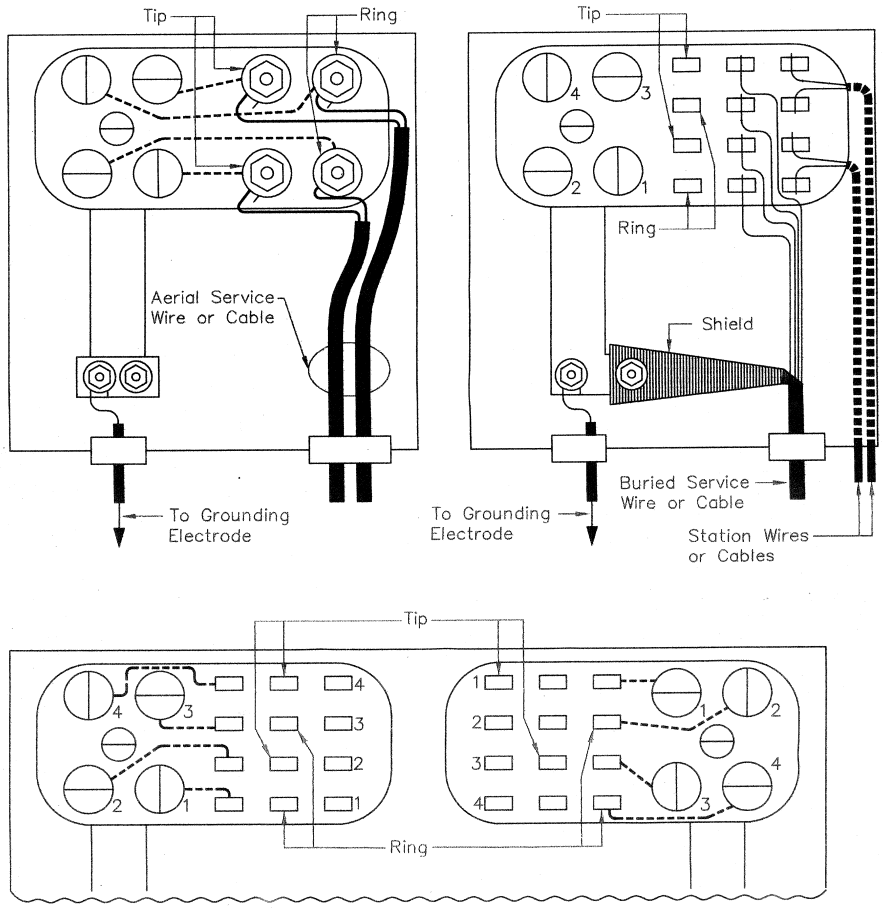

Note: #18 AWG copper–covered steel reinforced aerial service conductors shall not be connected to quick connect terminals. Nonmetallic reinforced aerial service conductors (#22 AWG copper) may be connected to quick connect terminals.

(ff) System polarity and conductor identification shall be maintained in NIDs, BETs, or fused primary station protectors in accordance with construction drawings 815 and 815–1 contained in § 1755.510.

[66 FR 43317, Aug. 17, 2001, as amended at 69 FR 18803, Apr. 9, 2004]

§ 1755.509 Mobile homes.

(a) Customer access location installations at mobile homes shall be treated the same whether the homes are mounted on permanent foundations or temporary foundations and shall be installed as specified in §§ 1755.500 through 1755.510. For the purpose of this section, mobile homes include manufactured homes, motor homes, truck campers, travel trailers, and all forms of recreational vehicles. Customer access location installations at mobile homes can be considerably different than customer access location installations at regular homes and borrowers shall be certain that the two types of installations are properly applied.

(b) The method of customer access location installation prescribed by the ANSI/NFPA 70–1999, *NEC*® for a mobile home depends on how the electric power is installed at the mobile home and it can involve considerable judgment on the part of the telecommunications installer. The *National Electrical Code*® and *NEC*® are registered trademarks of the National Fire Protection Association, Inc., Quincy, MA 02269. The ANSI/NFPA 70–1999, *NEC*®, is incorporated by reference in accordance with 5 U.S.C. 552(a) and 1 CFR part 51. Copies are available from NFPA, 1 Batterymarch Park, P. O. Box 9101, Quincy, Massachusetts 02269–9101, telephone number 1 (800) 344–3555. Copies of ANSI/NFPA 70–1999, *NEC*®, are available for inspection during normal business hours at RUS, room 2905, U.S. Department of Agriculture, 1400 Independence Avenue, SW., STOP 1598, Washington, DC 20250–1598, or at the National Archives and Records Administration (NARA). For information on the availability of this material at NARA, call 202–741–6030, or go to: *http://www.archives.gov/federal_register/code_of_federal_regulations/ibr_locations.html*. The ANSI/NFPA 70–1999, *NEC*®, requires primary station protectors to be located where specific acceptable grounding electrodes exist. The ANSI/NFPA 70–1999, *NEC*®, allows station protector installations to be at the location of the power meter or the electric disconnecting means apparatus serving the mobile home providing these electric facilities are installed in the manner specifically defined by the ANSI/NFPA 70–1999, *NEC*®. The ANSI/NFPA 70–1999, *NEC*®, requires the station protectors to be installed at the nearest of a number of other meticulously defined ANSI/NFPA 70–1999, *NEC*®, acceptable electrodes where the protector cannot be installed at the power meter or the electric disconnecting means apparatus serving the mobile home. The provisions can be confusing.

(c) NIDs shall be installed at mobile homes as follows:

(1) Where the mobile home electric service equipment (power meter, etc.,) or the electric service disconnecting means associated with the mobile home is located within 35 ft (10.7 m) of the exterior wall of the mobile homes it serves, the NID shall be installed in accordance with Figure 17 as follows:

FIGURE 17

NETWORK INTERFACE DEVICE (NID) INSTALLATION
ELECTRIC SERVICE EQUIPMENT WITHIN 35 FEET (10.7 METERS)
OF MOBILE HOME

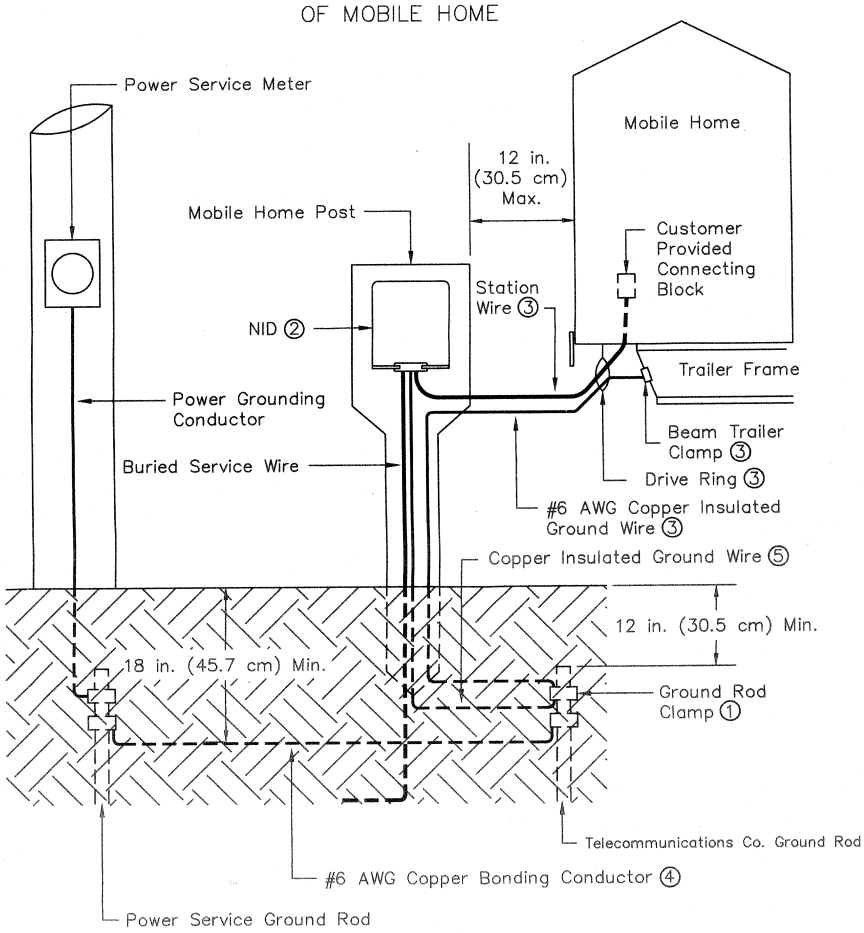

Notes: ① Clamp must be accepted by Listing Agency (UL, etc.) for two conductors, otherwise two clamps must be used. ② See Figure 19 of paragraph (e) of this section for NID terminations. ③ See Figure 20 of paragraph (e) of of this section for mobile home installation. ④ Bare if buried its entire length; insulated where human contact is possible. ⑤ See Section 1755.508, paragraph (v), Table 5 for the correct conductor size of the ground wire.

(2) Where the mobile home electric service equipment (power meter, etc.,) or the electric service disconnecting means associated with the mobile home is located more than 35 ft (10.7 m) from the exterior wall of the mobile homes it serves, the NID shall be installed in accordance with Figure 18 as follows:

FIGURE 18

NETWORK INTERFACE DEVICE (NID) INSTALLATION
ELECTRIC SERVICE EQUIPMENT MORE THAN 35 FEET (10.7 METERS)
FROM MOBILE HOME

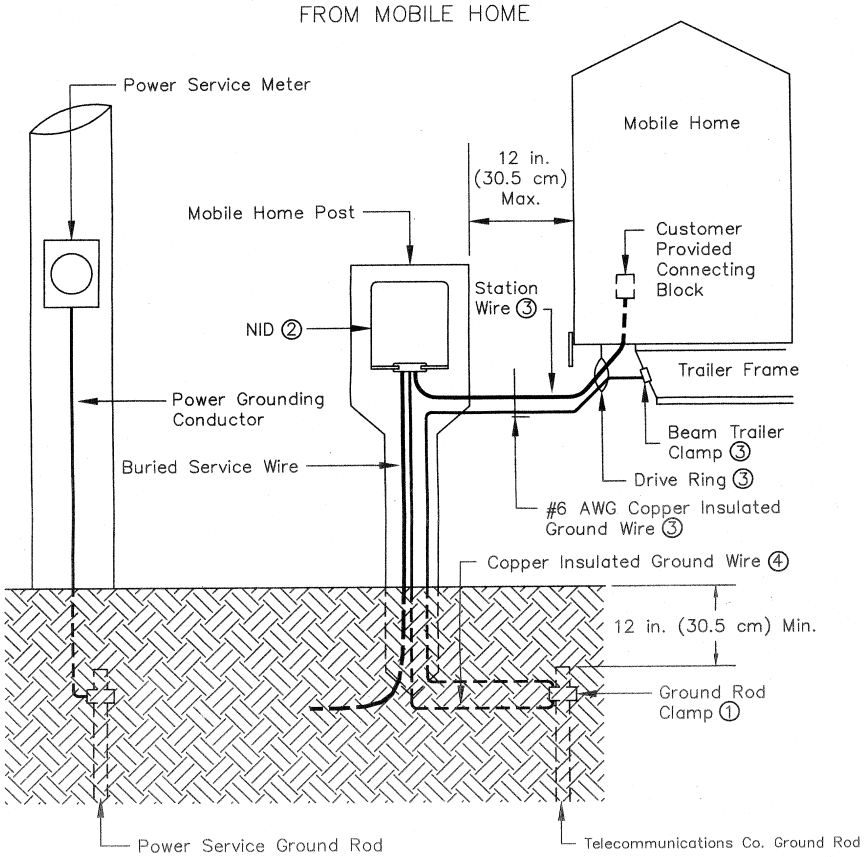

Notes: ① Clamp must be accepted by Listing Agency (UL, etc.) for two conductors, otherwise two clamps must be used. ② See Figure 19 of paragraph (e) of this section for NID terminations. ③ See Figure 20 of paragraph (e) of this section for mobile home installation. ④ See Section 1755.508, paragraph (v), Table for the correct conductor size of the ground wire.

(d) The service wire and station wire shall be terminated in the NID in accordance with Figure 19 in paragraph (e) of this section.

(e) Installation of the station wire and grounding conductor at the mobile home shall be in accordance with Figure 20. Figures 19 and 20 are as follows:

FIGURE 19

NID TERMINATIONS

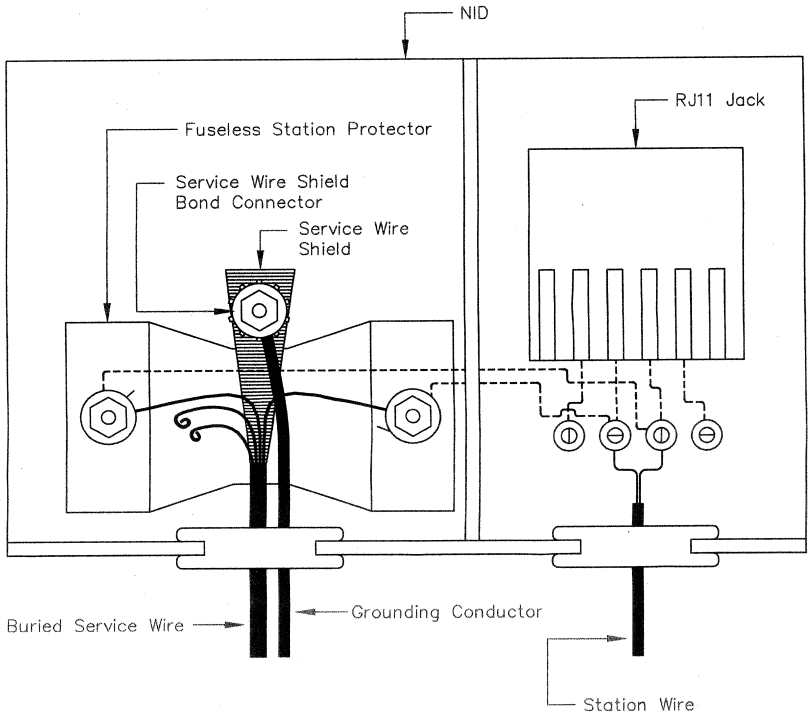

FIGURE 20

MOBILE HOME INSTALLATION

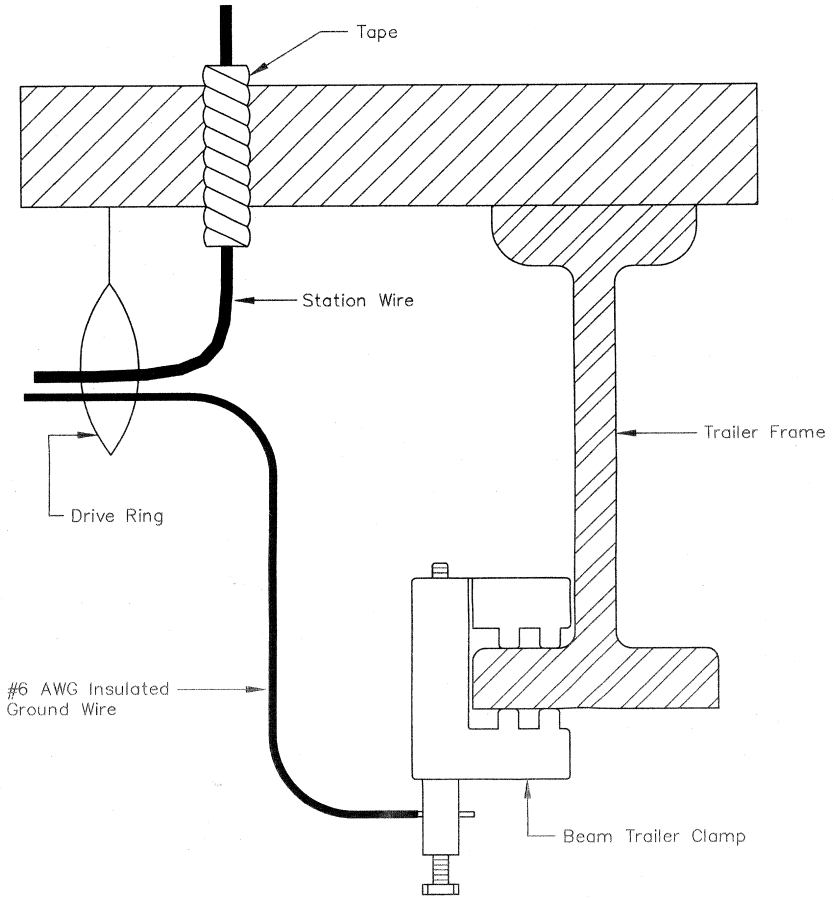

[66 FR 43317, Aug. 17, 2001, as amended at 69 FR 18803, Apr. 9, 2004]

§ 1755.510 Construction and assembly unit drawings.

(a) The construction and assembly unit drawings in this section shall be used by borrowers to assist the installer in making the customer access location installations.

(b) The asterisks appearing on the construction drawings indicate that the items are no longer listed in the RUS Informational Publication (IP) 344–2, ''List of Materials Acceptable for Use on Telecommunications Systems of RUS Borrowers.'' RUS IP 344–2 can

be obtained from the Superintendent of Documents, P. O. Box 371954, Pittsburgh, PA 15250–7954, telephone number (202) 512–1800.

(c) Drawings BM50, BM83, 312–1, 501–1, 501–2, 503–2, 504, 505, 506, 507, 508–1, 510, 510–1, 510–2, 513, 815, 815–1, 958, and 962 are as follows:

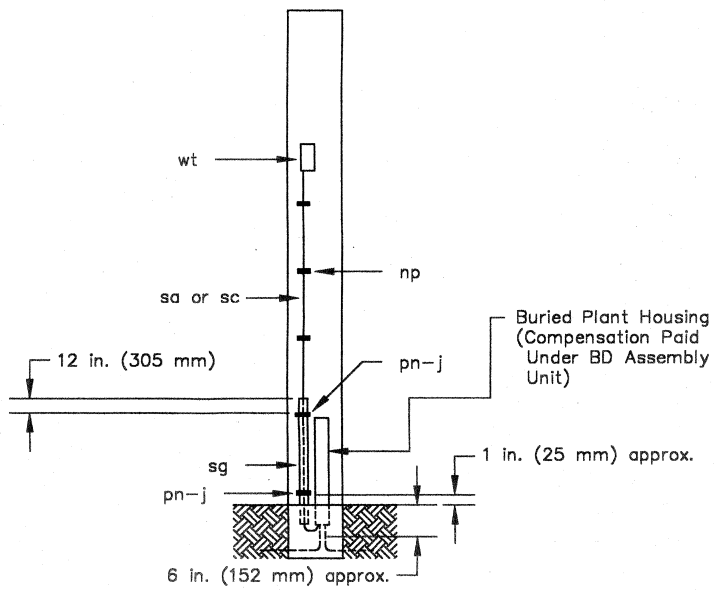

ITEMS	MATERIALS	NO. REQ'D
wt	Terminal, wire, filled, unprotected, pole–mounted (specify pair size)	1
*pn	Strap, riser guard	2
*np	Clamp, one–hole, offset	as req'd
sa or sc	Wire or cable, filled, buried	as req'd
sg	Guard, riser, 1 in. ID by 8 ft (25 mm ID by 2.4 m)	as req'd
j	Screws, lag (size as required)	4

RURAL TELECOMMUNICATIONS CONSTRUCTION PRACTICES
BURIED SERVICE WIRE OR CABLE INSTALLATION
TO POLE–MOUNTED WIRE TERMINAL

Scale: NTS | March 2001

BM50

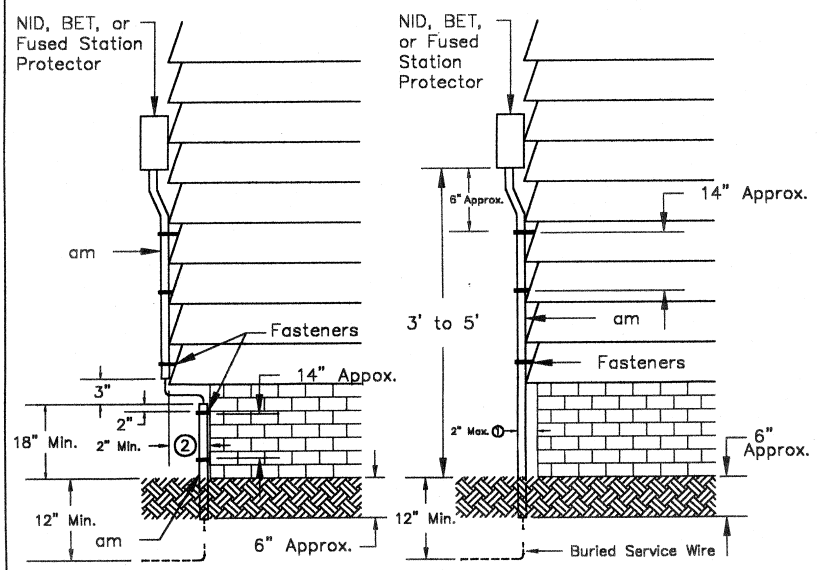

Notes:

1. Where an obstruction of less than 2 in. is encountered, the buried service guard (item am) shall extend from the NID, BET, or fused protector to 6 in. below the ground.

2. Where an obstruction of greater than 2 in. is encountered, the buried service guard (item am) shall be divided as shown (from the NID, BET, or fused protector to the obstruction, and from 3 in. below the obstruction to 6 in. below the ground). In lieu of divided service guards (item am), a continuous flexible conduit may be used from the NID, BET, or fused protector to 6 in. below the ground.

3. For converting English units to metric units use 1 in. = 25.4 mm and 1 ft = 0.3048 m.

ITEM	MATERIAL	NO. REQ'D
am	Guard, buried service (including fasteners)	1

RURAL TELECOMMUNICATIONS CONSTRUCTION PRACTICES
BURIED SERVICE GUARD

Scale: NTS | March 2001

BM83

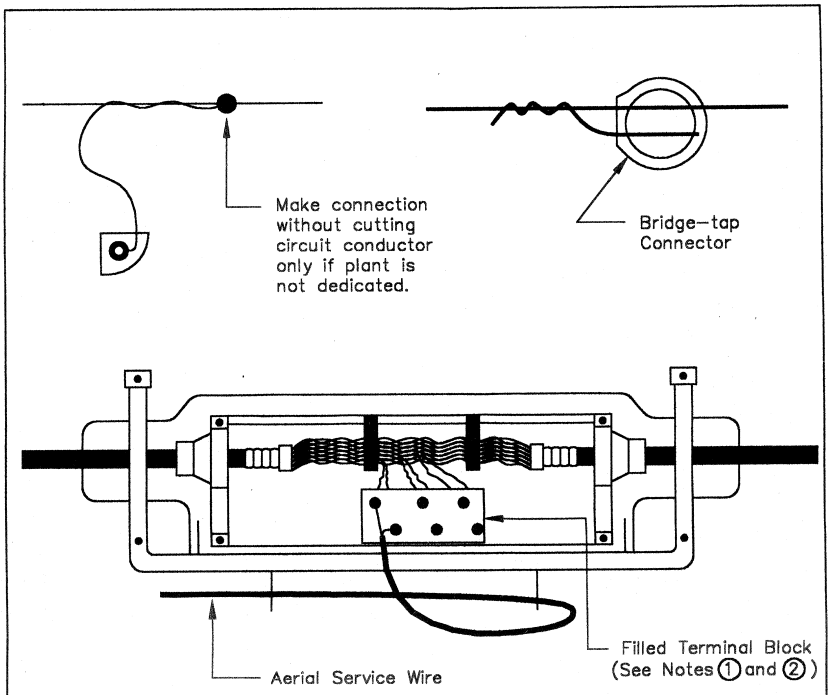

Notes:

1. Where aerial service wire connections are made along aerial plastic cable, unprotected filled terminal blocks equipped with lead–out wires shall be used.

2. Conductors of the aerial service wire shall be connected directly to the binding posts of the filled terminal block.

RURAL TELECOMMUNICATIONS CONSTRUCTION PRACTICES AERIAL PLASTIC CABLE DETAILS OF WIRE CONNECTIONS TO FILLED TERMINAL BLOCKS		
Scale: NTS		March 2001
		312–1

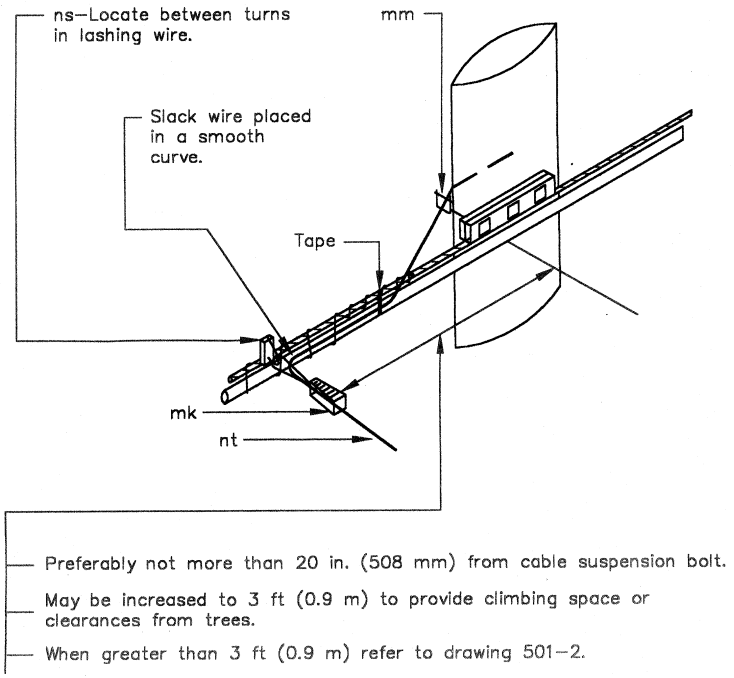

ITEMS	MATERIALS	NO. REQUIRED
*mm	Rings, drive	as required
*ns	Clamps, span	as required
mk	Clamps, drop wire	as required
nt	Wire, aerial service	as required

RURAL TELECOMMUNICATIONS CONSTRUCTION PRACTICES
SPAN CLAMP ATTACHMENT

Scale: NTS | March 2001

501–1

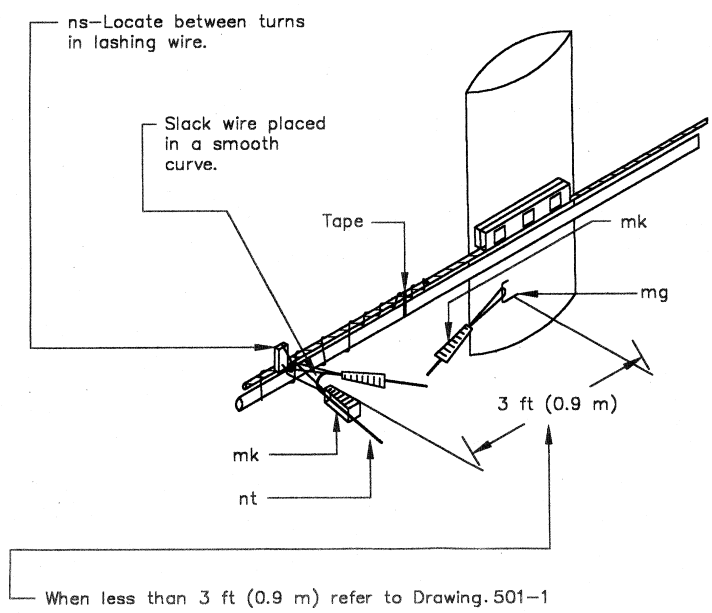

ITEMS	MATERIALS	NO. REQUIRED
*mg	Hooks, drive	as required
*ns	Clamps, span	as required
mk	Clamps, drop wire	as required
nt	Wire, aerial service	as required

RURAL TELECOMMUNICATIONS CONSTRUCTION PRACTICES
SPAN CLAMP ATTACHMENT

Scale: NTS | March 2001

501–2

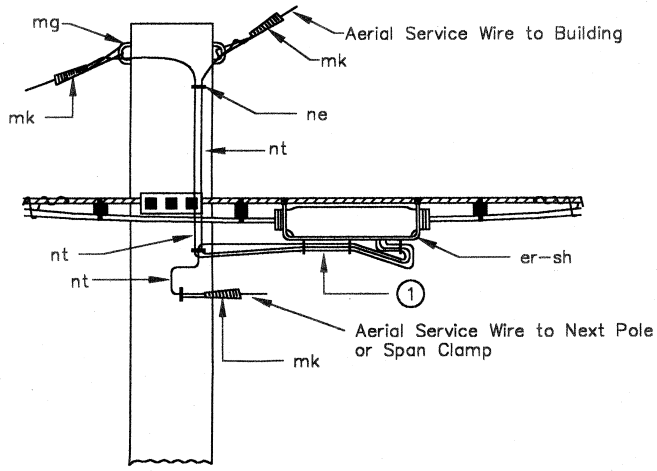

Note:

1. Install aerial service wiring through all rings on bottom of terminal housing. Turn wire back around last ring to assigned pair. Form wire loosely to avoid sharp bends.

ITEMS	MATERIALS	NO. REQUIRED
*mg	Hooks, drive	as required
*ne	Rings, bridle	as required
er	Enclosures, ready–access	–
sh	Blocks, filled, terminal, unprotected	–
nt	Wire, aerial service	as required
mk	Clamps, drop wire	as required

RURAL TELECOMMUNICATIONS CONSTRUCTION PRACTICES
SERVICE WIRE CONNECTIONS TO AERIAL CABLE

Scale: NTS		March 2001
		503–2

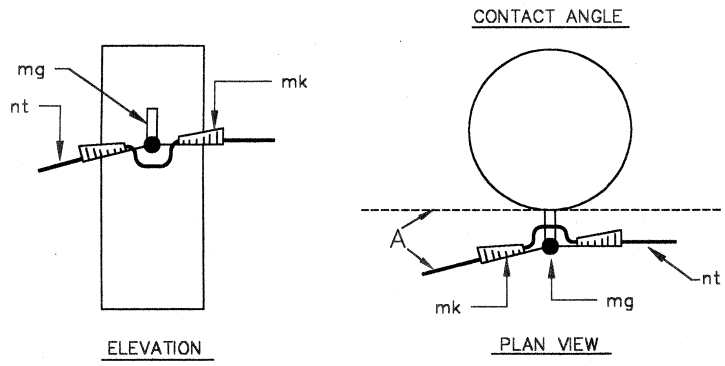

FIGURE A: Aerial service wires whose contact angle (A) exceeds five degrees and/or whose adjacent span lengths are different by 25 percent or more.

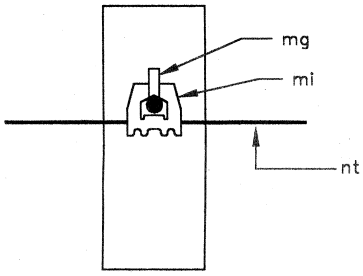

FIGURE B: Aerial service wires whose contact angle (A) is less than five degrees and/or whose adjacent span lengths are different by less than 25 percent.

ITEMS	MATERIALS	NO. REQUIRED
*mg	Hooks, drive	as required
nt	Wire, aerial service	as required
mk	Clamps, drop wire	as required
*mi	Support, drop wire	as required

RURAL TELECOMMUNICATIONS CONSTRUCTION PRACTICES
SERVICE WIRE ATTACHMENT AT INTERMEDIATE POLE

Scale: NTS		March 2001
		504

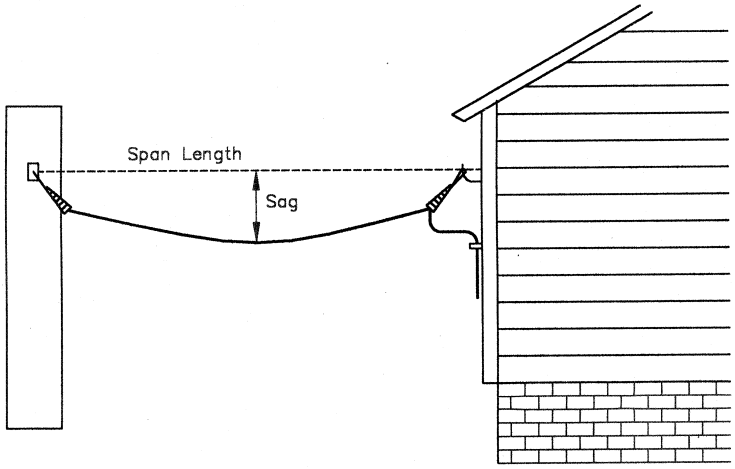

MINIMUM STRINGING SAG – COPPER COVERED STEEL REINFORCED (CCSR) and NONMETALLIC REINFORCED (NMR) AERIAL SERVICE WIRES

SPAN LENGTH ft (m)	SAG–MEDIUM AND LIGHT LOADING DISTRICTS	SAG–HEAVY LOADING DISTRICT
100 (30.5) OR LESS	20 in. (510 mm)	20 in. (510 mm)
125 (38)	34 in. (860 mm)	34 in. (860 mm)
150 (46)	4 ft (1.2 m)	4 ft (1.2 m)
175 (53)	5,5 ft (1.7 m)	7 ft (2.1 m)
200 (61)	7 ft (2.1 m)	11 ft (3.4 m)
225 (66.5)	9 ft (2.7 m)	
250 (76)	11 ft (3.4 m)	

Note: To reduce vibration and dancing, service wire shall be twisted one complete turn for each 10 ft (3 m) of span length at the time installation.

RURAL TELECOMMUNICATIONS CONSTRUCTION PRACTICES
AERIAL SERVICE WIRE SAGS

Scale: NTS | March 2001

505

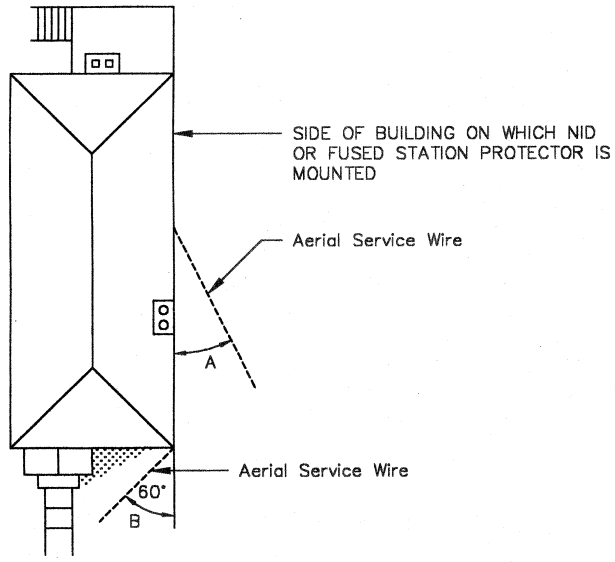

Frame Buildings Where NIDs Containing Fuseless Station Protectors are Used on Fire Resistant Buildings.

Use house hook or drop wire hook for any angle except angle B. When necessary to place service wire within angle B use "S" knob with corner bracket to avoid service wire attachment on front of building.

Frame Buildings Where Fused Station Protectors are Used.

If angle A is less than 30° use "S" knob. If angle A is greater than 30° use "S" knob with 5/16 in. (7.9 mm) angle screw. When necessary to place service wire within angle B use "S" knob with corner bracket to avoid service wire attachments on front of buildings.

RURAL TELECOMMUNICATIONS CONSTRUCTION PRACTICES SELECTION OF SERVICE WIRE ATTACHMENT		
Scale: NTS		March 2001
		506

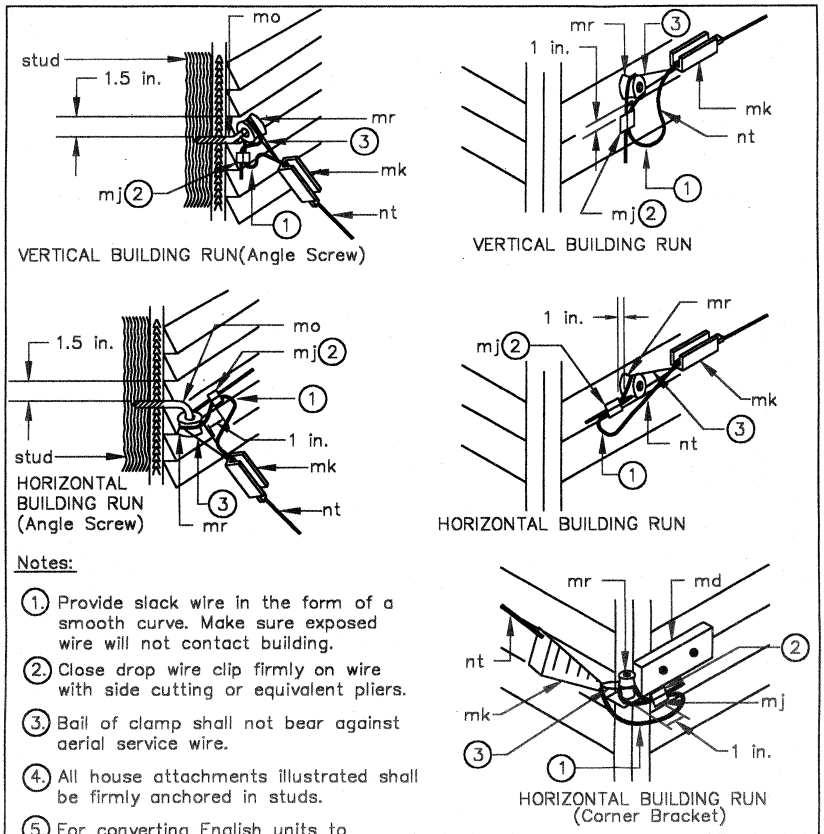

Notes:

1. Provide slack wire in the form of a smooth curve. Make sure exposed wire will not contact building.
2. Close drop wire clip firmly on wire with side cutting or equivalent pliers.
3. Bail of clamp shall not bear against aerial service wire.
4. All house attachments illustrated shall be firmly anchored in studs.
5. For converting English units to metric units use 1 in. = 25.4 mm.

ITEMS	MATERIALS
mk	Clamp, drop wire
*md	Bracket, house
*mr	Knob, insulator, "S"

ITEMS	MATERIALS
–	Washer, 1.25 in. OD, 0.5 in. ID
*mo	Screw, angle, 5/16 in.
nt	Wire, aerial service
*mj	Clip, drop wire

RURAL TELECOMMUNICATIONS CONSTRUCTION PRACTICES
INSULATED FIRST ATTACHMENTS FOR
AERIAL SERVICE WIRE

Scale: NTS | March 2001

507

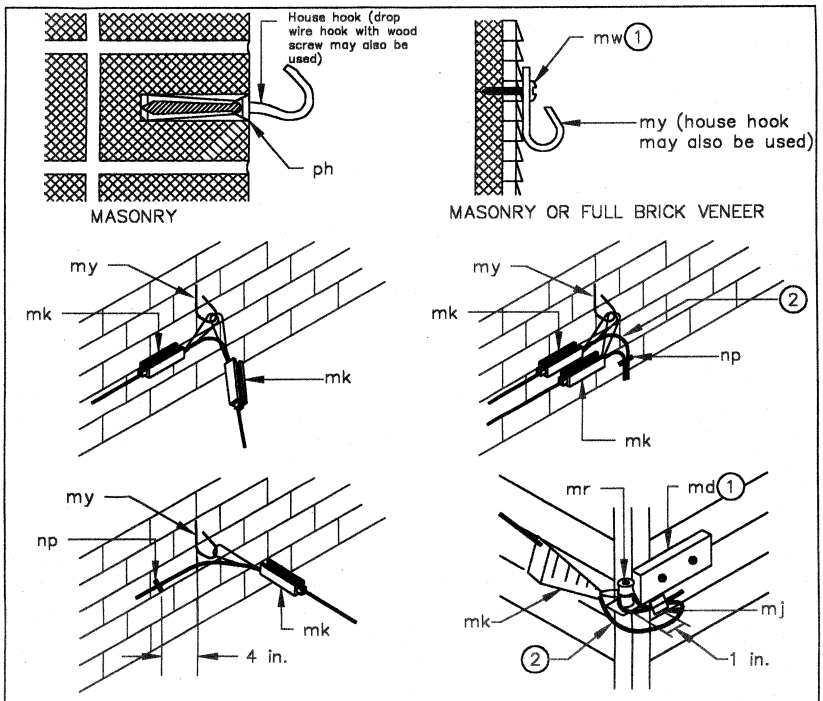

Notes:

1. See Table 4 for appropriate fasteners to be used with attachments. Expansion anchors not required on frame buildings, attachments must be firmly secured in studs.
2. Provide slack wire in the form of a smooth curve.
3. For converting English units to metric units use 1 in. = 25.4 mm.

ITEMS	MATERIALS
mk	Clamp, drop wire
*md	Bracket, house
*mr	Knob, insulator, "S"
–	Hook, house

ITEMS	MATERIALS
*mw	Screw, R.H., stainless steel, wood
*my	Hook, drop wire
*ph	Anchor, expansion
np	Clamp, cable
*mj	Clip, drop wire

RURAL TELECOMMUNICATIONS CONSTRUCTION PRACTICES
UNINSULATED FIRST ATTACHMENTS FOR
AERIAL SERVICE WIRE

Scale: NTS | March 2001

508–1

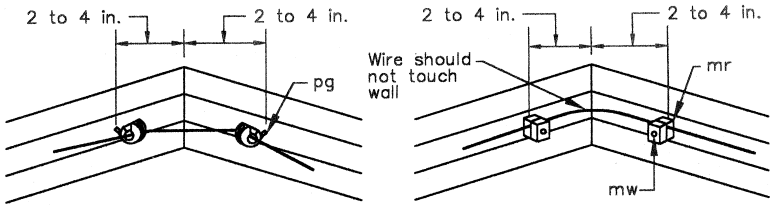

INSIDE CORNER

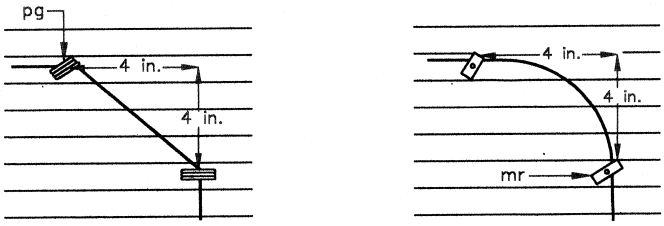

TURN

Notes:

1. Refer to Table 4 for appropriate fastening device.

2. For converting English units to metric units use 1 in. = 25.4 mm.

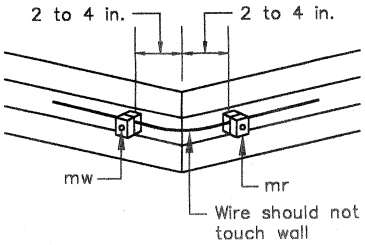

OUTSIDE CORNER

ITEMS	MATERIALS	NO. REQUIRED
*pg	Screw eye, insulated	as required
*mr	Knob, insulator, "C"	as required
*mw	Screw, R.H., wood	as required

RURAL TELECOMMUNICATIONS CONSTRUCTION PRACTICES
INSULATED INTERMEDIATE ATTACHMENTS
FOR SERVICE WIRES

Scale: NTS | March 2001

510

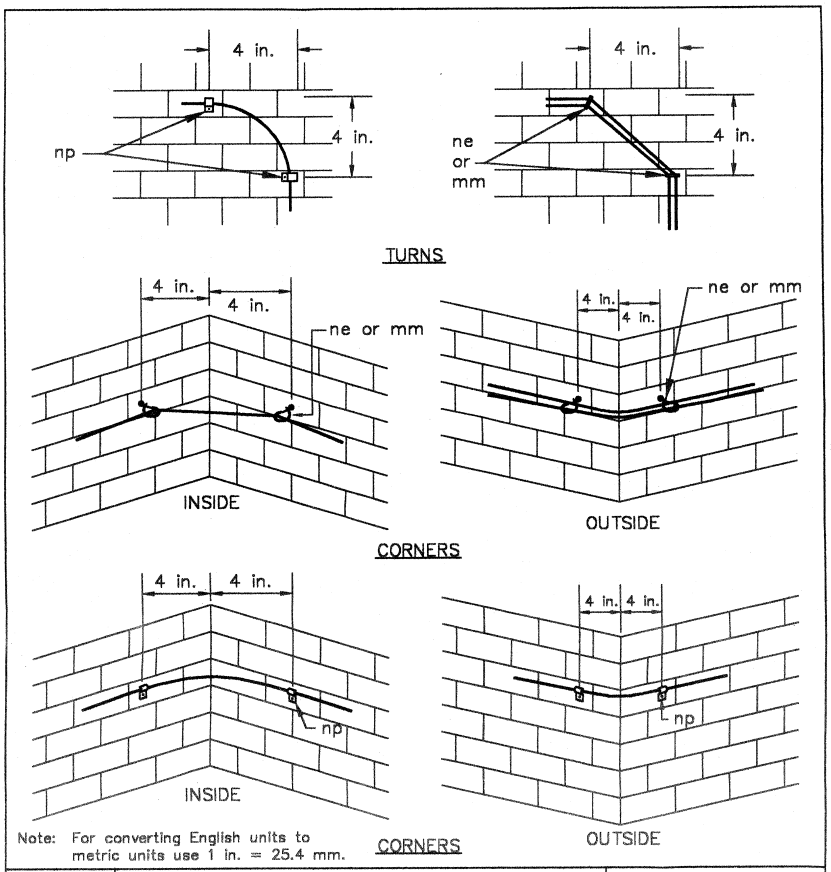

Note: For converting English units to metric units use 1 in. = 25.4 mm.

ITEMS	MATERIALS	NO. REQUIRED
*ne	Rings, bridle	as required
*mm	Rings, drive	as required
*np	Clamps, one–hole, offset	as required

RURAL TELECOMMUNICATIONS CONSTRUCTION PRACTICES
UNINSULATED INTERMEDIATE ATTACHMENTS
FOR SERVICE WIRES

Scale: NTS | March 2001

510–1

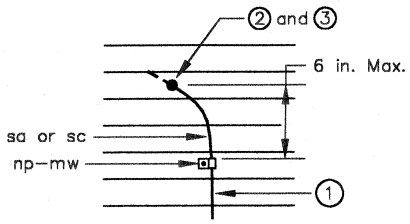

SKETCH A: Buried Service Above Grade Entrance

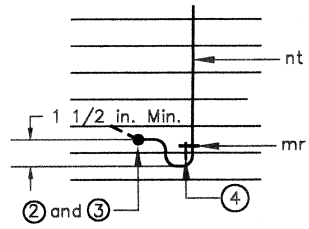

SKETCH B: Aerial Service Wire – Aerial Service Entrance

Notes:

1. The first attachment of the buried wire to the building should be located approximately 4 inches above the ground. The remaining attachments shall be spaced approximately 14 inches apart.
2. A porcelain or plastic tube shall be employed only when insulated attachments are required for support of aerial service wire on buildings.
3. Entrance hole shall be drilled to slope slightly upward. Except where a porcelain or plastic tube is required, all wires entering the hole shall be taped for a tight fit. When the aerial service wire approaches from above the entrance hole, a drip loop shall be made as shown.
4. Insert short piece of aerial service wire to cushion "C" knob.
5. Seal both ends of hole or conduit with duct seal.
6. For converting English units to metric units use 1 in. = 25.4 mm.

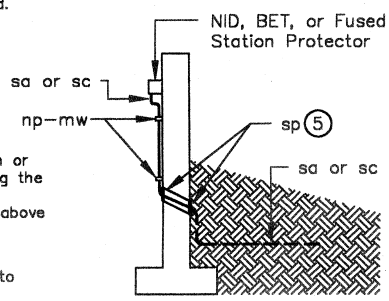

SKETCH C: Buried Service – Below Grade Entrance

ITEMS	MATERIALS	ITEMS	MATERIALS
*mr	Knob, insulator, "C"	*mw	Screw, wood
nt	Wire, aerial service	sa/sc	Wire or cable, filled, buried
–	Tube, plastic	sp	Sealer, duct
*np	Clamp, one–hole, offset		

RURAL TELECOMMUNICATIONS CONSTRUCTION PRACTICES
SERVICE ENTRANCES

Scale: NTS | March 2001

510–2

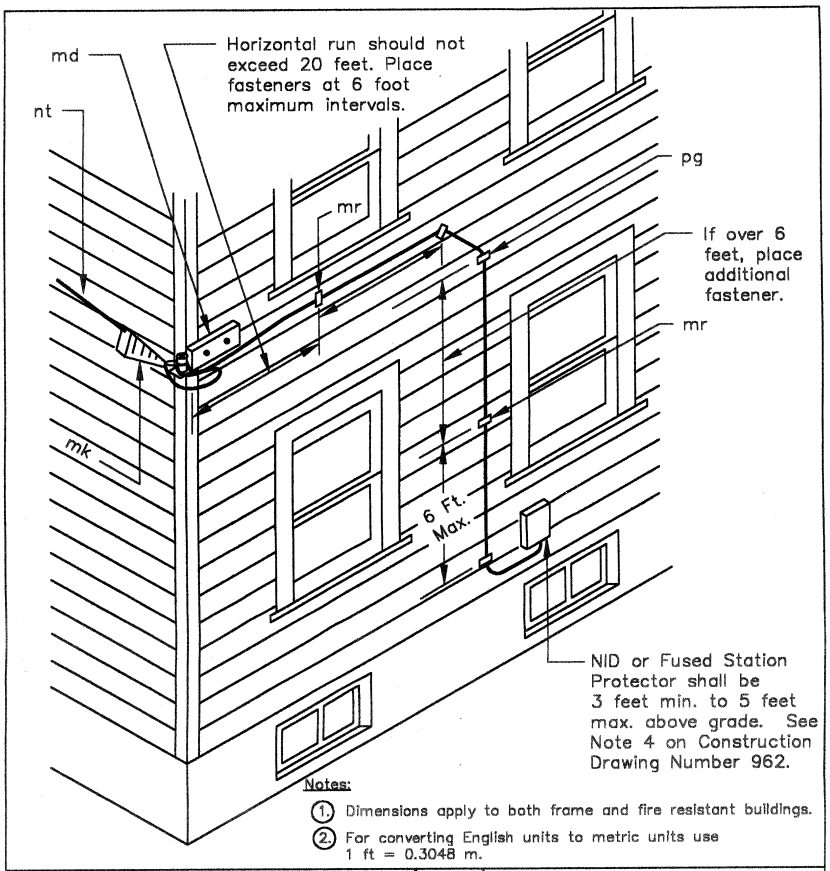

ITEMS	MATERIALS	ITEMS	MATERIALS
mk	Clamp, drop wire	nt	Wire, aerial service
*md	Bracket, corner	*pg	Screweyes, porcelain, insulated
*mr	Knob, "C"	*mr	Knob, insulator

RURAL TELECOMMUNICATIONS CONSTRUCTION PRACTICES
AERIAL SERVICE WIRE RUN ON BUILDINGS

Scale: NTS | March 2001

513

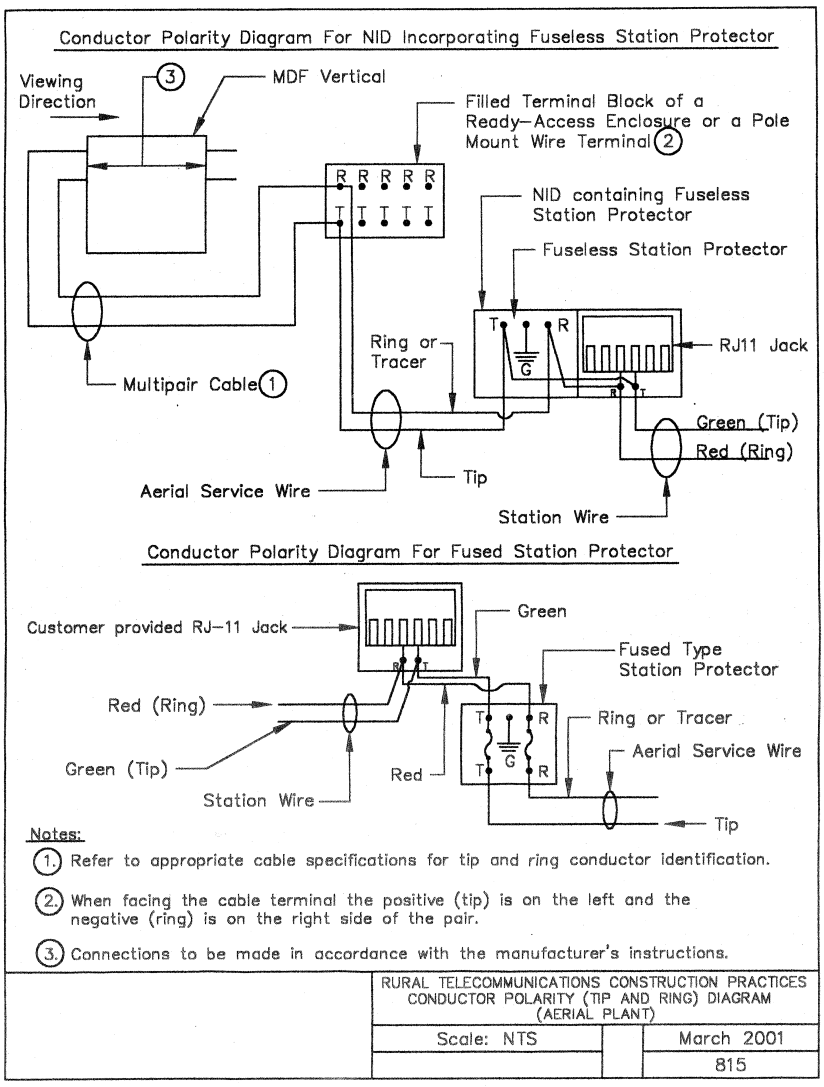
Conductor Polarity Diagram For NID Incorporating Fuseless Station Protector
Viewing Direction
3
MDF Vertical
Filled Terminal Block of a Ready–Access Enclosure or a Pole Mount Wire Terminal 2
R R R R R
T T T T T
NID containing Fuseless Station Protector
Fuseless Station Protector
T
R
G
RJ11 Jack
Ring or Tracer
Multipair Cable 1
Green (Tip)
Red (Ring)
Tip
Aerial Service Wire
Station Wire
Conductor Polarity Diagram For Fused Station Protector
Customer provided RJ–11 Jack
Green
Fused Type Station Protector
Red (Ring)
Ring or Tracer
Aerial Service Wire
Green (Tip)
Red
Station Wire
Tip
Notes:
1. Refer to appropriate cable specifications for tip and ring conductor identification.
2. When facing the cable terminal the positive (tip) is on the left and the negative (ring) is on the right side of the pair.
3. Connections to be made in accordance with the manufacturer's instructions.
RURAL TELECOMMUNICATIONS CONSTRUCTION PRACTICES
CONDUCTOR POLARITY (TIP AND RING) DIAGRAM
(AERIAL PLANT)
Scale: NTS
March 2001
815

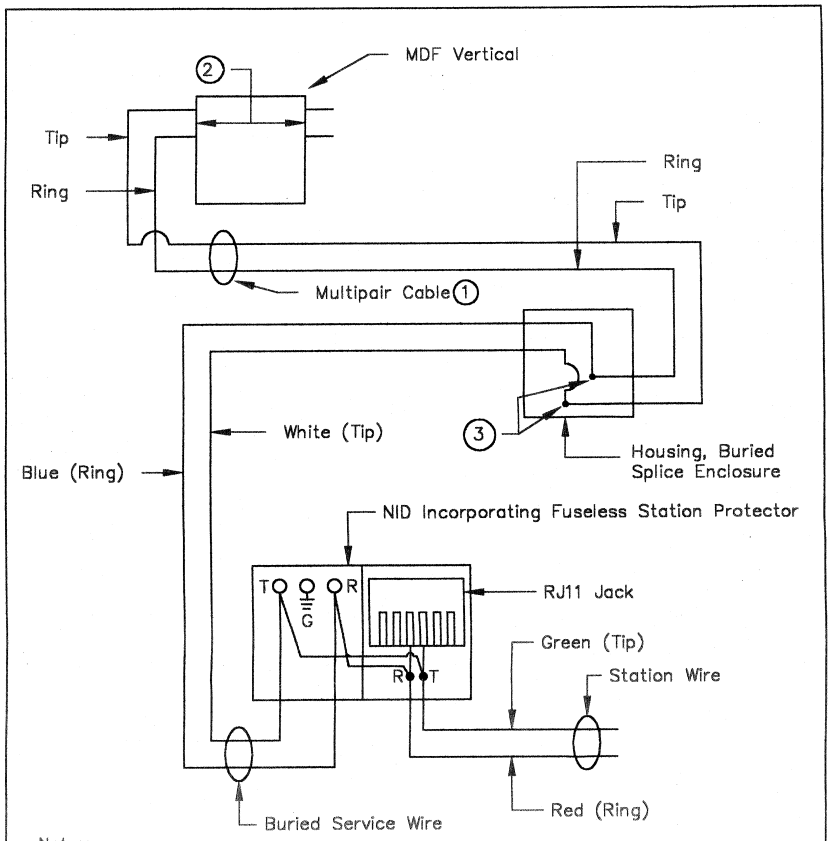

Notes:

1. Refer to appropriate cable specifications for tip and ring conductor identification.
2. Connections to be made in accordance with the manufacturer's instructions.
3. Connections to be made in accordance with 7 CFR 1755.200, "RUS standard for splicing copper and fiber optic cables."

RURAL TELECOMMUNICATIONS CONSTRUCTION PRACTICES BURIED PLANT CONDUCTOR POLARITY DIAGRAM		
Scale: NTS		March 2001
		815–1

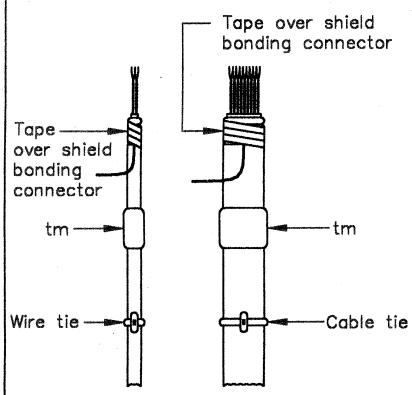

Buried Service Wire Marker

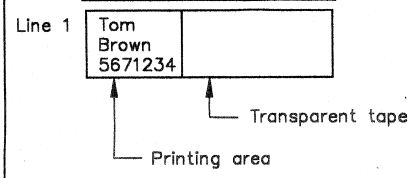

Buried Cable Marker

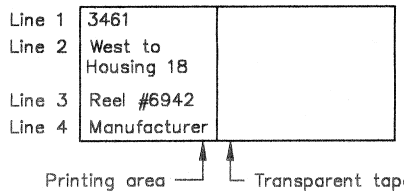

Notes:

1. Markers shall be installed on all buried wires and cables at each housing as shown in 7 CFR 1755.200.

2. The marker shall be wrapped around the cable in a manner such that the printed portion of the marker is completely covered and protected by at least one layer of transparent tape. On cables too large for this to be accomplished with a single marker, a second marker shall be applied so that the clear tape of the second marker provides protection for the printed portion of the first. The information shall be legibly printed and shall be readily visible.

3. The markers shall contain the following information unless indicated otherwise by the Borrower or Borrower's Engineer.

Buried Service Wire:

Line 1 – Subscribers identification (Such as: name, telephone number, or address)

Buried Cable or Wire:

Line 1 – Nearest sequential marking
Line 2 – Direction of cable or wire
Line 3 – Cable reel number
Line 4 – Name of cable manufacturer

4. Other methods or materials of directional marking may be used when specified by the Borrower or the Borrower's Engineer.

ITEM	MATERIAL	NO. REQ'D
*tm	Tape, marker	as required

RURAL TELECOMMUNICATIONS CONSTRUCTION PRACTICES
BURIED CABLE AND WIRE DIRECTIONAL MARKING

Scale: NTS | March 2001

958

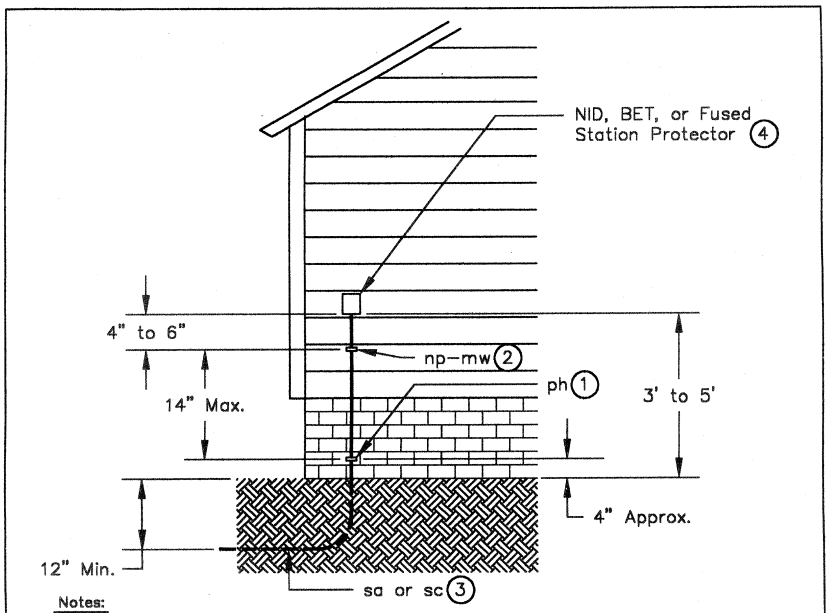

Notes:

1. When mounting NID, BET, or fused station protector and clamps on masonry surface, use screw expansion anchors or equivalent manual or machine–driven devices.
2. Attach filled buried service wire or cable to building with one–hole offset clamps spaced 14 in. max. apart. Where grounding conductor parallels service wire or cable, both wires may be run under the same attachment.
3. Place filled buried service wire or cable snug against building.
4. Details of NID, BET, or Fused station protector terminations are shown on Figures 10 through 16 of 7 CFR 1755.508, and Figure 19 of 7 CFR 1755.509.
5. For converting English units to metric units use 1 in. = 25.4 mm and 1 ft = 0.03048 m.

ITEMS	MATERIALS	ITEMS	MATERIALS
NID	NID, protected, station, outside	*rg	Wire, station
sa	Wire, filled, buried	*mw	Screw, stainless steel, wood
*ph	Anchor, expansion, screw	sc	Cable, filled, buried
*np	Clamp, one–hole, offset		

RURAL TELECOMMUNICATIONS CONSTRUCTION PRACTICES
BURIED WIRE SERVICE INSTALLATION ON BUILDINGS

Scale: NTS | March 2001
962

[66 FR 43327, Aug. 17, 2001]

§§ 1755.511–1755.521 [Reserved]

§ 1755.522 RUS general specification for digital, stored program controlled central office equipment.

(a) *General.* (1) This section covers general requirements for a digital telephone central office switching system, which is fully electronic and controlled by stored program processors. A digital switching system transfers information which is digitally encoded from any input port to a temporarily addressed exit port. The information may enter

the system in either analog or digital form and may or may not be converted to analog at the exit port depending on the facility beyond. The switching system shall operate properly as an integral part of the telephone network when connected to physical and carrier derived circuits meeting RUS specifications and other generally accepted telecommunications practices.

(2) The output of a digital-to-digital port shall be Pulse Code Modulation (PCM), encoded in eight-bit words using the mu-255 encoding law and D3 encoding format, and arranged to interface with a T1 span line.

(3) American National Standards Institute (ANSI) Standard S1.4–1983, Specification for Sound Level Meters, is incorporated by reference by RUS. This includes S1.4A-1985 that is also incorporated by reference. This incorporation by reference was approved by the Director of the Federal Register in accordance with 5 U.S.C. 552(a) and 1 CFR part 51. Copies may be obtained from ANSI Inc., 11 West 42nd Street, 13th Floor, New York, NY 10036, telephone 212–642–4900. Copies may be inspected during normal business hours at RUS, room 2838-S, U.S. Department of Agriculture, Washington, DC 20250, or at the National Archives and Records Administration (NARA). For information on the availability of this material at NARA, call 202–741–6030, or go to: *http://www.archives.gov/federal__register/code__of__federal__regulations/ibr__locations.html.*

(4) American Society for Testing Materials (ASTM) Specification B 33–91, Standard Specification for Tinned Soft or Annealed Copper Wire for Electrical Purposes, is incorporated by reference by RUS. This incorporation by reference was approved by the Director of the Federal Register in accordance with 5 U.S.C. 552(a) and 1 CFR part 51. Copies may be obtained from ASTM, 1916 Race Street, Philadelphia, PA, telephone 215–299–5400. Copies may be inspected during normal business hours at RUS, room 2838-S, U.S. Department of Agriculture, Washington, DC 20250, or at the National Archives and Records Administration (NARA). For information on the availability of this material at NARA, call 202–741–6030, or go to: *http://www.archives.gov/federal__register/code__of__federal__regulations/ibr__locations.html.*

(5) Bell Communications Research (Bellcore) document SR-TSV-002275, BOC Notes on the LEC Networks—1990, March 1991, is incorporated by reference by RUS. This incorporation by reference was approved by the Director of the Federal Register in accordance with 5 U.S.C. 552(a) and 1 CFR Part 51. Copies may be obtained from Bellcore Customer Service, 60 New England Avenue, Piscataway, NJ 08854, telephone 1–800–521–2673. Copies may be inspected during normal business hours at RUS, room 2838-S, U.S. Department of Agriculture, Washington, DC 20250, or at the National Archives and Records Administration (NARA). For information on the availability of this material at NARA, call 202–741–6030, or go to: *http://www.archives.gov/federal__register/code__of__federal__regulations/ibr__locations.html.*

(6) Bellcore TR-TSY-000508, Automatic Message Accounting, July 1987, is incorporated by reference by RUS. This incorporation by reference was approved by the Director of the Federal Register in accordance with 5 U.S.C. 552(a) and 1 CFR part 51. Copies may be obtained from Bellcore Customer Service, 60 New England Avenue, Piscataway, NJ 08854, telephone 1–800–521–2673. Copies may be inspected during normal business hours at RUS, room 2838-S, U.S. Department of Agriculture, Washington, DC 20250, or at the National Archives and Records Administration (NARA). For information on the availability of this material at NARA, call 202–741–6030, or go to: *http://www.archives.gov/federal__register/code__of__federal__regulations/ibr__locations.html.*

(7) Federal Standard H28, Screw-Thread Standards for Federal Services, March 31, 1978, is incorporated by reference by RUS. This includes: Change Notice 1, Federal Standard, Screw-Thread Standards for Federal Services, May 28, 1986; Change Notice 2, Federal Standard, Screw-Thread Standards for Federal Services, January 20, 1989; and Change Notice 3, Federal Standard, Screw-Thread Standards for Federal

Services, March 12, 1990. This incorporation by reference was approved by the Director of the Federal Register in accordance with 5 U.S.C. 552(a) and 1 CFR part 51. Copies may be obtained from the General Services Administration, Specification Section, 490 East L'Enfant Plaza SW, Washington, DC 20407, telephone 202–755–0325. Copies may be inspected during normal business hours at RUS, room 2838-S, U.S. Department of Agriculture, Washington, DC 20250, or at the National Archives and Records Administration (NARA). For information on the availability of this material at NARA, call 202–741–6030, or go to: *http://www.archives.gov/federal_register/code_of_federal_regulations/ibr_locations.html.*

(8) Institute of Electrical and Electronics Engineers (IEEE) Std 455–1985, IEEE Standard Test Procedure for Measuring Longitudinal Balance of Telephone Equipment Operating in the Voice Band, is incorporated by reference by RUS. This incorporation by reference was approved by the Director of the Federal Register in accordance with 5 U.S.C. 552(a) and 1 CFR part 51. Copies may be obtained from IEEE Service Center, 445 Hoes Lane, P. O. Box 1331, Piscataway, NJ 08854, telephone (201) 981–0060. Copies may be inspected during normal business hours at RUS, room 2838-S, U.S. Department of Agriculture, Washington, DC 20250, or at the National Archives and Records Administration (NARA). For information on the availability of this material at NARA, call 202–741–6030, or go to: *http://www.archives.gov/federal_register/code_of_federal_regulations/ibr_locations.html.*

(9) Institute of Electrical and Electronics Engineers (IEEE) Std 730–1989, IEEE Standard for Software Quality Assurance Plans, is incorporated by reference by RUS. This incorporation by reference was approved by the Director of the Federal Register in accordance with 5 U.S.C. 552(a) and 1 CFR part 51. Copies may be obtained from IEEE Service Center, 445 Hoes Lane, P. O. Box 1331, Piscataway, NJ 08854, telephone (201) 981–0060. Copies may be inspected during normal business hours at RUS, room 2838-S, U.S. Department of Agriculture, Washington, DC 20250, or at the National Archives and Records Administration (NARA). For information on the availability of this material at NARA, call 202–741–6030, or go to: *http://www.archives.gov/federal_register/code_of_federal_regulations/ibr_locations.html.*

(10) RUS Bulletin 345–50, PE-60, RUS Specification for Trunk Carrier Systems, September 1979, is incorporated by reference by RUS. This incorporation by reference was approved by the Director of the Federal Register in accordance with 5 U.S.C. 552 (a) and 1 CFR part 51. Copies may be obtained from the Rural Utilities Service, Administrative Services Division, room 0175-S, Washington, DC 20250. The bulletin may be inspected at the National Archives and Records Administration (NARA). For information on the availability of this material at NARA, call 202–741–6030, or go to: *http://www.archives.gov/federal_register/code_of_federal_regulations/ibr_locations.html.*

(11) RUS Bulletin 345–55, PE-61, Central Office Loop Extenders and Loop Extender Voice Frequency Repeater Combinations, December 1973, is incorporated by reference by RUS. This incorporation by reference was approved by the Director of the Federal Register in accordance with 5 U.S.C. 552 (a) and 1 CFR part 51. Copies may be obtained from the Rural Utilities Service, Administrative Services Division, room 0175-S, Washington, DC 20250. The bulletin may be inspected at the National Archives and Records Administration (NARA). For information on the availability of this material at NARA, call 202–741–6030, or go to: *http://www.archives.gov/federal_register/code_of_federal_regulations/ibr_locations.html.*

(12) RUS Bulletin 345–87, PE-87, RUS Specification for Terminating (TIP) Cable, December 1983, is incorporated by reference RUS. This incorporation by reference was approved by the Director of the Federal Register in accordance with 5 U.S.C. 552 (a) and 1 CFR part 51. Copies may be obtained from the Rural Utilities Service, Administrative Services Division, room

0175-S, Washington, DC 20250. The bulletin may be inspected at the National Archives and Records Administration (NARA). For information on the availability of this material at NARA, call 202–741–6030, or go to: *http://www.archives.gov/federal_register/code_of_federal_regulations/ibr_locations.html.*

(b) *Reliability.* (1) Quality control and burn-in procedures shall be sufficient so the failure rate of printed circuit boards does not exceed an average of 1.0 percent per month of all equipped cards in the central office during the first three months after cutover, and an average of 0.5 percent per month of all equipped cards in the central office during any 6-month period thereafter. A failure is considered to be the failure of a component on the PC board which requires it to be repaired or replaced.

(2) The central office switching system shall be designed such that the expected individual line downtime does not exceed 30 minutes per year. This is the interval that the customer is out of service as a result of all failure types, excluding dispatch and travel time, i.e., hardware, software, and procedural errors.

(3) The central office switching system shall be designed such that there will be no more than 1 hour of total outages in 20 years, excluding dispatch and travel time for unattended offices.

(c) *System type acceptance tests.* (1) System type acceptance tests (general acceptance tests) are performed for the purpose of determining whether or not a type of switching system should be added or retained as an RUS accepted system. While general acceptance tests will be required on each system type, they will not be expected to cover every requirement in this section. However, any installation of a system provided in accordance with this section shall be capable of meeting any requirement in this section on a spot-check basis.

(2) A ''completed call'' test shall be made part of these system type acceptance tests. There shall be no more than two in 10,000 locally originating and incoming calls misdirected, unsuccessfully terminated, prematurely disconnected or otherwise failing as a result of equipment malfunction and/or equipment failures, or as a result of transients, noise or design deficiencies. This test shall be made with a load box with no less than 10 lines access and 10 subscriber numbers for completion, or equivalent, with no other traffic in the system. If there is a failure in the equipment during this test, the cause shall be repaired and the test restarted at zero calls.

(3) System type acceptance testing applies basically to factory type testing, and not to owner acceptance testing for individual installations. The overall installed and operating system shall also meet these requirements, except for unusual circumstances or where specifically excluded by this or other RUS requirements.

(d) *Types of requirements.* (1) Unless otherwise indicated, the requirements listed in this section are fixed requirements.

(2) Optional requirements are those which may not be needed for every office and are identifiable by a phrase such as, ''when specified by the owner,'' or, ''as specified by the owner.''

(3) In some cases where an optional feature specified in paragraph (e) of this section will not be required by an owner, either now or in the future, a system which does not provide this feature will be considered to be in compliance with this section for the specific installation under consideration, but not in compliance with the entire section.

(4) The owner may request bids from any RUS accepted supplier whose system provides all the features which will be required for a specific installation.

(5) The Application Guide, RUS TE&CM 322, provides information about the economic and service factors involved in all optional features, as well as instructions for the completion of appendices A and B of this section.

(e) *General requirements.* (1) The equipment shall provide for terminating and automatically interconnecting subscriber lines and trunks in response to dial pulses (or push-button dialing signals, if specified) without the aid of an operator.

(2) Complete flexibility shall be provided for assigning any subscriber directory number to any central office line equipment by the use of internal programmed memory. Thus, any subscriber line and/or directory number may be moved to another terminal to distribute traffic loads, if the line equipment hardware is compatible with the service provided.

(3) The system shall be arranged to interface with interexchange carrier trunks and networks using single digit or multi-digit access codes. The system shall be equipped to handle at least 20-digit subscriber dialed numbers. All subscriber directory numbers in the office shall be seven-digit numbers.

(4) The network and the control equipment shall be comprised of solid-state and integrated circuitry components. Peripheral equipment shall be comprised of solid-state and integrated circuitry components as far as practical and consistent with the state-of-the-art and economics of the subject system.

(5) The basic switching system shall include the provision of software programming and necessary hardware, including memory, for optional custom calling services such as call waiting, call forwarding, three-way calling, and abbreviated dialing. It shall be possible to provide these services to any individual line (single-party) subscriber. The addition of these services shall not reduce the anticipated ultimate engineered line, trunk, and traffic capacity of the switching system as specified in appendix A of this section.

(6) The requirements in this specification apply only to single party lines. Although only single frequency ringing is required, other types may be requested in appendix A of this section.

(7) Provision shall be made for local automatic message accounting (LAMA), and for traffic service position system (TSPS) trunks, or equivalent, to the operator's office when required either initially or in the future.

(8) Tandem switching features shall be provided if specified in appendix A of this section.

(9) The system shall be arranged to serve a minimum of eight All Number Calling (ANC) office codes per office, with discrimination on terminating calls by trunk group, numbering plan, or programmed memory and class mark, if specified in appendix A of this section.

(10) Busy hour load handling capacity is an important feature when an office approaches capacity. The delays which may occur in call completion during busy hour periods may prove to be excessive in some system designs. Accordingly, each bidder shall provide, in appendix C of this section, data satisfactory to RUS regarding the busy hour load handling capacity and traffic delays of the system.

(11) Provision shall be made for hotel-motel arrangements, as required by the owner, to permit the operation of message registers at the subscriber's premises to record local outdial calls by guests (see Item 10.5, appendix A of this section).

(12) Provision shall be made to identify the calling line or incoming trunk on nuisance calls (see paragraph (g)(10) of this section for details).

(13) Full access from every subscriber line to every interoffice trunk shall be provided.

(14) Facilities shall be provided to implement service orders, make traffic studies, and perform switching and transmission tests by means of remote control devices if such operations are specified in Items 11.2 and 11.3 of appendix A of this section.

(15) Provision shall be made for the addition of facilities to record all subscriber originated calls based on dialed directory number, time of day, and duration of conversation. They shall be such that the additional equipment (if any is required) may be added to an in-service system without interruption of service and a minimum of equipment, wiring and software modifications.

(16) The system shall be capable of distributed switching operation where groups of subscriber lines can be remotely located from the central office. The remotely situated units are known as ''Remote Switching Terminals'' (RST's) (see paragraph (w) of this section). This does not eliminate the use of pair gain devices such as direct digitally connected concentrators, regular concentrators or subscriber carrier equipment, where specifically ordered by the owner and its engineer.

(17) The switching system shall have means to synchronize its clock with switches above it in the network hierarchy, when specified by the owner in item 3, appendix A of this section (see paragraph (j) of this section).

(18) Consistent with system arrangements and ease of maintenance, space shall be provided on the floor plan for an orderly layout of future equipment bays that will be required for anticipated traffic when the office reaches its ultimate size. Readily accessible terminals shall be provided for connection to interbay and frame cables to future bays. All cables, interbay and intrabay (excluding power), if technically feasible, shall be terminated at both ends by use of connectors.

(19) When specified in appendix A of this section, the system shall be capable of processing emergency calls to a 911 service bureau connected either by a group of one-way 911 lines or a trunk group.

(i) It shall be possible to reach the service bureau by dialing 911, 1+911, or a 7-digit number.

(ii) The system shall select an idle 911 line or trunk.

(iii) The system shall provide usual ringing and ringback signal until the called 911 line answers.

(iv) If the calling line goes on-hook first, the system shall hold the connection from the called 911 line and return steady low tone to the service bureau. The system shall then begin a 45-minute timeout, after which the calling line is disconnected and an alarm message is printed on a TTY. If the calling line goes off-hook before timeout, the system shall reestablish the conversation path.

(v) If the calling line does not disconnect, the service bureau attendant shall have the ability to force a disconnect of the established connection with the calling party.

(vi) When the 911 call is answered, the equipment shall be arranged so that coin lines are not charged for the call. Similarly, if some form of local call charging is used, there shall be no charge for the 911 call.

(vii) If the 911 service bureau is holding a calling line, it shall be possible for the 911 line to cause the equipment to ring back the calling line. This is done by providing a flash of on-hook signal from the 911 line lasting from 200 to 1,100 milliseconds. The signal to the calling line shall be ringing current if the line is on-hook, or receiver off-hook (ROH) tone if the line is off-hook.

(viii) Calls shall not be originated from the service bureau via the dedicated 911 lines. If an attempt is made to originate a call, it shall receive reorder tone. After 6 minutes, the system shall print an alarm message.

(ix) If 911 calls pass through intermediate switching, the forced-hold control, emergency ringback, and calling line status monitoring capabilities are lost.

(f) *Line circuit requirements*—(1) *General.* (i) The range of direct current (dc) resistances of subscriber loops, measured from the main frame in the central office and including the telephone set shall be at least 0–1900 ohms without loop extension and 1900–3600 ohms with loop extenders, or equivalent. The range when using extension equipment may be significantly reduced for straight line ringers. These limits apply under maximum adverse environmental and manufacturing variation tolerance conditions. Central office voltage shall be stabilized at a value necessary to provide at least a nominal 21 milliamperes current with a nontreated loop of at least 1900 ohms. Minimum loop insulation resistance without loop extenders shall be 25,000 ohms between conductors or from either conductor or both conductors in parallel to ground. Loop insulation resistance for loop extension devices may be 100,000 ohms minimum between conductors or from either conductor or both conductors in parallel to ground.

(ii) In addition to operating on nonloaded cable pairs and subscriber carrier, the equipment shall function properly with D-66 and H-88 loaded cable pairs, including any provisions the equipment must control for the purposes of proper transmission.

(2) *Dialing*—(i) *Subscriber dial speed.* The line equipment and central office equipment (COE) in tandem shall operate satisfactorily when used with subscriber dials having a speed of operation between eight and twelve impulses per second and a break period of

55 to 65 percent of the total impulse period.

(ii) *Subscriber dial interdigital time.* The line equipment and central office equipment shall operate satisfactorily with subscriber rotary dial interdigital times of 200 milliseconds minimum, and with pushbutton dialing interdigital times of 50 milliseconds minimum.

(iii) *Subscriber line pushbutton dialing frequencies.* (A) The frequency pairs assigned for pushbutton dialing shall be as follows, with an allowable variation of ±1.5 percent:

Low Group Frequencies (Hz)	High Group Frequencies (Hz)			
	1209	1336	1477	1633
697	1	2	3	Spare
770	4	5	6	Spare
852	7	8	9	Spare
941	*	0	#	Spare

(B) The receiver shall comply with the operating parameters of the dual-tone multifrequency (DTMF) central office receiver as described in section 6 of Bell Communications Research (Bellcore) document SR-TSV-002275, BOC Notes on the LEC Networks—1990.

(3) *Impedance.* For the purpose of this section, the input impedance of all subscriber loops served by the equipment is arbitrarily considered to be 900 ohms at voice frequencies.

(4) *Lockout.* (i) All line circuits shall be arranged for line lockout. When a permanent condition occurs prior to placing a line into lockout, a timed low level warning followed by a timed high level receiver off-hook (ROH) tone (see paragraph (i)(2)(xi) of this section) or a howler circuit (see paragraph (o)(2)(iii)(C) of this section) shall be applied to the line.

(ii) The line on lockout shall be reconnected automatically to the central office when the permanent off-hook condition is cleared.

(5) *Pay stations.* Pay stations may be prepay, or semi-postpay, as specified by the owner.

(6) *Loop extension.* (i) The number of lines which exceed 1900 ohms will be specified by the owner. When requested by the owner, the bidder shall furnish equipment to guarantee satisfactory operation of all lines.

(ii) Working limits for subscriber lines with loop extenders are covered in RUS Bulletin 345–55, PE-61, Central Office Loop Extenders and Loop Extender Voice Frequency Repeater Combinations.

(iii) Ringing from RUS accepted loop extenders, or their equivalent, shall be cut off from the called line when the handset at the called station is removed during the ringing or the silent interval.

(7) *Private branch exchange (PBX) lines.* PBX trunk hunting shall be available. It will not be necessary to segregate PBX lines to certain line groups.

(8) *Quantity.* A sufficient number of terminations shall be provided, in addition to the quantity specified by the owner for subscriber line service, to meet the requirements of the system for equipment testing, alarm checking, tone transfer, loop around test and other features.

(9) *Types.* There shall be provisions for types of lines such as ground start, loop start, regular subscriber, pay stations, etc.

(g) *Intraoffice switching requirements.* (1) The switching system shall:

(i) Provide dial tone in response to origination of a call by a subscriber, except on special lines where the application of dial tone is not applicable, such as manual and hot lines;

(ii) Remove dial tone immediately after the first digit has been dialed;

(iii) Recognize the class of service of the calling subscriber;

(iv) Register the digits dialed by the calling subscriber where the rotary dial or pushbutton dialing characteristics and the minimum interdigital times are as specified;

(v) Perform the necessary translation functions when the required number of digits have been registered, and select a channel to a proper outgoing trunk, if one is available, to the designated interexchange carrier;

(vi) Provide a transmission path from the calling subscriber line to the selected trunk, if an idle one is found;

(vii) Provide for more than one alternate route to the desired destination when specified by the owner, select an idle outgoing trunk in the first or second choice alternate route trunk group, if all trunks in the higher choice groups are busy, and provide a reorder signal (see paragraph (i)(2)(iv) of this

section) to the subscriber if no trunks are available in the last choice alternate route;

(viii) Translate the proper part of the registered incoming routing data on tandem calls into an identification of an outgoing trunk group, select an idle trunk in that group, initiate the connection of the incoming trunk to the outgoing trunk, set the trunks in the proper configuration for tandem operation, and transmit information as required to permit completion to the desired destination in the distant office;

(ix) Transmit the proper stored information over the selected trunk to permit completion of outgoing calls to the desired destination by the distant office or offices, and provide multifrequency (MF) outpulsing when specified;

(x) Register all the digital information on calls incoming from a distant office, when dial or MF pulsing characteristics and interdigital times are as specified;

(xi) Translate internally a registered directory number into line equipment location, ringing code and terminating class (such as ''PBX hunting'') on incoming or intraoffice calls;

(xii) Test the called line for a busy condition;

(xiii) Connect the incoming trunk or locally originated call to the called line if the called line is idle;

(xiv) Permit any type of ringing voltage available in the central office to be associated with any Subscriber Directory Number (SDN), cause the proper type of ringing voltage to be connected to the called line, and remove ringing from the line upon answer whether in the ringing or silent period; and

(xv) Test and monitor the switching system continually during periods of low traffic using the maintenance and diagnostic subsystem.

(2) The switching system shall offer at least the following originating and terminating class-of-service indications on a per-line basis to subscribers, as specified by the owner:

(i) Flat rate individual line, bridged ringing;

(ii) Flat rate PBX and trunk hunting numbers, bridged ringing;

(iii) Pay station;

(iv) Message rate subscriber line;

(v) Wide Area Telephone Service (WATS);

(vi) Extended Area Service (EAS);

(vii) Data service;

(viii) Hotel-Motel capability;

(ix) Denied originating;

(x) Denied terminating;

(xi) Custom calling features;

(xii) Special interexchange carrier accesses; and

(xiii) Presubscription to designated interexchange carrier.

(3) The switching system shall provide PBX hunting.

(i) At least one trunk hunting group in each 100 SDN's equipped shall be provided. More may be provided as specified by the owner.

(ii) PBX groups shall be of a reasonable size commensurate with the ultimate size of the switching system.

(iii) Any available SDN may be used for PBX trunk hunting.

(iv) Each PBX group shall have the capability of being assigned one or more nonhunting SDN's for night service.

(v) If the called line is a PBX hunting line, the switching system shall test all assigned lines in the hunting group for a busy condition.

(vi) If the called PBX group is busy, line busy tone, as specified in paragraph (i)(2)(iii) of this section, shall be returned to the originating end of the connection.

(4) The switching system shall provide pay stations which may be prepay or semi-postpay. The system shall be arranged so that an operator and emergency service (911) may be reached from prepay or semi-postpay coin lines without the use of a coin, when the proper pay station equipment is provided.

(5) To meet dialing requirements, the switching system shall:

(i) Initiate the line lockout function after a delay, as specified in paragraph (r)(3) of this section, if dial or pushbutton dialing pulses are not received after initiation of a call, preferably routing the subscriber line to a holding circuit for tones and then automatically to lockout;

(ii) Connect 120 interruptions per minute (IPM) paths busy tone, recorded message, or other distinctive

tone to the calling subscriber if an interval longer than that specified in paragraph (r)(4) of this section elapses between dialed digits;

(iii) Register the standard tone calling signals received from a subscriber station arranged for pushbutton dialing if specified by the owner, provide arrangements to function properly with 12-button pushbutton dialing sets, and return a reorder signal to the subscriber upon receipt of signal from the 11th or 12th buttons if neither of these buttons is assigned functions; and

(iv) Connect the incoming trunk to the digit register equipment within 120 milliseconds after seizure where direct dialing is received on calls from a distant office, cancel the bid for a register, and return reorder tone to the calling end if dial pulses are received before a register is attached.

(6) The switching system shall provide for appropriate circuit usage.

(i) To avoid inefficient utilization of the switching network, that portion of the common equipment that establishes the connection on intramachine calls shall not require more than 500 milliseconds, exclusive of ringing and ring trip, to complete its function under no-delay conditions.

(ii) The switching system shall provide for duplication in a load sharing or redundant configuration any circuit elements or components, the failure of which would reduce the grade of service of 100 or more lines by more than 25 percent of the traffic carrying capacity.

(iii) The switching system shall ensure that failure of access to a high choice circuit will not prevent subsequent calls from being served by lower choice circuits, wherever possible.

(iv) Where only two circuits of a type are provided, circuits shall be designed so that failure of one circuit will not permanently block any portion of the system for the duration of the failure.

(v) Where more than two circuits of a type are provided, successive usages should be on a rotational or random basis rather than the step-up selection with the possible exception of a last choice trunk.

(vi) The system shall be designed so that, in the event of a network failure, the system shall immediately or simultaneously use a redundant portion of the network to complete the call.

(7) The switching system shall provide busy verification facilities with the method of access specified by the owner.

(i) Only an operator or a switchman shall be able to override a busy line condition.

(ii) If the called line is busy, off-hook supervision shall be given the operator or switchman.

(iii) The responsibility of restricting subscribers in distant offices from having access to busy verification shall be on the distant office personnel when the toll trunks are used for both toll connecting and verification traffic.

(iv) When a verification code is used, all digits of the code must be dialed before cut-through to the called line can be accomplished.

(8) The switching system shall provide intercept facilities.

(i) All unused numbering plan area codes, home numbering plan area office codes, service codes and subscriber directory numbers (SDN's) shall be routed to intercept. All intercept administration shall be by changes in memory administrable by telephone company personnel. Maximum machine time to place a subscriber on intercept shall be 15 seconds.

(ii) Unequipped SDN's intercept shall be effective if the processor memory does not have information concerning the SDN in question.

(iii) The intercept equipment shall be arranged so that specific SDN's can be routed to a separate intercept circuit for changed numbers.

(iv) When an intercept call is answered, either by an operator or by a recorded announcement, an off-hook or charge supervision signal shall not be returned, even momentarily, to the originating end.

(v) When intercepting service is to be handled over the regular interoffice toll trunks, a distinctive identifying tone shall be transmitted when the operator answers. This tone shall be of the frequency and duration specified in paragraph (i)(2)(x) of this section.

(9) The switching system shall provide nuisance call trap facilities which, when activated, provide a permanent

record of the calling and called numbers complete with date and time of day. Where the call originates over an interoffice trunk, the actual trunk number shall be recorded. There shall be provision for the called subscriber to hold the connection and for the positive trace of the call from origination to termination within the office.

(10) The switching system shall follow appropriate release procedures.

(i) The office shall be arranged so a connection to a terminating channel other than assistance operator shall be released under control of the calling party so that the channel can be reseized, unless the call is to emergency 911 service or other termination arranged for called party control.

(ii) If the called party disconnects first, the channel used in the originally established connection shall be held until the calling party disconnects or until the timing interval specified in paragraph (r)(7) of this section has elapsed. This feature shall not interfere with the normal operation of calls to intercept, fire alarm, or other special services.

(11) The switching system shall provide line load control facilities, when specified by the owner, to give preference for originating service to a limited group of subscribers during emergencies.

(i) These facilities may be activated manually by input-output (I/O) device or automatically after a manual setting of a key (or equivalent) to put line load control into effect, as determined by the bidder. The automatic procedure is preferable.

(ii) Procedures shall be established to avoid the unauthorized use of the line load control facilities.

(iii) Where automatic activation is provided, service may be provided to small groups of nonemergency subscribers on limited grade of service whenever the office load becomes low enough to permit this to be done safely.

(h) *Interoffice trunk circuit requirements*—(1) *General*. (i) The bidder shall supply, as requested by the owner, solid-state technology type trunk and signaling circuits of any of the types described in RUS TE&CM 319, Interoffice Trunking and Signaling, or, with the approval of RUS, any other more recent and desirable types not as yet covered in the manual. For dc signaling, the duplex (DX) and loop types of signaling are preferred.

(ii) Trunks shall not be directly driven from the subscriber's dial on outward calls.

(iii) In order to reduce the spares inventory and minimize incidence of improper maintenance replacement of circuit assemblies, the types of trunk circuits shall be kept to a minimum. Variation in assemblies should be mainly limited to variation in signaling modes.

(iv) Trunk circuits which connect with carrier or 4-wire transmission facilities shall be arranged for 4-wire transmission to avoid an intermediate 2-wire interface between a 4-wire switching system and trunk facilities.

(2) *Quantity*. Trunk quantities shall be as specified in appendix A of this section. Sufficient space shall be provided for an orderly layout of trunks. Trunks of a certain type going to the same destination may be grouped together on the original installation.

(3) *Requirements for interoffice connections*. (i) When operator trunks are used in common for both coin and noncoin lines, they shall be arranged to provide an indication to the operator by means of a visual signal or tone when calls are from pay stations. When a tone is used, it shall be of the type specified in paragraph (i)(2)(v) of this section and shall be connected to be heard only by the operator upon answer. It shall be possible to repeat the tone signal.

(ii) There are no requirements for trunks arranged for manual re-ring by a toll operator, either with the receiver on or off the hook, except to coin stations with the receiver on the hook.

(iii) On calls from subscribers to the assistance operator, the release of the connection shall be under control of the last party to disconnect. An exception is operator control of disconnect that is used on outgoing trunks to a TSP/TSPS system.

(iv) On calls originated by an operator, the release of the connection shall be under control of the operator.

(v) Where trunks with E and M lead signaling are used, the trunk circuits for Type I signaling shall be arranged

to place ground on the M lead during the on-hook condition and battery on the M lead in the off-hook condition. For E and M Type II, only a make contact between the MA and MB lead will be required. In either type, current limiting shall be provided in the E lead of the trunk circuit itself, as required for proper operation. It shall be assumed that connection equipment in the form of trunk carrier, multiplex, or associated signaling apparatus furnishes only a contact closure to ground (Type I) or to a signal ground lead (Type II) for an off-hook condition on the E lead.

(vi) Where answer supervision is used to determine the initiation of the charging interval for a call, such answer supervision shall not be effective for charging until after the elapse of the timing interval listed in paragraph (r)(5) of this section.

(vii) When necessary, provision shall be made for reception of start and stop dial signals on toll trunk equipment.

(viii) When trunks arranged for automatic message accounting (AMA), toll ticketing, or centralized automatic message accounting (CAMA) are specified by the owner, these trunks shall provide the pertinent features described in paragraph (k) of this section applicable to such functions.

(4) *Requirements for direct digital connections.* (i) Interface units which will permit direct digital connection to other digital switches, channel banks and remote line and/or trunk circuits over digital facilities shall be provided when specified by the owner. The digital transmission system shall be compatible with T1 type span lines using a DS1 interface and other digital interfaces that may be specified by the owner. The RUS specification for the span line equipment is Bulletin 345–50, PE-60, RUS Specification for Trunk Carrier Systems.

(ii) Each interface circuit shall connect 24 voice channels to the switching system from a 1.544 megabit per second DS1 bit stream. The DS1 bit stream entering or exiting the system shall be in the D3 format and the voice signals shall be encoded in 8 bit mu-255 PCM. The format and processing of the bit stream must be compatible with characteristics of the D3 channel bank such as alarm and maintenance characteristics. Loss of receive signal (DS1) shall be detected and the equivalent of a carrier group alarm shall be executed in 2.5 ±0.5 seconds. Loss of synchronization shall be detected by slips, timing jitter, and wander in accordance with industry standards.

(iii) Signaling shall be by means of MF or dial pulse (DP) and the system which is inherent in the A and B bits of the D3 format. In the case where they are not used for signaling, the A and B bits shall be used only for normal voice and data transmission.

(i) *Tone requirements*—(1) *General.* Tones shall be provided to indicate the progress of a call through the office. Tone generators should be an integral part of the switching systems. The tones should be introduced digitally by the application of the appropriate bit stream to the line or trunk circuit via the digital switching network. The necessary precautions shall be made to ensure tone sources automatically if the primary sources fail.

(2) *Tone specifications.* (i) Dial tone shall consist of 350 Hz plus 440 Hz at a composite level of −10 dBm0 which equates to −13 dBm0 per frequency. This is the precise tone suitable for use with pushbutton dialing.

(ii) Low tone shall consist of 480 Hz plus 620 Hz at a composite level of −21 dBm0 which equates to −24 dBm0 per frequency.

(iii) Line busy tone shall be low tone interrupted at 60 IPM, with tone on 0.5 seconds and off 0.5 seconds.

(iv) Reorder, all paths busy, and no circuit tone shall be low tone interrupted at 120 IPM, with tone on 0.25 seconds and off 0.25 seconds.

(v) Identifying tone on calls from coin lines shall be uninterrupted low tone.

(vi) High tone shall consist of 480 Hz at −17 dBm0.

(vii) Audible ringback tone shall consist of 440 plus 480 Hz at a composite level of −16 dBm0 which equates to −19 dBm0 per frequency.

(viii) The call progress tones listed in this section are described in Bellcore document SR-TSV-002275, BOC Notes on the LEC Networks—1990, section 6. The 350, 440, 480, and 620 Hz tones shall

be held at ±0.5 percent frequency tolerance and ±3 dB amplitude variation. The amplitude levels specified are to be measured at the main distributing frame, excluding cable loss.

(ix) Distinctive tone, when required for alarm calls, or other features, shall consist of high tone interrupted at 200 IPM with tone on 150 ms and off 150 ms.

(x) Identifying tone on intercepted calls shall consist of uninterrupted high tone impressed on the trunk circuit 300 to 600 milliseconds following the operator's answer of intercepted calls.

(xi) An ROH circuit shall have output tones which do not interfere with the pushbutton or multifrequency signaling tones. The ROH tone may be introduced digitally internal to the system near the overload level of +3 dBm0. No power adjustment will be required. The frequency of the output shall be distinctive and urgent in order to attract the subscriber's attention to an off-hook situation. (Warning: In order to determine the signal level, a frequency selective voltmeter must be used to determine the level of each signal component and mathematical power addition used to combine these measurements into a single level value.)

(xii) During application of tones, office longitudinal balance shall be maintained within 15 dB of that specified in paragraph (q)(8) of this section.

(j) *System clock.* (1) The central office clock and network synchronization system shall have the ability to be synchronized with external clocks for network synchronization, including detection of slips, timing, jitter and wander, in a digital-to-digital environment or operate initially in an independent network (refer to Bellcore document SR-TSV-002275, BOC Notes on the LEC Networks—1990, section 11).

(2) The end office central office system clock shall be a Stratum 3 clock with:

(i) A minimum long-term accuracy of $\pm 4.6 \times 10^{-6}$ (±7 Hz @ 1.544 MHz);

(ii) A minimum stability of 3.7×10^{-7}/day upon loss of all frequency references; and

(iii) A ''Pull-In Range'' for the capability of synchronizing to a clock with accuracy of $\pm 4.6 \times 10^{-6}$.

(3) The access tandem central office system clock shall be a Stratum 2 clock with:

(i) A minimum long-term accuracy of $\pm 1.6 \times 10^{-8}$ (±0.025 Hz @ 1.544 MHz);

(ii) A minimum stability of 1×10^{-10}/day upon loss of all frequency references; and

(iii) A ''Pull-In Range'' for the capability of synchronization to a clock with accuracy of $\pm 1.6 \times 10^{-8}$.

(k) *Switched access service arrangements*—(1) *General.* The equipment shall be capable of providing Feature Group A, Feature Group B, Feature Group C, and Feature Group D switched access service arrangements, as described in Bellcore document SR-TSV-002275, BOC Notes on the LEC Networks—1990, section 6 and section 15, including arrangements for automatic number identification (ANI).

(2) *Operation.* (i) All equipment shall be arranged for Feature Group A (Line Side Connection).

(ii) All equipment shall be arranged for Feature Group B given that appendix A of this section requires the equipment of the necessary trunks (Trunk Side Connection).

(iii) The equipment shall be arranged for Feature Group C on the trunk groups specified in appendix A of this section. Even though appendix A of this section specifies Feature Group D or some other trunk group, it shall be possible through software commands available to the owner to use Feature Group C signaling protocols on a trunk group basis until such time that the trunk group in question converts to Feature Group D signaling protocols.

(iv) The equipment shall be arranged for Feature Group D on the trunk groups specified in appendix A of this section.

(v) Calls originating from coin lines toward switched access service shall be arranged either to provide signaling protocols for TSPS, or in the absence of TSPS-type service, such calls shall be blocked.

(vi) The equipment shall be arranged for forwarding routing information, calling party identification, and called party numbers in the proper feature group protocols, by trunk group as specified in appendix A of this section.

(vii) The equipment shall be arranged for AMA data collection as specified in appendix A of this section by trunk group. Unless otherwise specified by the owner, the equipment shall be arranged to collect the billing data in the Bellcore AMA format as described in Bellcore document TR-TSY-000508, Automatic Message Accounting.

(viii) If specified in Item 9.4, appendix A of this section, the equipment shall be arranged to store the billing data in a pollable system. If specified in Item 9.5, appendix A of this section, equipment shall be furnished to poll the pollable systems associated with the contract.

(l) *Fusing and protection requirements*—(1) *General*. (i) The equipment shall be completely wired and equipped with fuses, trouble signals, and arranged for printout of fault conditions, with all associated equipment for the wired capacity of the frames or cabinets provided.

(ii) Design precautions shall be taken to prevent the possibility of equipment damage arising from the insertion of an electronic package into the wrong connector, the removal of a package from any connector, or the improper insertion of the correct card in its connector.

(2) *Fuses*. Fuses and circuit breakers shall be of an alarm and indicator type, except where the fuses or breaker location is indicated on the alarm printout. Their rating shall be designated by numerals or color code on the fuse panel, where feasible.

(3) *Components*. (i) Insofar as possible, all components shall be capable of being continuously energized at rated voltage without injurious results. Insofar as possible, design precautions shall be taken to prevent damage to other equipment and components when a particular component fails.

(ii) Printed circuit boards or similar equipment employing electronic components shall be self-protecting against external grounds applied to the connector terminals, where feasible. Board components and coatings applied to finished products shall be of such material or treated so they will not support combustion.

(iii) Every precaution shall be taken to protect electrostatically sensitive components from damage during handling. This shall include written instructions and recommendations (see Item 6.1,h of appendix C of this section).

(m) *Switching network requirements*—(1) *The network*. (i) All networks shall be comprised of solid-state components.

(ii) The switching network shall employ time division digital switching and be compatible for connection to D3 type PCM channel banks without conversion to analog.

(iii) Equipment shall be available as required to connect analog lines and trunks, analog or digital service circuits, digital carriers to RST's, D3 channel banks or other digital switching units.

(2) *Network quantity*. Where the number of stages in the switching network and their control varies with the capacity of the system, sufficient equipment and wiring shall be supplied initially in order that there will be no service interruptions when additions are made up to the ultimate capacity as specified in appendix A of this section. This does not imply the necessity of supplying empty cabinets unless this is the only way the necessary wiring can be accomplished.

(n) *Stored program control (SPC) equipment requirements*. (1) The system shall provide redundancy in call processing such that the failure of a call processing unit does not degrade the call processing capabilities of the switching system nor result in the loss of established calls.

(2) Programs shall be modular, flexible and structured. In the interest of more dependable and more easily read programs, it is desirable to use a language which is more person-oriented leaving the detailed machine-oriented problems to a compiler program. Quality assurance of all software programs shall be in accordance with IEEE Std 730–1989, IEEE Standard for Software Quality Assurance Plans, or equivalent.

(3) The office administration program shall have checks within it to

prevent failure due to erroneous or inconsistent input data. It shall safeguard against the possibility of upsetting machine performance with improper instructions or information. In addition, modular structure shall allow the use of a variety of human-engineered service order formats. Service changes may be performed remotely if so desired. Average machine time for service change shall be 15 seconds or less. Service changes shall not be registered in permanent memory until verified. The access to the service change shall not have access to generic program.

(4) The switching system shall be able to offer, by request, at least the following printouts of its routine stored data for administrative purposes:

(i) A list of all assigned directory numbers, in numerical order, with their assigned class of service and line terminal numbers;

(ii) A list of all directory numbers, in numerical order, associated with a class of service;

(iii) A list of all unassigned line terminals;

(iv) Traffic data in proper form for separation studies in accordance with the revenue separations procedures current at the time of the contract;

(v) All lines on lockout;

(vi) All lines assigned to intercept;

(vii) All available (unassigned) directory numbers in the working thousands group; and

(viii) A list of equipment busied out for maintenance.

(5) The printouts in paragraph (n)(4) of this section may be delayed to times of light traffic.

(6) Maintenance diagnostics shall be performed by a fault recognition system utilizing both software and hardware, each being used where they are most effective for maintenance and reliability. In the economic interests of providing early and efficient fault detection and accurate pinpointing of faulty areas, it is desirable to have a comprehensive person-machine interface supported by extensive automatic fault detection and analysis, involving diagnostic software for fault resolution and automatic recovery mechanisms to maintain continuous service. Maintenance messages may be channeled to a remote maintenance center if so desired.

(7) Information in memory, having no requirement for changes to be introduced in the maintenance or operation of the system, may be stored in memory devices such as programmable read-only memory (PROM) or other devices that cannot be reprogrammed in the field.

(o) *Maintenance facilities*—(1) *Alarm features, including alarm sending.* (i) The equipment shall be arranged to provide audible and visual alarms indicating fuse operation or other circuit malfunctions resulting from component failure, crosses or open wiring, or any other conditions affecting service which can be detected economically.

(ii) The alarms shall be classified in accordance with their effect on the system.

(A) Catastrophic alarms demand immediate attention and require notification of the highest level of supervisory personnel. Conditions such as loss of service, loss of one or more remote line switches or line concentrators connected through Direct Digital Interface, loss of network control, and loss of computer program in all processors shall produce catastrophic alarms.

(B) Major alarms demand rapid action. Conditions such as loss of one or more groups of subscribers or trunk ports, blown fuses for common groups of channels, loss of control to groups of channels, failure of one or both redundant units, and total loss of battery charging current for more than 15 minutes shall produce major alarms.

(C) Minor alarms indicate nonemergency conditions which cause degraded service or fault conditions which causes the system to operate within less-than-optimum performance. Conditions discovered in automatic routining which have not shown in the operation of the equipment but require attention and cumulative line lockout (level adjustable) are examples of minor alarm conditions.

(iii) When the office is arranged for unattended operation, facilities shall be provided for extending the alarm indications to an attended point.

(iv) When the use of a separate outside plant facility for alarm sending is

specified, the nature of the alarm may be indicated to the distant point by machine printout or other display device.

(v) When alarm sending is accomplished over a regular operator office trunk, the operator shall be apprised that the call is an alarm indication by a distinctive tone, as specified by the owner in appendix A of this section. It shall be possible for the operator to determine at any time the presence of a trouble condition by dialing a number set aside for that purpose. This number shall also be accessible from lines classmarked for this feature.

(vi) When the alarm sending circuit seizes an interoffice operator trunk, the operator must dial the alarm checking code over another trunk before the first trunk can be released except where the alarm condition has disappeared first.

(vii) The alarm sending circuit shall have access to two or more trunks if the trunks are used for subscriber traffic.

(viii) An alarm indication of higher priority shall supersede an original alarm indication and reseize an interoffice operator trunk.

(ix) In any group of offices purchased under one contract, the same codes shall be used in each office for alarm checking and test.

(x) When the alarm checking number is dialed, the alarm indications received shall be as follows:

(A) Catastrophic alarm—No tone.

(B) Major alarm—Continuous busy tone 60 IPM, unless alarm is overridden.

(C) Minor alarm—Continuous 1-ring code ringback tone, unless alarm is overridden.

(D) No trouble—Continuous 2-ring code ringback tone, unless alarm is overridden.

(xi) Audible and visual local alarms and transmitted alarms shall be provided as follows:

	Delay Interval	
Classification	Local Alarms	Alarms Transmitted
Catastrophic	0	0
Major	0	0[1]
Minor	0	0–30 Min.

[1]Except no charge alarm delayed 15 minutes.

(xii) The central office alarm circuits shall be arranged to provide optional wiring to transmit either a minor alarm or a major alarm and a printout to accommodate various types of trunk and subscriber carrier systems, microwave, mobile radio, other transmission systems, and environmental protection systems with different priorities when a set of contacts is closed in the equipment of such systems and the alarm checking code is dialed. The alarm relay shall be furnished by the supplier of the carrier multiplex and/or mobile radio equipment. The option or options shall be specified by the owner.

(2) *Trouble location and test.* (i) *Equipment.* (A) A maintenance center shall be provided with a fault recorder (printer and/or display) for troubles. Here, system and sub-system visual trouble indications are shown for maintenance aid.

(B) The fault recorder shall provide a permanent or semi-permanent record of the circuit elements involved whenever a trouble is encountered. It shall be arranged to recognize an existing fault condition and not cause multiple printouts of the same fault, except during test routine.

(ii) *Maintenance system.* (A) The maintenance system shall monitor and maintain the system operation without interruption of call processing, except for major failures.

(B) The maintenance system shall provide both specialized maintenance hardware circuits and an extensive software package to enable maintenance to determine trouble to an individual card or functional group of cards.

(C) Maintenance programs may be both on-line and off-line. On-line maintenance programs are activated by system errors and shall be scheduled to execute call tests during low traffic periods and periodic hardware tests at specific time intervals. Programs shall provide diagnostic tools for the maintenance personnel and be initiated by them.

(D) Scheduled periodic hardware tests shall automatically detect faults and alert maintenance personnel via alarm or appropriate input/output device(s) at local and/or remote locations.

(E) Facilities shall be provided so that test calls can be set up using preselected items of switching equipment.

(F) The maintenance personnel shall be able to make tests to determine if every trunk and every item of switching equipment are functioning properly. Also, it shall be possible to make each trunk and each SPC equipment, or part thereof, busy to service calls. Where possible, equipment which is made busy to service calls shall still be accessible for test calls.

(iii) *Outside plant and subscriber stations.* (A) A subscriber loop test set or equivalent shall be provided either as a separate set or as a part of the maintenance center, as specified in item 11.2 of appendix A of this section. This circuit shall include a high resistance volt-ohm meter, wiring to tip and ring terminals to permit a portable wheatstone bridge to be used, an operator's telephone circuit, a dial circuit (and pushbutton dialing keys, if specified), outgoing trunks to dial equipment for access to lines under test without use of the main distributing frame (MDF) test shoe and the necessary test keys. No dry cell batteries shall be accepted for test potentials. Circuits shall be designed so that alternating current (ac) induction on the line will have no effect on dc measurements. All functions shall be under control of lever or pushbutton keys. As a minimum the test system shall:

(*1*) Test for bridged foreign electromotive force (EMF);

(*2*) Test for regular line battery;

(*3*) Test for booster battery voltage and polarity using the test shoe;

(*4*) Test for open circuits, short, tip ground, and ring ground;

(*5*) Test for tip or ring negative potential;

(*6*) Test for capacitance of a subscriber's line;

(*7*) Supply talking battery to the line with and without booster battery;

(*8*) Ring the subscriber through the test access circuit or through a test shoe;

(*9*) Test in and out of the central office; and

(*10*) Supply a reverse polarity key for voltage readings, except when positive or negative values are displayed directly.

(B) An acceptable arrangement for making the tests shown in paragraph (o)(2)(iii)(A) of this section is to have them under software control with results displayed at one of the system's I/O ports.

(C) A howler circuit for maintenance purposes, if ordered by the owner, shall have output tones which do not interfere with the pushbutton or multifrequency signaling tones. The harmonics of the output tones shall be attenuated at least 26 dB below the fundamental frequency for all load conditions. The frequency stability shall be 2 percent or less for all output tones when the unit is operated in the specified load and environmental range. It shall be possible to vary the output voltage (power) of the howler circuit. It shall remove tone and restore the line to service when the telephone instrument receiver is placed on-hook. The frequency of the output shall be chosen to be distinctive and urgent in order to attract the subscriber's attention to an off-hook situation.

(D) When a dial speed test facility is specified by the owner, it shall be accessed by dialing a special code and shall return to the calling station readily identifiable signals to indicate that the dial speed is slow, normal, or fast.

(E) When the office is arranged for pushbutton dialing, optional facilities shall be provided for testing the pushbutton dialing equipment at the subscriber station.

(F) When a system for testing subscriber lines in remote offices from a test position in a centrally located office is specified by the owner, it shall be capable of working with all the central offices and RST's in the remote areas. This testing equipment shall preferably be solid-state with a minimum of electromechanical devices and shall operate from central office battery. It shall be capable of working over any voice grade telephone circuit and shall not require a dedicated trunk. There shall be no interference to or from ''in-band'' voice channel tones. When used over a network, the verification or access shall be guarded to prevent unauthorized access by subscribers. Access to this system shall only be available to the test operator in all cases.

(3) *Transmission testing.* (i) When transmission test circuits are specified in Item 11.3 of appendix A of this section, they shall permit testing of trunks by a distant office without any assistance in the local dial office. Analog test ports shall meet appropriate trunk requirements. If Centralized Automatic Reporting on Trunks (CAROT), or equivalent, is to be used, the equipment at the end office shall comply with Bellcore document SR-TSV-002275, BOC Notes on the LEC Networks—1990, section 8, Item 2.

(ii) Transmission test circuits are available with a variety of options. These include single frequency and multifrequency tone generators with one or more generator output terminals, quiet terminations, and loop around test arrangements for both one-way and two-way trunks.

(iii) Where multifrequency generators are used, they are usually arranged to provide a minimum of three frequencies. With some equipment, up to seven additional frequencies may be provided if needed. No industry standardization of test frequencies is as yet provided. Therefore, it is important that the selection of frequencies, the order in which they are applied and the time interval for application of each frequency be agreed upon by the connecting company and the RUS borrower and listed in appendix A of this section in those situations where connecting companies request the installation of multifrequency generators in borrowers' central offices.

(iv) The milliwatt generator shall be solid-state and generate the analog or digital equivalent of 1004 Hz. The milliwatt generator shall be assigned to a 4-wire analog test port or be digitally generated. All 2-wire and 4-wire voice frequency ports are at a nominal 0 dBm0 level. The level of the 1004 Hz tone generator shall appear at outgoing 2-wire and 4-wire ports at 0 dBm ±0.5 dB. For direct digital connections, the encoded output shall be the digital equivalent of a 0 dBm0 ±0.5 dB signal.

(v) Reference tone generators can be used individually or they can be part of a loop around test arrangement. If both single frequency and multifrequency reference tone generators are to be provided, only one can be arranged as part of a loop around test. Where a loop around arrangement is provided, the generator output can be obtained by dialing singly one of the two line terminals. By dialing the other line terminal singly, usually a 900 ohm resistor in series with a 2.16 microfarad capacitor is connected to the circuit under test to act as a ''quiet termination'' for noise measurements and other tests. Whenever both line terminals are held simultaneously, both the milliwatt supply and the quiet termination shall be lifted off and a ''loop around'' condition established. This permits the overall loss to be determined from the distant office by going out over one trunk, looping around in the end office and returning over the other trunk. The insertion loss of this test arrangement when used in a loop around configuration should not exceed 0.1 dB at the frequencies specified for the milliwatt supply. Unless otherwise specified, continuous off-hook supervision is to be provided on both line terminals to prevent collusive calling without charge. It will be permissible to accomplish the quiet termination by opening the 4-wire path internally and to accomplish the loop around by digital switching.

(vi) Provision shall be made so that the milliwatt supply can be manually patched to circuits.

(vii) Test jack access shall be provided for all interoffice trunks of the voice frequency type. The jack access shall be properly designated for line, drop, monitor, and signaling leads plus any other jacks as requested by the owner. This may be accomplished by a set of jacks located at the maintenance center which have access to each trunk on a switching basis.

(p) *Traffic*—(1) *General engineering guidelines.* (i) The Traffic Table, based on the Erlang Lost-Calls-Cleared Formula, shall be used for determining the quantity of intraoffice paths, registers, and senders where full availability conditions apply. The following table shows the traffic capacity in CCS for 1 to 200 trunks at nine grades of service.

TRAFFIC TABLE

Full Availability for Random Traffic

LOST-CALLS-CLEARED

Offered Traffic Expressed in CCS

Number of Trunks	B-.001	.002	.005	.01	.02	.05	.1	.2	.5	Number of Trunks
1	0	0	0	0	1	2	4	9	36	1
2	2	3	4	5	8	14	22	36	98	2
3	7	9	13	17	22	32	46	69	165	3
4	16	19	25	31	39	55	74	106	234	4
5	27	32	41	49	60	80	104	144	304	5
6	41	48	58	69	82	107	135	184	374	6
7	57	65	78	90	106	135	168	224	445	7
8	74	83	98	113	131	163	202	265	516	8
9	92	103	120	136	156	193	236	307	586	9
10	111	123	143	161	183	224	270	348	656	10
11	131	145	166	186	210	255	306	391	729	11
12	152	167	190	212	238	286	341	433	801	12
13	174	190	215	238	266	318	377	476	872	13
14	196	213	240	265	295	350	413	519	944	14
15	219	237	266	292	324	383	449	562	1015	15
16	242	261	292	320	354	415	486	605	1087	16
17	266	286	318	347	384	449	523	648	1158	17
18	290	311	345	376	414	482	560	692	1230	18
19	314	337	372	404	444	515	597	735	1302	19
20	339	363	399	433	474	549	634	779	1374	20
21	364	388	427	462	505	583	671	823	1445	21
22	389	415	455	491	536	617	709	866	1517	22
23	415	441	483	521	567	651	747	910	1589	23
24	441	468	511	551	599	685	784	954	1661	24
25	467	495	540	580	630	720	822	998	1733	25
26	493	523	568	611	662	754	860	1042	1805	26
27	520	550	598	641	693	788	898	1086	1876	27
28	546	578	627	671	725	823	936	1130	1948	28
29	573	606	656	702	757	858	974	1174	2020	29
30	600	634	685	732	789	893	1012	1218	2092	30
31	628	662	715	763	822	928	1050	1263	2164	31
32	655	690	744	794	854	963	1089	1307	2236	32
33	683	719	774	825	887	998	1127	1351	2308	33
34	711	747	804	856	919	1033	1165	1395	2380	34
35	739	776	834	887	951	1068	1203	1439	2452	35
36	767	805	864	918	984	1104	1242	1484	2524	36
37	795	834	895	950	1017	1139	1281	1528	2595	37
38	823	863	925	981	1050	1174	1319	1572	2667	38
39	851	892	955	1013	1083	1210	1358	1617	2739	39
40	880	922	986	1044	1116	1246	1396	1661	2811	40
41	909	951	1016	1076	1149	1281	1435	1706	2883	41
42	937	980	1047	1108	1182	1317	1474	1750	2955	42
43	966	1010	1078	1140	1215	1352	1512	1795	3027	43
44	995	1040	1109	1171	1248	1388	1551	1839	3099	44
45	1024	1070	1140	1203	1282	1424	1590	1884	3171	45
46	1053	1099	1171	1236	1315	1459	1629	1928	3243	46
47	1083	1129	1202	1268	1349	1495	1668	1973	3315	47
48	1112	1159	1233	1300	1382	1531	1706	2017	3387	48
49	1141	1189	1264	1332	1416	1567	1745	2062	3459	49
50	1170	1220	1295	1364	1449	1603	1784	2106	3531	50
51	1200	1250	1327	1397	1483	1639	1823	2151	3603	51
52	1229	1280	1358	1429	1516	1675	1862	2195	3675	52
53	1259	1310	1390	1462	1550	1711	1901	2240	3747	53
54	1289	1341	1421	1494	1584	1747	1940	2285	3819	54
55	1319	1371	1453	1527	1618	1783	1979	2329	3891	55
56	1349	1402	1484	1559	1652	1819	2018	2374	3962	56
57	1378	1432	1516	1592	1686	1856	2057	2418	4034	57
58	1408	1463	1548	1625	1719	1892	2096	2463	4106	58
59	1439	1494	1579	1657	1753	1928	2136	2508	4178	59
60	1468	1525	1611	1690	1787	1965	2174	2552	4250	60
61	1499	1556	1643	1723	1821	2001	2214	2597	4322	61

TRAFFIC TABLE—Continued

Full Availability for Random Traffic

LOST-CALLS-CLEARED

Offered Traffic Expressed in CCS

Number of Trunks	B-.001	.002	.005	.01	.02	.05	.1	.2	.5	Number of Trunks
62	1529	1587	1675	1756	1855	2037	2253	2642	4394	62
63	1559	1617	1707	1789	1889	2073	2292	2687	4466	63
64	1590	1648	1739	1822	1923	2110	2331	2731	4538	64
65	1620	1679	1771	1855	1958	2146	2370	2776	4610	65
66	1650	1710	1803	1888	1992	2182	2409	2821	4682	66
67	1681	1742	1835	1921	2026	2219	2449	2865	4754	67
68	1711	1773	1867	1954	2060	2255	2488	2910	4826	68
69	1742	1804	1900	1987	2094	2291	2527	2955	4898	69
70	1773	1835	1932	2020	2129	2328	2566	3000	4970	70
71	1803	1867	1964	2053	2163	2364	2606	3044	5042	71
72	1834	1898	1997	2087	2197	2401	2645	3089	5114	72
73	1865	1929	2029	2120	2232	2438	2684	3134	5186	73
74	1895	1961	2061	2153	2266	2474	2723	3178	5258	74
75	1926	1992	2093	2186	2300	2511	2763	3223	5330	75
76	1957	2024	2126	2219	2335	2547	2802	3268	5402	76
77	1988	2055	2159	2253	2369	2584	2841	3313	5474	77
78	2019	2087	2191	2286	2404	2620	2881	3357	5546	78
79	2050	2118	2223	2319	2438	2657	2920	3402	5618	79
80	2081	2150	2256	2353	2473	2694	2959	3447	5690	80
81	2112	2182	2289	2386	2507	2730	2999	3492	5762	81
82	2143	2213	2321	2420	2542	2767	3038	3537	5834	82
83	2174	2245	2354	2453	2577	2803	3077	3581	5906	83
84	2206	2277	2386	2487	2611	2840	3117	3626	5977	84
85	2237	2309	2419	2521	2646	2877	3156	3671	6049	85
86	2268	2340	2452	2554	2680	2913	3196	3716	6121	86
87	2299	2372	2485	2588	2715	2950	3235	3761	6193	87
88	2331	2404	2517	2621	2750	2987	3275	3805	6265	88
89	2362	2436	2550	2655	2784	3024	3314	3850	6337	89
90	2393	2468	2583	2688	2819	3060	3353	3895	6409	90
91	2425	2500	2616	2722	2854	3097	3393	3940	6481	91
92	2456	2532	2649	2756	2889	3134	3432	3984	6553	92
93	2488	2564	2682	2790	2923	3171	3471	4029	6625	93
94	2519	2596	2715	2823	2958	3208	3511	4074	6697	94
95	2551	2628	2748	2857	2993	3244	3551	4119	6769	95
96	2582	2660	2781	2891	3028	3281	3590	4164	6841	96
97	2614	2692	2814	2925	3063	3318	3630	4209	6913	97
98	2645	2724	2847	2958	3097	3355	3669	4253	6985	98
99	2677	2757	2880	2992	3132	3392	3708	4298	7057	99
100	2709	2789	2913	3026	3167	3429	3748	4343	7129	100
105	2867	2950	3078	3196	3342	3613	3946	4567	7489	105
110	3027	3112	3244	3366	3516	3798	4143	4792	7849	110
115	3186	3275	3411	3536	3691	3983	4341	5016	8209	115
120	3347	3437	3578	3707	3867	4168	4539	5241	8569	120
125	3507	3601	3745	3878	4043	4353	4737	5465	8929	125
130	3669	3765	3912	4049	4219	4539	4935	5689	9289	130
135	3830	3929	4081	4221	4395	4724	5133	5914	9649	135
140	3992	4093	4249	4392	4571	4910	5332	6138	10009	140
145	4155	4258	4418	4564	4748	5095	5530	6363	10369	145
150	4318	4423	4586	4737	4925	5282	5728	6587	10729	150
155	4481	4589	4755	4909	5102	5467	5927	6812	11089	155
160	4644	4755	4925	5082	5279	5654	6125	7037	11449	160
165	4808	4920	5094	5255	5457	5840	6324	7261	11809	165
170	4972	5087	5264	5428	5634	6026	6523	7486	12169	170
175	5137	5253	5434	5602	5811	6213	6722	7710	12529	175
180	5301	5420	5604	5775	5989	6399	6920	7935	12889	180
185	5466	5587	5775	5949	6167	6586	7119	8160	13249	185
190	5631	5754	5945	6123	6345	6773	7318	8384	13609	190
195	5797	5922	6116	6296	6524	6960	7517	8609	13969	195
200	5962	6089	6287	6471	6702	7146	7716	8834	14329	200

(ii) The traffic capacity for all interoffice trunks shall be based on full availability, even though the distant office itself is not engineered to provide full availability access.

(iii) The Traffic Table may also be used to determine the approximate traffic capacity of high-usage intertoll trunks. The traffic offered to high-usage groups may be read at B.10, signifying that 10 percent of the traffic overflows to the alternate route. This approximates the HU12 table used by AT&T.

(iv) In reading the trunk quantity from the table, the higher quantity shall be used when the CCS load is three or more CCS over the lower quantity. For example, the number of trunks justified for 294 CCS at B.005 is 16, but for 295 CCS 17 trunks are justified.

(v) Limited availability is not permitted.

(vi) The traffic capacity in the following table should be used for small trunk groups such as pay station, special service trunks, intercept, and PBX trunks, unless otherwise specified in appendix A of this section:

Number of Circuits	Permissible CCS
1	10
2	20
3	30
4	40

(vii) The percentage of lines equipped for pushbutton dialing is to be used to determine the number of tone receivers. Local registers, if required, shall be supplied on the basis of all dial pulse.

(2) *Grade of service*. (i) Grade of service specifies the expected performance when there are adequate service facilities for an assumed volume of traffic. It is expressed as a portion of the total traffic during a busy hour that cannot be terminated immediately or within a predetermined time period due to congestion. This places responsibility on the traffic engineers to specify facilities which will be entirely satisfactory to the users and which can be equipped at a price which will be accepted as reasonable.

(ii) The number of calls encountering dial tone delay in excess of 3 seconds, measured over the busy hour of the four high-consecutive week (4HW) period, shall not be more than 1.5 percent.

(iii) The average post dialing delay objective for an intraoffice call shall not exceed 1 second. This includes all connect, operate, and translation time.

(iv) The line to line (intraoffice) network matching loss objective shall be 0.02 or less.

(v) The blocking probabilities related to trunks include both ''mismatch'' probability and probability of ''all trunks busy.'' It is likely that the ''mismatch'' will be negligible in that many digital central offices have essentially nonblocking switching characteristics. The objectives for trunk connections are as follows:

(A) Subscriber to outgoing trunk objective 0.01 or less;

(B) Incoming trunk to subscriber objective 0.02 or less; and

(C) Local trunk tandem objective 0.01 or less.

(vi) Groups of common service circuits are to be engineered utilizing the full availability traffic tables that appear in paragraph (p)(1)(i) of this section at the following stipulated probabilities:

(A) Outgoing trunks to 2/6 MF or dial pulse senders at B.001;

(B) Incoming trunks to 2/6 MF receivers at B.001;

(C) Incoming nondelay dial trunks to receivers at B.001; and

(D) Incoming trunks with start dial at B.01.

(vii) Remote Switching Terminals (RST's) shall meet the same grade of service objectives as the host.

(3) *Holding times*. For the purpose of estimating the quantity of common control circuits, the following average holding times may be used. These holding times are conservative and represent the average effective and ineffective call. If these holding times are to be used, it must be so stated in appendix A of this section.

(i) The following average call holding times (HT) may be used.

Type of Call	HT—Seconds
Intraoffice	120
EAS	150
Special Service, Intercept, Verification	60
Toll, CLR	300
Toll, S-S	24
Toll, PPCS	270

(ii) The following average subscriber dialing holding times may be used (times used to dial digits do not include machine time).

	Digits Dialed	DP Sec.	Push-button Sec.
Operator, Non-Pay Station	1	4.7	3.4
Special Service	3	7.7	5.0
Local	7	13.7	8.2
EAS	7	13.7	8.2
DDD: 1/0+7	8	15.2	9.0
DDD: 1/0+10	11	19.7	11.4
Dialing Time Per Digit	-	1.5	0.8
Dial Tone Response	-	3.2	2.6

(iii) The following average incoming register holding times may be used (times for digit registrations do not include machine time).

	Basic		Additional Per Digit
	Holding Time (Sec.)	Digits	
MF Receiver from:			
No. 5 Crossbar—Non-LAMA	1.4	4	0.14
No. 5 Crossbar—LAMA	2.3	4	0.14
Crossbar Tandem & 4A Toll	3.1	4	0.14
No. 1 ESS	1.4	4	0.14
Key Pulsing Switchboard	5.2	4	0.60
DP Receivers—10 PPS from:			
SxS	6.0	4	1.5
Dialing Switchboard	6.6	4	1.3
4A Toll	5.6	5[1]	-
Crossbar Tandem	4.9	4	1.2

[1]No reduction for fewer digits.

(iv) The following average sender holding times may be used (does not include machine setup and release time).

	Basic		Additional Per Digit
	Holding Time (Sec.)	Digits	
MF Senders:			
No. 5 Crossbar	1.5	4	0.14
Crossbar Tandem & 4A Toll[1]	2.0	4	0.14
TSP/TSPS	2.4	7	0.14
SxS—CAMA, Called Number	3.7	7	0.14
SxS—CAMA, Calling Number	1.3	7	-
DP Senders—10 PPS:			
With Overlap Pulsing[2]	9.1	Up to 6	1.8
Without Overlap Pulsing	4.6	4	1.2

[1]Add 1.3 seconds for ANI outpulsing on special toll (0+) calls and on DDD calls if AMA is not provided.

[2]Assumes overlap outpulsing starting on receiving of third digit; applies only to calls handled on direct trunk groups.

(4) *Traffic data requirements.* (i) Traffic measurements are composed of primarily two types—counts and usage. The following types of traffic data recording are required:

(A) *Peg count* registers shall be incremented when a successful network connection is established to a particular circuit group such as trunks, senders, digital receivers, etc.

(B) *Overflow count* registers shall be incremented when access to a particular circuit group is denied due to all resource busy condition.

(C) *Network blockage count* registers shall be incremented due to an unavailability of a path in an access or switching matrix network.

(D) *Usage* measurements of the length of time associated with a particular setup event or network connection shall be made. Usage data measurements are normally collected by scanning circuit groups resources every 10 or 100 seconds to determine busy/idle states. Measurements are accumulated and read directly in CCS (hundred call seconds).

(E) *Service delay* measurements shall provide percentage counts of the calls for a particular service that are delayed beyond a specified interval of time, e.g., calls not receiving dial tone within 3 seconds after call origination.

(ii) Traffic data shall be stored in electronic storage registers or block of memory consisting of one or more traffic counters for each item to be measured. The registers listed in paragraph (p)(4)(i) of this section shall be associated with the interoffice trunks, switching network and central control equipment in such a manner that the register readings can be used to determine the traffic load and flow to, from and within the system. Two-way trunks shall be metered to indicate inward and outward seizures. The bidder

shall indicate what registers are to be supplied and their purpose.

(iii) The measured data shall be shown on a printout. It should be possible to have local or remote printout, or both. Arrangement shall be made for automatic data printout on command for 15-, 30-, or 60-minute intervals as required, and be arranged for automatic start-stop and in accordance with revenue separation procedures current at the time of contract.

(iv) All traffic records shall have dates and times and office identification.

(q) *Transmission*—(1) *General*. The transmission characteristics will be governed by the fact that the switching matrix will be based on digital operation. Unless otherwise stated, the requirements are in terms of analog measurements made from Main Distributing Frame (MDF) to MDF terminals, excluding cabling loss.

(2) *Impedance*. For the purpose of this section, the nominal input impedance of analog ports in an end office shall be 900 ohms for 2-wire ports and 600 ohms for 4-wire ports. Where the connecting facility or equipment is other than this impedance, suitable impedance matching shall be provided by the bidder when specified by the owner.

(3) *Insertion loss*. The insertion loss in both directions of transmission at 1004 Hz shall meet the following requirements when measured with a 0 dBm input signal at 900 ohms (or 600 ohms, when required) at a temperature of 77 °F ±9 °F (25 °C ±5 °C).

(i) *Trunk-to-trunk or trunk-to-line*. The loss shall be set between 0 and 0.5 dB for 2-wire to 2-wire, 2-wire to 4-wire, or 4-wire to 4-wire voice frequency connections.

(ii) *Line-to-line*. The loss shall be set between 0 and 2 dB.

(iii) *Direct digital interface*. On a direct digital interface, the loss through the office shall be adjusted to the proper level in the receive side.

(iv) *Stability*. The long-term allowable variation in loss through the office shall be ±0.5 dB from the loss specified by the bidder.

(4) *Frequency response (loss relative to 1004 hz)* shall meet the following requirements.

(i) *Trunk-to-trunk*.

	Loss at 0 dBm0 Input[1]	
Frequency (Hz)	2-Wire to 2-Wire	4-Wire to 4-Wire
60	20 dB Min.[2]	16 dB Min.[2]
200	0 to 5 dB	0 to 3 dB
300–3000	−0.5 dB to 1 dB	−0.3 to +0.3 dB
3300	1.5 dB Max.	1.5 dB Max.
3400	0 to 3 dB	0 to 3 dB

[1](−) means less loss and (+) means more loss.
[2]Transmit End

(ii) *Line-to-line*.

Frequency (Hz)	Loss at 0 dBm0 Input[1]
60	20 dB Min.[2]
300	−1 to +3 dB
600–2400	±1 dB
3200	−1 to +3 dB

[1](−) means less loss and (+) means more loss.
[2]Transmit End

(iii) *Trunk-to-line*. The trunk-to-line frequency response requirements shall be a compromise between those values specified in paragraphs (q)(4)(i) and (q)(4)(ii) of this section.

(5) *Overload level*. The overload level at 900 ohm impedance shall be +3 dBm0.

(6) *Gain tracking (linearity)* shall meet the following requirements.

Input Signal Level[1]	Maximum Gain Deviation
+3 to −37 dBm0	±0.5 dB
−37 to −50 dBm0	±1 dB

[1]1004 Hz reference at 0 dBm0.

(7) *Return loss*. (i) The specified return loss values are determined by the service and type of port at the measuring (near) end. Two-wire ports are measured (near end) at 900 ohms in series with 2.16 microfarads and 4-wire ports are measured at 600 ohms resistive.

(ii) Far end test terminations shall be as follows:

(A) Loaded line circuit—1650 ohms in parallel with the series combination of .005 microfarads and 100 ohms;

(B) Nonloaded line circuit—800 ohms in parallel with the series combination of .05 microfarads and 100 ohms;

(C) Special service line circuit including electronic lines and carrier lines—900 ohms in series with 2.16 microfarads;

(D) Two-wire trunk—900 ohms in series with 2.16 microfarads; and

(E) Four-wire trunk—600 ohms.

(iii) For trunk-to-trunk (2-wire or 4-wire) connections the echo return loss (ERL) shall be 27 dB, minimum and the

singing return loss (SRL) shall be 20 dB, minimum low and 23 dB, minimum high.

(iv) For trunk-to-line (2-wire or 4-wire) connections the ERL shall be 24 dB, minimum and the SRL shall be 17 dB, minimum low and 20 dB, minimum high.

(v) For line-to-line or line-to-trunk (2-wire or 4-wire) connections the ERL shall be 18 dB, minimum and the SRL shall be 12 dB, minimum low and 15 dB, minimum high.

(8) *Longitudinal balance.* The minimum longitudinal balance, with dc loop currents of 20 to 70 mA, shall be 60 dB at all frequencies between 60 and 2000 Hz, 55 dB at 2700 Hz and 50 dB at 3400 Hz. The method of measurement shall be as specified in the IEEE Std 455–1985, IEEE Standard Test Procedure for Measuring Longitudinal Balance of Telephone Equipment Operating in the Voice Band. Source voltage level shall be 10 volts root-mean-square (rms).

(9) *60 hz longitudinal current immunity.* Under test conditions with 60 Hz, the system noise shall be no greater than 23 dBrnC0 as measured using the configuration in Figure 1.

FIGURE 1—MEASURING THE EFFECTS OF LOW FREQUENCY INDUCTION

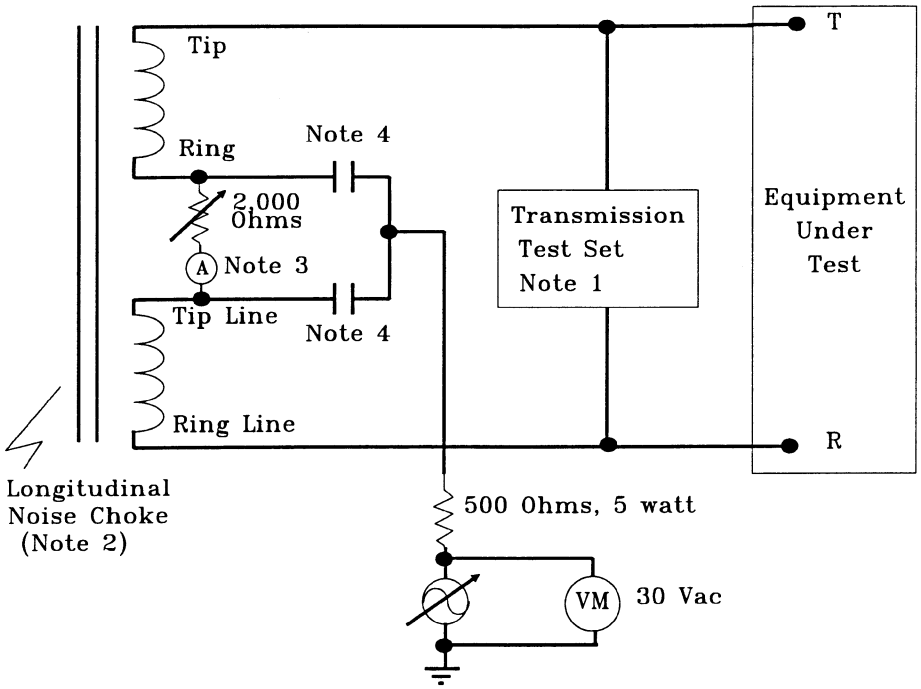

NOTES:
1. 900 ohm termination, C-message weighting, hold coil off
2. SNC Noise Choke 35 W, or equivalent
3. Test at 0.020 Adc and 0.070 Adc
4. 2 ±0.001 microfarad, 150 Vdc

(10) *Steady noise* (idle channel at 900 ohms impedance) measured on a terminated call shall be 23 dBrnC0 maximum and average 18 dBrnC0 or less. The 3K Hz Flat noise should be less than 35 dBrnC0 as an objective.

(11) *Impulse noise.* The central office switching equipment shall be capable of meeting an impulse noise limit of not more than five counts exceeding 54

dBrnC0 voice band weighted in a 5-minute period on six such measurements made during the busy hour. A Northeast Electronics Company TTS 4002 Impulse Noise Counter, Wilcom T194C, Hewlett Packard 4945, or equivalent, should be used for the measurements. The measurement shall be made by establishing a normal connection from the noise counter through the switching equipment in its off-hook condition to a quiet termination of 900 ohms impedance. Office battery and signaling circuit wiring shall be suitably segregated from voice and carrier circuit wiring, and frame talking battery filters provided, if and as required, in order to meet these impulse noise limits.

(12) *Crosstalk coupling*. Worst case equal level crosstalk is to be 75 dB minimum in the range 200–3400 Hz. This is to be measured between any two paths through the system connecting a 0 dBm0 level tone to the disturbing pair.

(13) *Quantizing distortion*. (i) The switching system shall meet the following requirements.

Input Level (dBm0) 1004 or 1020 Hz	Minimum Signal to Distortion with C-Message Weighting
0 to −30	33 dB
−30 to −40	27 dB
−40 to −45	22 dB

(ii) Due to the possible loss of the least significant bit on direct digital connections, a signal to distortion degradation of up to 2 dB may be allowed where adequately justified by the bidder.

(14) *Absolute delay*. The absolute one-way delay through the switching system, excluding delays associated with RST switching, shall not exceed 1000 microseconds analog-to-analog measured at 1800 Hz.

(15) *Envelope delay distortion*. On any properly established connection, the envelope delay distortion shall not exceed the following limits.

Frequency Range (Hz)	Microseconds
1000 to 2600	190
800 to 2800	350
600 to 3000	500
400 to 3200	700

(16) *Digital error rate*. The digital switching system shall not introduce an error into digital connections which is worse than one error in 10^8 bits averaged over a 5-minute period.

(17) *Battery noise*. Noise across battery at power board distribution bus terminals shall not exceed 35 dBrnC during the busy hour.

(18) Radio and television interference. The central office switching equipment shall be designed and installed so that radiation of high frequency noise will be limited so as not to interfere with radio and television receivers.

(r) *Timing intervals*—(1) *Type of equipment required*. The equipment for providing the specified timing intervals shall be solid-state.

(2) *Tolerance*. Where a range of time is specified as minimum and maximum, the lower limits shall be considered as controlling and the variation between this minimum and the actual maximum shall be kept as small as practicable. In no case shall the quoted upper limit be exceeded.

(3) *Permanent signal timing*. Lockout shall occur after an interval of 20 to 30 seconds after receipt of dial tone if a ''permanent'' condition occurs prior to the transmission of dial pulses or push-button dialing signals. This interval may be reduced appreciably during periods of heavy traffic.

(4) *Partial dial timing*. Partial dial timing shall be within 15 to 37 seconds. This timing may be reduced appreciably during periods of heavy traffic.

(5) *Charge delay timing*. Charge delay timing shall be within 2 seconds.

(6) *Called party disconnect timing*. Timed disconnect of a terminating path under control of the called party shall be 10 to 32 seconds.

(7) *Timing intervals for signals involved in distance dialing*. Timing intervals shall be provided to meet the requirements for distance dialing equipment, which have been established in Bellcore document SR-TSV-002275, BOC Notes on the LEC Networks—1990. Some of the more important times which this document specifies are for:

(i) Disconnect signal;

(ii) Wink signal;

(iii) Start dialing signal;

(iv) Pulse delay signal;

(v) Go signal;

(vi) Digit timing; and

(vii) Sender, register, and link attachment timing.

(s) *Power requirements and equipment*—(1) *Operating voltage*. The nominal operating voltage of the central office shall be 48 volts dc, provided by a battery with the positive side tied to system ground.

(2) *Batteries*. (i) When battery cells of the lead antimony type are specified, the pasted plate type shall be considered adequate.

(ii) When lead calcium cells are specified, no cell shall differ from the average voltage of the string of fully charged cells by more than ±0.03 volt when measured at a charging rate in amperes equivalent to 10 percent of the ampere hour capacity of the cells. Similarly, when cells are fully charged and floating between 2.30 and 2.33 volts per cell, the cell voltage of any cell in a given string shall not differ more than ±0.03 volt from the average. These requirements are for test purposes only and do not apply to operating conditions.

(iii) Voltage readings shall be corrected by a temperature coefficient of 0.0033 volt per degree F (0.006 per degree C), whenever temperature variations exist between cells in a given string. This correction factor shall also be applied when comparing cell voltages taken at different times and at different temperatures. The correction factor shall be added to the measured voltage when the temperature is above 77 °F (25 °C) and subtracted when the temperature is below 77 °F (25 °C).

(iv) The specific gravity readings of lead antimony cells at full charge shall be 1.210 ±.010 at 77 °F (25 °C) at maximum electrolyte height.

(v) When counter cells are supplied by the bidder, they shall be the dry counter electromotive force (CEMF) type.

(vi) When lead antimony batteries are specified, they shall be designed to last a minimum of 10 years when maintained on a full float operation between 2.15 and 2.17 volts per cell. When lead calcium batteries are specified, they shall be designed to last a minimum of 20 years when maintained on full float operation between 2.17 and 2.25 volts per cell. The battery shall be clearly designated as ''antimony'' or ''calcium'' by means of stencils, decals or other devices.

(vii) Each battery cell shall be equipped with an explosion control device.

(viii) The battery size shall be calculated in accordance with standard procedures. The battery in no case shall have a reserve capacity in ampere hours less than four times the current capacity of the largest charger.

(3) *Charging equipment*. (i) Charging shall be on a full float basis. The rectifiers shall be of the full wave, self-regulating, constant voltage, solid-state type and shall be capable of being turned on and off manually.

(ii) When charging batteries, the voltage at the battery terminals shall be adjustable and shall be set at the value recommended for the particular battery being charged, providing it is not above the maximum operating voltage of the switching system equipment. The voltage shall not vary more than plus or minus 0.02 volt per cell between 10 percent load and 100 percent load. Between 3 percent and 10 percent load, the output voltage shall not vary more than plus or minus 0.04 volt per cell. Beyond full load current, the output voltage shall drop sharply. The output voltage shall be maintained with the line voltage variations of plus or minus 10 percent. Provision shall be made to change the output voltage of the rectifier manually to 2.25 volts per cell to provide an equalization charge on the battery.

(iii) The charger noise shall not exceed 22 dBrnC when measured with a suitable noise measuring set and under the rated battery capacitance and load conditions as determined in Figure 2.

FIGURE 2—CHARGER NOISE TEST

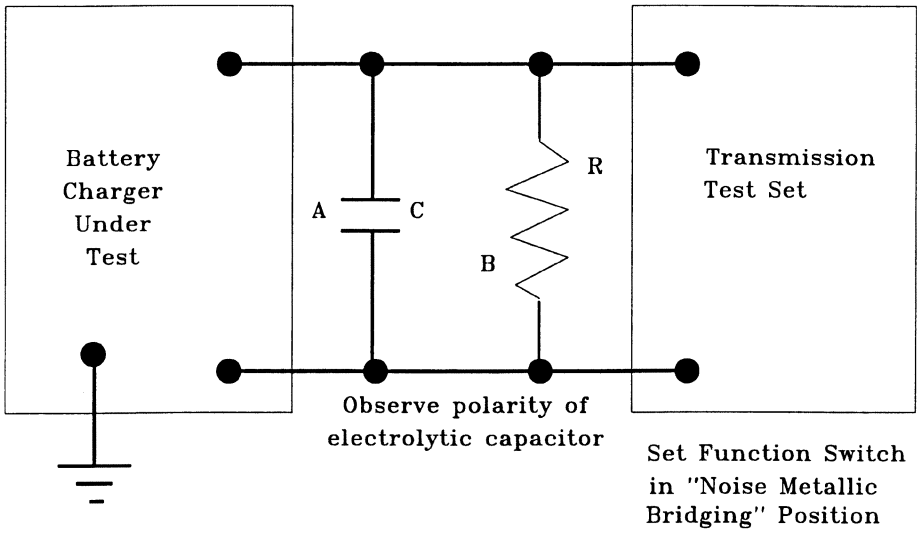

The manufacturer may elect to eliminate the capacitor C from the measurement.

A. Capacitance in μF = 30,000 μF per ampere-hour per cell. For example, 25 cells at 100 ampere-hour would be equivalent to a capacitance of:

$(30{,}000 \times 100)/25 = 120{,}000\ \mu F$

B. The value of the resistive load R is determined by the nominal battery voltage in volts divided by the full load rating in amperes. For example, for a 48 volt battery and a full load current of 24 amperes, the load resistance R is 48/24 = 2 ohms of appropriate power handling capacity.

(iv) The charging equipment shall indicate a failure of charging current, whether due to ac power failure, an internal failure in the charger, or to other circumstances which might cause the output voltage of the charger to drop below the battery voltage. Where a supplementary constant current charger is used, an alarm shall be provided to indicate a failure of the charger.

(v) Audible noise developed by the charging equipment shall be kept to a minimum. Acoustic noise resulting from operation of the rectifier shall be expressed in terms of dB indicated on a sound level meter conforming to ANSI S1.4–1983, Specification for Sound Level Meters, and shall not exceed 65 dB (A-weighting) measured at any point 5 feet (152.4 cm) from any vertical surface of the rectifier.

(vi) The charging equipment shall be designed so that neither the charger nor the central office switching equipment is subject to damage in case the battery circuit is opened for any value of load within the normal limits.

(vii) The charging equipment shall have a capacity to meet the requirements of central office size and special requirements of the owner in appendix A of this section.

(viii) Minimum equipment requirement for chargers is one of the following:

(A) Two chargers either capable of carrying the full office load as specified in Item 12 of appendix A of this section; or

(B) Three chargers each capable of carrying half the office load as specified in Item 12 of appendix A of this section.

(4) *Miscellaneous voltage supplies.* (i) Any power supply required for voltages other than the primary battery voltage shall be provided by either a solid-state dc-to-dc converter or dc-to-ac inverter,

operating from the central office battery or from a separate battery and charger. These power supplies shall meet the noise limit specified for chargers in paragraph (s)(3)(iii) of this section, except the capacitor ''C'' shall be eliminated and the resistive load ''R'' shall be determined by the nominal output voltage in volts divided by the full load current rating in amperes. This requirement does not preclude the use of commercial ac power to operate input/output devices.

(ii) Power converters required for the purpose of providing various operating voltages to printed circuit boards or similar equipment employing electronic components shall be provided in duplicate with each unit capable of immediately assuming the full operating load upon failure of a unit. An exception to the duplicate power converter requirement permits nonduplicated power converter(s) to be utilized where there is full compliance with the following criteria.

(A) The failure of any single nonduplicated power converter shall not reduce the grade of service of common control and service circuits to any individual line or trunk by more than 50 percent.

(B) The failure of any single nonduplicated power converter shall not reduce the traffic carrying capacity of any interoffice trunk group by more than 50 percent.

(C) In central office switching systems of 400 or more equipped lines, any single nonduplicated power converter failure shall not cause a complete loss of service to more than 100 equipped lines.

(D) In central office switching systems of less than 400 equipped lines, any single nonduplicated power converter failure shall not cause a complete loss of service to more than 25 percent of the total equipped lines.

(5) *Ringing generators.* Ringing generators supplied on an ancillary basis shall be selected from RUS Bulletin 1755I-100, List of Materials Acceptable for Use on Telephone Systems of RUS Borrowers. Regardless of whether the ringing is generated on an ancillary basis or is generated integrally to the switching system, the ringing equipment shall meet the requirements of this section.

(i) *Ringing equipment provisioning.* (A) Redundant ringing equipment shall be provided. There shall be automatic transfer to the redundant equipment within the period of one ringing cycle, in case of failure of the equipment in use (either regular or standby). Automatic transfer shall not take place under any other conditions. Manual transfer in each direction shall be provided.

(B) An exception to the redundant ringing equipment requirement permits nonredundant ringing equipment to be utilized where there is full compliance with the following service criteria.

(*1*) In a central office switching system of 400 or more equipped lines, a single nonduplicated ringing source failure shall not cause the complete loss of ringing capability to more than 100 lines.

(*2*) In a central office switching system of less than 400 equipped lines, a single nonredundant ringing source failure shall not cause the complete loss of ringing capability to more than 25 percent of the total equipped lines.

(ii) *Output voltage.* (A) The ringing generators shall have an output voltage which approximates a sine wave and, as a minimum, shall be suitable for ringing straight-line ringers. Although not a requirement for RUS listing, decimonic, synchromonic, or harmonic ringing may also be specified in appendix A of this section.

(B) The ringing generator shall obtain its energy from the nominal 48-volt office battery.

(C) The output of each generator shall have three or more voltage taps or a single tap with associated variable control. Taps or control shall be easily accessible as installed in the field. Software control of ringing generator outputs via I/O devices may be provided in lieu of taps. The taps, or equivalent, shall be designated L, M, and H. The variable control shall have a locking device to prevent accidental readjustment. The outputs at the terminals of the generators with a voltage input of 52.1 volts and rated full resistive load shall be as follows for the ringing frequencies provided:

Frequency Range (Hz)	Output Volts rms (Tolerance 3 Volts)		
	L	M	H
16 2/3 through 20	90	105	120
21 through 30	95	110	120
31 through 42	100	115	130
43 through 54	110	125	140

(D) No voltages in excess of the values in column H of the table in paragraph (s)(5)(ii)(C) of this section shall be provided at the output taps. Additional intermediate and/or lower taps may be provided without restriction.

(iii) *Voltage regulation.* (A) The output voltage for resistive, capacitive power factor of 0.8, and inductive power factor of 0.5 loads from no load to full rated output with 52.1 volts input battery shall not vary more than ±3 percent from the output voltage measured at 1/2 rated output, 1.0 power factor with 52.1 volts dc input applied.

(B) The output voltage for resistive, capacitive power factor of 0.8, and inductive power factor of 0.5 from no load to full rated output with input battery variations between 48–56 volts dc shall not vary more than ±10 percent from the output voltage measured at 1/2 rated output and 1.0 power factor with 52.1 volts dc input applied.

(C) The output voltage for resistive, capacitive power factor of 0.8, and inductive power factor of 0.5 loads from no load to full rated output and with input battery variations between 44–56 volts dc shall not vary more than +10/−15 percent from the output voltage measured at 1/2 rated output and 1.0 power factor with 52.1 volts dc input applied.

(iv) *Cross ringing.* Unwanted voltage caused by harmonic distortion or intermodulation distortion shall not exceed 15 volts rms when measured within ±5 Hz of any other assigned ringing frequency under any condition of load or input battery specified by paragraph (s)(5)(iii) of this section.

(v) *Frequency stability.* At ambient temperature of 70 ° ±5 °F (21 ° ±0.3 °C), for any combination of capacitive power factor of 0.8, inductive power factor of 0.5, and resistive loads with variations in input battery ranging from 44 to 56 volts, the output frequency shall not vary more than ±1/3 Hz or ±1 percent, whichever is less stringent. At temperatures between 15 °F (4 °C) to 130 °F (54 °C), and for any combination of resistive load and variations in input battery ranging from 44–56 volts, the output frequency shall not vary more than ±1/3 Hz or ±1 percent, whichever is less stringent.

(vi) *Self-protection on overloads.* The ringing generator equipment shall be capable of withstanding a short circuit across any pair of output terminals for a period of 5 minutes without fuse operation or damage.

(6) *Interrupter equipment.* (i) The interrupter shall be an integral part of the switching system and shall be controlled by any call processor or equivalent.

(ii) The ringing cycle provided by the interrupter equipment shall not exceed 6 seconds in length. The ringing period shall be 2 seconds.

(7) *Power panels.* (i) Battery and charger control switches, dc voltmeters, dc ammeters, fuses and circuit breakers, supervisory and timer circuits shall be provided as required. Voltmeters shall be provided as specified by the owner.

(ii) Portable or panel mounted frequency meters shall be provided as specified by the owner unless the system is equipped to measure actual ringing generator voltage and frequency outputs internally. If the system is equipped to make such measurements and print the results, the bidder is not required to provide a frequency meter.

(iii) Power panels, cabinets and shelves, and associated wiring shall be designed initially to handle the exchange when it reaches its ultimate capacity as specified by the owner.

(iv) The power panel shall be of the ''dead front'' type.

(t) *Main distributing frames.* (1) The main distributing frame shall provide terminals for terminating all incoming cable pairs. Arresters shall be provided for all incoming cable pairs, or for a smaller number of pairs if specified, provided an acceptable means of temporarily grounding all terminated pairs which are not equipped with arresters is furnished.

(2) The current carrying capacity of each arrester and its associated mounting shall coordinate with a #22 gauge

copper conductor without causing a self-sustaining fire or permanently damaging other arrester positions. Where all cable pairs entering the central office are #24 gauge or finer, the arresters and mountings need only coordinate with #24 gauge cable conductors. Item 13 of appendix A of this section designates the gauge of the cable conductors serving the host office. Item 7 of appendix B of this section designates the gauge of the cable conductors serving the RST(s).

(3) Central office protectors shall be mounted and arranged so that outside cable pairs may be terminated on the left side of protectors (when facing the vertical side of the MDF) or on the back surface of the protectors. Means for easy identification of pairs shall be provided.

(4) Protectors shall have a ''dead front'' (either insulated or grounded) whereby live metal parts are not readily accessible.

(5) Protectors shall be provided with an accessible terminal of each incoming conductor which is suitable for the attachment of a temporary test lead. They shall also be constructed so that auxiliary test fixtures may be applied to open and test the subscriber's circuit in either direction. Terminals shall be tinned or plated and shall be suitable for wire wrapped, insulation displacement or connectorized connections.

(6) If specified in appendix A of this section, each protector group shall be furnished with a factory assembled tip cable for splicing to the entrance cable; the tip cable to be 20 feet (610 cm) in length unless otherwise specified. Factory assembled tip cable shall be #22 gauge and selected from RUS Bulletin 1755I-100, List of Materials Acceptable for Use on Telephone Systems of RUS Borrowers. Tip cable requirements are provided in RUS Bulletin 345–87, PE-87, RUS Specification for Terminating (TIP) Cable. Cables having other kinds of insulation and jackets which have equivalent resistance to fire and which produce less smoke and toxic fumes may be used if specifically approved by RUS.

(7) Protectors shall be mounted on vertical supports, with centers not exceeding 9 inches (22.9 cm). The space between protector units shall be adequate for terminating conductors.

(8) Cable supporting framework shall be provided between the cable entrance and the MDF when overhead cable entrance is specified in Item 14.3.3 of appendix A of this section.

(9) The main distributing frame shall be equipped with a copper ground bus bar having the conductivity of a #6 American Wire Gauge (AWG) copper conductor or a greater conductivity, or may consist of another metal if specifically approved, provided it has adequate cross-sectional area to provide conductivity equivalent to, or better than, bare copper. A guardrail or equivalent shall also be furnished.

(10) Other features not specified in paragraph (t) of this section may be required at the option of the owner, if checked in Item 13.4 of appendix A of this section.

(11) Main frame protector makes and types shall be selected only from RUS Bulletin 1755I-100, List of Materials Acceptable for Use on Telephone Systems of RUS Borrowers. Protectors shall be capable of easy removal.

(u) *Electrical protection*—(1) *Surge protection*. (i) Adequate electrical protection of central office switching equipment shall be included in the design of the system. The characteristics and application of protection devices shall be such that they enable the central office switching equipment to withstand, without damage or excessive protector maintenance, the dielectric stresses and currents that are produced in line-to-ground and tip-to-ring circuits through the equipment as a result of induced or conducted lightning or power system fault-related surges. All wire terminals connected to outside plant wire or cable pairs shall be protected from voltage and current surges.

(ii) Central office switching equipment shall pass laboratory tests, simulating the hostile electrical environment, before being placed in the field for the purpose of obtaining field experience. There are five basic types of laboratory tests which shall be applied to exposed terminals in an effort to determine if the equipment will survive. Figure 3 summarizes these tests and the minimum acceptable levels of protection for equipment to pass them.

FIGURE 3—SUMMARY OF ELECTRICAL REQUIREMENTS AND TESTS

Test	Application Criteria	Peak Voltage or Current	Surge Waveshape	No. of Applications & Max. Time Between	Comments
Current Surge	Low Impedance Paths Exposed to Surges	500A or Lesser Current (See Fig. 5)	10×1000 μs	5 each Polarity at 1 minute intervals	
60 Hz Current Carrying	High or Low Impedance paths Exposed to Surges	10A rms or Lesser Current (See Fig. 6)	11 Cycles of 60 Hz (0.183 Sec.)	3 each Polarity at 1 minute intervals	
AC Power Service Surge Voltage	AC Power Service Connection	2500V or +3 σ clamping V of arrester employed at 10kV/μs	1.2×50 μs	5 each Polarity at 1 minute intervals	AC arrester, if used, must be removed. Communications line arresters, if used, remain in place.
Voltage Surge	High Impedance Paths Exposed to Surges	1000V or +3 σ dc breakdown of arrester employed	10×000 μs	Same	All primary arresters, if used, must be removed.
Arrester Response Delay	Paths protected by arresters, such as gas tubes, with breakdown dependent on V. rate of rise.	+3 σ breakdown of arrester employed at 100V/μs of rise	100V/μs rise decay to 1/2 V. in tube's delay time	Same	Same

(iii) *Two categories of surge tests.* (A) Current surge tests simulate the stress to which a relatively low impedance path may be subjected before main frame protectors break down. Paths with a 100 Hz impedance of 50 ohms or less shall be subjected to current surges, employing a 10 × 1000 microseconds waveshape as defined in Figure 4. For the purpose of determining this impedance, arresters which are mounted within the equipment are to be considered zero impedance. The crest current shall not exceed 500A; however, depending on the impedance of the test specimen this value of current may be lower. The crest current through the sample, multiplied by the sample's 100 Hz impedance, shall not exceed 1000 volts (V). Where sample impedance is less than two ohms, crest current shall be limited to 500A as shown in Figure 5.

FIGURE 4—EXPLANATION OF SURGE WAVESHAPE

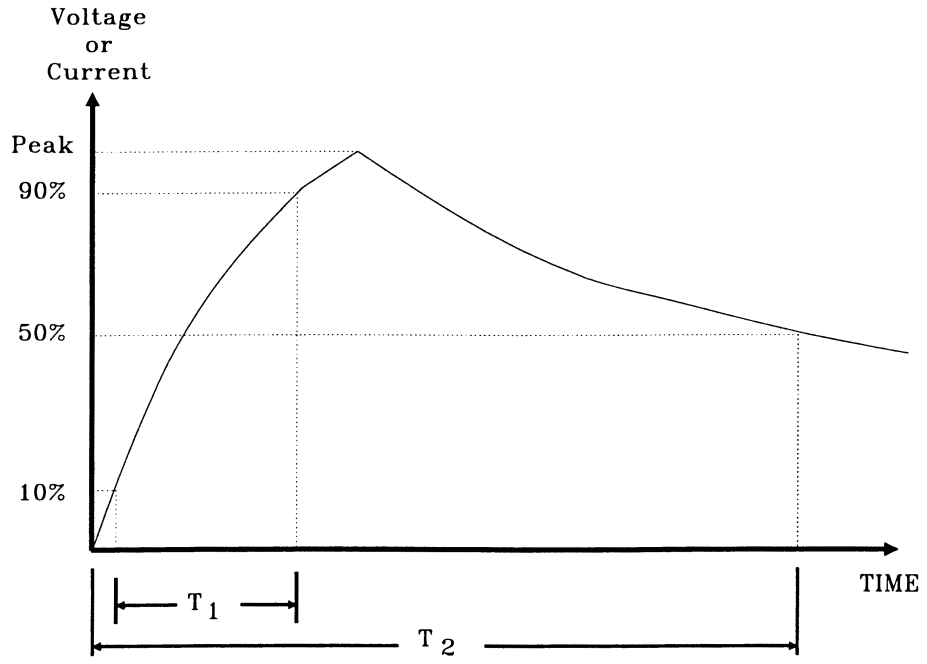

Surge Waveshape is defined as follows:

Rise Time × Time to Decay to Half Crest Value

(For example, 10 × 1000 μs)

Notes:

T_1 = Time to determine the rate of rise. The rate of rise is determined as the slope between 10% and 90% of peak voltage or current.

T_2 = Time to 50% of peak voltage (decay to half value).

FIGURE 5—EXPLANATION OF SURGE WAVESHAPE

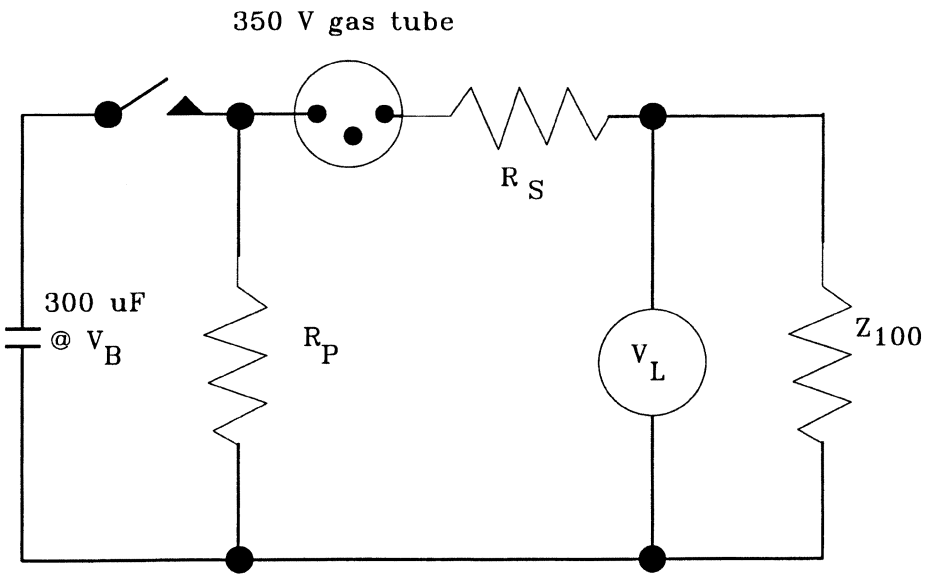

V_L = Not to exceed 1000V
V_B = Charging Voltage
Z_{100} = Test Specimen Impedance to be measured at 100 Hz.
R_P = Parallel Resistance (Waveshape)
R_S = Series Resistance (Current Limiting)

Z_{100}	R_S	R_P	V_B
0	5	∞	2500
1	4	∞	2500
2	3	∞	2500
3	2	∞	1670
4	1	∞	1250
5	0	∞	1000
7.5	0	15	1000
10	0	10	1000
15	0	7.5	1000
20	0	6.7	1000
25	0	6.25	1000
30	0	6	1000
40	0	5.7	1000
50	0	5.5	1000

(B) Sixty Hertz (60 Hz) current-carrying tests should be applied to simulate an ac power fault which is conducted to the unit over the cable pairs. The test should be limited to 10 amperes rms at 60 Hz for a period of 11 cycles (0.1835 seconds) and should be applied longitudinally from line to ground (see Figures 3 and 6 of this section).

FIGURE 6—60 HZ CURRENT SURGE TEST

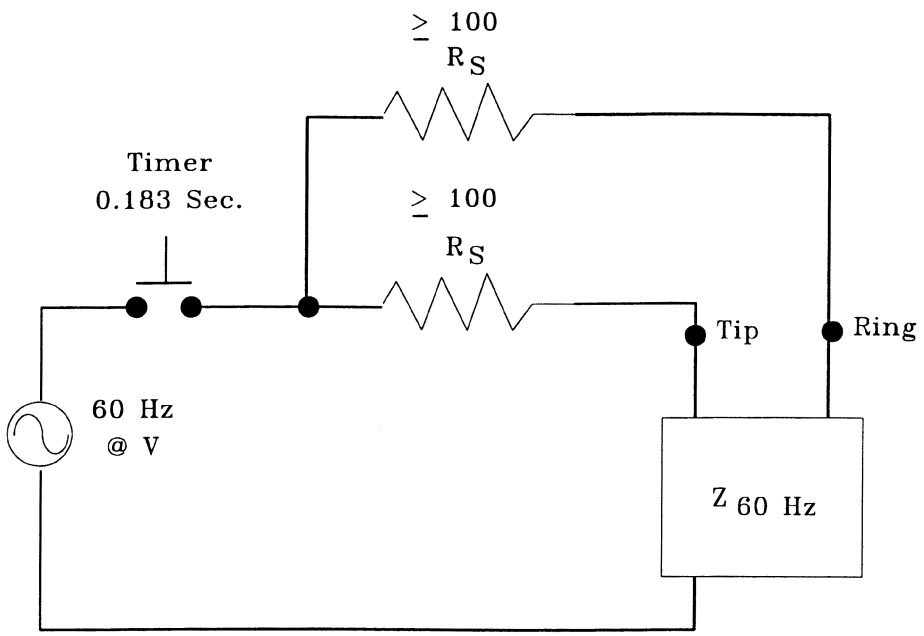

V—700 Volts RMS (Approximately 1000V Peak).

Z_{60}—Test specimen impedance to be measured at 60 Hz.

R_S—Series Resistance (current limiting) in each side of line. (Source impedance never less than 50 Ω longitudinal.)

Z_{60} Hz	R_S
0	140
10	120
20	100
50	100
Over 50	100

(C) AC power service surge voltage tests should be applied to the power input terminals of ac powered devices to simulate switching surges or lightning-induced transients on the ac power system. The test shall employ a 1.2 × 50 microseconds waveshape with a crest voltage of 2500V. Communications line protectors may be left in place for this test. Borrowers are urged to install commercially available surge protectors at the ac service entrance as part of their COE building program.

(D) Voltage surge tests simulate the voltage stress to which a relatively high impedance path may be subjected before primary protectors break down and protect the circuit. To assure coordination with the primary protection while reducing testing to the minimum, voltage surge tests should be conducted at a 1000 volts with primary arresters removed for devices protected by carbon blocks, or the +3 sigma dc breakdown of other primary arresters. Surge waveshape should be 10 × 1000 microseconds.

(E) Arrester response delay tests are designed to stress the equipment in a manner similar to that caused by the delayed breakdown of gap type arresters when subjected to rapidly rising voltages. Arresters shall be removed for these tests, the peak surge voltage should be the +3 sigma breakdown of the arrester in question on a voltage rising at 100V per microsecond and the time for the surge to decay to half voltage shall equal at least the delay time of the tube, as explained in Figure 7.

FIGURE 7—EXPLANATION OF ARRESTER RESPONSE DELAY TIME

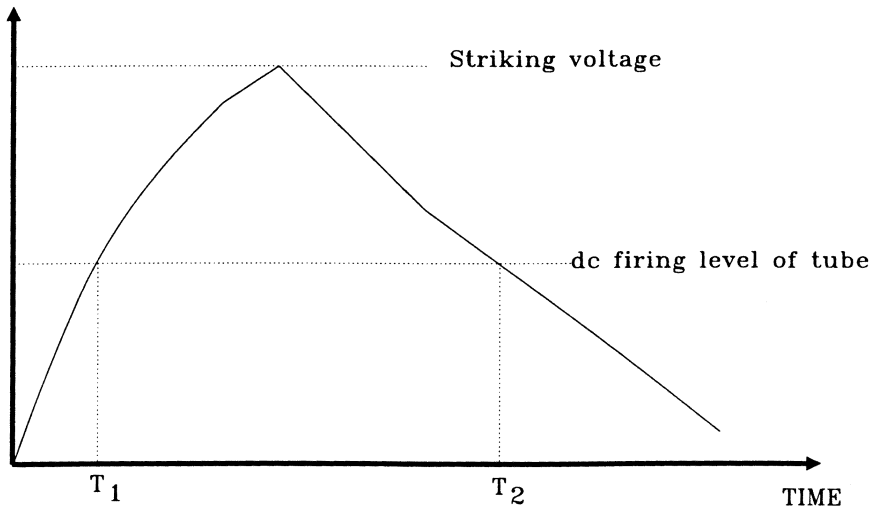

$D = T_2 - T_1$ = Delay time of tube

The delay time is that period of time when the potential across an arrester exceeds its dc firing level.

(iv) Five applications of each polarity for the surge tests and three for the 60 Hz Current Carrying Test are the minimum required. All tests should be conducted with not more than 1 minute between consecutive applications in each series of three or five to a specific configuration so that heating effects will be cumulative. As not all tests are required in every application, non-applicable tests should be omitted. Tests should be conducted in the following sequence.

(A) Current Impulse Test.

(B) Sixty Hertz (60 Hz) Current Carrying Test.

(C) AC Power Service Impulse Voltage Test.

(D) Voltage Impulse Test.

(E) Arrester Response Delay Test.

(v) Tests should be applied between each of the following terminal combinations for all line operating conditions.

(A) Line tip to ring.

(B) Line ring to ground.

(C) Line tip to ground.

(D) Line tip to ring tied together to ground.

(2) *Extraordinary surge protection.* A central office or RST may be located in an area where ground conditions prevent the reasonable economic achievement of a low resistance to ground and/or there exists a greater than average probability of surge damage. Such an unusually hostile operating environment shall be recognized and taken into consideration by the bidder in the engineering and specification of the central office switching system and line protection. This subject of operating environment, ground conditions, etc., should be discussed at the time of technical presentation to assure the owner that adequate system protection will be provided by the bidder.

(3) *Dielectric strength.* Arresters shall be removed for all dielectric strength tests. The duration of all dielectric strength tests shall be at least 1 second. The applied potential shall equal or exceed the +3 sigma dc breakdown voltage of the arrester, provided by the

COE manufacturer. Direct current potentials shall be applied between all line terminals and equipment chassis and between these terminals and grounded equipment housings in all instances where the circuitry is dc open circuit from the chassis, or connected to the chassis through a capacitor.

(4) *Insulation resistance*. Following the dielectric tests, the insulation resistance of the installed electrical circuits between wires and ground, with the normal equipment grounds removed, shall not be less than 10 megohms at 500 volts dc at approximately room temperature (68 °F (20 °C)) and at a relative humidity of approximately 50 percent. The measurement shall be made after the meter stabilizes, unless the requirement is met sooner. Arresters shall be removed for these tests.

(5) *Self-protection*. (i) All components shall be of the self-protecting type, capable of being continuously energized at rated voltage without injurious results.

(ii) The unit equipment shall not be permanently damaged by accidental short circuits of any duration across either the central office side tip and ring or the line side tip and ring. A test is to be made with the unit energized at the highest recommended voltages.

(6) *Static discharge*. Assemblies subject to damage by static discharge shall be identified and special handling instructions shall be supplied.

(v) *Miscellaneous*—(1) *Office wire*. All office wire shall be of soft annealed tinned copper wire meeting the requirements of ASTM Specification B 33–91, Standard Specification for Tinned Soft or Annealed Copper Wire for Electrical Purposes, and of suitable cross-section to provide safe current carrying capacity and mechanical strength. The insulation of installed wire, connected to its equipment and frames, shall be capable of withstanding the same insulation resistance and dielectric strength requirements as given in paragraphs (u)(3) and (u)(4) of this section at a temperature of 120 °F (49 °C) and a relative humidity of 90 percent.

(2) *Wire wrapped terminals*. These terminals are preferred and where used shall be of a material suitable for wire wrapping. The connections to them shall be made with a wire wrapping tool with the following minimum number of successive nonoverlapping turns of bare tinned copper wire in contact with each terminal.

(i) 6 Turns of 30 Gauge.

(ii) 6 Turns of 26 Gauge.

(iii) 6 Turns of 24 Gauge.

(iv) 5 Turns of 22 Gauge.

(3) *Protection against corrosion*. All metal parts of equipment frames, distributing frames, cable supporting framework, and other exposed metal parts shall be constructed of corrosion resistant materials or materials plated or painted to render them adequately corrosion resistant.

(4) *Screws and bolts*. Screw threads for all threaded securing devices shall be of American National Standard form in accordance with Federal Standard H28, Screw-Thread Standards for Federal Services, unless exceptions are granted to the manufacturer of the switching equipment. All bolts, nuts, screws, and washers shall be of nickel-copper alloy, steel, brass or bronze.

(5) *Temperature and humidity range*. The supplier shall furnish the operating temperature and humidity ranges of the equipment being provided in order that adequate heating and cooling may be supplied (see Items 5.2.1 and 5.2.2 of appendix C of this section).

(6) *Stenciling*. Equipment units and terminal jacks shall be adequately designated and numbered. They shall be stenciled so that identification of equipment units and leads for testing or traffic analysis can be made without unnecessary reference to prints or descriptive literature.

(7) *Equipment frame design*. For newly designed systems, consideration should be given to the desirability of providing frames which can be installed in rooms of normal ceiling height [up to 10 feet (305 cm)]. Where feasible, frames and equipment units shall be designed for ready portability and high salvage value.

(8) *Quantity of equipment bays*. Consistent with system arrangements and ease of maintenance, space shall be provided on the floor plan for an orderly layout of future equipment bays that will be required for anticipated traffic when the office reaches its ultimate size. Readily accessible terminals

shall be provided for connection to interbay and frame cables to future bays. All cables, interbay and intrabay (excluding power), if technically feasible, shall be terminated at both ends by use of connectors.

(w) *Remote switching terminal (RST)*—(1) *General*. The RST is a remotely located digital switching terminal which is placed at a subordinate wire center for subscriber lines and is a part of the host central office from a switching standpoint, and has hardware interchangeable with the host office, except for items that are applicable only to RST control and associated peripheral equipment. This does not preclude the use of existing in-service remote units on a new or upgraded host central office of the latest series generic or release.

(2) *Span line*. The RST is to be connected to the host central office via a means compatible with T1 type span lines using a DS-1 interface. This connection will be for control supervision and subscriber communication. The RUS equipment specification for a span line is PE-60.

(3) *Switching*. (i) The RST may have its switching functions controlled either by the host central office stored program control processors or by local subordinate processors which communicate with the host office processors.

(ii) As long as the connecting span line is intact, the subscribers served by the RST shall have all features, traffic capacity, and services including busy verification, available to all other subscribers in the system.

(iii) The RST shall have available an emergency call processing option which permits calling among all subscribers and from subscribers to emergency numbers within the RST if control link connections to the host central office are severed or otherwise disabled. The RST shall be capable of rerouting normally used emergency numbers, such as 911, to predetermined line terminations in this emergency standalone operating condition. This RST emergency call processing option shall be provided only when specified by the owner in Item 6.1 of appendix B of this section.

(4) *Subscriber line test*. (i) Means shall be available on an optional basis to the maintenance personnel to make subscriber line tests from a common location for all subscriber lines including the RST.

(ii) If tests in paragraph (w)(4)(i) of this section are not requested by the owner for a particular installation, a subscriber loop test set (see paragraph (o)(2)(iii)(A) of this section) shall be supplied at the RST with a means to access all lines.

(5) *Housing*. When housed in a building supplied by the owner, a complete floor plan including ceiling height, power outlets, cable entrances, equipment entry and travel, type of construction, and other pertinent dimensions shall be supplied with this section.

(6) *Power*—(i) *Chargers*. A single charger meeting the requirements of paragraph (s)(3) of this section (with the exception of paragraph (s)(3)(viii) of this section) is required. An additional charger capable of carrying the full load or a combination of three chargers each capable of carrying half the load shall be supplied if redundant chargers are specified in appendix B of this section.

(ii) *Ringing equipment provisioning*. (A) Ringing sources shall be supplied in duplicate.

(B) An exception to the duplicated ringing source requirement permits nonduplicated ringing source(s) to be utilized where there is full compliance with the following service criteria.

(*1*) In a remote switching terminal (RST) of 400 or more equipped lines, a single nonduplicated ringing source failure shall not cause the complete loss of ringing capability to more than 100 lines.

(*2*) In a remote switching terminal (RST) of less than 400 equipped lines, a single nonredundant ringing source failure shall not cause the complete loss of ringing capability to more than 25 percent of the total equipped lines.

(iii) *Power converter*. (A) Power converters required for the purpose of providing various operating voltages to printed circuit boards or similar equipment employing electronic components shall be provided in duplicate with each unit capable of immediately assuming the full operating load upon failure of a unit.

(B) An exception to the duplicate power converter requirement permits nonduplicated power converter(s) to be utilized where there is full compliance with the following criteria.

(*1*) The failure of any single nonduplicated power converter shall not reduce the grade of service of common control and service circuits to any individual line or trunk by more than 50 percent.

(*2*) The failure of any single nonduplicated power converter shall not reduce the traffic carrying capacity of any trunk group or service links to a host office by more than 50 percent.

(*3*) In a remote switching terminal (RST) of 400 or more equipped lines, any single nonduplicated power converter failure shall not cause a complete loss of service to more than 100 equipped lines.

(*4*) In a remote switching terminal (RST) of less than 400 equipped lines, any single nonduplicated power converter failure shall not cause a complete loss of service to more than 25 percent of the total equipped lines.

(7) *Alarm.* Sufficient system alarm points shall be provided from the RST to report conditions to the host alarm system.

(x) *Responsibilities of the bidder*—(1) *Central office layout.* (i) The successful bidder shall furnish tentative floor plan layout drawings showing the arrangement of the equipment and the dimensions of major equipment units. These drawings shall include minimum door dimensions and ceiling heights required for installation, maintenance and ventilation. If requested by the owner, the floor plan shall be such that the battery, charger, power board, main distributing frame and wire chief's test equipment are isolated from the other equipment by a partition.

(ii) The layout drawings shall also show provision for the ultimate capacity of the central office as specified by the owner.

(iii) After approval by the owner of the tentative floor plan, and within 10 calendar days after approval of the contract by the Administrator, the owner shall furnish the bidder the necessary data on the actual floor plan. Within 20 calendar days after receiving the necessary building data, the bidder shall then supply floor plan drawings showing exact locations of all equipment, both initial and ultimate, including points where connection to commercial power are required, with voltage and wattage indicated at each point. Within 20 calendar days after receiving the floor plan drawings from the bidder, the owner shall approve these drawings or take the necessary steps to have the drawings changed to meet his approval. The layout planning must be so coordinated between the owner and the bidder as not to delay the scheduled equipment installation date.

(2) *Shipment of main distributing frame (MDF).* The bidder shall ship the MDF equipment, with all necessary instructions to permit its installation by the owner, at the time requested by the owner in writing, provided such time is not earlier than 90 days prior to the date specified for the shipment of the rest of the central office equipment. If the owner or the owner's agent installs the main distributing frame, the owner shall assume the responsibility and the expense of proper installation according to information furnished by the bidder.

(3) *Drawings and printed material.* (i) The bidder shall supply instructional material for each exchange involved at the time of delivery of the equipment. It is not the intent of this section to require system documentation necessary for the repair of individual circuit boards. The bidder shall supply three complete sets of legible drawings, each set to include all of the following drawings and documentation:

(A) A floor plan showing exact dimensions and location of each equipment frame or item to a convenient scale;

(B) A block schematic drawing showing the various equipment components in the system, and their identifying circuit number (e.g., MDF, line circuits, memory, trunks, etc.);

(C) Drawings of major equipment items such as frames, with the location of major component items of equipment shown;

(D) Individual functional drawings for electrical circuits in the system;

(E) A detailed description of the operation of each circuit down to a circuit package level;

(F) Wiring diagrams indicating the specific method of wiring used on each item of equipment and interconnection wiring between items of equipment;

(G) Sufficient software documentation to maintain and service the system, including drawings showing principal aspects of the software architecture;

(H) Individual maintenance drawings covering each equipment item that contains replaceable parts, appropriately identifying each part by name and part number, or, complete ordering instructions for all replaceable parts if individual item drawings are not provided; and

(I) Job drawings including all drawings that are individual to the particular office involved, such as main frame, power panel, test board, etc.

(ii) The following information shall also be furnished:

(A) Complete index of the required drawings;

(B) Explanation of electrical principles of operation of the overall switching system;

(C) List of tests which can be performed with each piece of test equipment furnished, and explanation of the method of performing each test;

(D) Sample of each form recommended for use in keeping records of tests;

(E) Criteria for analyzing results of tests and determining appropriate corrective action;

(F) General notes on the methods of isolating equipment faults to specific printed circuit cards in the equipment;

(G) List of typical troubles which might be encountered, together with general indications as to the probable location of each trouble;

(H) Special office grounding requirements;

(I) A site specific central office ground system acceptance checklist that is consistent with industry practice; and

(J) A site specific layout of the master ground bar (MGB) showing assignment of P, A, N, and I equipment areas.

(4) *Distributing frame wire.* The bidder shall provide sufficient tinned copper conductor distributing frame wire for the initial installation. The insulation of this wire shall be such that it will not support combustion. The insulation shall have good abrasion resistance and cut-through properties, exhibit good solder heat resistance, and be suitable for wire wrap connections or insulation displacement connections.

(5) *Technical assistance service.* A technical assistance service shall be made available to assist the owner and its maintenance personnel on a 24-hour, 7 days a week basis. There is to be assistance available for both hardware and software problems. The necessary interface devices shall be supplied by the bidder.

(6) *Spare parts.* (i) The spare parts bid price shall be based upon the required quantities of spares shown in Item 6.2 of appendix C of this section, and shall be added to the base bid for comparison purposes in awarding the bid. It is the supplier's responsibility to provide all spares required by this section. If the supplier neglects to list certain spare parts in Item 6.2 of appendix C of this section, but they are necessary to comply with this section, they shall be provided by the supplier at no additional cost to the owner.

(A) ''Units'' are defined as user replaceable components used in the central office equipment. ''Spare Parts'' are direct replacements for units. Spare parts are necessary for the maintenance and diagnostic operations where the suspected faulty unit may be removed and a spare part substituted in anticipation that the trouble will be cleared.

(B) Examples of units for which spare parts should be furnished are printed circuit cards; circuit pack assemblies; fuses; and power supplies.

(C) Spare parts are not required as part of this addendum for items such as connectorized cables, nuts, bolts, and similar hardware; nor for items which can be obtained from sources other than the bidder such as battery cells, chargers, powerboards, magnetic tape transport assemblies, disk drives, ringing machines, recorded announcement machines, loop extenders and voice frequency repeaters, fire bars, teletypewriters, and video monitors.

(D) When 100 or more like units are used in the hosts and RST's to be bid, the quantity of spares to be furnished is determined by multiplying the total number of like units in the contract by .05 or .03, as applicable, and rounding off to the next lowest integer. For example, 119 Class 1 units require five spares; 120 require six.

(E) When alternates are required, the price of the spare parts for the alternates shall be included with the price of the alternate.

(F) For equipment in which the line cards consist of a number of plug-in ''daughter'' boards on a ''mother'' board, the line card is defined as the ''daughter'' board unit. In a similar manner for those designs which have line cards backed up by a ''control card,'' the ''control card'' is not, by definition, a line card.

(G) The quantities of spare parts determined in paragraph (x)(6)(vi) of this section are a minimum quantity. The bidder may add quantities of spare parts to bring the number of spare parts up to the bidder's list of spare parts necessary for proper operation in the field.

(ii) A Class 1 unit does not have automatic transfer to a redundant or standby pool of identical units, and provides any function for 24 or more lines or trunks or for all trunks in a group. Nonredundant digital trunk interfaces are included in this category.

(iii) A Class 2 unit has automatic transfer to a redundant or standby pool of identical units, and provides any function for 24 or more lines or trunks or for all trunks in a group. Redundant digital trunk interfaces and units of a redundant stored program processor are included in this category.

(iv) A Class 3 unit does not have automatic transfer to a redundant or standby pool of identical units and provides any function for no more than 23 lines or trunks or for less than all trunks in a group. Nonredundant analog trunks are included in this category. Excluded from this category are line cards, which are in Class 4.

(v) A Class 4 unit has automatic transfer to a redundant or standby pool of identical units and provides any function for no more than 23 lines or trunks or for less than all trunks in a group. Also, any line cards are in Class 4.

(vi) The spare parts for all of the hosts and the RST's included in this contract shall be provided as follows:

Quantity of Units used in the CO's & RST's To Be Bid	Required Quantity of Spares By Class of Unit			
Class ——>	1	2	3	4
1 through 9	1	1	0	0
10 through 24	2	2	1	0
25 through 49	3	2	2	0
50 through 99	4	3	2	0
100 or More	5%	3%	3%	0

(vii) As a part of the response to the bid, the supplier shall furnish a list of units used by class and a list of spare parts to be furnished with this contract. This list shall be placed in Item 6.2 of appendix C of this section for only one of the host specifications included in the entire contract.

(7) *Environmental requirements.* The bidder shall specify the environmental conditions necessary for safe storage and satisfactory operation of the equipment being bid. If requested, the bidder shall assist the owner in planning how to provide the necessary environment for the equipment.

(8) *Unit costs for cost separation purposes.* The successful bidder shall present a cost breakdown of the central office equipment on a discrete element basis 90 days after installation completion. This shall include the various frames, switching and transmission components, and software.

(9) *Single-point grounding system acceptance.* Qualified representatives of the central office system supplier and the owner are to conduct a thorough joint acceptance audit of the grounding system prior to the central office being placed into service. A grounding system acceptance checklist provided by RUS, which is consistent with standard industry practice, will be used in conducting this audit. All required grounding system corrections are to be made prior to placing the central office system into full service operation. The successful completion of this grounding system audit will constitute an acceptance on the part of both parties, the owner and the central office supplier (refer to paragraph (y)(5) of this

section, and appendix D of this section).

(y) *Installation*. The following responsibilities apply to the central office equipment installation and Remote Switching Terminal (RST) installations, unless otherwise noted.

(1) *Responsibilities of owner*. The owner shall:

(i) Allow the bidder and its employees free access to the premises and facilities at all hours during the progress of the installation;

(ii) Take such action as necessary to ensure that the premises are dry and free from dust and in such condition as not to be hazardous to the installation personnel or the material to be installed (not required for an RST installed in a self-contained environmentally controlled cabinet);

(iii) Provide heat or air conditioning when required and general illumination in rooms in which work is to be performed or materials stored (not required for an RST installed in a self-contained environmentally controlled cabinet);

(iv) Provide suitable openings in buildings to allow material to be placed in position (not required for an RST installed in a self-contained environmentally controlled cabinet);

(v) Provide the necessary conduit and commercial and dc-ac inverter output power to the locations shown on the approved floor plan drawings; provide 120 volts, 60 Hz commercial power equipped with a secondary arrester and a reasonable number of outlets for test, maintenance and installation equipment; provide suitable openings or channels and ducts for cables and conductors, from floor to floor and from room to room; provide an acceptable central office grounding system and at a ground resistance level that is reasonable for office site conditions (not required for an RST installed in a self-contained environmentally controlled cabinet);

(vi) Provide the necessary wiring, central office grade ground and commercial power service, with a secondary arrester, to the location of an exterior RST installation based on the voltage and load requirements furnished by the bidder;

(vii) Test at the owner's own expense all lines and trunks for continuity, leakage and loop resistance and ensure that all lines and trunks are suitable for operation with the central office equipment specified;

(viii) Make alterations and repairs to buildings necessary for proper installation of material, except to repair damage for which the bidder or its employees are responsible;

(ix) Connect outside cable pairs on the distributing frame and run all line and trunk jumpers (those connected to protectors);

(x) Furnish all trunk, line, and party assignment information to permit the bidder to program the data base memory within a reasonable time prior to final testing;

(xi) Release for the bidder's use such portions of the existing plant as are necessary for the proper completion of such tests as require coordination with existing facilities including facilities for T1 span lines with properly installed repeaters between the central office and the RST installations;

(xii) Make prompt inspections as it deems necessary when notified by the bidder that the equipment, or any part of the equipment, is ready for acceptance;

(xiii) Provide and install adequate fire protection apparatus, including one or more fire extinguishers or fire extinguishing systems of the gaseous type that has low toxicity and effect on equipment; and

(xiv) Provide necessary access ports for cable, if underfloor cable is selected.

(2) *Responsibilities of bidder*. The bidder shall:

(i) Allow the owner and its representatives access to all parts of the buildings at all times during the installation;

(ii) Obtain the owner's permission before cutting into or through any part of the building structure such as girders, beams, concrete or tile floors, partitions or ceilings (not applicable to the installation of lag screws, expansion bolts, and similar devices used for fastening equipment to floors, columns, walls and ceilings);

(iii) Be responsible for reporting to the owner any damage to the building

which may exist or may occur during its occupancy of the building, repairing all damage to the building due to carelessness of the bidder's workforce, and exercising reasonable care to avoid any damage to the owner's property;

(iv) Consult with the owner before cutting into or through any part of the building structure where the fireproofing or moisture proofing may be impaired;

(v) Take necessary steps to ensure that all fire fighting apparatus is accessible at all times and all flammable materials are kept in suitable places outside the building;

(vi) Not use gasoline, benzene, alcohol, naphtha, carbon tetrachloride or turpentine for cleaning any part of the equipment;

(vii) Install the equipment in accordance with the specifications for the office;

(viii) Run all jumpers, except line and trunk jumpers (those connected to protectors);

(ix) Establish and update all data base memories with subscriber and trunk information as supplied by the owner until an agreed turnover time;

(x) Give the owner notice of completion of the installation at least 1 week prior to completion;

(xi) Permit the owner or its representative to conduct tests and inspections after installation has been completed in order that the owner may be assured that the requirements for installation are met;

(xii) Allow access, before turnover, by the owner or its representative, upon request, to the test equipment which is to be turned over as a part of the office equipment, to permit the checking of the circuit features which are being tested and to permit the checking of the amount of connected equipment to which the test circuits have access;

(xiii) Make final charger adjustments using the manufacturer's recommended procedure;

(xiv) Notify the owner promptly of the completion of work of the central office, or such portions as are ready for inspection;

(xv) Correct promptly all defects for which the bidder is responsible;

(xvi) Provide the owner with one set of marked prints, or strapping prints, showing which of the various options and figures are in use on each switching system as specified in paragraph (x)(3)(i) of this section;

(xvii) Place the battery in service in compliance with the recommendations of the battery manufacturer; and

(xviii) Furnish the owner with a record of the cell voltages and specific gravity readings made at the completion of the installation of the switching system and before it is placed in commercial service.

(3) *Installation requirements.* (i) All work shall be done in a neat, workmanlike manner. Equipment frames or cabinets shall be correctly located, carefully aligned, anchored and firmly braced. Cables shall be carefully laid with sufficient radius of curvature and protected at corners and bends to ensure against damage from handling or vibration. Exterior cabinet installations for RST's shall be made in a permanent, eye-pleasing manner.

(ii) All multiple and associated wiring shall be continuous, free from crosses, reverses and grounds and shall be correctly wired at all points.

(iii) An inspection shall be made by the owner or its representatives prior to performing operational and performance tests on the equipment. However, this inspection shall be made after all installing operations which might disturb apparatus adjustments have been completed. The inspection shall be of such character and extent as to disclose with reasonable certainty any unsatisfactory condition of apparatus or equipment. During these inspections, or inspections for apparatus adjustments, or soldering, or in testing of equipment, a sufficiently detailed examination shall be made throughout the portion of the equipment within which such condition is observed, or is likely to occur, to disclose the full extent of its existence, where any of the following conditions are observed:

(A) Apparatus or equipment units failing to compare in quantity and code with that specified for the installation;

(B) Apparatus or equipment units damaged or incomplete;

(C) Apparatus or equipment affected by rust, corrosion or marred finish; or

(D) Other adverse conditions resulting from failure to meet generally accepted standards of good workmanship.

(4) *Operational test requirements.* (i) Operational tests shall be performed on all circuits and circuit components to ensure their proper functioning in accordance with appropriate applicable documents supplied by the bidder.

(ii) A sufficient quantity of overall tests shall be made to ensure proper operation of all specified features.

(iii) A sufficient quantity of locally originating and incoming calls shall be made to prove the switching system can accept and process calls to completion.

(5) *Grounding system audit.* (i) A grounding system audit shall be performed to ensure that a viable single-point grounding system is in place prior to the time the switching system is placed into full service operation. It is suggested that such an audit be conducted at the time the switching system is ready for turnover to the owner.

(ii) This single-point grounding system audit is to be conducted by authorized representatives of the supplier and owner, and with the RUS general field representative participating at his discretion.

(iii) The single-point grounding system audit is to be conducted using the checklist contained in appendix D of this section.

(iv) Appendix D of this section shall be the principal single-point grounding system audit guideline document. A supplemental checklist may be prepared and provided by the switching system supplier which recognizes unique grounding requirements related to their particular switching system. The scope of this supplier checklist is to be confined to unique and specific switching system requirements only. Acceptable supplier supplemental grounding checklist must have prior approval of and be on file with the Central Office Equipment Branch of the Telecommunications Standards Division of RUS.

(v) It is the responsibility of the central office supplier to ensure that the grounding system evaluation criteria contained in the combination of the appendix D checklist of this section and their optional supplemental checklist adequately fulfill requirements for warranty coverage.

(vi) All deficiencies in the single-point grounding system are to be corrected prior to the switching system being placed into full service operation. Exceptions are permitted only by mutual agreement of the owner and supplier and with written approval of the RUS general field representative.

(vii) The acceptance statement facesheet of the audit checklist in appendix D of this section shall be signed by authorized representatives of the supplier and owner to indicate mutual approval of the single-point grounding system. Copies of all completed grounding system audit documents are to be provided to the supplier, owner and appropriate RUS telephone program regional offices.

(The information and recordkeeping requirements of this section have been approved by the Office of Management and Budget (OMB) under the control number 0572–0059)

APPENDIX A TO §1755.522—SPECIFICATION FOR DIGITAL, STORED PROGRAM CONTROLLED CENTRAL OFFICE EQUIPMENT DETAILED REQUIREMENTS (HOST)

(INFORMATION TO BE SUPPLIED BY OWNER)

Telephone Company Name _____

_____

Location

_____

Central Office Name (By Location)

Town _____

County _____

State _____

_____ Attended

_____ Unattended

_____ Remotes

1. General

1.1 Notwithstanding the bidder's equipment lists, the equipment and materials furnished by the bidder must meet the requirements of paragraphs (a) through (x), Appendix A and Appendix B of §1755.522.

1.2 Paragraphs (a) through (x) of §1755.522 cover the minimum general requirements for digital, stored program controlled central office switching equipment.

1.3 Paragraph (y) of §1755.522 covers requirements for installation, inspection, and testing when such service is included as part of the contract.

1.4 Appendices A and B of §1755.522 cover the technical data for application engineering and detailed equipment requirements insofar as they can be established by the owner. These appendices are to be filled in by the owner.

1.5 Appendix C of §1755.522 covers detailed information on the switching network equipment and the common control equipment, and information as to system reliability and heavy traffic delays as proposed by the bidder. This appendix is to be filled in by the bidder and must be presented with the bid.

1.6 Appendix D of §1755.522 is the single-point grounding system audit checklist.

2. Numbering Scheme

2.1 This office shall be arranged to serve the following area and office code(s):

_____

_____

_____

_____

If more than one code is to be served, discrimination shall be determined by the following:

Number Translation ____
Separate Trunk Groups ____
Both (Explain in Item 16, Appendix A) ____

2.2 This office shall be arranged to provide EAS service to the following:

Connecting office	Code	Connecting office	Code

2.2.1 Seven digits shall be dialed for all local and EAS calls.

2.3 Additional dialing procedures to be provided include the following:

Feature	Required
Station Paid Toll (Including Coin):	
Home Numbering Plan Area (HNPA):	
"1" + 7 Digits	_____
"1" + 10 Digits	_____
Other (Explain in Item 16, Appendix A)	_____
Foreign Numbering Plan Area (FNPA):	
"1" + 10 Digits	_____
Other (Explain in Item 16, Appendix A)	_____

10XXX Dialing to Interexchange Carriers:

Name	Access code

Feature	Required
Person, Special (Including Coin): HNPA—"0" + 7 Digits.	
"0" + 10 Digits.	
FNPA "0" + 10 Digits.	
Other (Explain in Item 16, Appendix A).	
Directory Assistance: HNPA Local—411.	
"1" + 411.	
HNPA Toll "1" + 555–1212.	
FNPA Toll "1" + NPA + 555–1212.	
IDDD: Operator Serviced 01.	
Station-Station 011.	

Other service codes	No. to be dialed
Wire Chief.	
Repair Service.	
Business Office.	
Emergency Calls to 911 Lines.	
Emergency Calls to 911 Trunks.	
Time.	
Weather.	
100 Test Line.	
102 Test Line.	
105 Test Line.	
Other (Explain in Item 16, Appendix A).	

2.4 Assistance calls are answered: (Check appropriate items)

2.4.1 At the operator office in _____

2.4.1.1 By means of the regular interoffice toll trunks _____

2.4.1.2 By means of the regular interoffice EAS trunks _____

2.4.1.3 By means of a separate special service trunk group _____

2.4.1.4 Locally _____

Explain:

3. Office Clock

3.1 This office is to be slave clock synchronized with another office:

_____ Yes _____ No

(Explain details in Appendix A, Item 16 if ''Yes''.)

3.2 This office is to be a master clock office to provide synchronization timing for other offices:

_____ Yes _____ No

(Explain details in Appendix A, Item 16 if ''Yes''.)

4. Interoffice Trunking Diagram

4.1 A sketch showing relative location of exchanges, RST's, and number of circuits shall be included, also the office and area codes of the direct trunk points. The diagram should indicate whether toll or EAS trunk groups are ''High Usage'' or ''Final.'' Alternate routes should be included. Indicate whether the trunk termination is direct digital or analog.

5. Translator Function Chart

Called point	Subscriber dials	First route			Alternate routes		
		Translator action	Send		Translator action	Send	
		Deletes	Prefixes		Deletes	Prefixes	

6. Line Circuit Requirements (Includes all lines associated with RST's.)

6.1 *Types of Lines*

	No. of lines		No. of EAS areas	Total No. of lines required
	Local service only	both local and EAS service		
6.1.1 Individual—Flat Rate	_____	_____	_____	_____
6.1.2 Individual—Message Rate	_____	_____	_____	_____
6.1.3 Pay Station	_____	_____	_____	_____
6.1.4 Telephone Company Official Lines	_____	_____	_____	_____
6.1.5 Wire Chief	_____	_____	_____	_____
6.1.6 911 Emergency Service Bureau Lines.	_____	_____	_____	_____
6.1.7 Number Hunting PBX Groups:	_____	_____	_____	_____

No. of lines in group	No. of groups	Direct in dial*	Restricted service at COE	Type		No. of lines		No. of EAS areas	Total No. of lines required
				Ground start	Loop start	Local service only	Both local and EAS service		
_____	_____	_____	_____	_____	_____	_____	_____	_____	_____
_____	_____	_____	_____	_____	_____	_____	_____	_____	_____
_____	_____	_____	_____	_____	_____	_____	_____	_____	_____
_____	_____	_____	_____	_____	_____	_____	_____	_____	_____
_____	_____	_____	_____	_____	_____	_____	_____	_____	_____

*Furnish translation information under Item 5.

6.1.8 WATS Lines (Give details in Appendix A, Item 16)

Number of Inward WATS Lines _____

Number of Outward WATS Lines _____

6.1.9 Special Lines Required _____ (Explain in Item 16, Appendix A)

6.1.10 Total Number of Lines Required

Host _____ (Incl. DDI Concentrator Lines)

RST 1 _____

RST 2 _____

RST 3 _____

Total _____

6.1.11 Total Director Numbers Required _____

(Including RST's) (see Item 7.1, Appendix A)

6.1.12 Pay Station

Type _____

New ____ Reused ____

(Describe in Item 16, Appendix A)

6.1.13 Line Concentrator

6.1.13.1 Supplied by Owner (see Item 16, Appendix A, for details)

____ Yes ____ No

6.1.13.2 Supplied by Bidder (If ''Yes'', attach REA Form 397g, Performance Specification for Line Concentrators)

____ Yes ____ No

6.2. *Data on Lines Required Range Extension*

6.2.1 Number of non-pay station lines having a loop resistance, including the telephone set, as follows:

	No. of lines
1901–3200 ohms	_____
3201–3600 ohms	_____

6.2.2 Number of pay station lines having loop resistance, excluding the telephone set, greater than:

	No. of lines
1200 ohms (For Prepay)	_____
1000 ohms (For Semi-Postpay Operation).	_____

6.2.3 Range extension equipment is to be provided:

6.2.3.1 Loop Extenders: Total Quantity _____

By Bidder—Quantity _____

By Owner—Quantity _____

(Explain in Item 16, Appendix A)

6.2.3.2 VF Repeaters: Total Quantity _____

By Bidder—Quantity _____

(Bidder must have information on loading and cable size.)

By Owner—Quantity _____

(Explain in Item 16, Appendix A)

6.2.3.3 Range extension may be furnished as an extended range line circuit at the option of the supplier. If this option is used, the quantities of loop extenders and VF repeaters will be different from the quantities listed above (see Item 6.1,a, Appendix C).

____ Yes ____ No

7. Traffic Data-Line Originating and Terminating Traffic

7.1 Originating Line Traffic—Estimated per Busy Hour (Includes all Lines Associated With RST's):

	(a) CCS per Main Station	(b) No. of Main Stations	(axb) Total CCS	No. of Lines Required [1]
Ind.—Res	_____	_____	_____	_____
Ind.—Bus	_____	_____	_____	_____
Special Lines	_____	_____	_____	_____
Pay Station	_____	_____	_____	_____
Telco Official	_____	_____	_____	_____
Wire Chief	_____	_____	_____	_____
No. Htg. or PBX	_____(2)	_____(3)	_____	_____
WATS	_____	_____	_____	_____
Data Service	_____	_____	_____	_____
911 Emerg. Service	_____	_____	_____	_____
Total		_____	_____	_____(4)
		(c)	(d)	(e)

[1] See Appendix A, Item 6.1.
[2] This figure is the CCS per PBX trunk.
[3] This figure is the number of PBX trunks.
[4] This is the total number of line equipments required. The number to be provided will be determined by the equipment design of the system of the selected bidder. See Appendix C, Item 3.1.1.2.

7.2 Average Originating CCS per Line per Busy Hour

(d)/(e)=____/ ____=____ CCS/Line

This office shall be engineered to handle an initial average originating busy hour traffic of ____ CCS per line. It is anticipated that the average originating busy hour traffic will increase to ____ CCS per line.

Originating Traffic Attributed to Host Only ____ CCS/Line

7.3 Terminating Traffic—Estimated CCS per Busy Hour

It is assumed that the total CCS for terminating traffic is the same as for originating traffic. Since digital switch networks are on a terminal per line basis, the terminating CCS per line will be the same as the originating CCS per line as shown in Item 7.2, Appendix A.

Terminating Traffic Attributed to Host Only ____ CCS/Line

7.4 Percent of Pushbutton Lines ____

7.5 Anticipated Ultimate Capacity (20 years)

7.5.1 Subscriber Lines

Host _____ (Incl. DDI Concentrator Lines)

RST 1 _____

RST 2 _____

RST 3 _____

Total _____

8. Trunk Circuit Requirements

8.1 *Interoffice Trunking*

8.1.1 Trunking Requirements

1. Connecting Office				
2. Use of Trunk				
3. Trk. Grp. Ntwk. Connection [1]				
4. Quantity Equipped				
5. Ultimate % Growth				
6. CCS Capacity				
7. Direction				
8. No. Digits Dialed				
9. No. Digits Outpulsed				
10. No. Digits Inpulsed				
11. Type Signaling				
12. Type Pulsing				
13. Carrier Type (2-Wire)				
14. Carrier Type (4-Wire)				
15. Physical				
16. Repeat Coils [2]				
17. DX Signaling Set				
18. Other Type Signaling				
19. Delay Dial				
20. Direct Digital Interface				
21. a. Feature Group B				
b. Feature Group C				
c. Feature Group D				

[1] Designation of trunk group network connection involves the following categories:
IC—Direct Inter-LATA Connecting Trunk=(IC/POP)
TC—Tandem Connecting Trunks
IT—Intertandem Connecting Trunks
IL—Intra-LATA Connecting Trunks
TIC—Tandem Inter-LATA Connecting Trunks
Misc.—Intercept, Busy Verification, etc.
[2] Omit repeating coils for carrier derived trunks.

8.1.2 Pads for 4-Wire Carrier (7dB and 16dB)

Total Quantity _____
By Bidder Quantity _____
By Owner Quantity _____

Refer to the attached information regarding connecting company trunk circuit drawing numbers and name of manufacturer.

8.2 *Switched Traffic Data*

8.2.1 Originating Traffic

Type	CCS	H.T. secs.	BHC	No. of digits out-pulsed	Sender sig. mode	Remarks
Toll "0" − [1]						
Toll "0"+7 [1,2]						
Toll "0"+10 [1,2]						
Toll S-S "1"+7 [2]						
Toll S-S "1"+10 [2]						
Toll Other						
Special Service						
Intercept						
Intraoffice				XXXXXXX	XXXXXXX	
EAS						
EAS						
EAS						
Tandem						
Tandem						
Tandem						
911 Emerg. Service						
Total						

[1] PPCS traffic assumed to be divided 20 percent "0" − and 80 percent "0"+ if unknown.
[2] Toll calls assumed to be divided two-thirds 7 digits and one-third 10 digits.

Busy Hour Attempts=BHC Total × 1.4=____

8.2.2 Terminating Traffic

Type	CCS	H.T. secs.	BHC	No. of digits inpulsed	Receiver sig. mode	Remarks
Toll Compl.						
Test & Ver.						
Intraoffice						
EAS						
EAS						
EAS						
Tandem						
Tandem						
Tandem						
Total						

9. Checklist of Features Required

9.1 *Alternate Routing* ....
(Explain in Item 16, Appendix A)

9.2 *Data Service* ....
(Explain in Item 16, Appendix A)

9.3 This office shall be:

9.3.1 End Office Only ....

9.3.2 End Office and Intermediate Tandem ....
(Explain in Item 16, Appendix A)

9.3.3 End Office and Access Tandem ... .
(Explain in Item 16, Appendix A)

9.4 Billing Data

	Trunk group	Send ANI feature group			Store billing data	
		B	C	D	AMA system	Pollable system
9.4.1 This office only						
9.4.2 Trunks from Tributaries						
9.4.3 Local Message Detail Recording:						

9.5 *Pollable Systems*

9.5.1 Polling device to be provided on this contract

____ Required
____ Not Required

(Provide details in Item 16, Appendix A)

9.5.2 Pollable system to be backed up by tape or disc standby

____ Required
____ Not Required

9.6 *AMA Format*

9.6.1 Bellcore Format

____ Required
____ Not Required
(Provide details in Item 16, Appendix A)

10. Miscellaneous Operating Features

10.1 *Busy Verification*

10.1.1 By dedicated trunk from toll operator: ____

10.1.1.1 One-Way, Inward ____

10.1.1.2 Two-Way (Busy verification inward, intercept outward) ____

10.1.2 By prefix digit over intertoll trunk ____

(Indicate digit(s) dialed) ____

10.1.3 Access by Switchman

10.1.3.1 Dedicated Trunk ____

10.1.3.2 Multiple of Operator Trunk ____

10.2 *Intercept Facilities*

10.2.1 Vacant code, disconnected number, and unassigned number intercept shall be: (Check One)

By recorded announcement:
Without cut-through to operator ____
With cut-through to operator ____
By operator ____

10.2.2 Changed number intercept shall be: (Check One)

By recorded announcement:
Without cut-through to operator ____
With cut-through to operator ____
By operator ____
By automatic intercept system (AIS) in distant office ____

10.2.3 Method of Reaching Operator, if required:

Separate trunk group ____
Regular interoffice toll trunks with idle trunk selecting over at least three trunks when three or more toll trunks are equipped ____

10.2.4 Number of separate intercept trunk circuits ____

10.3 *Line Load Control*

10.3.1 Line load control facilities are:

____ Required ____ Not Required
(Explain in Item 16, Appendix A)

10.4 *Service Observing Facilities*

10.4.1 Service observing facilities are:
____ Required ____ Not Required
(Explain in Item 16, Appendix A)
10.5 *Hotel-Motel Arrangements*
10.5.1 Hotel-motel arrangements for operation of message registers at the subscriber's premises are:
____ Required ____ Not Required
(Explain in Item 16, Appendix A)
10.5.1.1 How are message registers to be activated?

Line Reversal ____
Third Wire ____
Other ____
(Explain in Item 16, Appendix A)
10.6 *Nailed-Up Connections*
____ Required ____ Not Required
(Explain in Item 16, Appendix A)
10.7 *Vertical Services:* (RST Lines are Included)

	Initially	*Ultimate*
10.7.1 Call Waiting—No. of Lines	_____	_____
10.7.2 Call Forwarding—No. of Lines	_____	_____
____ Local ____ Remote		
(Explain in Item 16, Appendix A).		
10.7.3 Abbreviated Dialing No. of Lines	_____	_____
No. of Codes per Line ____ for ____ Lines		
No. of Codes per Line ____ for ____ Lines		
10.7.4 Three-Way Calling—No. of Lines	_____	_____
CCS Per Line	_____	_____

10.7.5 Other ____
(Explain in Item 16, Appendix A)

11. Maintenance Facility Requirements

11.1 *Alarm Signals*
11.1.1 Handled locally ____
Explain in Detail: _____
_____
_____
11.1.2 Transmitted to attended point
11.1.2.1 Via operator office trunks ____
11.1.2.2 Via printout or other display service ____
Explain in Detail: _____
_____
_____
11.1.2.3 Type of tone to operator
11.1.2.3.1 Distinctive tone (see (i)(2)(ix) of § 1755.522) ____
11.1.2.3.2 Other
Explain in Detail: _____
_____
_____
11.1.3 Alarm checking signals for carrier and mobile radio systems

11.1.3.1 Minor Alarm ....
11.1.3.2 Major Alarm ....
11.1.3.3 Terminals for both ....
11.2 *Trouble Location and Test*
11.2.1 Outside plant and stations (check desired items)
11.2.1.1 Subscriber's loop test circuit:
11.2.1.1.1 As part of the maintenance center ....
11.2.1.1.2 Separately ....
11.2.1.2 Remote test set (Explain in Item 16, Appendix A) ....
11.2.1.3 Dial speed test circuit (Explain in Item 16, Appendix A) ....
11.2.1.4 Pushbutton dialing test circuit ....
11.2.1.5 Howler (per (o)(2)(iii)(C) of § 1755.522) ....
11.2.1.6 Hand test sets, number required ____ (Explain in Item 16, Appendix A).

11.3 *Transmission Tests*
11.3.1 Furnish reference tone
Yes ____
No ____

Frequencies and order in which applied	Time interval for application of each frequency
____ Hz	____ Seconds
____ Hz	____ Seconds
____ Hz	____ Seconds
____ Hz	____ Seconds

11.3.2 Test Lines
11.3.2.1 Test Line 100 ____
11.3.2.2 Test Line 102 ____
11.3.2.3 Test Line 104 ____
11.3.2.4 Test Line 105 ____
(Explain in Item 16, Appendix A)
11.3.2.5 Test Line 107 ____
11.3.2.6 Remote Office Test Line ____
(Explain in Item 16, Appendix A)
11.4 *Line Testing*
11.4.1 Automatic line insulation testing
Yes ____
No ____
11.4.2 Owner supplied equipment
Yes ____
No ____
11.4.2.1 Vendor supplied interface only
Yes ____
No ____
If supplied by owner, explain in Item 16, Appendix A, including manufacturer, model, location.
11.5 *Remote Control*

11.5.1 Remote control of the system shall be provided.

Yes ____
No ____

If required, explain in Item 16, Appendix A, including number, type and location.

12. Power Equipment Requirements (Host Office Only)

12.1 *Central Office Battery*

12.1.1 A battery reserve of ____ busy hours shall be provided for this office when it reaches ____ lines at the ultimate anticipated traffic rates specified in Item 7.2, Appendix A.

12.1.1.1 The owner will furnish a standby generator, permanently installed in this office, with capacity sufficient to power air conditioning equipment required for cooling of the central office equipment and to maintain an adequate dc supply in the event of a failure of the commercial ac supply.

Yes ____
No ____

12.1.2 *Type of battery:* (Check One)
Lead Calcium ____
Lead Antimony ____

12.1.3 Voltmeter (portable 3–60–150 volt scale, 1% accuracy) shall be furnished.

Yes ____
No ____

12.1.4 Hydrometer in a hydrometer holder with glass or plastic drop cup shall be furnished.

Yes ____
No ____2112.1.5 Type of battery rack required: (Check One)

Two Tier ____
Other ____
Explain:

12.1.6 Special equipment power requirements (carrier, voice frequency repeaters, etc.). Drain in amperes ____

12.1.6.1 Supply all necessary equipment to provide the following 48-volt battery taps:

Number of circuits	Fuse (or circuit breaker) size
.....	
.....	
.....	
.....	

12.2 *Charging Equipment*

12.2.1 Charging equipment shall be provided capable of charging the office battery on a full float basis when the office reaches ____ lines at the ultimate anticipated traffic rates specified in Item 7.2, Appendix A.

12.2.2 Charger input rating shall be:

	3-Phase Connection:
Voltage ____ Phase ____	3–Wire ____ 4–Wire ____

	3-Phase Connection:
Frequency ____	Delta ____
.....	Y ____

12.3 *Ringing Equipment*

12.3.1 Solid-state ringing equipment in accordance with paragraph (s)(5)(i) of §1755.522 shall be provided for generating the frequencies specified by check marks in the following table. Ringing generator sets serving the entire office shall each be sized to carry the full office ringing load when the office size reaches ____ lines at the ultimate anticipated traffic rates specified in Item 7.2, Appendix A.

12.3.2 Ringing frequencies to be supplied:

	Frequency in Hz		Maximum No. of telephones
Single Frequency	20	.....	.....
Decimonic	20	.....	.....
	30	.....	.....
	40	.....	.....
	50	.....	.....
Harmonic	16⅔	.....	.....
	25	.....	.....
	33⅓	.....	.....
	50	.....	.....
Synchromonic	20	.....	.....
	30	.....	.....
	42	.....	.....
	54	.....	.....

12.3.3 Furnish frequency meter (accurate within 1.3 Hz) and voltmeter (5% accuracy) for ringing measurements (see paragraph (s)(7)(ii) of §1755.522). Check One:

Panel Mounted ____
Portable ____
Not Required ____

12.4 *Power Board*

The power panel and associated wiring shall be of ample size to meet the load requirements when this office reaches ____ lines at the ultimate anticipated traffic rates specified in Item 7.2, Appendix A.

13. Distributing Frame Requirements (Host Office Only)

13.1 Total number of outside plant cable pairs to be terminated ....
13.1.1 Gauge of outside plant cable pairs ....
13.2 Number of outside plant cable pairs to be protected ....
13.3 Number of additional protector pair units to be provided on MDF ....

Explain:

13.4 *Main Frame Details*

Is present MDF to be reused?

Yes ____
No ____

If ''Yes,'' Type ____

Reused protectors are:

____ (Mfgr.)
____ (Type)
13.4.1 Number of pairs of arrester units (switching equipment) ____
13.4.2 Number of pairs of gas tube arrester units (special equipment) ____
13.4.2.1 Gas tubes to be:
____ light,
____ medium,
____ heavy,
____ max. duty units
13.4.2.2 Fail shorted/low breakdown failure mode required
Yes ____
No ____
13.4.2.3 Breakdown voltage of gas tube arresters ____
13.4.3 Number of terminated pairs to be grounded ____
13.4.4 Factory assembled tip cable
Yes ____
No ____
13.4.4.1 Tip cable length [if other than 20 feet (610 cm)]
____
13.4.4.2 Tip cable formed
Up ____
Down ____
13.4.5 Pairs per vertical ____
13.4.6 Height of vertical ____feet ____ inches

14. Building and Floor Plan Information (Host Office Only)

14.1 Equipment is to be installed in an existing building (Attach detailed plan.) ____
14.2 A new building is planned ____
14.2.1 Tentative plan (*Note to Engineer:* Show sketch without dimensions.)
14.3 *Detailed Arrangements*
14.3.1 Partition required (to isolate space containing battery, charger, power board, test panel, main distributing frame and subscriber's loop test circuit (wire chief's test desk) from that of the remaining equipment).
Yes ____
No ____
14.3.2 Vestibule required
Yes ____
No ____
14.3.3 Cable entrance
Overhead____
Underground ____
14.3.4 Additional floor space will be required for the following equipment which is being furnished by the owner or by the connecting company:

_____
_____
_____

14.3.5 The office will be arranged for
Overhead Interbay Cabling ____
Underfloor (Computer Room Type) Interbay Cabling ____
14.3.6 Is earthquake bracing required?
Yes ____
No ____
(If ''Yes,'' explain zone and criteria used for zone in Item 16, Appendix A.)
14.3.7 Office ground will be ____ ohms or less (Refer to Item 4.6.3 of RUS TE&CM 810.)
14.3.8 The office is considered to be in the following category for lightning damage probability based on the Figure 1 map of RUS TE&CM 823 (see paragraph (u)(2) of 1755.522).
____Very High
____Higher than Average
____Average
____Lower than Average
____Very Low
14.3.9 The following is additional information regarding operating environment conditions which should be considered in determining system protection requirements (tower in vicinity, high exposure, etc.):

15. Alternate Requests

16. Explanatory Notes (Include a detailed description of any equipment to be reused, or otherwise supplied by the owner, loop extenders, subscriber carrier, VF repeaters, etc.)

APPENDIX B TO 7 CFR 1755.522—DETAILED INFORMATION ON REMOTE SWITCHING TERMINALS (RST'S)

(Complete One Form For Each RST)

1. Number of Subscriber Lines (These lines included in totals in Item 6, Appendix A).

1.1 Single-Party: _____ Flat Rate _____ Message Rate.
1.2 Semi-Postpay Pay Station _____.
1.3 Prepay Pay Station _____.
1.4 PABX Lines _____ Loop Start_____ Ground Start _____ Restricted at Office _____ Other _____ (Describe in Item 12, Appendix B)
1.5 Number of lines to be pushbutton _____
1.6 911 Emergency Lines _____
1.7 Anticipated ultimate capacity (20–Year) _____

2. Traffic

2.1 Originating traffic per line—CCS/BH: _____ Initial _____ Ultimate.
2.2 Terminating traffic per line—CCS/BH: _____ Initial _____ Ultimate
2.2.1 Terminating will be made equal to originating if it is not known to be different.

3. Subscriber Loop Resistance

3.1 Number of subscriber lines having loop resistance, including the telephone set of:
No. of Lines
1501–1900 Ohms _____
1901–3200 Ohms _____

3.2 Number of pay station lines having loop resistance, excluding the telephone set, greater than:

No. of Lines

1200 Ohms (For Prepay) _____

1000 Ohms (For Semi-Post Pay Operation) _____.

4. Range Extension

4.1 If no standby power is available at the site, loop extenders may be required on 1501 to 1900 ohms loops.

4.2 *Loop extenders:* Total Quantity _____ By Bidder—Quantity _____ By Owner—Quantity

(Explain in Item 12, Appendix B)

4.3 *VF repeaters:* Total Quantity _____ By Bidder—Quantity _____ By Owner—Quantity _____.

(Explain in Item 12, Appendix B)

5. Power Supply

5.1 Power Board.

5.1.1 The power board and associated wiring shall be of ample size to meet the load requirements when this RST reaches _____ lines at the ultimate anticipated traffic rates specified in Item 2, Appendix B.

5.2 *Charger input rating shall be:* Voltage _____ Phase _____ Frequency _____

3-Phase Connection:

3-Wire _____

4-Wire _____

Delta _____

Y_____

5.2.1 Charger shall be capable of charging the RST battery on a full float basis when the RST reaches _____ lines at ultimate traffic rate specified in Item 2, Appendix B.

5.2.2 Charger shall be redundant _____.

5.3 Battery reserve shall be _____ busy hours when the RST reaches _____ lines at the ultimate anticipated traffic specified in Item 2, Appendix B.

5.4 Standby power is available. Yes _____ No _____.

5.5 Special equipment power requirements _____ amps.

5.6 *Ringing*.

5.6.1 Type of Ringing.

5.6.2 Frequency

No.	1.	2.	3.	4.
Frequency HZ				
Max. No. Phones/ Frequency				

5.6.3 Wattage to be sized for _____ lines.

5.6.4 Frequency Meter (see Item 12.3.3, Appendix A). Panel Mounted _____ Not Required _____.

6. Emergency Operation

6.1 If path to central office is opened, the RST shall be able to complete calls between subscribers in its own system: Yes _____ No _____

Further requirements should be listed under Item 12, Appendix B.

7. RST Distribution Frame Requirements

7.1 Total number of outside plant cable pairs to be terminated _____.

7.1.1 Gauge of outside plant cable pairs _____.

7.2 Number of outside plant cable pairs to be protected _____.

7.3 Number of additional protector pair units to be provided on MDF _____.

Explain:

7.4 *Main Frame Details*

7.4.1 Present MDF to be reused Yes_____ No_____.

If ''Yes'', Type _____.

Reused protectors are: _____ (Mfr.) _____ (Type).

7.4.2 Number of pairs of arrester units (switching equipment) _____.

7.4.3 Number of pairs of gas tube arrester units (special equipment) _____.

7.4.3.1 Gas tubes to be: _____ light, _____ medium, _____ heavy, _____ maximum duty units.

7.4.3.2 Fail shorted/low breakdown failure mode required Yes _____ No _____.

7.4.3.3 Breakdown voltage of gas tube arresters _____.

7.4.4 Number of terminated pairs to be grounded _____.

7.4.5 Factory assembled tip cable Yes _____ No _____.

7.4.5.1 Tip cable length [if other than 20 feet (610 cm)] _____.

7.4.5.2 Tip cable formed Up _____ Down _____.

7.4.6 Pairs per vertical _____.

7.4.7 Height of vertical _____ feet _____ inches.

8. Building and Floor Plan Information

8.1 RST to be mounted in building _____.

8.1.1 Earthquake bracing required Yes _____ No _____ (see Item 14.3.6, Appendix A).

8.1.2 Supply building floor plan.

8.2 RST to be mounted in cabinet out of doors _____.

8.2.1 Cabinet to be mounted _____ on pole _____ on ground.

9. Subscriber Line Test

9.1 Remote testing of subscriber lines is required Yes _____ No _____.

9.2 Subscriber loop test set _____.

10. Span Lines to Host Central Office

10.1 To be supplied by Owner _____.

10.2 To be supplied by Bidder _____.

10.2.1 When the bidder is to supply the span lines, an RUS Form 397b, Trunk Carrier

Systems, with the applicable parts completed must be attached with a physical layout of the span line.

11. Grounding Considerations

11.1 The RST ground will be _____ ohms or less. (Refer to Item 4.6.3 of RUS TE&CM 810.)

11.2 This RST is considered to be in the following category for lightning damage probability based on the Figure 1 map of RUS TE&CM 823._____ Very High _____ Higher than Average _____ Average _____ Lower than Average _____ Very Low

11.3 The following is additional information regarding operating environment conditions which should be considered in determining system protection requirements (tower in vicinity, high exposure, etc.):

12. Explanatory Notes

APPENDIX C TO 7 CFR 1755.522—SPECIFICATIONS FOR DIGITAL, STORED PROGRAM CONTROLLED CENTRAL OFFICE EQUIPMENT DETAILED REQUIREMENTS—BIDDER SUPPLIED INFORMATION

Telephone Company
Name _____
Location
_____
_____
Central Office Name (By Location)
Town _____
County _____ State _____
_____
Attended _____ Unattended _____

1. General

1.1 The equipment and materials furnished by the bidder must meet the requirements of paragraphs (a) through (x), Appendix A, and Appendix B of §1755.522.

1.2 Paragraphs (a) through (x) of §1755.522 cover the minimum general requirements for digital, stored program controlled central office switching equipment.

1.3 Paragraph (y) of §1755.522 covers requirements for installation, inspection, and testing when such service is included as part of the contract.

1.4 Appendices A and B of §1755.522 cover the technical data for application engineering and detailed equipment requirements insofar as they can be established by the owner. These appendices are to be filled in by the owner.

1.5 Appendix C of §1755.522 covers detailed information on the switching network equipment and the stored program controlled equipment, and information as to system reliability and heavy traffic delays as proposed by the bidder. This appendix is to be filled in by the bidder and must be presented with the bid.

1.6 Appendix D of §1755.522 is the single-point grounding system audit checklist.

2. Performance Objectives

2.1 *Reliability* (see paragraph (b) of §1755.522).
_____
_____
_____
_____

2.2 *Busy Hour Load Capacity and Traffic Delay* (see paragraph (e)(10) of §1755.522. Describe basis for traffic analysis).
_____
_____
_____
_____

3. Equipment Quantities Dependent on System Design

3.1 *Switch Frames and Circuits.*

3.1.1 Number of Lines.

3.1.1.1 The number of lines to be provided shall include the number required for the termination of subscriber lines, Item 7, Appendix A, plus the number required for routine testing plus any additional to meet the minimum switch increment of the selected system.

3.1.1.2 The number of lines provided for this office will be _____

3.1.2 Number of Ports Used for Trunks

3.1.2.1 The number of trunk ports to be provided shall be based on the trunk quantities required (Item 8, Appendix A) as modified by the minimum increment of the selected system. Provision shall be made for at least 5 percent additional inlet and outlet ports over those required initially. The additional ports shall be used for connecting additional trunks that may be required in the future.

3.1.2.2 The number of trunk ports provided for this office will be _____

3.1.3 Number of Subscriber Directory Numbers

3.1.3.1 The number of directory numbers provided shall be based on the total directory numbers required (Item 6.1.11, appendix A), as modified by the memory increment of the proposed system.

3.1.3.2 The number of subscriber directory numbers provided for this office will be _____

4. RST

4.1 Information for RST's must be supplied for each RST to be furnished.

4.2 Number of line terminals for this RST will be _____ .

4.3 Number of span line terminations to the central office being supplied _____ .

4.4 If the emergency operation option is required, it will provide the following service when connection to the main office is severed:

_____

_____

_____

4.5 The ac power drain at the remote end will be:

Initial _____ Ultimate _____

Voltage: Single-Phase _____ Three-Phase _____

4.6 Special environmental requirements for the remote end:

_____

_____

_____

5. Power

5.1 *AC Power Drain Watts*

Initial _____ Ultimate _____

5.2 *Heat Dissipation Watts*

Provide the initial and ultimate equipment dissipation for each equipment room.

5.2.1 Operating Temperature Range

Minimum _____ Maximum _____

5.2.2 Operating Humidity Range

Minimum _____ Maximum _____

6. Additional Information to be Furnished by Bidder

6.1 The bidder shall accompany its bid with the following information:

a. Two copies of the equipment list and the calculations from which the quantities in the equipment list are determined;

b. Two copies of the traffic tables from which the quantities are determined, other than the full availability tables shown in paragraph (p)(1)(i) of §1755.522;

c. Two copies of detailed switching diagram showing the traffic on each route, the grade of service, the quantity of circuits, and main distributing frames;

d. Block diagram of stored program control and associated maintenance equipment;

e. A prescribed method and criteria for acceptance of the completed central office, which is subject to review;

f. Location of technical assistance service with 24-hour maintenance, and conditions when owner will be charged for access to the service;

g. Calculations showing the method by which ringing machine sizes were derived;

h. Precautions to be taken against static discharge;

i. Details of central office grounding requirements, recognizing local grounding conditions;

j. Details concerning traffic measurement capabilities and formats; and

k. Details concerning AMA features and formats to be provided.

6.2 As a part of the response to the bid, the bidder must also list information concerning the types and quantities of spare parts to be furnished. All units, excluding those units described in paragraph (x)(6)(i)(C) of §1755.522, must fall into one of the four classes. The information must be in the following format:

Unit No.	Unit name	Quantity of units in the CO's and RST's which are bid				Quantity of spare parts furnished with this bid			
		Class 1	Class 2	Class 3	Class 4	Class 1	Class 2	Class 3	Class 4

7. Explanatory Notes

APPENDIX D TO 7 CFR 1755.522—ACCEPTANCE CHECKLIST—SINGLE-POINT GROUNDING SYSTEM

1. Approval Statement

Telephone Company: _____

RUS Borrower Designation: _____

RUS Contract Number: _____

N/A _____

Name:

Central Office: _____

Remote: _____

Date of Inspection: _____

Names of Inspectors:

Owner Representative _____

Central Office Supplies _____

Consulting Engineer _____

Mutually Approved Exceptions:

_____

_____

_____

_____

Grounding System Approval:

Name (Owner Representative) _____

Signature _____

Title _____

Date _____

Name (Supplier Representative) _____

Signature _____

Title _____

Date _____

2. General Survey

2.1 This office is considered to be in the following category for probability of lightning damage based on the Figure 1 map in RUS TE&CM 823 (also refer to paragraph (u)(2) of § 1755.522)

____ Very High ____ Higher than Average ____ Average ____ Lower than Average ____ Very low

2.2 Central office ground field (COGF) to be inspected for proper bonding of conductors to ground rods, etc. COGF to earth grounding reading is _____ ohms. (Refer to RUS TE&CM 802, Appendices C and D, Measurement Techniques.) Is this resistance reading acceptable? (Refer to RUS TE&CM 810, Items 1.6, 4.6.2 and 4.6.3 for protection considerations.)

Acceptable: ____ Yes ____ No

Comments: _____

2.3 Ground connection to be inspected from the master ground bar (MGB) to the central office ground field (COGF) to ensure it is properly sized and installed by most direct route with no sharp bends. (Refer to RUS TE&CM 810, Item 4.3.2 and section 8.1.)

Acceptable: ____ Yes ____ No

Comments: _____

2.4 Building structure grounds (steel rebar in footings, ironwork, etc.) are to be properly bonded and connected to the MGB. (Refer to RUS TE&CM 810, Item 4.3.4.)

Acceptable: ____ Yes ____ No

Comments: _____

2.5 Metallic central office door(s) are to be painted with metallic paint with doorknobs left bare. Door(s) and frames are to be grounded to the building structural ground or the MGB.

Acceptable: ____ Yes ____ No

Comments: _____

2.6 Metallic fences within 6 feet (183 cm) of the exchange building, storage facilities ground field, etc. are to be properly bonded to the COGF outside of the central office building. Handhole enclosure is to be used for the COGF connection to permit inspection and disconnect for earth resistance testing. (Refer to RUS TE&CM 810, Appendix C, Item 4.6.1.)

Acceptable: ____ Yes ____ No

Comments: _____

2.7 Lightning rod systems are to be grounded by a separate dedicated ground field. A bond should be provided between the COGF and the lightning rod ground field. Handhole enclosure is to be used for the COGF connection to permit inspection and disconnect for earth resistance testing. (Refer to RUS TE&CM 810, Item 4.3.2.1.)

Acceptable: ____ Yes ____ No

Comments: _____

2.8 Radio/microwave tower ground grid is to be properly bonded to the COGF by a direct outside connection. Handhole enclosure is to be used for the COGF connection to permit inspection and disconnect for earth resistance testing. (Refer to RUS TE&CM 810, Item 4.3.2 and section 10.)

Acceptable: ____ Yes ____ No

Comments: _____

2.9 If a qualified metallic water system is present, inspect the MGB connecting conductor to ensure that it is properly sized and installed by the most direct route with no sharp bends and that it is clamped solidly on the water pipes. (Refer to RUS TE&CM 810, Item 4.3.3 for details on metallic water system grounding.)

Acceptable: ____ Yes ____ No

Comments: _____

2.10 All power and grounding conductors are to be continuous, end to end, with no splices, size discontinuity or intermediate terminations. If an exception is necessary, unusual care must be taken to assure proper bonding between the two sections. (Refer to RUS TE&CM 810, Appendix C, section 5.)

Acceptable: ____ Yes ____ No

Comments: _____

2.11 All ground conductors should be void of sharp bends along their entire lengths. (Refer to RUS TE&CM 810, Item 8.2.2.)

Acceptable: ____ Yes ____ No

Comments: _____

2.12 Ground conductors should only be placed in nonmetallic conduit. Those routed through metallic conduit require that both ends of the conduit be bonded to the ground conductor. (Refer to RUS TE&CM 810, Item 8.2.4.)

Acceptable: ____ Yes ____ No

Comments: _____

2.13 Ground conductors should not be encircled by metallic clamp. Metallic straps are to be removed and replaced with nonmetallic clamps. (Refer to RUS TE&CM 810, Item 8.2.4.)

Acceptable: ____ Yes ____ No

Comments: _____

2.14 If metallic conduit is used, it is to be insulated from all ironwork.

Acceptable: ____ Yes ____ No

Comments: _____

2.15 Inspect to determine if the required central office supplier electrostatic discharge plates, wrist wraps, antistatic floor mats, etc. are available and properly installed. (Refer to RUS TE&CM 810, Item 12.3.)

Acceptable: ____ Yes ____ No

Comments: _____

2.16 Ground conductors, except green wires, should not be routed close and parallel to other conductors so as to minimize induction on surges into equipment wiring. It is also better not to route these ground conductors through cable racks or troughs, or within the confines of any iron work. (Refer to RUS TE&CM 810, Item 8.2.3.)

Acceptable: ____ Yes ____ No

Comments: _____

3. Master Ground Bar (MGB)

3.1 The designated P, A, N, and I segments of the master ground bar (MGB) should be clearly identified. (Refer to RUS TE&CM 810, Figure 1 for MGB segmentation arrangement.)

Acceptable: ____ Yes ____ No

Comments: _____

3.2 Check for appearance and proper location of following on MGB:

(a) R—Interior radio equipment[1]
(b) C—Cable entrance ground bar[1]
(c) M—MDF ground bar[1]
(d) G—Standby power equipment frame ground[1]
(e) N—Commercial power MGN[2]
(f) B—Building structure ground[2]
(g) L—Central office ground field[2]
(h) W—Water pipe system[2]
(i) N^1—Battery Return[3]
(j) N^2—Outside IGZ: _____[3]
(k) N^3—Outside IGZ: _____[3]
(l) I^1—Ground window bar[4]
(m) I^2—Ground window bar[4]

Acceptable: ____ Yes ____ No

Comments: _____

3.3 All connections to MGB are to be two-hole bolted down copper crimped or compression type terminal lugs. (NOTE: No solder connections are permitted.)

Acceptable: ____ Yes ____ No

Comments: _____

3.4 MGB is to be properly insulated from the mounting surface.

Acceptable: ____ Yes ____ No

Comments: _____

3.5 All connections are to be tight.

Acceptable: ____ Yes ____ No

Comments: _____

3.6 The MGB is to have an anticorrosion coating of the type which enhances conductivity.

Acceptable: ____ Yes ____ No

Comments: _____

3.7 Bar is to be clearly stenciled or legibly labeled ''MGB.''

Acceptable: ____ Yes ____ No

Comments: _____

3.8 All ground leads are to be properly sized and labeled as to point of origin. (Refer to RUS TE&CM 810, Item 8.3.1 and section 8.1.)

Acceptable: ____ Yes ____ No

Comments: _____

[1] Surge Producer—(P)

[2] Surge Absorber—(A)

[3] Grounds to non-IGZ Equipment—(N)

[4] Grounds to IGZ Equipment (GWB's)—(I)

4. Ground Window Bar (GWB)

4.1 All equipment grounds that originate inside of an Isolated Ground Zone (IGZ) are to be terminated on the GWB which is preferably located physically inside the IGZ and insulated from its support. (Refer to RUS TE&CM 810, Item 5.1.)

Acceptable: ____ Yes ____ No

Comments: _____

4.2 Each GWB is to be connected to the MGB by the most direct route with a conductor of 2/0-gauge or coarser, or resistance of less than 0.005 ohms. Parallel conductors for redundancy if required by the supplier. (Refer to RUS TE&CM 810, Item 8.1.2.)

Acceptable: ____ Yes ____ No

Comments: _____

4.3 The metal framework grounds of only that switching equipment and associated electrical equipment located inside of the IGZ should be connected to the GWB as required by the central office equipment supplier. (Refer to RUS TE&CM 810, Item 5.5.)

Acceptable: ____ Yes ____ No

Comments: _____

4.4 GWB is to be clearly stenciled or labeled ''GWB.''

Acceptable: ____ Yes ____ No

Comments: _____

4.5 All connections are to be tight.

Acceptable: ____ Yes ____ No

Comments: _____

5. Isolated Ground Zone (IGZ)

5.1 IGZ areas are to be clearly marked on the floor or in some other easily recognizable manner. (Refer to RUS TE&CM 810, Item 6.1.1)

Acceptable: ____ Yes ____ No

Comments: _____

5.2 Confirm that all framework, cabinets, etc., within the IGZ are ground connected only to the GWB. (Refer to RUS TE&CM 810, Item 5.5.)

Acceptable: ____ Yes ____ No

Comments: _____

5.3 All cable racks, ground mats, switching and transmission equipment within the IGZ are to have ground leads *only* to the GWB. (Refer to RUS TE&CM 810, Item 5.5.2.)

Acceptable: ____ Yes ____ No

Comments: _____

5.4 Review ac power feed arrangement within the IGZ for acceptable receptacle type and confirm that all green wires are properly connected. (Refer to RUS TE&CM 810, Item 5.5.4.)

Acceptable: ____ Yes ____ No

Comments: _____

5.5 All ironwork, metallic conduit, and other equipment associated with the switch are to be properly insulated at the IGZ boundary as stipulated by the supplier. (Refer to RUS TE&CM 810, Item 6.2.)

Acceptable: ____ Yes ____ No

Comments: _____

5.6 With the GWB disconnected from the MGB, the resistance reading of _____ ohms between the GWB and the MGB indicates adequate isolation. (CAUTION: Test is to be conducted only with the approval and under the direction of the central office supplier.)

Acceptable: ____ Yes ____ No

Comments _____

6. Entrance and Tip Cables

6.1 When neither a cable vault nor a splicing trough exists, the outside plant cable should be brought into the central office and spliced to tip cables with a PVC outer jacket (ALVYN[R]) or equivalent as close as practical to the cable entrance. (Refer to RUS TE&CM 810, Item 7.3.4.)

Acceptable: ____ Yes ____ No

Comments: _____

6.2 All outside entrance cables and all tip cable shields are to be separated by at least a 3-inch (7.6 cm) gap between shield ends.

Acceptable: ____ Yes ____ No

Comments: _____

6.3 All entrance cable shields are to be bonded separately to #6 AWG or larger insulated wire or bonding ribbon and connected

to the Cable Entrance Ground Bar (CEGB) by most direct route with minimum bends.

Acceptable: ____ Yes ____ No

Comments: _____

6.4 Outside plant cable shields are to be connected only to the CEGB, and the tip cable shields are to be connected only to the Main Distributing Frame Bar (MDFB).

Acceptable: ____ Yes ____ No

Comments: _____

7. Cable Entrance Ground Bar (CEGB)

7.1 The CEGB is to be properly insulated from the mounting surface. (Refer to TE&CM 810, Item 4.2.1.)

Acceptable: ____ Yes ____ No

Comments: _____

7.2 The CEGB is to be located as close as possible to the physical ends of the entrance cable shields.

Acceptable: ____ Yes ____ No

Comments: _____

7.3 All connections are to use two-hole bolted down copper crimped or compression type terminal lugs. (NOTE: No solder connections are permitted.)

Acceptable: ____ Yes ____ No

Comments: _____

7.4 All connections are to be tight.

Acceptable: ____ Yes ____ No

Comments: _____

7.5 Bar is to be clearly stenciled or legibly labeled ''CEGB.''

Acceptable: ____ Yes ____ No

Comments: _____

7.6 All ground leads are to be properly sized and labeled.

Acceptable: ____ Yes ____ No

Comments: _____

7.7 The CEGB is to have an anticorrosion coating of the type which enhances conductivity.

Acceptable: ____ Yes ____ No

Comments: _____

7.8 The CEGB is to be connected to the MGB by a properly sized conductor and by the most direct route. (Refer to RUS TE&CM 810, section 8.1.)

Acceptable: ____ Yes ____ No

Comments: _____

8. Main Distributing Frame (MDF)

8.1 RUS strongly recommends that MDF protectors be furnished without heat coils. (Refer to RUS TE&CM 810, section 7.6.)

Acceptable: ____ Yes ____ No

Comments: _____

8.2 Incoming cable pairs terminated on MDF protector assemblies should be protected with protector modules. These modules should contain white coded carbon blocks or orange coded gas tube arrestors that are included in the RUS List of Materials. (Refer to RUS TE&CM 810, Item 7.4)

Acceptable: ____ Yes ____ No

Comments: _____

7 _____

8.3 All incoming subscriber cable pairs are to be properly terminated at either a protector equipped terminal or connected to ground.

Acceptable: ____ Yes ____ No

Comments _____

8.4 MDF protector assemblies may be mounted directly on the vertical frame ironwork. Protector assemblies on each vertical are interconnected with each other and the Main Distributing Frame Bar (MDFB) with a #6 copper grounding conductor. Alternative means of connecting to the MDFB are also acceptable which do not rely on the frame ironwork for conducting surge currents to ground. (Refer to RUS TE&CM 810, section 7.)

Acceptable: ____ Yes ____ No

Comments _____

8.5 Protective ''ground connections'' should be provided between the MDFB and the frame ironwork for personnel protection regardless of the type of protector assembly used. Protective ground leads should be 14-gauge, less than 12 inches (30.5 cm) in length with paint thoroughly removed at point of

connection to the ironwork. (Refer to RUS TE&CM 810, Item 7.1.3.)

Acceptable: ____ Yes ____ No

Comments _____

8.6 The MDFB should be insulated from the frame ironwork in all cases where it is used as a Master Ground Bar (MGB). (Refer to RUS TE&CM 810, Item 7.1.2.)

Acceptable: ____ Yes ____ No

Comments _____

8.7 Where the MDFB is used as the MGB in very small offices the protective ''ground connections'' should be connected on the N section of the bar. The MDF line protector assembly grounds should be connected to the P section of the bar. (Refer to RUS TE&CM 810, Item 7.1.4.)

Acceptable: ____ Yes ____ No

Comments _____

8.8 The MDFB is to be connected to the MGB by the most direct path with minimum bends and proper conductor size. (Refer to RUS TE&CM 810, Item 8.1.4.)

Acceptable: ____ Yes ____ No

Comments _____

8.9 The MDFB should be free of all other ground leads when not used as an MGB.

Acceptable: ____ Yes ____ No

Comments _____

8.10 Alternative arrangements which insulate the line protector assemblies and MDFB from the frame ironwork may require a direct ground connection of the frame ironwork to the MGB for personnel protection. Conductor is properly sized and tightened with paint removal on main frame ironwork at point of connection.

Acceptable: ____ Yes ____ No

Comments _____

9. Power Service Protection and Grounding

9.1 The ground conductor between the ac power system multigrounded neutral (MGN) at the main ac disconnect panel and the master ground bar (MGB) is to be properly sized and connected. (Refer to RUS TE&CM 810, Items 2.19, 4.3.1 and 8.1.3.)

Acceptable: ____ Yes ____ No

Comments: _____

9.2 If there is a non-MGN ac power system, there is to be a properly sized and connected insulated conductor bond between the power service ground electrode and the MGB. (Refer to RUS TE&CM 810, Item 4.3.1.1.)

Acceptable: ____ Yes ____ No

Comments: _____

9.3 AC conductors including ground conductors serving 120-volt ac electric convenience receptacles and all direct wire peripheral equipment, located in the IGZ, should be sized in accordance with normal ''green wire'' criteria. (Refer to RUS TE&CM 810, Items 5.5.4, 5.5.5, and 5.5.6.)

Acceptable: ____ Yes ____ No

Comments: _____

9.4 Minimum protection for ac power serving the central office buildings should consist of an RUS accepted secondary arrestor at the service entrance. (Refer to RUS TE&CM 810, section 9.)

Acceptable: ____ Yes ____ No

Comments: _____

9.5 A properly sized conductor for ground bonding between the standby power plant framework (not separately derived) and the MGB is to be provided to equalize framework voltages for personnel safety reasons. (Refer to RUS TE&CM 810, Item 4.2.4.)

Acceptable: ____ Yes ____ No

Comments: _____

10. Miscellaneous

10.1 All non-IGZ equipment frames, relay racks, cable racks and other ironwork are to be properly connected to the MGB. (Refer to TE&CM 810, Item 4.4.)

Acceptable: ____ Yes ____ No

Comments: _____

10.2 Shields on high frequency intra-office cables are to be properly isolated and connected only to an isolation ground bar in the relay rack. All shielded cables entering the IGZ should only be referenced at the IGZ termination point as given by the manufacturer. (Refer to RUS TE&CM 810, Item 7.2.1.2.)

Acceptable: ____ Yes ____ No

Comments: _____

_____

_____

10.3 Isolation ground bars in the relay racks are to be properly connected to the MGB with appropriate sized conductor with no sharp bends.

Acceptable: ____ Yes ____ No

Comments: _____

_____

_____

10.4 All radio equipment cabinet(s) are to be at least 10 feet (305 cm) from the IGZ.

Acceptable: ____ Yes ____ No

Comments: _____

_____

_____

10.5 The metal spare parts cabinet is to be grounded with a #6 AWG or larger insulated wire to non-IGZ cable rack, etc. or directly to the MGB.

Acceptable: ____ Yes ____ No

Comments: _____

_____

_____

[58 FR 30938, May 28, 1993; 58 FR 36252, July 6, 1993; as amended at 60 FR 1711, Jan. 5, 1995, 60 FR 64312, 64314, Dec. 15, 1995; 69 FR 18803, Apr. 9, 2004]

§§ 1755.523–1755.699 [Reserved]

§ 1755.700 RUS specification for aerial service wires.

§§ 1755.701 through 1755.704 cover the requirements for aerial service wires.

[61 FR 26074, May 24, 1996]

§ 1755.701 Scope.

(a) This section covers the requirements for aerial service wires intended for aerial subscriber drops.

(b) The aerial service wires can be either copper coated steel reinforced or nonmetallic reinforced designs.

(c) For the copper coated steel reinforced design, the reinforcing members are the conductors.

(1) The conductors are solid copper-covered steel wires.

(2) The wire structure is completed by insulating the conductors with an overall extruded plastic insulating compound.

(d) For the nonmetallic reinforced design, the conductors are solid copper individually insulated with an extruded solid insulating compound.

(1) The insulated conductors are either laid parallel (two conductor design only) or twisted into pairs (a star-quad configuration is permitted for two pair wires).

(2) The wire structure is completed by the application of nonmetallic reinforcing members and an overall plastic jacket.

(e) All wires sold to RUS borrowers for projects involving RUS loan funds under §§ 1755.700 through 1755.704 must be accepted by RUS Technical Standards Committee ''A'' (Telecommunications). For wires manufactured to the specification of §§ 1755.700 through 1755.704, all design changes to an accepted design must be submitted for acceptance. RUS will be the sole authority on what constitutes a design change.

(f) Materials, manufacturing techniques, or wire designs not specifically addressed by §§ 1755.700 through 1755.704 may be allowed if accepted by RUS. Justification for acceptance of modified materials, manufacturing techniques, or wire designs must be provided to substantiate product utility and long term stability and endurance.

[61 FR 26074, May 24, 1996]

§ 1755.702 Copper coated steel reinforced (CCSR) aerial service wire.

(a) *Conductors.* (1) Each conductor shall comply with the requirements specified in the American National Standard Institute/Insulated Cable Engineers Association, Inc. (ANSI/ICEA) S–89–648–1993, paragraphs 2.1 through 2.1.5. The ANSI/ICEA S–89–648–1993 Standard For Telecommunications Aerial Service Wire, Technical Requirements (approved by ANSI July 11, 1994) is incorporated by reference in accordance with 5 U.S.C. 552(a) and 1 CFR part 51. Copies of ANSI/ICEA S–89–648–1993 are available for inspection during normal business hours at RUS, room 2845, U.S. Department of Agriculture, Washington, DC 20250–1500, or at the National Archives and Records Administration (NARA). For information on the availability of this material at NARA, call 202–741–6030, or go to: *http://www.archives.gov/federal_register/code_of_federal_regulations/ibr_locations.html.* Copies are available

from ICEA, P. O. Box 440, South Yarmouth, MA 02664, telephone number (508) 394–4424.

(2) Factory joints in conductors shall comply with the requirement specified in ANSI/ICEA S–89–648–1993, paragraph 2.1.6.

(b) *Conductor insulation*. (1) The raw materials used for the conductor insulation shall comply with the requirements specified in ANSI/ICEA S–89–648–1993, paragraph 3.1.1.

(2) The raw materials shall be accepted by RUS prior to their use.

(3) The finished conductor insulation shall be free from holes, splits, blisters, or other imperfections and shall be as smooth as is consistent with best commercial practice.

(4) The finished conductor insulation shall comply with the requirements specified in ANSI/ICEA S–89–648–1993, paragraphs 3.1.5 through 3.1.5.4.

(5) The insulation shall have a minimum spot thickness of not less than 0.9 millimeters (mm) (0.03 inches (in.)) at any point.

(c) *Wire assembly*. (1) The two conductors shall be insulated in parallel to form an integral configuration.

(2) The finished wire assembly shall be either a flat or a notched oval. Other finished wire assemblies may be used provided that they are accepted by RUS prior to their use.

(3) The overall dimensions of the finished wire assembly shall be in accordance with the following requirements:

Diameter	Dimensions	
	Minimum mm (in.)	Maximum mm (in.)
Major	5.5 (0.22)	8.0 (0.31)
Minor	3.0 (0.12)	5.0 (0.19)

(d) *Conductor marking*. The insulated conductors of a finished wire shall be marked in accordance with the requirements specified in ANSI/ICEA S–89–648–1993, paragraph 3.1.4.

(e) *Electrical requirements*—(1) *Conductor resistance*. The direct current (dc) resistance of each conductor in a completed CCSR aerial service wire shall comply with the requirement specified in ANSI/ICEA S–89–648–1993, paragraph 7.1.2.

(2) *Wet mutual capacitance*. The wet mutual capacitance of the completed CCSR aerial service wire shall comply with the requirement specified in ANSI/ICEA S–89–648–1993, paragraph 7.1.3.

(3) *Wet attenuation*. The wet attenuation of the completed CCSR aerial service wire shall comply with the requirement specified in ANSI/ICEA S–89–648–1993, paragraph 7.1.4.

(4) *Wet insulation resistance*. The wet insulation resistance of the completed CCSR aerial service wire shall comply with the requirement specified in ANSI/ICEA S–89–648–1993, paragraph 7.1.5.

(5) *Dielectric strength*. (i) The wet dielectric strength between conductors and between each conductor of the completed CCSR aerial service wire and the surrounding water shall comply with the requirement specified in ANSI/ICEA S–89–648–1993, paragraph 7.1.6.

(ii) The dry dielectric strength between conductors of the completed CCSR aerial service wire shall comply with the requirement specified in ANSI/ICEA S–89–648–1993, paragraph 7.1.7.

(6) *Fusing coordination*. The completed CCSR aerial service wire shall comply with the fusing coordination requirement specified in ANSI/ICEA S–89–648–1993, paragraph 7.1.8.

(7) *Insulation imperfections*. Each length of completed CCSR aerial service wire shall comply with the requirement specified in ANSI/ICEA S–89–648–1993, paragraph 7.1.9.

(f) *Mechanical requirements*—(1) *Impact test*. (i) All CCSR aerial service wires manufactured in accordance with this section shall comply with the unaged impact test specified in ANSI/ICEA S–89–648–1993, paragraph 8.1.2.

(ii) All CCSR aerial service wires manufactured in accordance with this section shall comply with the aged impact test specified in ANSI/ICEA S–89–648–1993, paragraph 8.1.3.

(2) *Abrasion resistance test*. All CCSR aerial service wires manufactured in accordance with this section shall comply with the abrasion resistance test specified in ANSI/ICEA S–89–648–1993, paragraph 8.1.4.

(3) *Static load test*. All CCSR aerial service wires manufactured in accordance with this section shall comply with the static load test specified in

ANSI/ICEA S–89–648–1993, paragraph 8.1.5.

(4) *Plasticizer compatibility test.* All CCSR aerial service wires manufactured in accordance with this section shall comply with the plasticizer compatibility test specified in ANSI/ICEA S–89–648–1993, paragraph 8.1.8.

(g) *Environmental requirements*—(1) *Cold temperature handling test.* (i) All CCSR aerial service wires manufactured in accordance with this section shall comply with the unaged cold temperature handling test specified in ANSI/ICEA S–89–648–1993, paragraph 8.2.1.

(ii) All CCSR aerial service wires manufactured in accordance with this section shall comply with the aged cold temperature handling test specified in ANSI/ICEA S–89–648–1993, paragraph 8.2.2.

(2) *Light absorption test.* All CCSR aerial service wires manufactured in accordance with this section shall comply with the light absorption test specified in ANSI/ICEA S–89–648–1993, paragraph 8.2.3.

(3) *Low temperature separation test.* All CCSR aerial service wires manufactured in accordance with this section shall comply with the low temperature separation test specified in ANSI/ICEA S–89–648–1993, paragraph 8.2.4.

(4) *Flammability test.* All CCSR aerial service wires manufactured in accordance with this section shall comply with the flammability test specified in ANSI/ICEA S–89–648–1993, paragraph 8.3.

(5) *Wire listing.* All CCSR aerial service wires manufactured in accordance with this section shall comply with the listing requirements specified in ANSI/ICEA S–89–648–1993, paragraph 8.4.

(h) *Identification marker.* Each length of CCSR aerial service wire shall be identified in accordance with ANSI/ICEA S–89–648–1993, paragraph 9.1.4. When surface marking is employed, the color of the initial marking shall be either white or silver.

(i) *Length marking (optional).* (1) Sequentially numbered length marking of the completed CCSR aerial service wire may be used at the option of the manufacturer unless specified by the end user.

(2) When sequentially numbered length markings are used, the length markings shall be in accordance with ANSI/ICEA S–89–648–1993, paragraph 9.1.5. The color of the initial marking shall be either white or silver.

(j) *Durability of marking.* The durability of the marking of the CCSR aerial service wire shall comply with the requirements specified in ANSI/ICEA S–89–648–1993, paragraph 9.1.6.

[61 FR 26075, May 24, 1996, as amended at 69 FR 18803, Apr. 9, 2004]

§ 1755.703 Nonmetallic reinforced (NMR) aerial service wire.

(a) *Conductors.* (1) Each conductor shall comply with the requirements specified in ANSI/ICEA S–89–648–1993, paragraphs 2.2 and 2.2.1. The ANSI/ICEA S–89–648–1993 Standard For Telecommunications Aerial Service Wire, Technical Requirements (approved by ANSI July 11, 1994) is incorporated by reference in accordance with 5 U.S.C. 552(a) and 1 CFR part 51. Copies of ANSI/ICEA S–89–648–1993 are available for inspection during normal business hours at RUS, room 2845, U.S. Department of Agriculture, Washington, DC 20250–1500, or at the National Archives and Records Administration (NARA). For information on the availability of this material at NARA, call 202–741–6030, or go to: *http://www.archives.gov/federal_register/code_of_federal_regulations/ibr_locations.html.* Copies are available from ICEA, P. O. Box 440, South Yarmouth, MA 02664, telephone number (508) 394–4424.

(2) Factory joints made in the conductors during the manufacturing process shall comply with the requirement specified in ANSI/ICEA S–89–648–1993, paragraph 2.2.2.

(b) *Conductor insulation.* (1) The raw materials used for the conductor insulation shall comply with the requirements specified in ANSI/ICEA S–89–648–1993, paragraphs 3.2 through 3.2.2.

(2) The finished conductor insulation shall comply with the requirements specified in ANSI/ICEA S–89–648–1993, paragraph 3.2.3.

(3) The dimensions of the insulated conductors shall comply with the requirements specified in ANSI/ICEA S–89–648–1993, paragraph 3.2.3.1.

(4) The colors of the insulation shall comply with the requirements specified

in ANSI/ICEA S–89–648–1993, paragraph 3.2.3.2.

(5) A permissible overall performance level of faults in conductor insulation shall comply with the requirement specified in ANSI/ICEA S–89–648–1993, paragraph 3.2.4.6. The length count and number of faults shall be recorded. The information shall be retained for a period of 6 months and be available for review by RUS when requested.

(6) Repairs to the conductor insulation during manufacture are permissible. The method of repair shall be accepted by RUS prior to its use. The repaired insulation shall comply with the requirement specified in ANSI/ICEA S–89–648–1993, paragraph 3.2.3.3.

(7) All repaired sections of insulation shall be retested in the same manner as originally tested for compliance with paragraph (b)(5) of this section.

(8) The colored insulating material removed from or tested on the conductor, from a finished wire shall comply with the requirements specified in ANSI/ICEA S–89–648–1993, paragraphs 3.2.4 through 3.2.4.5.

(c) *Identification of pairs and layup of pairs*. (1) The insulation shall be colored coded to identify:

(i) The tip and ring conductor of each pair; and

(ii) Each pair in the completed wire.

(2) The colors to be used in the pairs together with the pair numbers shall be in accordance with the table specified in ANSI/ICEA S–89–648–1993, paragraph 4.1.1.

(3) The insulated conductors shall be either layed parallel (two conductor design only) or twisted into pairs.

(4) When using parallel conductors for the two conductor design, the parallel conductors shall be designed to enable the wire to meet the electrical requirements specified in paragraph (g) of this section.

(5) When twisted pairs are used, the following requirements shall be met:

(i) The pair twists shall be designed to enable the wire to meet the electrical requirements specified in paragraph (g) of this section; and

(ii) The average length of pair twists in any pair in the finished wire, when measured on any 3 meter (10 foot) length, shall not exceed the requirement specified in ANSI/ICEA S–89–648–1993, paragraph 4.1.

(6) An alternative method of forming the two-pair wire is the use of a star-quad configuration.

(i) The assembly of the star-quad shall be such as to enable the wire to meet the electrical requirements specified in paragraph (g) of this section.

(ii) The star-quad configuration shall be assembled in accordance with ANSI/ICEA S–89–648–1993, paragraph 4.1.2.

(iii) The average length of twist for the star-quad in the finished wire, when measured on any 3 meter (10 foot) length, shall not exceed the requirement specified in ANSI/ICEA S–89–648–1993, paragraph 4.1.

(iv) The color scheme used to provide identification of the tip and ring conductors of each pair in the star-quad shall comply with the table specified in ANSI/ICEA S–89–648–1993, paragraph 4.1.2.

(d) *Strength members*. The strength members shall comply with the requirements specified in ANSI/ICEA S–89–648–1993, paragraphs 6.1 and 6.1.1.

(e) *Wire jacket*. (1) The jacket shall comply with the requirements specified in ANSI/ICEA S–89–648–1993, paragraphs 5.1 and 5.1.1.

(2) The jacket raw materials shall be accepted by RUS prior to their use.

(f) *Wire assembly*. The finished wire assembly shall be in accordance with ANSI/ICEA S–89–648–1993, paragraph 5.1.3 and Figure 5–1.

(g) *Electrical requirements*—(1) *Conductor resistance*. The dc resistance of each conductor in a completed NMR aerial service wire shall comply with the requirement specified in ANSI/ICEA S–89–648–1993, paragraph 7.2.2.

(2) *Resistance unbalance*. (i) The dc resistance unbalance between the two conductors of any pair in a completed NMR aerial service wire and the average resistance unbalance of all pairs in a Quality Control Lot shall comply with the requirements specified in ANSI/ICEA S–89–648–1993, paragraph 7.2.3.

(ii) The resistance unbalance between tip and ring conductors shall be random with respect to the direction of unbalance. That is, the resistance of

the tip conductors shall not be consistently higher with respect to the ring conductors and vice versa.

(3) *Dry mutual capacitance*. The dry mutual capacitance of the completed NMR aerial service wire shall comply with the requirements specified in ANSI/ICEA S–89–648–1993, paragraph 7.2.4, Type 1.

(4) *Pair-to-pair capacitance unbalance*. The pair-to-pair capacitance unbalance as measured on the completed NMR aerial service wire shall comply with the requirements specified in ANSI/ICEA S–89–648–1993, paragraph 7.2.5.

(5) *Attenuation*. (i) The dry attenuation of the completed NMR aerial service wire shall comply with the requirement specified in ANSI/ICEA S–89–648–1993, paragraph 7.2.7.

(ii) The wet attenuation of the completed NMR aerial service wire shall comply with the requirement specified in ANSI/ICEA S–89–648–1993, paragraph 7.2.8.

(6) *Insulation resistance*. (i) The dry insulation resistance of the completed NMR aerial service wire shall comply with the requirement specified in ANSI/ICEA S–89–648–1993, paragraph 7.2.9.

(ii) The wet insulation resistance of the completed NMR aerial service wire shall comply with the requirement specified in ANSI/ICEA S–89–648–1993, paragraph 7.2.10.

(7) *Wet dielectric strength*. The wet dielectric strength between conductors and between each conductor of the completed NMR aerial service wire and the surrounding water shall comply with the requirement specified in ANSI/ICEA S–89–648–1993, paragraph 7.2.11.

(8) *Fusing coordination*. The completed NMR aerial service wire shall comply with the fusing coordination requirement specified in ANSI/ICEA S–89–648–1993, paragraph 7.2.13.

(9) *Crosstalk loss*. (i) The output-to-output far-end crosstalk loss (FEXT) for any pair of completed NMR aerial service wire shall comply with the requirement specified in ANSI/ICEA S–89–648–1993, paragraph 7.2.14.

(ii) The input-to-input near-end crosstalk loss (NEXT) for any pair of completed NMR aerial service wire shall comply with the requirement specified in ANSI/ICEA S–89–648–1993, paragraph 7.2.14.

(h) *Mechanical requirements*—(1) *Impact test*. (i) All NMR aerial service wires manufactured in accordance with this section shall comply with the unaged impact test specified in § 1755.702(f)(1)(i).

(ii) All NMR aerial service wires manufactured in accordance with this section shall comply with the aged impact test specified in § 1755.702(f)(1)(ii).

(2) *Abrasion resistance test*. All NMR aerial service wires manufactured in accordance with this section shall comply with the abrasion resistance test specified in § 1755.702(f)(2).

(3) *Static load test*. All NMR aerial service wires manufactured in accordance with this section shall comply with the static load test specified in § 1755.702(f)(3).

(4) *Elongation test*. All NMR aerial service wires manufactured in accordance with this section shall comply with the elongation test specified in ANSI/ICEA S–89–648–1993, paragraph 8.1.7.

(5) *Plasticizer compatibility test*. All NMR aerial service wires manufactured in accordance with this section shall comply with the plasticizer compatibility test specified in § 1755.702(f)(4).

(i) *Environmental requirements*—(1) *Cold temperature handling test*. (i) All NMR aerial service wires manufactured in accordance with this section shall comply with the unaged cold temperature handling test specified in § 1755.702(g)(1)(i).

(ii) All NMR aerial service wires manufactured in accordance with this section shall comply with the aged cold temperature handling test specified in § 1755.702(g)(1)(ii).

(2) *Light absorption test*. All NMR aerial service wires manufactured in accordance with this section shall comply with the light absorption test specified in § 1755.702(g)(2).

(3) *Flammability test*. All NMR aerial service wires manufactured in accordance with this section shall comply with the flammability test specified in § 1755.702(g)(4).

(4) *Wire listing*. All NMR aerial service wires manufactured in accordance with this section shall comply with the

listing requirements specified in § 1755.702(g)(5).

(j) *Ripcord (optional).* (1) A ripcord may be used in the NMR aerial service wire structure at the option of the manufacturer unless specified by the end user.

(2) When a ripcord is used it shall comply with the requirements specified in ANSI/ICEA S–89–648–1993, paragraphs 4.2 through 4.2.3.

(k) *Identification marker.* Each length of NMR aerial service wire shall be identified in accordance with ANSI/ICEA S–89–648–1993, paragraphs 9.1 through 9.1.4. When surface marking is employed, the color of the initial marking shall be either white or silver.

(l) *Length marking (optional).* (1) Sequentially numbered length marking of the completed NMR aerial service wire may be used at the option of the manufacturer unless specified by the end user.

(2) When sequentially numbered length markings are used, the length markings shall be in accordance with in accordance with § 1755.702(i)(2).

(m) *Durability of marking.* The durability of the marking of the NMR aerial service wire shall comply with the requirements specified in § 1755.702(j).

[61 FR 26076, May 24, 1996, as amended at 69 FR 18803, Apr. 9, 2004]

§ 1755.704 Requirements applicable to both CCSR and NMR aerial service wires.

(a) *Acceptance testing.* (1) The tests described in §§ 1755.700 through 1755.704 are intended for acceptance of wire designs and major modifications of accepted designs. What constitutes a major modification is at the discretion of RUS. These tests are intended to show the inherent capability of the manufacturer to produce wire products having long life and stability.

(2) For initial acceptance, the manufacturer shall:

(i) Certify that the product fully complies with each paragraph in §§ 1755.700 through 1755.704;

(ii) Agree to periodic plant inspections by RUS;

(iii) Certify whether the product complies with the domestic origin manufacturing provisions of the ''Buy American'' requirements of the Rural Electrification Act of 1938 (7 U.S.C. 903 note), as amended (the ''REA Buy-American provision'');

(iv) Submit at least three written user testimonials concerning field performance of the product; and

(v) Provide any other nonpropriety data deemed necessary by the Chief, Outside Plant Branch (Telecommunications).

(3) In order for RUS to consider a manufacturer's request that a product be requalified, the manufacturer shall certify not later than June 30 of the year in which requalification is required, that the product:

(i) Fully complies with each paragraph in §§ 1755.700 through 1755.704; and

(ii) Does or does not comply with the domestic origin manufacturing provisions of the REA Buy American provisions. The required certifications shall be dated within 90 days of the submission.

(4) Initial and requalification acceptance requests should be addresses to: Chairman, Technical Standards Committee ''A'' (Telecommunications), Telecommunications Standards Division, Rural Utilities Service, AG Box 1598, Washington, DC 20250–1598.

(b) *Extent of testing*—(1) *Tests on 100 percent of completed wire.* (i) Each conductor in the completed CCSR and NMR aerial service wire shall be tested for continuity in accordance with ANSI/ICEA S–89–648–1993, paragraphs 7.1.1 and 7.2.1, respectively. The ANSI/ICEA S–89–648–1993 Standard For Telecommunications Aerial Service Wire, Technical Requirements (approved by ANSI July 11, 1994) is incorporated by reference in accordance with 5 U.S.C. 552(a) and 1 CFR part 51. Copies of ANSI/ICEA S–89–648–1993 are available for inspection during normal business hours at RUS, room 2845, U.S. Department of Agriculture, Washington, DC 20250–1500, or at the National Archives and Records Administration (NARA). For information on the availability of this material at NARA, call 202–741–6030, or go to: *http://www.archives.gov/federal_register/code_of_federal_regulations/ibr_locations.html.* Copies are available from ICEA, P. O. Box 440, South Yarmouth, MA 02664, telephone number (508) 394–4424.

(ii) Each conductor in the completed CCSR and NMR aerial service wire shall be tested for shorts in accordance with ANSI/ICEA S–89–648–1993, paragraphs 7.1.1 and 7.2.1, respectively.

(iii) Each length of completed CCSR and NMR aerial service wire shall be tested for insulation imperfections in accordance with §1755.702(e)(7) and §1755.703(b)(5), respectively.

(2) *Capability tests.* Tests on a quality assurance basis shall be made as frequently as is required for each manufacturer to determine and maintain compliance with:

(i) Performance of the conductors;

(ii) Performance of the conductor insulation and jacket material;

(iii) Sequential marking and lettering;

(iv) Mutual capacitance, capacitance unbalance, attenuation, and crosstalk;

(v) Conductor resistance, resistance unbalance, and insulation resistance;

(vi) Dielectric strength and fusing coordination;

(vii) Impact, abrasion, static load, elongation, and plasticizer compatibility tests; and

(viii) Cold temperature handling, light absorption, low temperature separation, and flammability tests.

(c) *Summary of records of electrical and physical tests.* (1) Each manufacturer shall maintain suitable summary records for a period of at least 3 years of all electrical and physical tests required on completed wire as set forth in paragraph (b) of this section. The test data for a particular lot of aerial service wire shall be in a form such that it may be readily available to the purchaser or to RUS upon request.

(2) Measurements and computed values shall be rounded off to the number of places or figures specified for the requirement according to ANSI/ICEA S–89–648–1993, paragraph 1.3.

(d) *Manufacturing irregularities.* (1) Repairs to the insulation of CCSR aerial service wires are not permitted in wires supplied to end users under §§1755.700 through 1755.704.

(2) Repairs to the jacket of NMR aerial service wires are not permitted in wires supplied to end users under §§1755.700 through 1755.704.

(e) *Splicing.* Splicing of completed CCSR and NMR aerial service wires shall comply with the requirement specified in ANSI/ICEA S–89–648–1993, paragraph 8.1.1.

(f) *Preparation for shipment.* (1) CCSR and NMR aerial service wire shall be shipped either in coils or on reels.

(2) When CCSR and NMR aerial service wires are shipped on reels the following provisions shall apply:

(i) The diameter of the drum shall be large enough to prevent damage to the wire from reeling or unreeling. The reels shall be substantial and so constructed as to prevent damage to the wire during shipment and handling;

(ii) A waterproof corrugated board or other suitable means of protection accepted by RUS prior to its use may be applied to the reel. If the waterproof corrugated board or other suitable material is used for protection, it shall be suitably secured in place to prevent damage to the wire during storage and handling. The use of the waterproof corrugated board or other suitable means of protection shall be at the option of the manufacturer unless specified by the end user;

(iii) The outer end of the wire shall be securely fastened to the reel head so as to prevent the wire from becoming loose in transit. The inner end of the wire shall be securely fastened in such a way as to make it readily available if required for electrical testing. Spikes, staples, or other fastening devices which penetrate the conductor insulation of the CCSR aerial service wire and the jacket of the NMR aerial service wire shall not be used. The method of fastening the wire ends shall be accepted by RUS prior to their use;

(iv) Each length of wire shall be wound on a separate reel;

(v) Each reel shall be plainly marked to indicate the direction in which it should be rolled to prevent loosening of the wire on the reel; and

(vi) Each reel shall be stenciled or labeled on either one or both sides with the following information:

(A) Customer order number;

(B) Manufacturer's name and product code;

(C) Factory reel number and year of manufacture;

(D) Gauge of conductors and pair size of wire;

(E) Length of wire; and

(F) RUS designation letter ''K.''

(3) When CCSR and NMR aerial service wires are shipped in coils the following provisions shall apply:

(i) The diameter of the coil shall be large enough to prevent damage to the wire from coiling or uncoiling;

(ii) The nominal length of the wire in a coil shall be 305 meters (1,000 feet). No coil shall be less than 290 meters (950 feet) long or more than 460 meters (1,500 feet) long; however, 25 percent of the total number of coils may be less than 305 meters (1,000 feet);

(iii) The coils of wire shall be wound securely with strong tape in four separate evenly spaced places;

(iv) The coils may be protected from damage by wrapping the coil with heavy paper, burlap, or other suitable material accepted by RUS prior to its use. The use of the heavy paper, burlap, or other suitable means of protection shall be at the option of the manufacturer unless specified by the end user; and

(v) Each coil shall be tagged with the following information:

(A) Customer order number;

(B) Manufacturer's name and product code;

(C) Year of manufacture;

(D) Gauge of conductors and pair size of wire;

(E) Length of wire; and

(F) RUS designation letter ''K.''

(4) In lieu of wrapping the coil with heavy paper, burlap, or other suitable material, the coil may be packaged in a moisture resistant carton.

(5) When the coils are shipped in moisture resistant cartons, each carton shall be marked with the information specified in paragraphs (f)(3)(v)(A) through (f)(3)(v)(F) of this section.

(6) Other methods of shipment may be used if accepted by RUS prior to their use.

(7) When NMR aerial service wire is shipped, the ends of the wire shall be sealed in accordance with ANSI/ICEA S–89–648–1993, paragraph 9.2.

[61 FR 26077, May 24, 1996, as amended at 69 FR 18803, Apr. 9, 2004]

§§ 1755.705–1755.859 [Reserved]

§ 1755.860 RUS specification for filled buried wires.

(a) *Scope.* (1) This section covers the requirements for filled buried wires intended for direct burial as a subscriber drop and/or distribution wire.

(i) The conductors are solid copper, individually insulated with an extruded solid insulating compound.

(ii) The insulated conductors are twisted into pairs (a star-quad configuration is permitted for the two pair wires) which are then stranded or oscillated to form a cylindrical core.

(iii) A moisture resistant filling compound is applied to the stranded conductors completely covering the insulated conductors and filling the interstices between the pairs.

(iv) The wire structure is completed by the application of an optional core wrapping material, an inner jacket, a flooding compound, a shield, a flooding compound, and an overall plastic jacket.

(2) The number of pairs and gauge size of conductors which are used within the RUS program are provided in the following table:

American Wire Gauge (AWG)	22	24
Pairs	2	2
	3	3

(3) All wires sold to RUS borrowers for projects involving RUS loan funds under this section must be accepted by RUS Technical Standards Committee ''A'' (Telephone). For wires manufactured to the specification of this section, all design changes to an accepted design must be submitted for acceptance. RUS will be the sole authority on what constitutes a design change.

(4) Materials, manufacturing techniques, or wire designs not specifically addressed by this section may be allowed if accepted by RUS. Justification for acceptance of modified materials, manufacturing techniques, or wire designs must be provided to substantiate product utility and long term stability and endurance.

(5) The American National Standards Institute/Electronic Industries Association (ANSI/EIA) 359-A-84, EIA Standard

Colors for Color Identification and Coding, referenced in this section is incorporated by reference by RUS. This incorporation by reference was approved by the Director of the Federal Register in accordance with 5 U.S.C. 552(a) and 1 CFR part 51. Copies of ANSI/EIA 359-A-84 are available for inspection during normal business hours at RUS, room 2845, U.S Department of Agriculture, Washington, DC 20250–1500, or at the National Archives and Records Administration (NARA). For information on the availability of this material at NARA, call 202–741–6030, or go to: *http://www.archives.gov/federal_register/code_of_federal_regulations/ibr_locations.html*. Copies are available from EIA, 2001 Pennsylvania Avenue, NW., suite 900, Washington, DC 20006, telephone number (202) 457–4966.

(6) American Society for Testing and Materials specifications (ASTM) A 505–87, Standard Specification for Steel, Sheet and Strip, Alloy, Hot-Rolled and Cold-Rolled, General Requirements for; ASTM B 3–90, Standard Specification for Soft or Annealed Copper Wire; ASTM B 193–87, Standard Test Method for Resistivity of Electrical Conductor Materials; ASTM B 224–91, Standard Classification of Coppers; ASTM B 694–86, Standard Specification for Copper, Copper Alloy, and Copper-Clad Stainless Steel Sheet and Strip for Electrical Cable Shielding; ASTM D 150–87, Standard Test Methods for A-C Loss Characteristics and Permittivity (Dielectric Constant) of Solid Electrical Insulating Materials; ASTM D 257–91, Standard Test Methods for D-C Resistance or Conductance of Insulating Materials; ASTM D 1238–90b, Standard Test Method for Flow Rates of Thermoplastics by Extrusion Plastometer; ASTM D 1248–84(1989), Standard Specification for Polyethylene Plastics Molding and Extrusion Materials; ASTM D 1535–89, Standard Test Method for Specifying Color by the Munsell System; ASTM D 3349–86, Standard Test Method for Absorption Coefficient of Carbon Black Pigmented Ethylene Plastic; ASTM D 4101–82(1988), Standard Specification for Propylene Plastic Injection and Extrusion Materials; ASTM D 4565–90a, Standard Test Methods for Physical and Environmental Performance Properties of Insulations and Jackets for Telecommunications Wire and Cable; ASTM D 4566–90, Standard Test Methods for Electrical Performance Properties of Insulations and Jackets for Telecommunications Wire and Cable; ASTM D 4568–86, Standard Test Methods for Evaluating Compatibility between Cable Filling and Flooding Compounds and Polyolefin Cable Materials; ASTM D 4872–88, Standard Test Method for Dielectric Testing of Wire and Cable Filling Compounds; ASTM E 8–91, Standard Test Methods of Tension Testing of Metallic Materials; and ASTM E 29–90, Standard Practice for Using Significant Digits in Test Data to Determine Conformance with Specifications, referenced in this section are incorporated by reference by RUS. These incorporations by references were approved by the Director of the Federal Register in accordance with 5 U.S.C. 552(a) and 1 CFR part 51. Copies of the ASTM standards are available for inspection during normal business hours at RUS, room 2845, U.S. Department Agriculture, Washington, DC 20250–1500, or at the National Archives and Records Administration (NARA). For information on the availability of this material at NARA, call 202–741–6030, or go to: *http://www.archives.gov/federal_register/code_of_federal_regulations/ibr_locations.html*. Copies are available from ASTM, 1916 Race Street, Philadelphia, Pennsylvania 19103–1187, telephone number (215) 299–5585.

(b) *Conductors and conductor insulation*. (1) Each conductor must be a solid round wire of commercially pure annealed copper. Conductors must meet the requirements of the American Society for Testing and Materials (ASTM) B 3–90 except that requirements for *Dimensions and Permissible Variations* are waived and elongation requirements are superseded by this section.

(2) The minimum conductor elongation in the final wire must comply with the following limits when tested in accordance with ASTM E 8–91.

Conductor—AWG	Minimum Elongation—Percent
22	20
24	16

(3) Joints made in conductors during the manufacturing process may be brazed, using a silver alloy solder and nonacid flux, or they may be welded using either an electrical or cold welding technique. In joints made in uninsulated conductors, the two conductor ends must be butted. Splices made in insulated conductors need not be butted but may be joined in a manner acceptable to RUS.

(4)(i) The tensile strength of any section of a conductor containing a factory joint must not be less than 85 percent of the tensile strength of an adjacent section of the solid conductor of equal length without a joint.

(ii) *Engineering Information:* The sizes of wire used and their nominal diameters shall be as shown in the following table:

AWG	Nominal Diameter	
	Millimeters (mm)	(Inches (in.))
22	0.643	(0.0253)
24	0.511	(0.0201)

(5) Each conductor must be insulated with either a colored, solid, insulating grade, high density polyethylene or crystalline propylene/ethylene copolymer or with a solid natural primary layer and a colored, solid outer skin using one of the insulating materials listed in paragraphs (b)(5)(i) through (b)(5)(ii) of this section.

(i) The polyethylene raw material selected to meet the requirements of this section must be Type III, Class A, Category 4 or 5, Grade E9, in accordance with ASTM D 1248–84(1989).

(ii) The crystalline propylene/ethylene raw material selected to meet the requirements of this section must be Class PP 200B 40003 E11 in accordance with ASTM D 4101–82(1988).

(iii) Raw materials intended as conductor insulation furnished to these requirements must be free from dirt, metallic particles, and other foreign matter.

(iv) All insulating raw materials must be accepted by RUS prior to their use.

(6) All conductors in any single length of wire must be insulated with the same type of material.

(7) A permissible overall performance level of faults in conductor insulation must average not greater than one fault per 12,000 conductor meters (40,000 conductor feet) for each gauge of conductor.

(i) All insulated conductors must be continuously tested for insulation faults during the twinning operation with the method of test acceptable to RUS. The length count and number of faults must be recorded. The information must be retained for a period of 6 months and be available for review by RUS when requested.

(ii) The voltages for determining compliance with the requirements of this section are as follows:

AWG	Direct Current Voltages (Kilovolts)
22	6.0
24	5.0

(8) Repairs to the conductor insulation during manufacturing are permissible. The method of repair must be accepted by RUS prior to its use. The repaired insulation must be capable of meeting the relevant electrical requirements of this section.

(9) All repaired sections of insulation must be retested in the same manner as originally tested for compliance with paragraph (b)(7) of this section.

(10) Colored insulating material removed from or tested on the conductor, from a finished wire, must be capable of meeting the following performance requirements:

Property	Polyethylene	Crystalline Propylene/Ethylene Copolymer
Melt Flow Rate Percent increase from raw material, Maximum.		
<0.5 (Initial Melt Index).	50	—
0.5–2.00 (Initial Melt Index).	25	—

Property	Polyethylene	Crystalline Propylene/Ethylene Copolymer
≤5.0 (Initial Melt Index).	—	110
Tensile Strength—Minimum		
Megapascals (MPa).	16.5	21.0
(Pounds per Square Inch (psi)).	(2,400)	(3,000)
Ultimate Elongation		
Minimum, Percent.	300	300
Cold Bend		
Failures, Maximum.	0/10	0/10
Shrinkback		
Maximum, mm (in.).	10 (0.375)	10 (0.375)
Oxygen Induction Time		
Minimum, Minutes.	20	20

(11) *Testing procedures*. The procedures for testing the insulation samples for compliance with paragraph (b)(10) of this section must be as follows.

(i) *Melt flow rate*. The melt flow rate must be determined as described in ASTM D 1238–90b. Condition E must be used for polyethylene. Condition L must be used for crystalline propylene/ethylene copolymer. The melt flow test must be conducted prior to the filling operation.

(ii) *Tensile strength and ultimate elongation*. Samples of the insulation material, removed from the conductor, must be tested in accordance with ASTM D 4565–90a using the following conditions. The minimum length of unclamped specimen must be 50 mm (2.0 in.). The minimum speed of jaw separation must be 25 mm (1.0 in.) per minute per 25 mm (1.0 in.) of unclamped specimen. The temperature of specimens and surrounding shall be 23 ±1 °C.

NOTE: Quality assurance testing at a jaw separation speed of 500 mm/min (20 in./min) is permissible. Failures at this rate must be retested at the 50 mm/min (2 in./min) rate to determine section compliance.

(iii) *Cold bend*. Samples of the insulation material on the conductor must be tested in accordance with ASTM D 4565–90a at a temperature of −40 ±1 °C with a mandrel diameter equal to 3 times the outside diameter of the insulated conductor. There must be no cracks visible to normal or corrected-to-normal vision.

(iv) *Shrinkback*. Samples of insulation must be tested for four hours in accordance with ASTM D 4565–90a. The temperature for the type of material is listed as follows:

Material	Temperature
Polyethylene	115 ±1 °C
Crystalline propylene/ethylene Copolymer	130 ±1 °C

(v) *Oxygen induction time*. Samples of insulation, which have been conditioned in accordance with paragraph 17.3 of ASTM D 4565–90a, must be tested in accordance with the procedures of ASTM D 4565–90a using copper pans and a test temperature of 199 ±1 °C.

(12) Other methods of testing may be used if acceptable to RUS.

(c) *Identification of pairs and twisting of pairs*. (1) The insulation must be colored to identify:

(i) The tip and ring conductor of each pair; and

(ii) Each pair in the completed wire.

(2) The colors to be used to provide identification of the tip and ring conductor of each pair are shown in the following table:

Pair No.	Color	
	Tip	Ring
1	White	Blue
2	White	Orange
3	White	Green

(3) *Standards of color*. The colors of the insulated conductors supplied in accordance with this section are specified in terms of the Munsell Color System (ASTM D 1535–89) and must comply with the ''Table of Wire and Cable Limit Chips'' as defined in ANSI/EIA-359-A-84. (Visual color standards meeting these requirements may be obtained directly from the Munsell Color Company, Inc., 2441 North Calvert Street, Baltimore, Maryland 21218).

(4) Positive identification of the tip and ring conductors of each pair by marking each conductor of a pair with

the color of its mate is permissible. The method of marking must be accepted by RUS prior to its use.

(5) Other methods of providing positive identification of the tip and ring conductors of each pair may be employed if accepted by RUS prior to its use.

(6) The insulated conductors must be twisted into pairs.

(7) In order to provide sufficiently high crosstalk isolation, the pair twists must be designed to enable the wire to meet the capacitance unbalance and the crosstalk loss requirements of paragraphs (m)(2), (m)(3), and (m)(4) of this section.

(8) The average length of pair twists in any pair in the finished wire, when measured on any 3 meter (m) (10 foot(ft)) length, must not exceed 152 mm (6 in.).

(9) An alternative method of forming the two pair wire is the use of a star-quad configuration.

(i) The assembly of the star-quad must be such as to enable the wire to meet the capacitance unbalance and the crosstalk loss requirements of paragraphs (m)(2), (m)(3), and (m)(4) of this section.

(ii) The four individual insulated conductors must be twisted together to form a star-quad configuration with the tip and ring conductors of each pair diagonally opposite each other in the quad.

(iii) The average length of twist for the star-quad in the finished wire, when measured on any 3 m (10 ft) length, must not exceed 152 mm (6 in.).

(iv) The following color scheme must be used to provide identification of the tip and ring conductor of each pair in the star-quad:

Pair No.	Color	
	Tip	Ring
1	White with blue stripe.	Blue
2	White with orange stripe.	Orange

(v) If desired, the blue and orange conductors may contain a white stripe. The stripes in this case must be narrow enough so that the tip and ring identification is obvious.

(d) *Forming of the wire core.* (1) Twisted pairs or star-quad configuration must be assembled in such a way as to form a substantially cylindrical group.

(2) The filling compound must be applied to the wire core in such a way as to provide a completely filled core as is commercially practical.

(3) If desired for manufacturing reasons, white or colored binders of nonhygroscopic and nonwicking material may be applied over the core.

(e) *Filling compound.* (1) After or during the stranding operation and prior to application of the optional core wrap and inner jacket, a homogeneous filling compound free of agglomerates must be applied to the wire core. The compound must be as nearly colorless as is commercially feasible and consistent with the end product requirements and pair identification.

(2) The filling compound must be free from dirt, metallic particles, and other foreign matter. It must be applied in such a way as to fill the space within the wire core.

(3) The filling compound must be nontoxic and present no dermal hazards.

(4) The filling compound must exhibit the following dielectric properties at a temperature of 23 ±3 °C when measured in accordance with ASTM D 150–87 or ASTM D 4872–88.

(i) The dissipation factor must not exceed 0.0015 at a frequency of 1 megahertz (MHz).

(ii) The dielectric constant must not exceed 2.30.

(5) The volume resistivity must not be less than 10^{12} ohm-cm at a temperature of 23 ±3 °C when measured in accordance with ASTM D 257–91 or ASTM D 4872–88.

(6) The individual wire manufacturer must satisfy RUS that the filling compound selected for use is suitable for its intended application. The filling compound must be compatible with the wire components when tested in accordance with ASTM D 4568–86 at a temperature of 80 °C.

(f) *Core wrap (optional).* (1) When a core wrap is used, it must consist of a layer of nonhygroscopic and nonwicking dielectric material. The wrap must be applied with an overlap.

(2) The core wrap must provide a sufficient heat barrier to prevent visible evidence of conductor insulation deformation or adhesion between conductors, caused by adverse heat transfer during the inner jacketing operation.

(3) If required for manufacturing reasons, white or colored binders of nonhygroscopic and nonwicking material may be applied over the core wrap.

(4) Sufficient filling compound must be applied to the core wrap that voids or air spaces existing between the core and inner side of the core wrap are minimized.

(g) *Inner jacket*. (1) An inner jacket must be applied over the core and/or core wrap.

(2) The jacket must be free from holes, splits, blisters, or other imperfections and must be as smooth and concentric as is consistent with the best commercial practice.

(3) The inner jacket material and test requirements must be as specified for the outer jacket material per paragraphs (j)(3) through (j)(5)(iv) of this section.

(4) The inner jacket thickness at any point must not be less than 0.5 mm (0.020 in.). The thickness must be determined from measurements on 50 mm (2 in.) samples taken not less than 0.3 m (1 ft) from either end of the wire. The average must be determined from 4 readings taken approximately 90 °apart on any cross section of the samples. The maximum and minimum points must be determined by exploratory measurements. The maximum thickness minus the minimum thickness at any cross section must not exceed 43 percent of the average thickness at that cross section.

(h) *Flooding compound*. (1) Sufficient flooding compound must be applied on all sheath interfaces so that voids and air spaces in these areas are minimized.

(2) The flooding compound must be compatible with the jacket when tested in accordance with ASTM D 4568–86 at a temperature of 80 °C. The floodant must exhibit adhesive properties sufficient to prevent jacket slip when tested in accordance with the requirements of appendix A, paragraph (III)(5), of this section.

(3) The individual wire manufacturer must satisfy RUS that the flooding compound selected for use is acceptable for the application.

(i) *Shield*. (1) A shield must be applied either longitudinally or helically over the inner jacket.

(i) If the shield is applied longitudinally, it must be corrugated.

(ii) If the shield is applied helically, it must be smooth.

(2) The overlap for longitudinally applied shields must be a minimum of 2 mm (0.075 in.) The overlap for helically applied shields must be a minimum of 23 percent of the tape width.

(3) General requirements for application of the shielding material are as follows:

(i) Successive lengths of shielding tapes may be joined during the manufacturing process by means of cold weld, electric weld, soldering with a nonacid flux, or other acceptable means;

(ii) Where two ends of a metal shield are to be joined together, care shall be taken to clean the metal surfaces in order to provide for a good mechanical and electrical connection;

(iii) The shields of each length of wire must be tested for continuity. A one meter (3 ft) section of shield containing a factory joint must exhibit not more than 110 percent of the resistance of a shield of equal length without a joint;

(iv) The breaking strength of any section of a shield tape containing a factory joint must not be less than 80 percent of the breaking strength of an adjacent section of the shield of equal length without a joint;

(v) The reduction in thickness of the shielding material due to the corrugating or application process must be kept to a minimum and must not exceed 10 percent at any spot; and

(vi) The shielding material must be applied in such a manner as to enable the wire to pass the bend test as specified in paragraph (n)(3) of this section.

(4) The following materials are acceptable for use as wire shielding:

Standard Wire	Gopher Resistant Wire
Copper Alloy 220 (Bronze). (0.1016 ±0.0076 mm) ...	Copper-Clad Stainless Steel 0.1270 ±0.0127 mm

Standard Wire	Gopher Resistant Wire
(0.0040 ±0.0003 in.)	(0.0050 ±0.0005 in.)
Copper Alloy 220 (Bronze).	Copper Alloy 664
0.1270 ±0.0127 mm	0.1397 ±0.0127 mm
(0.0050 ±0.0005 in.)	(0.0055 ±0.0005 in.)
	Copper-Clad Alloy Steel 0.1270 ±0.0127 (0.0050 ±0.0005 in.)

(i) The copper-clad steels and copper alloy 664 shielding tapes must be capable of meeting the following performance requirements prior to application to the wire:

Property	Requirement
Tensile Strength Minimum, MPa (psi)	379 (55,000)
Tensile Yield Minimum, MPa (psi)	241 (35,000)
Elongation Minimum, percent in 50 mm (2 in.).	15

(ii) *Copper alloy 220*. The shielding material, prior to application to the wire, must be in the fully annealed condition and shall conform to the requirements of ASTM B 694–86 for C22000 commercial bronze.

(iii) *Copper-clad stainless steel*. In addition to meeting the requirements of paragraph (i)(4)(i) of this section, the shielding material, prior to application to the wire, must be in the fully annealed condition and must conform to the requirements of ASTM B 694–86, with a cladding ratio of 16/68/16 and must have a minimum electrical conductivity of 28 percent IACS when measured in accordance with ASTM B 193–87.

(iv) *Copper alloy 664*. In addition to meeting the requirements of paragraph (i)(4)(i) of this section, the shielding material, prior to application to the wire, must be annealed temper and must conform to the requirements of ASTM B 694–86 and must have a minimum electrical conductivity of 28 percent IACS when measured in accordance with ASTM B 193–87.

(v) *Copper-clad alloy steel*. In addition to meeting the requirements of paragraph (i)(4)(i) of this section, the shielding material, prior to application to the wire, must be in the fully annealed condition and the copper component must conform to the requirements of ASTM B 224–91 and the alloy steel component must conform to the requirements of ASTM A 505–87, with a cladding ratio of 16/68/16, and must have a minimum electrical conductivity of 28 percent IACS when measured in accordance with ASTM B 193–87.

(j) *Outer jacket*. (1) The outer jacket must provide the wire with a tough, flexible, protective covering which can withstand exposure to sunlight, to atmospheric temperatures and stresses reasonably expected in normal installation and service.

(2) The jacket must be free from holes, splits, blisters, or other imperfections and must be as smooth and concentric as is consistent with the best commercial practice.

(3) The raw material used for the outer jacket must be one of the five types listed in paragraphs (j)(3)(i) through (j)(3)(v) of this section. The raw material must contain an antioxidant to provide long term stabilization and the materials must contain a 2.60 ±0.25 percent concentration of furnace black to provide ultraviolet shielding. Both the antioxidant and furnace black must be compounded into the material by the raw material supplier.

(i) Low density, high molecular weight polyethylene (LDHMW) must conform to the requirements of ASTM D 1248–84(1989), Type I, Class C, Category 4 or 5, Grade J3.

(ii) Low density, high molecular weight ethylene copolymer (LDHMW) must conform to the requirements of ASTM D 1248–84 (1989), Type I, Class C, Category 4 or 5, Grade J3.

(iii) Linear low density, high molecular weight polyethylene (LLDHMW) must conform to the requirements of ASTM D 1248–84(1989), Type I, Class C, Category 4 or 5, Grade J3.

(iv) High density polyethylene (HD) must conform to the requirements of ASTM D 1248–84(1989), Type III, Class C, Category 4 or 5, Grade J4.

(v) Medium density polyethylene (MD) must conform to the requirements of ASTM D 1248–84(1989), Type II, Class C, Category 4 or 5, Grade J4.

(vi) Particle size of the carbon selected for use must not average greater than 20 nanometers.

(vii) Absorption coefficient must be a minimum of 400 in accordance with the procedures of ASTM D 3349–86.

(4) The outer jacketing material removed from or tested on the wire must be capable of meeting the following performance requirements:

Property	LLDHMW, Ethylene Copolymer	LDHMW Polyethylene	HD or MD Polyethylene
Melt Flow Rate Percent increase from raw material Maximum		50	50
<0.41 (Initial Melt Index)	100	—	—
0.41–2.00 (Initial Melt Index)	50	—	—
Tensile Strength Minimum, MPa (psi)	12.0 (1,700)	12.0 (1,700)	16.5 (2,400)
Ultimate Elongation Percent, Minimum	400	400	300
Shrinkback Percent of Length, Maximum	5	5	5
Impact Failures, Maximum	2/10	2/10	2/10

(5) *Testing procedures*. The procedures for testing the jacket samples for compliance with paragraph (j)(4) of this section must be as follows:

(i) *Melt flow rate*. The melt flow rate must be as determined by ASTM D 1238–90b, Condition E. Jacketing material must be free from flooding and filling compound.

(ii) *Tensile strength and ultimate elongation*. Test in accordance with ASTM D 4565–90a, using a jaw separation speed of 500 mm/min (20 in./min) for low density material and 50 mm/min (2 in./min) for high and medium density materials.

(iii) *Shrinkback*. Test in accordance with the procedures specified in ASTM D 4565–90a using a test temperature of 100 ±1 °C for low density material and a test temperature of 115 ±1 °C for high and medium density materials.

(iv) *Impact*. The test must be performed in accordance with ASTM D 4565–90a using an impact force of 4 newton-meter (3 pound force-foot) at a temperature of −20 ±2 °C. The cylinder must strike the sample at the shield overlap. A crack or split in the jacket constitutes failure.

(6) *Jacket thickness*. The minimum jacket thickness must be 0.64 mm (0.025 in.) except that the minimum thickness over the sheath slitting cord, if present, must be 0.46 mm (0.018 in.). The minimum point must be determined by exploratory measurements. The average thickness at any cross section must be determined from four readings including the minimum point, taken approximately 90 °apart. The thickness measurement must exclude any jacket material that has formed into the corrugation. The maximum thickness at any cross section must not be greater than 155 percent of the minimum thickness.

(7) *Eccentricity*. The eccentricity of the jacket must not exceed 43 percent when calculated using the formula as follows:

$$\frac{\text{Maximum Thickness} - \text{Minimum Thickness}}{\text{Average Thickness}} \times 100 \text{ Percent}$$

(k) *Sheath slitting cord (optional)*. (1) Sheath slitting cords may be used in the wire structure at the option of the manufacturer.

(2) When a sheath slitting cord is used it must be nonhygroscopic and nonwicking, continuous throughout a length of wire, and of sufficient strength to open the sheath without breaking the cord.

(3) Sheath slitting cords must be capable of consistently slitting the jacket(s) and/or shield for a continuous length of 0.6 m (2 ft) when tested in accordance with the procedure specified in appendix B of this section.

(l) *Identification marker and length marker*. (1) Each length of wire must be permanently identified as to manufacturer and year of manufacture.

(2) The number of conductor pairs and their gauge size must be marked on the jacket.

(3) The marking must be printed on the jacket at regular intervals of not more than 1.5 m (5 ft).

(4) An alternative method of marking may be used if accepted by RUS prior to its use.

(5) The completed wire must have sequentially numbered length markers in FEET OR METERS at regular intervals of not more than 1.5 m (5 ft) along the outside of the jacket.

(6) The method of length marking must be such that for any single length of wire, continuous sequential numbering must be employed.

(7) The numbers must be dimensioned and spaced to produce good legibility and must be approximately 3 mm (0.125 in.) in height. An occasional illegible marking is permissible if there is a legible marking located not more than 1.5 m (5 ft) from it.

(8) The method of marking must be by means of suitable surface markings producing a clear, distinguishable, contrasting marking acceptable to RUS. Where direct or transverse printing is employed, the characters should be indented to produce greater durability of marking. Any other method of length marking must be acceptable to RUS as producing a marker suitable for the field. Size, shape and spacing of numbers, durability, and overall legibility of the marker will be considered in acceptance of the method.

(9) The accuracy of the length marking must be such that the actual length of any wire section is never less than the length indicated by the marking and never more than one percent greater than the length indicated by the marking.

(10) The color of the initial marking must be white or silver. If the initial marking fails to meet the requirements of the preceding paragraphs, it will be permissible to either remove the defective marking and re-mark with the white or silver color or leave the defective marking on the wire and re-mark with yellow. No further re-marking is permitted. Any re-marking must be on a different portion of the wire circumference than any existing marking when possible and have a numbering sequence differing from any other existing marking by at least 5,000.

(11) Any reel of wire which contains more than one set of sequential markings must be labeled to indicate the color and sequence of marking to be used. The labeling must be applied to the reel and also to the wire.

(m) *Electrical requirements*—(1) *Mutual capacitance and conductance.* (i) The average mutual capacitance (corrected for length) of all pairs in any reel must not exceed 52 ±4 nanofarad/ kilometer (nF/km) (83 ±7 nanofarad/mile (nF/mile)) when tested in accordance with ASTM D 4566–90 at a frequency of 1.0 ±0.1 kilohertz (kHz) and a temperature of 23 ±3 °C.

(ii) The mutual conductance (corrected for length and gauge) of any pair must not exceed 2 micromhos/kilometer (micromhos/km) (3.3 micromhos/mile) when tested in accordance with ASTM D 4566–90 at a frequency of 1.0 ±0.1 kHz and a temperature of 23 ±3 °C.

(2) *Pair-to-pair capacitance unbalance.* The capacitance unbalance between any pair of the completed wire must not exceed 145 picofarad/kilometer (pF/km) (80 picofarad/1000 ft (pF/1000 ft)) when tested in accordance with ASTM D 4566–90 at a frequency of 1.0 ±0.1 kHz and a temperature of 23 ±3 °C.

(3) *Pair-to-ground capacitance unbalance*—(i) *Pair-to-ground.* The capacitance unbalance as measured on the individual pairs of the completed wire must not exceed 2625 pF/km (800 pF/1000 ft) when tested in accordance with ASTM D 4566–90 at a frequency of 1.0 ±0.1 kHz and a temperature of 23 ±3 °C.

(ii) When measuring pair-to-ground capacitance unbalance, all pairs, except the pair under test, are grounded to the shield.

(iii) Pair-to-ground capacitance unbalance may vary directly with the length of the wire.

(4) *Far-end crosstalk loss.* (i) The output-to-outputfar-end crosstalk loss (FEXT) between any pair combination of a completed wire when measured in accordance with ASTM D 4566–90 at a test frequency of 150 kHz must not be less than 58 decibel/ kilometer (dB/km) (63 decibel/1000 ft). If the loss K_o at a frequency F_o for length L_o is known, then K_x can be determined for any other frequency F_x or length L_x by:

$$\text{FEXT loss}\,(K_X) = K_O - 20\log 10\,\frac{F_X}{F_O} - 10\log 10\,\frac{L_X}{L_O}$$

(5) *Attenuation*. The attenuation of any individual pair on any reel of wire must not exceed the following limits when measured at or corrected to a temperature of 20 ±1 °C and a test frequency of 150 kHz. The test must be conducted in accordance with ASTM D 4566–90.

Conductor AWG	Individual Pair Attenuation dB/km (decibel/mile (dB/mile))	
	Maximum	Minimum
22	6.8 (11.0)	5.0 (8.1)
24	8.7 (14.0)	6.6 (10.7)

(6) *Insulation resistance*. Each insulated conductor in each length of completed wire, when measured with all other insulated conductors and the shield grounded, must have an insulation resistance of not less than 1600 megohm-kilometer (1000 megohm-mile) at 20 ±1 °C. The measurement must be made in accordance with the procedures of ASTM D 4566–90.

(7) *High voltage test*. (i) In each length of completed wire, the insulation between conductors when tested in accordance with ASTM D 4566–90 must withstand for 3 seconds a direct current (dc) potential whose value is not less than:

(A) 5.0 kilovolts for 22-gauge conductors; and

(B) 4.0 kilovolts for 24-gauge conductors.

(ii) In each length of completed wire, the dielectric strength between the shield and all conductors in the core must be tested in accordance with ASTM D 4566–90 and must withstand, for 3 seconds, a dc potential whose value is not less than 20 kilovolts.

(8) *Conductor resistance*. The dc resistance of any conductor must be measured in the completed wire in accordance with ASTM D 4566–90 and must not exceed the following values when measured at or corrected to a temperature of 20 ±1 °C.

AWG	Maximum Resistance	
	ohms/kilometer	(ohms/1000 ft)
22	57.1	(17.4)
24	90.2	(27.5)

(9) *Resistance unbalance*. (i) The difference in dc resistance between the two conductors of any pair in the completed wire must not exceed 5.0 percent when measured in accordance with the procedures of ASTM D 4566–90.

(ii) The resistance unbalance between tip and ring conductors shall be random with respect to the direction of unbalance. That is, the resistance of the tip conductors shall not be consistently higher with respect to the ring conductors and vice versa.

(n) *Mechanical requirements*—(1) *Defective wire*. Pairs in each length of wire will not be permitted to have either a ground, cross, short or open circuit condition.

(2) *Wire breaking strength*. The breaking strength of the completed wire must not be less than 890 newtons (200 pound-force) when tested in accordance with ASTM D 4565–90a using a jaw separation speed of 25 mm/min (1.0 in./min).

(3) *Wire bending test*. The completed wire must be capable of meeting the requirements of ASTM D 4565–90a after conditioning at −20 ±2 °C and at 23 ±2 °C.

(4) *Water penetration test*. (i) A one meter (3 ft) length of completed wire must be stabilized at 23 ±2 °C and tested in accordance with ASTM D 4565–90a using a one meter (3 ft) water head over the sample or placed under the equivalent continuous pressure for one hour.

(ii) After the one hour period, there must be no water leakage in the sheath interfaces, under the core wrap or between any insulated conductors in the core.

(iii) If water leakage is detected in the first sample, one 3 m (10 ft) additional adjacent sample from the same reel of wire must be tested in accordance with paragraph (n)(4)(ii) of this section. If the second sample exhibits water leakage, the entire reel of wire is to be rejected. If the second sample exhibits no leakage, the entire reel of wire is considered acceptable.

(5) *Compound flow test*. The completed wire must be capable of meeting the compound flow test specified in ASTM D 4565–90a when exposed for a period of 24 hours at a temperature of 80 ±1 °C. At the end of this test period, there must be no evidence of flowing or dripping of compound from either the core or sheath interfaces.

(o) *Acceptance testing and extent of testing*. (1) The tests described in appendix A of this section are intended for acceptance of wire designs and major modifications of accepted designs. RUS decides what constitutes a major modification. These tests are intended to show the inherent capability of the manufacturer to produce wire products having long life and stability.

(2) For initial acceptance, the manufacturer must submit:

(i) An original signature certification that the product fully complies with each requirement of this section;

(ii) Qualification Test Data, per appendix A of this section;

(iii) To periodic plant inspections;

(iv) A certification that the product does or does not comply with the domestic origin manufacturing provisions of the ''Buy American'' requirements of the Rural Electrification Act of 1938 (7 U.S.C. 901 *et seq.*);

(v) Written user testimonials concerning performance of the product; and

(vi) Other nonproprietary data deemed necessary by the Chief, Outside Plant Branch (Telephone).

(3) For requalification acceptance, the manufacturer must submit an original signature certification that the product fully complies with each section of the specification, excluding the Qualification Section, and a certification that the product does or does not comply with the domestic origin manufacturing provisions of the ''Buy American'' requirements of the Rural Electrification Act of 1938 (7 U.S.C. 901 *et seq.*) for acceptance by June 30 every three years. The required data and certification must have been gathered within 90 days of the submission.

(4) Initial and requalification acceptance requests should be addressed to: Chairman, Technical Standards, Committee ''A'' (Telephone), Telecommunications Standards Division, Rural Utilities Service, Washington, DC 20250–1500.

(5) Tests on 100 percent of completed wire. (i) The shield of each length of wire must be tested for continuity using the procedures of ASTM D 4566–90.

(ii) Dielectric strength between all conductors and the shield must be tested to determine freedom from grounds in accordance with paragraph (m)(7)(ii) of this section.

(iii) Each conductor in the completed wire must be tested for continuity using the procedures of ASTM D 4566–90.

(iv) Dielectric strength between conductors must be tested to ensure freedom from shorts and crosses in accordance with paragraph (m)(7)(i) of this section.

(v) The average mutual capacitance must be measured on all wires.

(6) *Capability tests*. Tests on a quality assurance basis must be made as frequently as is required for each manufacturer to determine and maintain compliance with:

(i) Performance requirements for conductor insulation and jacket material;

(ii) Performance requirements for filling and flooding compounds;

(iii) Sequential marking and lettering;

(iv) Capacitance unbalance and crosstalk;

(v) Insulation resistance;

(vi) Conductor resistance and resistance unbalance;

(vii) Wire bending and wire breaking strength tests;

(viii) Mutual conductance and attenuation; and

(ix) Water penetration and compound flow tests.

(p) *Summary of records of electrical and physical tests*. (1) Each manufacturer must maintain suitable summary of records for a period of at least 3 years for all electrical and physical tests required on completed wire by this section as set forth in paragraphs (o)(5) and (o)(6) of this section. The test data for a particular reel shall be in a form that it may be readily available to the purchaser or to RUS upon request.

(2) Measurements and computed values must be rounded off to the number

of places of figures specified for the requirement according to ASTM E 29–90.

(q) *Manufacturing irregularities.* (1) Repairs to the inner jacket and shield are not permitted in wire supplied to the end user under this section.

(2) Minor defects in the outer jackets (defects having a dimension of 3 mm (0.125 in.) or less in any direction) may be repaired by means of heat fusing in accordance with good commercial practices utilizing sheath grade compound.

(r) *Preparation for shipment.* (1) The wire must be shipped on reels. The diameter of the drum must be large enough to prevent damage to the wire from reeling or unreeling. The reels must be substantial and so constructed as to prevent damage to the wire during shipment and handling.

(2) The thermal wrap must comply with the requirements of appendix C of this section. When a thermal reel wrap is supplied, the wrap must be applied to the reel and must be suitably secured in place to minimize thermal exposure to the wire during storage and shipment. The use of the thermal reel wrap as a means of reel protection will be at the option of the manufacturer unless specified by the end user.

(3) The outer end of the wire must be securely fastened to the reel head so as to prevent the wire from becoming loose in transit. The inner end of the wire must be securely fastened in such a way as to make it readily available if required for electrical testing. Spikes, staples, or other fastening devices which penetrate the wire jacket must not be used. The method of fastening the wire ends must be accepted by RUS prior to it being used.

(4) Each length of wire must be wound on a separate reel unless otherwise specified or agreed to by the purchaser.

(5) Each reel must be plainly marked to indicate the direction in which it should be rolled to prevent loosening of the wire on the reel.

(6) Each reel must be stenciled or labeled on either one or both sides with the name of the manufacturer, year of manufacture, actual shipping length, an inner and outer end sequential length marking, description of the wire, reel number and the RUS wire designation:

Wire Designation
BFW
Wire Construction
Pair Count
Conductor Gauge
N = Copper Alloy 220 (Bronze) Shield
Y = Gopher Resistant Shields

Example: BFWY 3–24

Buried Filled Wire, Gopher Resistant Shield, 3 pair, 24 AWG

(7) Both ends of the filled buried wire, manufactured to the requirements of this section, must be equipped with end caps which are acceptable to RUS.

(The information and recordkeeping requirements of this section have been approved by the Office of Management and Budget (OMB) under the control number 0572–0059)

APPENDIX A TO § 1755.860—QUALIFICATION TEST METHODS

(I) The test procedures described in this appendix are for qualification of initial designs and major modifications of accepted designs. Included in (V) of this appendix are suggested formats that may be used in submitting test results to RUS.

(II) *Sample Selection and Preparation.* (1) All testing must be performed on lengths removed sequentially from the same 3 pair, 22 gauge jacketed wire. This wire must not have been exposed to temperatures in excess of 38 °C since its initial cool down after sheathing. The lengths specified are minimum lengths and if desirable from a laboratory testing standpoint longer lengths may be used.

(a) Length A shall be 10 ±0.2 meters (33 ±0.5 feet) long and must be maintained at 23 ±3 °C. One length is required.

(b) Length B shall be 12 ±0.2 meters (40 ±0.5 feet) long. Prepare the test sample by removing the inner and outer jacket, shield, and core wrap, if present, for a sufficient distance on both ends to allow the insulated conductors to be flared out. Remove sufficient conductor insulation so that appropriate electrical test connections can be made at both ends. Coil the specimen with a diameter of 15 to 20 times its sheath diameter. Three lengths are required.

(c) Length C shall be one meter (3 feet) long. Four lengths are required.

(d) Length D shall be 300 millimeters (1 foot) long. Four lengths are required.

(e) Length E shall be 600 millimeters (2 feet) long. Four lengths are required.

(f) Length F shall be 3 meters (10 feet) long and must be maintained at 23 ±3 °C for the duration of the test. Two lengths are required.

(2) *Data Reference Temperature.* Unless otherwise specified, all measurements shall be made at 23 ±3 °C.

(III) *Environmental Tests*—(1) *Heat Aging Test*—(a) *Test Samples*. Place one sample each of lengths B, C, D, and E in an oven or environmental chamber. The ends of sample B must exit from the chamber or oven for electrical tests. Securely seal the oven exit holes.

(b) *Sequence of Tests*. After conditioning the samples are to be subjected to the following tests:

(i) Water Immersion Test outlined in (III)(2) of this appendix;

(ii) Water Penetration Test outlined in (III)(3) of this appendix; .

(iii) Insulation Compression Test outlined in (III)(4) of this appendix; and

(iv) Jacket Slip Strength Test outlined in (III)(5) of this appendix.

(c) *Initial Measurements*. (i) For sample B, measure the open circuit capacitance and conductance for each pair at 1 and 150 kilohertz and the attenuation at 150 kilohertz after conditioning the sample at the data reference temperature for 24 hours. Calculate the average and standard deviation for the data of the 3 pairs on a per kilometer (per mile) basis.

(ii) The attenuation at 150 kilohertz may be calculated from open circuit admittance (Yoc) and short circuit impedance (Zsc) or may be obtained by direct measurement of attenuation.

(iii) Record on suggested formats attached in (V) of this appendix or on other easily readable formats.

(d) *Heat Conditioning*. (i) Immediately after completing the initial measurements, condition the sample for 14 days at a temperature of 65 ±2 °C.

(ii) At the end of this period note any exudation of filling compound. Measure and calculate the parameters given in (III)(1)(c) of this appendix. Record on suggested formats attached in (V) of this appendix or on other easily readable formats.

(iii) Cut away and discard a one meter (3 foot) section from each end of length B.

(e) *Overall Electrical Deviation*. (i) Calculate the percent change in all average parameters between the final parameters after conditioning with the initial parameters in (III)(1)(c) of this appendix.

(ii) The stability of the electrical parameters after completion of this test must be within the following prescribed limits:

(A) *Capacitance*. The average mutual capacitance must be within 5 percent of its original value;

(B) The change in average mutual capacitance must be less than 5 percent over the frequency range of 1 to 150 kilohertz;

(C) *Conductance*. The average mutual conductance must not exceed 2 micromhos/kilometer (3.3 micromhos/mile) at a frequency of 1 kilohertz; and

(D) *Attenuation*. The attenuation must not have increased by more than 5 percent over its original value.

(2) *Water Immersion Electrical Test*—(a) *Test Sample Selection*. The 10 meter (33 foot) section of length B must be tested.

(b) *Test Sample Preparation*. Prepare the sample by removing the inner and outer jacket, shield, and core wrap, if present, for a sufficient distance to allow one end to be accessed for test connections. Cut out a series of 2.5 millimeter by 13 millimeter (0.1 inch by 0.5 inch) rectangular slots along the test sample, at 300 millimeter (1 foot) intervals progressing successively 90 degrees around the circumference of the wire. Assure that the wire core is exposed at each slot by slitting the inner jacket and core wrap if present. Place the prepared sample in a dry vessel which when filled will maintain a one meter (3 foot) head of water over 6 meters (20 feet) of uncoiled wire. Extend and fasten the ends of the wire so they will be above the water line and the pairs are rigidly held for the duration of the test.

(c) *Capacitance and Conductance Testing*. Measure the initial values of mutual capacitance and conductance of all pairs in each wire at a frequency of 1 kilohertz before filling the vessel with water. Be sure the wire shield is grounded to the test equipment. Fill the vessel until there is a one meter (3 foot) head of water on the wires.

(i) Remeasure the mutual capacitance and conductance after the wires have been submerged for 24 hours and again after 30 days.

(ii) Record each sample separately on the suggested formats attached in (V) of this appendix or on other easily readable formats.

(d) *Overall Electrical Deviation*. (i) Calculate the percent change in all average parameters between the final parameters after conditioning with the initial parameters in (III)(2)(c) of this appendix.

(ii) The stability of the electrical parameters after of the test must be within the following prescribed limits:

(A) *Capacitance*. The average mutual capacitance must be within 5 percent of its original value; and

(B) *Conductance*. The average mutual conductance must not exceed 2 micromhos/kilometer (3.3 micromhos/mile) at a frequency of 1 kilohertz.

(3) *Water Penetration Testing*. (a) A watertight closure must be placed over the jacket of length C. The closure must not be placed over the jacket so tightly that the flow of water through preexisting voids or air spaces is restricted. The other end of the sample must remain open.

(b) Test per Option A or Option B. (i) *Option A*. Weigh the sample and closure prior to testing. Fill the closure with water and place under a continuous pressure of 10 ±0.7 kilopascals (1.5 ±0.1 pounds per square inch

gauge) for one hour. Collect the water leakage from the end of the test sample during the test and weigh to the nearest 0.1 gram. Immediately after the one hour test, seal the ends of the wire with a thin layer of grease and remove all visible water from the closure, being careful not to remove water that penetrated into the core during the test. Reweigh the sample and determine the weight of water that penetrated into the core. The weight of water that penetrated into the core must not exceed 1 gram.

(ii) *Option B*. Fill the closure with a 0.2 gram sodium fluorscein per liter water solution and apply a continuous pressure of 10 ±0.7 kilopascals (1.5 ±0.1 pounds per square inch gauge) for one hour. Catch and weigh any water that leaks from the end of the wire during the one hour period. If no water leaks from the sample, carefully remove the water from the closure. Then carefully remove the outer jacket, shield, inner jacket and core wrap, if present, one at a time, examining with an ultraviolet light source for water penetration. After removal of the inner jacket and core wrap, if present, carefully dissect the core and examine for water penetration within the core. Where water penetration is observed, measure the penetration distance. The distance of water penetration into the core must not exceed 127 millimeters (5.0 inches).

(4) *Insulation Compression Test*. (a) *Test Sample D*. Remove inner and outer jacket, shield, and core wrap, if present, being careful not to damage the conductor insulation. Remove one pair from the core and carefully separate, wipe off core filler and straighten the insulated conductors. Retwist the two insulated conductors together under sufficient tension to form 10 evenly spaced 360 degree twists in a length of 100 millimeters (4 inches).

(b) *Sample Testing*. Center the mid 50 millimeters (2 inches) of the twisted pair between two smooth rigid parallel metal plates measuring 50 millimeters (2 inches) in length or diameter. Apply a 1.5 volt direct current potential between the conductors, using a light or buzzer to indicate electrical contact between the conductors. Apply a constant load of 67 newtons (15 pound-force) on the sample for one minute and monitor for evidence of contact between the conductors. Record results on suggested formats attached in (V) of this appendix or on other easily readable formats.

(5) *Jacket Slip Strength Test*—(a) *Sample Selection*. Test sample E from (III)(1)(a) of this appendix.

(b) *Sample Preparation*. Prepare test sample in accordance with the procedures specified in ASTM D 4565–90a.

(c) *Sample Conditioning and Testing*. Remove the sample from the tensile tester prior to testing and condition for one hour at 50 ±2 °C. Test immediately in accordance with the procedure specified in ASTM D 4565–90a. A minimum outer jacket slip strength of 67 newtons (15 pound-force) is required. Record the load attained.

(6) *Humidity Exposure*. (a) Repeat steps (III)(1)(a) through (III)(1)(c)(iii) of this appendix for separate set of samples B, C, D and E which have not been subjected to prior environmental conditioning.

(b) Immediately after completing the measurements, expose the test sample to 100 temperature cyclings. Relative humidity within the chamber must be maintained at 90 ±2 percent. One cycle consists of beginning at a stabilized chamber and test sample temperature of 52 ±1 °C, increasing the temperature to 57 ±1 °C, allowing the chamber and test samples to stabilize at this level, then dropping the temperature back to 52 ±1 °C.

(c) Repeat steps (III)(1)(d)(ii) through (III)(5)(c) of this appendix.

(7) *Temperature Cycling*. (a) Repeat steps (III)(1)(a) through (III)(1)(c)(iii) of this appendix for separate set of samples B, C, D and E which have not been subjected to prior environmental conditioning.

(b) Immediately after completing the measurements, subject the test sample to 10 cycles of temperature between −40 °C and +60 °C. The test sample must be held at each temperature extreme for a minimum of 1 1/2 hours during each cycle of temperature. The air within the temperature cycling chamber must be circulated throughout the duration of the cycling.

(c) Repeat steps (III)(1)(d)(ii) through (III)(5)(c) of this appendix.

(IV) *Control Sample*—(1) *Test Samples*. A separate set of lengths for samples A, C, D, and E must have been maintained at 23 ±3 °C for at least 48 hours before the testing.

(2) Repeat steps (III)(2) through (III)(5)(c) of this appendix except use length A instead of length B.

(3) *Surge Test*. (a) One length of sample F must be used to measure the breakdown between conductors while the other length of F must be used to measure core to shield breakdown.

(b) The samples must be capable of withstanding, without damage, a single surge voltage of 20 kilovolts peak between conductors, and 35 kilovolts peak between conductors and the shield as hereinafter described. The surge voltage must be developed from a capacitor discharge through a forming resistor connected in parallel with the dielectric of the test sample. The surge generator constants must be such as to produce a surge of 1.5 × 40 microseconds wave shape.

(c) The shape of the generated wave must be determined at a reduced voltage by connecting an oscilloscope across the forming resistor with the wire sample connected in parallel with the forming resistor. The capacitor bank is charged to the test voltage

and then discharged through the forming resistor and test sample. The test sample will be considered to have passed the test if there is no distinct change in the wave shape obtained with the initial reduced voltage compared to that obtained after the application of the test voltage.

(V) The following suggested formats may be used in submitting the test results to RUS:

ENVIRONMENTAL CONDITIONING _____

FREQUENCY 1 KILOHERTZ

PAIR NUMBER	CAPACITANCE		CONDUCTANCE	
	nF/km	(nF/mile)	micromhos/km	(micromhos/mile)
	Initial	Final	Initial	Final
1	_____	_____	_____	_____
2	_____	_____	_____	_____
3	_____	_____	_____	_____
Average x̄	_____	_____	_____	_____

Overall Percent Difference in Average x̄ Capacitance:_____ Conductance: _____

ENVIRONMENTAL CONDITIONING _____

FREQUENCY 150 KILOHERTZ

PAIR NUMBER	CAPACITANCE		CONDUCTANCE		ATTENUATION	
	nF/km	(nF/mile)	micromhos/km	(micromhos/mile)	dB/km	(dB/mile)
	Initial	Final	Initial	Final	Initial	Final
1	_____	_____	_____	_____	_____	_____
2	_____	_____	_____	_____	_____	_____
3	_____	_____	_____	_____	_____	_____
Average x̄	_____	_____	_____	_____	_____	_____

Overall Percent Difference in Average x̄ Capacitance:_____ Conductance: _____ Attenuation:_____

ENVIRONMENTAL CONDITIONING _____

WATER IMMERSION TEST (1 KILOHERTZ)

PAIR NUMBER	CAPACITANCE			CONDUCTANCE		
	nF/km	(nF/mile)		micromhos/km	(micromhos/mile)	
	Initial	24 hours	Final	Initial	24 hours	Final
1	_____	_____	_____	_____	_____	_____
2	_____	_____	_____	_____	_____	_____
3	_____	_____	_____	_____	_____	_____
Average x̄	_____	_____	_____	_____	_____	_____

Overall Percent Difference in Average x̄ Capacitance:_____ Conductance: _____

WATER PENETRATION TEST

	Option A		Option B	
	End Leakage grams	Weight Gain grams	End Leakage grams	Penetration mm (in.)
Control	_____	_____	_____	_____
Heat Age	_____	_____	_____	_____
Humidity Exposure	_____	_____	_____	_____

WATER PENETRATION TEST—Continued

	Option A		Option B	
	End Leakage grams	Weight Gain grams	End Leakage grams	Penetration mm (in.)
Temperature Cycling.	_____	_____	_____	_____

INSULATION COMPRESSION

	Failures
Control	_____
Heat Age	_____
Humidity Exposure	_____
Temperature Cycling	_____

JACKET SLIP STRENGTH @ 50 °C

	Load in newtons (pound-force)
Control	_____
Heat Age	_____
Humidity Exposure	_____
Temperature Cycling	_____

FILLER EXUDATION (GRAMS)

Heat Age	_____
Humidity Exposure	_____
Temperature Cycle	_____

SURGE TEST (KILOVOLTS)

Conductor to Conductor	_____
Shield to Conductors	_____

APPENDIX B TO § 1755.860—SHEATH SLITTING CORD QUALIFICATION

(I) The test procedures described in this appendix are for qualification of initial and subsequent changes in sheath slitting cords.

(II) *Sample Selection*. All testing must be performed on two 1.2 meters (4 feet) lengths of wire removed sequentially from the same 3 pair, 22 gauge jacketed wire. This wire must not have been exposed to temperatures in excess of 38 °C since its initial cool down after sheathing.

(III) *Test Procedure*. (1) Using a suitable tool, expose enough of sheath slitting cord to permit grasping with needle nose pliers.

(2) The prepared test specimens must be maintained at a temperature of 23 ±1 °C for at least 4 hours immediately prior to and during the test.

(3) Wrap the sheath slitting cord around the plier jaws to ensure a good grip.

(4) Grasp and hold the wire in a convenient position while gently and firmly pulling the sheath slitting cord longitudinally in the direction away from the wire end. The angle of pull may vary to any convenient and functional degree. A small starting notch is permissible.

(5) The sheath slitting cord is considered acceptable if the cord can slit the jacket and/or shield for a continuous length of 0.6 meter (2 feet) without breaking the cord.

APPENDIX C TO § 1755.860—THERMAL REEL WRAP QUALIFICATION

(I) The test procedures described in this appendix are for qualification of initial and subsequent changes in thermal reel wraps.

(II) *Sample Selection*. All testing must be performed on two 450 millimeter (18 inch) lengths of wire removed sequentially from the same 3 pair, 22 gauge jacketed wire. This wire must not have been exposed to temperatures in excess of 38 °C since its initial cool down after sheathing.

(III) *Test Procedure*. (1) Place the two samples on an insulating material such as wood, etc.

(2) Tape thermocouples to the jackets of each sample to measure the jacket temperature.

(3) Cover one sample with the thermal reel wrap.

(4) Expose the samples to a radiant heat source capable of heating the uncovered jacket sample to a minimum of 71 °C. A 600 watt photoflood lamp or an equivalent lamp having the light spectrum approximately that of the sun shall be used.

(5) The height of the lamp above the jacket shall be 380 millimeters (15 inches) or a height that produces the 71 °C jacket temperature on the unwrapped sample.

(6) After the samples have stabilized at the temperature, the jacket temperatures of the samples must be recorded after one hour of exposure to the heat source.

(7) Compute the temperature difference between the jackets.

(8) For the thermal reel wrap to be acceptable to RUS, the temperature differences between the jacket with the thermal reel wrap

and the jacket without the reel wrap must be greater than or equal to 17 °C.

[58 FR 61004, Nov. 19, 1993, as amended at 60 FR 1711, Jan. 5, 1995; 69 FR 18803, Apr. 9, 2004]

§§ 1755.861–1755.869 [Reserved]

§ 1755.870 RUS specification for terminating cables.

(a) *Scope*. (1) This section establishes the requirements for terminating cables used to connect incoming outside plant cables to the vertical side of the main distributing frame in a telephone central office.

(i) The conductors are solid tinned copper, individually insulated with extruded solid dual insulating compounds.

(ii) The insulated conductors are twisted into pairs which are then stranded or oscillated to form a cylindrical core.

(iii) The cable structure is completed by the application of a core wrap, a shield, and a polyvinyl chloride jacket.

(2) The number of pairs and gauge size of conductors which are used within the RUS program are provided in the following table:

American Wire Gauge (AWG)	22	24
Number of Pairs	12	12
	50	50
	100	100
	200	200
	300	300
	400	400
	600	600
	800	800

NOTE: Cables larger in pair sizes from those shown in this table shall meet all the requirements of this section.

(3) All cables sold to RUS borrowers for projects involving RUS loan funds under this section must be accepted by RUS Technical Standards Committee ''A'' (Telephone). For cables manufactured to the specification of this section, all design changes to an accepted design must be submitted for acceptance. RUS will be the sole authority on what constitutes a design change.

(4) Materials, manufacturing techniques, or cable designs not specifically addressed by this section may be allowed if accepted by RUS. Justification for acceptance of modified materials, manufacturing techniques, or cable designs shall be provided to substantiate product utility and long term stability and endurance.

(5) The American National Standard Institute/Electronic Industries Association (ANSI/EIA) 359–A–84, EIA Standard Colors for Color Identification and Coding, referenced in this section is incorporated by reference by RUS. This incorporation by reference was approved by the Director of the Federal Register in accordance with 5 U.S.C. 552(a) and 1 CFR part 51. Copies of ANSI/EIA 359–A–84 are available for inspection during normal business hours at RUS, room 2845, U.S. Department of Agriculture, Washington, DC 20250–1500, or at the National Archives and Records Administration (NARA). For information on the availability of this material at NARA, call 202–741–6030, or go to: *http://www.archives.gov/federal_register/code_of_federal_regulations/ibr_locations.html*. Copies are available from Global Engineering Documents, 15 Inverness Way East, Englewood, CO 80112, telephone number (303) 792–2181.

(6) American Society for Testing and Materials Specifications (ASTM) B 33–91, Standard Specification for Tinned Soft or Annealed Copper Wire for Electrical Purposes; ASTM B 736–92a Standard Specification for Aluminum, Aluminum Alloy and Aluminum-Clad Steel Cable Shielding Stock; ASTM D 1248–84 (1989), Standard Specification for Polyethylene Plastics Molding and Extrusion Materials; ASTM D 1535–89, Standard Test Method for Specifying Color by the Munsell System; ASTM D 2287–81 (Reapproved 1988), Standard Specification for Nonrigid Vinyl Chloride Polymer and Copolymer Molding and Extrusion Compounds; ASTM D 2436–85, Standard Specification for Forced-Convection Laboratory Ovens for Electrical Insulation; ASTM D 2633–82 (Reapproved 1989), Standard Methods of Testing Thermoplastic Insulations and Jackets for Wire and Cable; ASTM D 4101–82 (1988), Standard Specification for Propylene Plastic Injection and Extrusion Materials; ASTM D 4565–90a, Standard Test Methods for Physical and Environmental Performance Properties of Insulations and Jackets for Telecommunications Wire and Cable; ASTM D 4566–90, Standard Test Methods for Electrical Performance Properties of Insulations and Jackets for Telecommunications Wire and Cable;

and ASTM E 29–90, Standard Practice for Using Significant Digits in Test Data to Determine Conformance with Specifications, referenced in this section are incorporated by reference by RUS. These incorporations by references were approved by the Director of the Federal Register in accordance with 5 U.S.C. 552(a) and 1 CFR part 51. Copies of the ASTM standards are available for inspection during normal business hours at RUS, room 2845, U.S. Department of Agriculture, Washington, DC 20250–1500, or at the National Archives and Records Administration (NARA). For information on the availability of this material at NARA, call 202–741–6030, or go to: *http://www.archives.gov/federal_register/code_of_federal_regulations/ibr_locations.html*. Copies are available from ASTM, 1916 Race Street, Philadelphia, Pennsylvania 19103–1187, telephone number (215) 299–5585.

(7) American National Standards Institute/National Fire Protection Association (ANSI/NFPA), NFPA 70–1993 National Electrical Code referenced in this section is incorporated by reference by RUS. This incorporation by reference was approved by the Director of the Federal Register in accordance with 5 U.S.C. 552(a) and 1 CFR part 51. A copy of the ANSI/NFPA standard is available for inspection during normal business hours at RUS, room 2845, U.S. Department of Agriculture, Washington, DC 20250–1500, or at the National Archives and Records Administration (NARA). For information on the availability of this material at NARA, call 202–741–6030, or go to: *http://www.archives.gov/federal_register/code_of_federal_regulations/ibr_locations.html*. Copies are available from NFPA, Batterymarch Park, Quincy, Massachusetts 02269, telephone number 1 (800) 344–3555.

(8) Underwriters Laboratories Inc. (UL) 1666, Standard Test for Flame Propagation Height of Electrical and Optical-Fiber Cables Installed Vertically in Shafts, dated January 22, 1991, referenced in this section is incorporated by reference by RUS. This incorporation by reference was approved by the Director of the Federal Register in accordance with 5 U.S.C. 552(a) and 1 CFR part 51. A copy of the UL standard is available for inspection during normal business hours at RUS, room 2845, U.S. Department of Agriculture, Washington, DC 20250–1500, or at the National Archives and Records Administration (NARA). For information on the availability of this material at NARA, call 202–741–6030, or go to: *http://www.archives.gov/federal_register/code_of_federal_regulations/ibr_locations.html*. Copies are available from UL Inc., 333 Pfingsten Road, Northbrook, Illinois 60062–2096, telephone number (708) 272–8800.

(b) *Conductors and conductor insulation*. (1) Each conductor shall be a solid round wire of commercially pure annealed tin coated copper. Conductors shall meet the requirements of the American Society for Testing and Materials (ASTM) B 33–91 except that requirements for *Dimensions and Permissible Variations* are waived.

(2) Joints made in conductors during the manufacturing process may be brazed, using a silver alloy solder and nonacid flux, or they may be welded using either an electrical or cold welding technique. In joints made in uninsulated conductors, the two conductor ends shall be butted. Splices made in insulated conductors need not be butted but may be joined in a manner acceptable to RUS.

(3) The tensile strength of any section of a conductor, containing a factory joint, shall not be less than 85 percent of the tensile strength of an adjacent section of the solid conductor of equal length without a joint.

(4) Engineering Information: The sizes of wire used and their nominal diameters shall be as shown in the following table:

AWG	Nominal diameter	
	Millimeters	(Inches)
22	0.643	(0.0253)
24	0.511	(0.0201)

(5) Each conductor shall be insulated with a primary layer of natural or white solid, insulating grade, high density polyethylene or crystalline propylene/ethylene copolymer and an outer skin of colored, solid, insulating grade, polyvinyl chloride (PVC) using one of the insulating materials listed

in paragraphs (b)(5)(i) through (iii) of this section.

(i) The polyethylene raw material selected to meet the requirements of this section shall be Type III, Class A, Category 4 or 5, Grade E9, in accordance with ASTM D 1248–84 (1989).

(ii) The crystalline propylene/ethylene raw material selected to meet the requirements of this section shall be Class PP 200B 40003 E11 in accordance with ASTM D 4101–82 (1988).

(iii) The PVC raw material selected to meet the requirements of this section shall be either Type PVC–64751E3XO, Type PVC–76751E3XO, or Type PVC–77751E3XO in accordance with ASTM D 2287–81 (1988).

(iv) Raw materials intended as conductor insulation furnished to these requirements shall be free from dirt, metallic particles, and other foreign matter.

(v) All insulating raw materials shall be accepted by RUS prior to their use.

(6) All conductors in any single length of cable shall be insulated with the same type of material.

(7) A permissible overall performance level of faults in conductor insulation when using the test procedures in paragraph (b)(8) of this section shall average not greater than one fault per 12,000 conductor meters (40,000 conductor feet) for each gauge of conductor.

(8) The test used to determine compliance with paragraph (b)(7) of this section shall be conducted as follows:

(i) Samples tested shall be taken from finished cables selected at random from standard production cable. The samples tested shall contain a minimum of 300 conductor meters (1,000 conductor feet) for cables sizes less than 50 pairs and 1,500 conductor meters (5,000 conductor feet) for cables sizes greater than or equal to 50 pairs. No further sample need be taken from the same cable production run within 6,000 cable meters (20,000 cable feet) of the original test sample from that run.

(ii) The cable sample shall have its jacket, shield, and core wrap removed and its core shall be immersed in tap water for a minimum period of 6 hours. In lieu of removing the jacket, shield, and core wrap from the core, the entire cable may be tested. In this case, the core shall be completely filled with tap water, under pressure; then the cable assembly shall be immersed for a minimum period of 6 hours. With the cable core still fully immersed, except for end connections, the insulation resistance (IR) of all conductors to water shall be measured using a direct current (dc) voltage of 100 volts to 550 volts.

(iii) An IR value of less than 500 megohms for any individual insulated conductor tested at or corrected to a temperature of 23 °C is considered a failure. If the cable sample is more than 7.5 meters (25 feet) long, all failing conductors shall be retested and reported in 7.5 meter (25 foot) segments.

(iv) The pair count, gauge, footage, and number of insulation faults shall be recorded. This information shall be retained on a 6 month running basis for review by RUS when requested.

(v) A fault rate, in a continuous length in any one reel, in excess of one fault per 3,000 conductor meters (10,000 conductor feet) due to manufacturing defects is cause for rejection. A minimum of 6,000 conductor meters (20,000 conductor feet) is required to develop a noncompliance in a reel.

(9) Repairs to the conductor insulation during manufacturing are permissible. The method of repair shall be accepted by RUS prior to its use. The repaired insulation shall be capable of meeting the relevant electrical requirements of this section.

(10) All repaired sections of insulation shall be retested in the same manner as originally tested for compliance with paragraph (b)(7) of this section.

(11) The colored composite insulating material removed from or tested on the conductor, from a finished cable, shall be capable of meeting the following performance requirements:

Property	Composite insulation
Tensile Strength, Minimum Megapascals (MPa) (Pounds per square inch (psi))	16.5 (2400)
Ultimate Elongation Percent, Minimum	125
Cold Bend Failures, Maximum	0/10
Shrinkback, Maximum Millimeter (mm) (Inches (in.))	9.5 (3/8)
Adhesion, Maximum Newtons (N) (Pound-force (lbf))	13.3 (3)
Compression Minimum, N (lbf)	1780 (400)

(12) *Testing procedures.* The procedures for testing the composite insulation samples for compliance with paragraph (b)(11) of this section shall be as follows:

(i) *Tensile strength and ultimate elongation.* Samples of the insulation material, removed from the conductor, shall be tested in accordance with ASTM D 2633–82(1989), except that the speed of jaw separation shall be 50 millimeters/minute (50 mm/min) (2 inches/minute (2 in./min)).

NOTE: Quality assurance testing at a jaw separation speed of 500 mm/min (20 in./min) is permissible. Failures at this rate shall be retested at the 50 mm/min (2 in./min) rate to determine specification compliance.

(ii) *Cold bend.* Samples of the insulation material on the conductor shall be tested in accordance with ASTM D 4565–90a at a temperature of −40±1 °C with a mandrel diameter of 6 mm (0.25 in.). There shall be no cracks visible to normal or corrected-to-normal vision.

(iii) *Shrinkback.* Samples of insulation shall be tested for four hours at a temperature of 115±1 °C in accordance with ASTM D 4565–90a.

(iv) *Adhesion.* Samples of insulation material on the conductor shall be tested in accordance with ASTM D 4565–90a with a crosshead speed of 50 mm/min (2 in./min).

(v) *Compression.* Samples of the insulation material on the conductor shall be tested in accordance with ASTM D 4565–90a with a crosshead speed of 5 mm/min (0.2 in./min).

(13) Other methods of testing may be used if acceptable to RUS.

(c) *Identification of pairs and twisting of pairs.* (1) The PVC skin shall be colored to identify:

(i) The tip and ring conductor of each pair; and

(ii) Each pair in the completed cable.

(2) The colors used to provide identification of the tip and ring conductor of each pair shall be as shown in the following table:

Pair No.	Color	
	Tip	Ring
1	White	Blue
2	White	Orange
3	White	Green
4	White	Brown
5	White	Slate
6	Red	Blue
7	Red	Orange
8	Red	Green
9	Red	Brown
10	Red	Slate
11	Black	Blue
12	Black	Orange
13	Black	Green
14	Black	Brown
15	Black	Slate
16	Yellow	Blue
17	Yellow	Orange
18	Yellow	Green
19	Yellow	Brown
20	Yellow	Slate
21	Violet	Blue
22	Violet	Orange
23	Violet	Green
24	Violet	Brown
25	Violet	Slate

(3) *Standards of color.* The colors of the insulated conductors supplied in accordance with this section are specified in terms of the Munsell Color System (ASTM D 1535–89) and shall comply with the ''Table of Wire and Cable Limit Chips'' as defined in ANSI/EIA–359–A–84. (Visual color standards meeting these requirements may be obtained directly from the Munsell Color Company, Inc., 2441 North Calvert Street, Baltimore, Maryland 21218).

(4) Positive identification of the tip and ring conductors of each pair by marking each conductor of a pair with the color of its mate is permissible. The method of marking shall be accepted by RUS prior to its use.

(5) Other methods of providing positive identification of the tip and ring conductors of each pair may be employed if accepted by RUS prior to its use.

(6) The insulated conductors shall be twisted into pairs.

(7) In order to provide sufficiently high crosstalk isolation, the pair twists shall be designed to enable the cable to meet the capacitance unbalance and the crosstalk loss requirements of paragraphs (h)(2), (h)(3), and (h)(4) of this section.

(8) The average length of pair twists in any pair in the finished cable, when measured on any 3 meter (m) (10 foot (ft)) length, shall not exceed 152 mm (6 in.).

(d) *Forming of the cable core.* (1) Twisted pairs shall be assembled in such a way as to form a substantially cylindrical group.

(2) When desired for lay-up reasons, the basic group may be divided into two or more subgroups called units.

(3) Each group, or unit in a particular group, shall be enclosed in bindings of the colors indicated for its particular pair count. The pair count, indicated by the color of insulation, shall be consecutive as indicated in paragraph (d)(5) of this section through units in a group.

(4) Threads or tapes used as binders shall be nonhygroscopic and nonwicking. The threads shall consists of a suitable number of ends of each color arranged as color bands. When tapes are used as binders, they shall be colored. Binders shall be applied with a lay of not more than 100 mm (4 in.). The colored binders shall be readily recognizable as the basic intended color and shall be distinguishable from all other colors.

(5) The colors of the bindings and their significance with respect to pair count shall be as shown in the following table:

Group No.	Color of bindings	Group pair count
1	White-Blue	1–25
2	White-Orange	26–50
3	White-Green	51–75
4	White-Brown	76–100
5	White-Slate	101–125
6	Red-Blue	126–150
7	Red-Orange	151–175
8	Red-Green	176–200
9	Red-Brown	201–225
10	Red-Slate	226–250
11	Black-Blue	251–275
12	Black-Orange	276–300
13	Black-Green	301–325
14	Black-Brown	326–350
15	Black-Slate	351–375
16	Yellow-Blue	376–400
17	Yellow-Orange	401–425
18	Yellow-Green	426–450
19	Yellow-Brown	451–475
20	Yellow-Slate	476–500
21	Violet-Blue	501–525
22	Violet-Orange	526–550
23	Violet-Green	551–575
24	Violet-Brown	576–600

(6) The use of the white unit binder in cables of 100 pair or less is optional.

(7) When desired for manufacturing reasons, two or more 25 pair groups may be bound together with nonhygroscopic and nonwicking threads or tapes into super-units. The group binders and the super-unit binders shall be colored such that the combination of the two binders shall positively identify each 25 pair group from every other 25 pair group in the cable.

(8) Super-unit binders shall be of the colors shown in the following table:

SUPER-UNIT BINDER COLORS

Pair No.	Binder color
1–600	White
601–1200	Red

(e) *Core wrap.*(1) The core shall be completely covered with a layer of nonhygroscopic and nonwicking dielectric material. The core wrap shall be applied with an overlap.

(2) The core wrap shall provide a sufficient heat barrier to prevent visible evidence of conductor insulation deformation or adhesion between conductors, caused by adverse heat transfer during the jacketing operation.

(3) Engineering Information: If required for manufacturing reasons, white or uncolored binders of nonhygroscopic and nonwicking material may be applied over the core and/or core wrap.

(f) *Shield.* (1) An aluminum shield, plastic coated on one side, shall be applied longitudinally over the core wrap.

(2) The shield may be applied over the core wrap with or without corrugations (smooth) and shall be bonded to the outer jacket.

(3) The shield overlap shall be a minimum of 3 mm (0.125 in.) for cables with core diameters of 15 mm (0.625 in.) or less and a minimum of 6 mm (0.25 in.) for cables with core diameters greater than 15 mm (0.625 in.). The core diameter is defined as the diameter under the core wrap and binding.

(4) General requirements for application of the shielding material shall be as follows:

(i) Successive lengths of shielding tapes may be joined during the manufacturing process by means of cold weld, electric weld, soldering with a nonacid flux, or other acceptable means;

(ii) The metal shield with the plastic coating shall have the coating removed prior to joining the metal ends together. After joining, the plastic coating shall be restored without voids using good manufacturing techniques;

(iii) The shields of each length of cable shall be tested for continuity. A

one meter (3 ft) section of shield containing a factory joint shall exhibit not more than 110 percent of the resistance of a shield of equal length without a joint;

(iv) The breaking strength of any section of a shield tape containing a factory joint shall not be less than 80 percent of the breaking strength of an adjacent section of the shield of equal length without a joint;

(v) The reduction in thickness of the shielding material due to the corrugating or application process shall be kept to a minimum and shall not exceed 10 percent at any spot; and

(vi) The shielding material shall be applied in such a manner as to enable the cable to pass the bend test as specified in paragraph (i)(1) of this section.

(5) The dimensions of the uncoated aluminum tape shall be 0.2030±0.0254 mm (0.0080±0.0010 in.).

(6) The aluminum tape shall conform to either Alloy AA–1100–0, AA–1145–0, or AA–1235–0 as covered in the latest edition of Aluminum Standards and Data, issued by the Aluminum Association, except that requirements for tensile strength are waived.

(7) The single-sided plastic coated aluminum shield shall conform to the requirements of ASTM B 736–92a, Type I Coating, Class 1 or 2, or Type II Coating, Class 1. The minimum thickness of the Type I Coating shall be 0.038 mm (0.0015 in.). The minimum thickness of the Type II Coating shall be 0.008 mm (0.0003 in.).

(8) The plastic coated aluminum shield shall be tested for resistance to water migration by immersing a one meter (3 ft) length of tape under a one meter (3 ft) head of water containing a soluble dye plus 0.25 percent (%) wetting agent.

(i) After a minimum of 5 minutes, no dye shall appear between the interface of the shield tape and the plastic coating.

(ii) The actual test method shall be acceptable to RUS.

(9) The bond between the plastic coated shield and the jacket shall conform to the following requirements:

(i) Prepare test strips approximately 200 mm (8 in.) in length. Slit the jacket and shield longitudinally to produce 4 strips evenly spaced and centered in 4 quadrants on the jacket circumference. One of the strips shall be centered over the overlapped edge of the shielding tape. The strips shall be 13 mm (0.5 in.) wide. For cable diameters less than 19 mm (0.75 in.) make two strips evenly spaced.

(ii) Separate the shield and jacket for a sufficient distance to allow the shield and jacket to be fitted in the upper and lower jaws of a tensile machine. Record the maximum force required to separate the shield and jacket to the nearest newton (pound-force). Repeat this action for each test strip.

(iii) The force required to separate the jacket from the shield shall not be less than 9 N (2 lbf) for any individual strip when tested in accordance with paragraph (f)(9)(ii) of this section. The average force for all strips of any cable shall not be less than 18 N (4 lbf).

(g) *Cable jacket and extraneous material.* (1) The jacket shall provide the cable with a tough, flexible, protective covering which can withstand stresses reasonably expected in normal installation and service.

(2) The jacket shall be free from holes, splits, blisters, or other imperfections and shall be as smooth and concentric as is consistent with the best commercial practice.

(3) The raw material used for the cable jacket shall be one of the following four types:

(i) Type PVC–55554EOXO in accordance with ASTM D 2287–81(1988);

(ii) Type PVC–65554EOXO in accordance with ASTM D 2287–81(1988);

(iii) Type PVC–55556EOXO in accordance with ASTM D 2287–81(1988); or

(iv) Type PVC–66554EOXO in accordance with ASTM D 2287–81(1988).

(4) The jacketing material removed from or tested on the cable shall be capable of meeting the following performance requirements:

Property	Jacket performance
Tensile Strength-Unaged Minimum, MPa (psi)	13.8 (2000)
Ultimate Elongation-Unaged Minimum, Percent (%)	200
Tensile Strength-Aged Minimum, % of original value	80
Ultimate Elongation-Aged Minimum, % of original value	50
Impact Failures, Maximum	2/10

(5) *Testing procedures*. The procedures for testing the jacket samples for compliance with paragraph (g)(4) of this section shall be as follows:

(i) *Tensile strength and ultimate elongation-unaged*. The test shall be performed in accordance with ASTM D 2633–82(1989), using a jaw separation speed of 50 mm/min (2 in./min).

NOTE: Quality assurance testing at a jaw separation speed of 500 mm/min (20 in./min) is permissible. Failures at this rate shall be retested at the 50 mm/min (2 in./min) rate to determine specification compliance.

(ii) *Tensile strength and ultimate elongation-aged*. The test shall be performed in accordance with paragraph (g)(5)(i) of this section after being aged for 7 days at a temperature of 100±1 °C in a circulating air oven conforming to ASTM D 2436–85.

(iii) *Impact*. The test shall be performed in accordance with ASTM D 4565–90a using an impact force of 4 newton-meter (3 pound force-foot) at a temperature of −10±1 °C. The cylinder shall strike the sample at the shield overlap. A crack or split in the jacket constitutes failure.

(6) *Jacket thickness*. The nominal jacket thickness shall be as specified in the following table. The test method used shall be either the End Sample Method (paragraph (g)(6)(i) of this section) or the Continuous Uniformity Thickness Gauge Method (paragraph (g)(6)(ii) of this section):

No. of pairs	Nominal jacket thickness mm (in.)
25 or less	1.4 (0.055)
50	1.5 (0.060)
100	1.7 (0.065)
200	1.9 (0.075)
300	2.2 (0.085)
400	2.4 (0.095)
600	2.9 (0.115)
800 and over	3.3 (0.130)

(i) *End sample method*. The jacket shall be capable of meeting the following requirements:

Minimum Average Thickness—90% of nominal thickness

Minimum Thickness—70% of nominal thickness

(ii) *Continuous uniformity thickness gauge method*. (A) The jacket shall be capable of meeting the following requirements:

Minimum Average Thickness—90% of nominal thickness

Minimum (Min.) Thickness—70 % of nominal thickness

Maximum (Max.) Eccentricity—55%

Eccentricity=Max. Thickness—Min. Thickness (Average Thickness)×100

(B) *Maximum and minimum thickness values*. The maximum and minimum thickness values shall be based on the average of each axial section.

(7) The color of the jacket shall be either black or dark grey in conformance with the Munsell Color System specified in ASTM D 1535–89.

(8) There shall be no water or other contaminants in the finished cable which would have a detrimental effect on its performance or its useful life.

(h) *Electrical requirements*—(1) *Mutual capacitance and conductance*. (i) The average mutual capacitance (corrected for length) of all pairs in any reel shall not exceed the following when tested in accordance with ASTM D 4566–90 at a frequency of 1.0±0.1 kilohertz (kHz) and a temperature of 23±3 °C:

Number of cable pairs	Mutual capacitance	
	Nanofarad/kilometer	(Nanofarad/mile)
12	52±4	(83±7)
Over 12	52±2	(83±4)

(ii) The root mean square (rms) deviation of the mutual capacitance of all pairs from the average mutual capacitance of that reel shall not exceed 3.0 % when calculated in accordance with ASTM D 4566–90.

(iii) The mutual conductance (corrected for length and gauge) of any pair shall not exceed 3.7 micromhos/kilometer (micromhos/km) (6.0 micromhos/mile) when tested in accordance with ASTM D 4566–90 at a frequency of 1.0±0.1 kHz and a temperature of 23±3 °C.

(2) *Pair-to-pair capacitance unbalance*. The capacitance unbalance as measured on the completed cable shall not exceed 45.3 picofarad/kilometer (pF/km) (25 picofarad/1000 ft (pF/1000 ft)) rms when tested in accordance with ASTM D 4566–90 at a frequency of 1.0±0.1 kHz and a temperature of 23±3 °C.

(3) *Pair-to-ground capacitance unbalance*. (i) The average capacitance unbalance as measured on the completed

cable shall not exceed 574 pF/km (175 pF/1000 ft) when tested in accordance with ASTM D 4566–90 at a frequency of 1±0.1 kHz and a temperature of 23±3 °C.

(ii) When measuring pair-to-ground capacitance unbalance all pairs except the pair under test are grounded to the shield except when measuring cable containing super-units in which case all other pairs in the same super-unit shall be grounded to the shield.

(iii) Pair-to-ground capacitance unbalance may vary directly with the length of the cable.

(4) *Crosstalk loss.* (i) The rms output-to-output far-end crosstalk loss (FEXT) measured on the completed cable in accordance with ASTM D 4566–90 at a test frequency of 150 kHz shall not be less than 68 decibel/kilometer (dB/km) (73 decibel/1000 ft (dB/1000 ft)). The rms calculation shall be based on the combined total of all adjacent and alternate pair combinations within the same layer and center to first layer pair combinations.

(ii) The FEXT crosstalk loss between any pair combination of a cable shall not be less than 58 dB/km (63 dB/1000 ft) at a frequency of 150 kHz. If the loss K_o at a frequency F_o for length L_o is known, then K_x can be determined for any other frequency F_x or length L_x by:

$$\text{FEXT loss}\,(K_x) = K_o - 20\log 10\,\frac{F_x}{F_o} - 10\log 10\,\frac{L_x}{L_o}$$

(iii) The near-end crosstalk loss (NEXT) as measured within and between units of a completed cable in accordance with ASTM D 4566–90 at a frequency of 772 kHz shall not be less than the following mean minus sigma (M-S) crosstalk requirement for any unit within the cable:

Unit size	M-S decibel (dB)
Within Unit:	
12 and 13 pairs	56
18 and 25 pairs	60
Between Unit:	
Adjacent 13 pairs	65
Adjacent 25 pairs	66
Nonadjacent (all)	81

Where M-S is the Mean near-end coupling loss based on the combined total of all pair combinations, less one Standard Deviation, Sigma, of the mean value.

(5) *Insulation resistance.* Each insulated conductor in each length of completed cable, when measured with all other insulated conductors and the shield grounded, shall have an insulation resistance of not less than 152 megohm-kilometer (500 megohm-mile) at 20±1 °C. The measurement shall be made in accordance with the procedures of ASTM D 4566–90.

(6) *High voltage test.* (i) In each length of completed cable, the dielectric strength of the insulation between conductors shall be tested in accordance with ASTM D 4566–90 and shall withstand, for 3 seconds, a direct current (dc) potential whose value is not less than:

(A) 3.6 kilovolts for 22-gauge conductors; or

(B) 3.0 kilovolts for 24-gauge conductors.

(ii) In each length of completed cable, the dielectric strength between the shield and all conductors in the core shall be tested in accordance with ASTM D 4566–90 and shall withstand, for 3 seconds, a dc potential whose value is not less than 10 kilovolts.

(7) *Conductor resistance.* The dc resistance of any conductor shall be measured in the completed cable in accordance with ASTM D 4566–90 and shall not exceed the following values when measured at or corrected to a temperature of 20±1 °C:

AWG	Maximum resistance	
	ohms/kilometer	(ohms/1000 ft)
22	60.7	(18.5)
24	95.1	(29.0)

(8) *Resistance unbalance.* (i) The difference in dc resistance between the

two conductors of a pair in the completed cable shall not exceed the values listed in this paragraph when measured in accordance with the procedures of ASTM D 4566–90:

AWG	Resistance unbalance	Maximum for any reel
	Average percent	Individual pair percent
22	1.5	4.0
24	1.5	5.0

(ii) The resistance unbalance between tip and ring conductors shall be random with respect to the direction of unbalance. That is, the resistance of the tip conductors shall not be consistently higher with respect to the ring conductors and vice versa.

(9) *Electrical variations*. (i) Pairs in each length of cable having either a ground, cross, short, or open circuit condition shall not be permitted.

(ii) The maximum number of pairs in a cable which may vary as specified in paragraph (h)(9)(iii) of this section from the electrical parameters given in this section are listed in this paragraph. These pairs may be excluded from the arithmetic calculation:

Nominal pair count	Maximum No. of pairs with allowable electrical variation
12–100	1
101–300	2
301–400	3
401–600	4
601 and above	6

(iii) *Parameter variations*—(A) *Capacitance unbalance-to-ground*. If the cable fails either the maximum individual pair or average capacitance unbalance-to-ground requirement and all individual pairs are 3280 pF/km (1000 pF/1000 ft) or less the number of pairs specified in paragraph (h)(9)(ii) of this section may be eliminated from the average and maximum individual calculations.

(B) *Resistance unbalance*. Individual pair of not more than 7 percent for all gauges.

(C) *Far end crosstalk*. Individual pair combination of not less than 52 dB/km (57 dB/1000 ft).

NOTE: RUS recognizes that in large pair count cables (600 pair and above) a cross, short, or open circuit condition occasionally may develop in a pair which does not affect the performance of the other cable pairs. In these circumstances rejection of the entire cable may be economically unsound or repairs may be impractical. In such circumstances the manufacturer may desire to negotiate with the customer for acceptance of the cable. No more than 0.5 percent of the pairs may be involved.

(i) *Mechanical requirements*—(1) *Cable cold bend test*. The completed cable shall be capable of meeting the requirements of ASTM D 4565–90a after conditioning at −20 ±2 °C except the mandrel diameters shall be as specified below:

Cable outside diameter	Mandrel diameter
<40 mm (1.5 in.)	15x
≥40 mm (1.5 in.)	20x

(2) *Cable flame test*. The completed cable shall be capable of meeting a maximum flame height of 3.7 m (12.0 ft) when tested in accordance with Underwriters Laboratories (UL) 1666 dated January 22, 1991.

(3) *Cable listing*. All cables manufactured to the specification of this section at a minimum shall be listed as Communication Riser Cable (Type CMR) in accordance with Sections 800–50 and 800–51(b) of the 1993 National Electrical Code.

(j) *Sheath slitting cord (optional)*. (1) Sheath slitting cords may be used in the cable structure at the option of the manufacturer.

(2) When a sheath slitting cord is used it shall be nonhygroscopic and nonwicking, continuous throughout a length of cable, and of sufficient strength to open the sheath without breaking the cord.

(3) Sheath slitting cords shall be capable of consistently slitting the jacket and/or shield for a continuous length of 0.6 m (2 ft) when tested in accordance with the procedure specified in appendix B of this section.

(k) *Identification marker and length marker*. (1) Each length of cable shall be permanently identified as to manufacturer and year of manufacture.

(2) The number of conductor pairs and their gauge size shall be marked on the jacket.

(3) The marking shall be printed on the jacket at regular intervals of not more than 1.5 m (5 ft).

(4) An alternative method of marking may be used if accepted by RUS prior to its use.

(5) The completed cable shall have sequentially numbered length markers in FEET OR METERS at regular intervals of not more than 1.5 m (5 ft) along the outside of the jacket.

(6) The method of length marking shall be such that for any single length of cable, continuous sequential numbering shall be employed.

(7) The numbers shall be dimensioned and spaced to produce good legibility and shall be approximately 3 mm (0.125 in.) in height. An occasional illegible marking is permissible if there is a legible marking located not more than 1.5 m (5 ft) from it.

(8) The method of marking shall be by means of suitable surface markings producing a clear, distinguishable, contrasting marking acceptable to RUS. Where direct or transverse printing is employed, the characters should be indented to produce greater durability of marking. Any other method of length marking shall be acceptable to RUS as producing a marker suitable for the field. Size, shape and spacing of numbers, durability, and overall legibility of the marker shall be considered in acceptance of the method.

(9) The accuracy of the length marking shall be such that the actual length of any cable section is never less than the length indicated by the marking and never more than one percent greater than the length indicated by the marking.

(10) The color of the initial marking for a black colored jacket shall be either white or silver. The color of the initial marking for a dark grey colored jacket shall be either red or black. If the initial marking of the black colored jacket fails to meet the requirements of the preceding paragraphs, it will be permissible to either remove the defective marking and re-mark with the white or silver color or leave the defective marking on the cable and re-mark with yellow. If the initial marking of the dark grey colored jacket fails to meet the requirements of the preceding paragraphs, it will be permissible to either remove the defective marking and re-mark with the red or black color or leave the defective marking on the cable and re-mark with yellow. No further re-marking is permitted. Any re-marking shall be on a different portion of the cable circumference than any existing marking when possible and have a numbering sequence differing from any other existing marking by at least 5,000.

(11) Any reel of cable which contains more than one set of sequential markings shall be labeled to indicate the color and sequence of marking to be used. The labeling shall be applied to the reel and also to the cable.

(l) *Preconnectorized cable* (optional). (1) At the option of the manufacturer and upon request by the purchaser, cables 100 pairs and larger may be factory terminated in 25 pair splicing modules.

(2) The splicing modules shall meet the requirements of RUS Bulletin 345–54, PE–52, RUS Specification for Telephone Cable Splicing Connectors (Incorporated by Reference at §1755.97), and be accepted by RUS prior to their use.

(m) *Acceptance testing and extent of testing*. (1) The tests described in appendix A of this section are intended for acceptance of cable designs and major modifications of accepted designs. RUS decides what constitutes a major modification. These tests are intended to show the inherent capability of the manufacturer to produce cable products having long life and stability.

(2) For initial acceptance, the manufacturer shall submit:

(i) An original signature certification that the product fully complies with each section of the specification;

(ii) Qualification Test Data, per appendix A of this section;

(iii) To periodic plant inspections;

(iv) A certification that the product does or does not comply with the domestic origin manufacturing provisions of the ''Buy American'' requirements of the Rural Electrification Act of 1938 (7 U.S.C. 901 *et seq.*);

(v) Written user testimonials concerning performance of the product; and

(vi) Other nonproprietary data deemed necessary by the Chief, Outside Plant Branch (Telephone).

(3) For requalification acceptance, the manufacturer shall submit an original signature certification that

the product fully complies with each section of the specification, excluding the Qualification Section, and a certification that the product does or does not comply with the domestic origin manufacturing provisions of the ''Buy American'' requirements of the Rural Electrification Act of 1938 (7 U.S.C. 901 *et seq.*) for acceptance by June 30 every three years. The required data and certification shall have been gathered within 90 days of the submission.

(4) Initial and requalification acceptance requests should be addressed to: Chairman, Technical Standards Committee ''A'' (Telephone), Telecommunications Standards Division, Rural Utilities Service, Washington, DC 20250–1500.

(5) *Tests on 100 percent of completed cable.* (i) The shield of each length of cable shall be tested for continuity using the procedures of ASTM D 4566–90.

(ii) Dielectric strength between all conductors and the shield shall be tested to determine freedom from grounds in accordance with paragraph (h)(6)(ii) of this section.

(iii) Each conductor in the completed cable shall be tested for continuity using the procedures of ASTM D 4566–90.

(iv) Dielectric strength between conductors shall be tested to ensure freedom from shorts and crosses in accordance with paragraph (h)(6)(i) of this section.

(v) Each conductor in the completed preconnectorized cable shall be tested for continuity.

(vi) Each length of completed preconnectorized cable shall be tested for split pairs.

(vii) The average mutual capacitance shall be measured on all cables. If the average mutual capacitance for the first 100 pairs tested from randomly selected groups is between 50 and 53 nF/km (80 to 85 nF/mile), the remainder of the pairs need not to be tested on the 100 percent basis. (See paragraph (h)(1) of this section).

(6) *Capability tests.* Tests on a quality assurance basis shall be made as frequently as is required for each manufacturer to determine and maintain compliance with:

(i) Performance requirements for conductor insulation and jacket material;

(ii) Bonding properties of coated or laminated shielding materials;

(iii) Sequential marking and lettering;

(iv) Capacitance unbalance and crosstalk;

(v) Insulation resistance;

(vi) Conductor resistance and resistance unbalance;

(vii) Cable cold bend and cable flame tests; and

(viii) Mutual conductance.

(n) *Summary of records of electrical and physical tests.* (1) Each manufacturer shall maintain a suitable summary of records for a period of at least 3 years for all electrical and physical tests required on completed cable by this section as set forth in paragraphs (m)(5) and (m)(6) of this section. The test data for a particular reel shall be in a form that it may be readily available to the purchaser or to RUS upon request.

(2) Measurements and computed values shall be rounded off to the number of places of figures specified for the requirement according to ASTM E 29–90.

(o) *Manufacturing irregularities.* (1) Repairs to the shield are not permitted in cable supplied to the end user under this section.

(2) No repairs or defects in the jacket are allowed.

(p) *Preparation for shipment.* (1) The cable shall be shipped on reels unless otherwise specified or agreed to by the purchaser. The diameter of the drum shall be large enough to prevent damage to the cable from reeling or unreeling. The reels shall be substantial and so constructed as to prevent damage to the cable during shipment and handling.

(2) A waterproof corrugated board or other means of protection acceptable to RUS shall be applied to the reel and shall be suitably secured in place to prevent damage to the cable during storage and shipment.

(3) The outer end of the cable shall be securely fastened to the reel head so as to prevent the cable from becoming loose in transit. The inner end of the cable shall be securely fastened in such a way as to make it readily available if required for electrical testing. Spikes,

staples, or other fastening devices which penetrate the cable jacket shall not be used. The method of fastening the cable ends shall be accepted by RUS prior to it being used.

(4) Each length of cable shall be wound on a separate reel unless otherwise specified or agreed to by the purchaser.

(5) The arbor hole shall admit a spindle 63 mm (2.5 in.) in diameter without binding. Steel arbor hole liners may be used but shall be acceptable to RUS prior to their use.

(6) Each reel shall be plainly marked to indicate the direction in which it should be rolled to prevent loosening of the cable on the reel.

(7) Each reel shall be stenciled or labeled on either one or both sides with the name of the manufacturer, year of manufacture, actual shipping length, an inner and outer end sequential length marking, description of the cable, reel number and the RUS cable designation:

Cable Designation

CT
Cable Construction
Pair Count
Conductor Gauge

A = Coated Aluminum Shield

P = Preconnectorized Cable

Example: CTAP 100–22

Terminating Cable, Coated Aluminum Shield, Preconnectorized, 100 pairs, 22 AWG.

(8) When preconnectorized cable is shipped, the splicing modules shall be protected to prevent damage during shipment and handling. The protection method shall be acceptable to RUS prior to its use.

(The information collection and recordkeeping requirements of this section have been approved by the Office of Management and Budget (OMB) under control number 0572–0059)

APPENDIX A TO § 1755.870—QUALIFICATION TEST METHODS

(I) The test procedures described in this appendix are for qualification of initial designs and major modifications of accepted designs. Included in paragraph (V) of this appendix are suggested formats that may be used in submitting test results to RUS.

(II) *Sample Selection and Preparation.* (1) All testing shall be performed on lengths removed sequentially from the same 25 pair, 22 gauge jacketed cable. This cable shall not have been exposed to temperatures in excess of 38 °C since its initial cool down after sheathing. The lengths specified are minimum lengths and if desirable from a laboratory testing standpoint longer lengths may be used.

(a) Length A shall be 12 ±0.2 meters (40 ±0.5 feet) long. Prepare the test sample by removing the jacket, shield, and core wrap for a sufficient distance on both ends to allow the insulated conductors to be flared out. Remove sufficient conductor insulation so that appropriate electrical test connections can be made at both ends. Coil the sample with a diameter of 15 to 20 times its sheath diameter. Two lengths are required.

(b) Length B shall be 300 millimeters (1 foot) long. Three lengths are required.

(c) Length C shall be 3 meters (10 feet) long and shall be maintained at 23 ±3 °C for the duration of the test. Two lengths are required.

(2) *Data Reference Temperature.* Unless otherwise specified, all measurements shall be made at 23 ±3 °C.

(III) *Environmental Tests*—(1) *Heat Aging Test*—(a) *Test Samples.* Place one sample each of lengths A and B in an oven or environmental chamber. The ends of sample A shall exit from the chamber or oven for electrical tests. Securely seal the oven exit holes.

(b) *Sequence of Tests.* Sample B referenced in paragraph (III)(1)(a) of this appendix shall be subjected to the insulation compression test outlined in paragraph (III)(2) of this appendix.

(c) *Initial Measurements.* (i) For sample A, measure the open circuit capacitance and conductance for each odd pair at 1, 150, and 772 kilohertz after conditioning the sample at the data reference temperature for 24 hours. Calculate the average and standard deviation for the data of the 13 pairs on a per kilometer (per mile) basis.

(ii) Record on suggested formats in paragraph (V) of this appendix or on other easily readable formats.

(d) *Heat Conditioning.* (i) Immediately after completing the initial measurements, condition the sample for 14 days at a temperature of 65 ±2 °C.

(ii) At the end of this period. Measure and calculate the parameters given in paragraph (III)(1)(c) of this appendix. Record on suggested formats in paragraph (V) of this appendix or on other easily readable formats.

(e) *Overall Electrical Deviation.* (i) Calculate the percent change in all average parameters between the final parameters after conditioning with the initial parameters in paragraph (III)(1)(c) of this appendix.

(ii) The stability of the electrical parameters after completion of this test shall be within the following prescribed limits:

(A) *Capacitance*. The average mutual capacitance shall be within 10 percent of its original value;

(B) The change in average mutual capacitance shall be less than 10 percent over the frequency range of 1 to 150 kilohertz; and

(C) *Conductance*. The average mutual conductance shall not exceed 3.7 micromhos/kilometer (6 micromhos/mile) at a frequency of 1 kilohertz.

(2) *Insulation Compression Test*—(a) *Test Sample B*. Remove jacket, shield, and core wrap being careful not to damage the conductor insulation. Remove one pair from the core and carefully separate and straighten the insulated conductors. Retwist the two insulated conductors together under sufficient tension to form 10 evenly spaced 360 degree twists in a length of 100 millimeters (4 inches).

(b) *Sample Testing*. Center the mid 50 millimeters (2 inches) of the twisted pair between two smooth rigid parallel metal plates measuring 50 millimeters (2 inches) in length or diameter. Apply a 1.5 volt direct current potential between the conductors, using a light or buzzer to indicate electrical contact between the conductors. Apply a constant load of 67 newtons (15 pound-force) on the sample for one minute and monitor for evidence of contact between the conductors. Record results on suggested formats in paragraph (V) of this appendix or on other easily readable formats.

(3) *Temperature Cycling*. (a) Repeat paragraphs (III)(1)(a) through (III)(1)(c)(ii) of this appendix for a separate set of samples A and B which have not been subjected to prior environmental conditioning.

(b) Immediately after completing the measurements, subject the test samples to 10 cycles of temperature between −40 °C and +60 °C. The test samples shall be held at each temperature extreme for a minimum of 1.5 hours during each cycle of temperature. The air within the temperature cycling chamber shall be circulated throughout the duration of the cycling.

(c) Repeat paragraphs (III)(1)(d)(ii) through (III)(2)(b) of this appendix.

(IV) *Control Sample*—(1) *Test Samples*. One length of sample B shall have been maintained at 23 ±3 °C for at least 48 hours before the testing.

(2) Repeat paragraphs (III)(2) through (III)(2)(b) of this appendix.

(3) *Surge Test*. (a) One length of sample C shall be used to measure the breakdown between conductors while the other length of C shall be used to measure core to shield breakdown.

(b) The samples shall be capable of withstanding, without damage, a single surge voltage of 20 kilovolts peak between conductors, and 35 kilovolts peak between conductors and the shield as hereinafter described. The surge voltage shall be developed from a capacitor discharge through a forming resistor connected in parallel with the dielectric of the test sample. The surge generator constants shall be such as to produce a surge of 1.5 × 40 microseconds wave shape.

(c) The shape of the generated wave shall be determined at a reduced voltage by connecting an oscilloscope across the forming resistor with the cable sample connected in parallel with the forming resistor. The capacitor bank is charged to the test voltage and then discharged through the forming resistor and test sample. The test sample shall be considered to have passed the test if there is no distinct change in the wave shape obtained with the initial reduced voltage compared to that obtained after the application of the test voltage.

(V) The following suggested formats may be used in submitting the test results to RUS:

Environmental Conditioning _____

FREQUENCY 1 KILOHERTZ

Pair No.	Capacitance nF/km (nF/mile)		Conductance micromhos/km (micromhos/mile)	
	Initial	Final	Initial	Final
1				
3				
5				
7				
9				
11				
13				
15				
17				
19				
21				
23				
25				
Average $\bar{x}$				

FREQUENCY 1 KILOHERTZ—Continued

Pair No.	Capacitance nF/km (nF/mile)		Conductance micromhos/km (micromhos/mile)	
	Initial	Final	Initial	Final
Overall Percent Difference in Average $\bar{x}$				

Environmental Conditioning _____

FREQUENCY 150 KILOHERTZ

Pair No.	Capacitance nF/km (nF/mile)		Conductance micromhos/km (micromhos/mile)	
	Initial	Final	Initial	Final
1				
3				
5				
7				
9				
11				
13				
15				
17				
19				
21				
23				
25				
Average $\bar{x}$				
Overall Percent Difference in Average $\bar{x}$				

Environmental Conditioning _____

FREQUENCY 772 KILOHERTZ

Pair No.	Capacitance nF/km (nF/mile)		Conductance micromhos/km (micromhos/mile)	
	Initial	Final	Initial	Final
1				
3				
5				
7				
9				
11				
13				
15				
17				
19				
21				
23				
25				
Average $\bar{x}$				
Overall Percent Difference in. Average $\bar{x}$				

	Failures
Insulation Compression:	
Control	
Heat Age	
Temperature Cycling	
Surge Test (kilovolts):	
Conductor-to-Conductor	
Shield-to-Conductors	

APPENDIX B TO § 1755.870—SHEATH SLITTING CORD QUALIFICATION

(I) This test procedure described in this appendix is for qualification of initial and subsequent changes in sheath slitting cords.

(II) *Sample selection.* All testing shall be performed on two 1.2 m (4 ft) lengths of cable removed sequentially from the same 25 pair, 22 gauge jacketed cable. This cable shall not have been exposed to temperatures in excess

of 38 °C since its initial cool down after sheathing.

(III) *Test procedure.* (1) Using a suitable tool, expose enough of the sheath slitting cord to permit grasping with needle nose pliers.

(2) The prepared test specimens shall be maintained at a temperature of 23 ±1 °C for at least 4 hours immediately prior to and during the test.

(3) Wrap the sheath slitting cord around the plier jaws to ensure a good grip.

(4) Grasp and hold the cable in a convenient position while gently and firmly pulling the sheath slitting cord longitudinally in the direction away from the cable end. The angle of pull may vary to any convenient and functional degree. A small starting notch is permissible.

(5) The sheath slitting cord is considered acceptable if the cord can slit the jacket and/or shield for a continuous length of 0.6 m (2 ft) without breaking the cord.

[59 FR 30507, June 14, 1994; 59 FR 34899, July 7, 1994, as amended at 60 FR 1711, Jan. 5, 1995; 69 FR 18803, Apr. 9, 2004]

§§ 1755.871–1755.889 [Reserved]

§ 1755.890 RUS specification for filled telephone cables with expanded insulation.

(a) *Scope.* (1) This section covers the requirements for filled telephone cables intended for direct burial installation either by trenching or by direct plowing, for underground application by placement in a duct, or for aerial installation by attachment to a support strand.

(i) The conductors are solid copper, individually insulated with an extruded cellular insulating compound which may be either totally expanded or expanded with a solid skin coating.

(ii) The insulated conductors are twisted into pairs which are then stranded or oscillated to form a cylindrical core.

(iii) For high frequency applications, the cable core may be separated into compartments with screening shields.

(iv) A moisture resistant filling compound is applied to the stranded conductors completely covering the insulated conductors and filling the interstices between pairs and units.

(v) The cable structure is completed by the application of suitable core wrapping material, a flooding compound, a shield or a shield/armor, and an overall plastic jacket.

(2) The number of pairs and gauge size of conductors which are used within the RUS program are provided in the following table:

AWG	19	22	24	26
Pairs	6	6	6	
	12	12	12	
	18	18	18	
	25	25	25	25
		50	50	50
		75	75	75
		100	100	100
		150	150	150
		200	200	200
		300	300	300
		400	400	400
		600	600	600
		900	900	900
		1000	1000	1000
			1200	1200
			1500	1500
			1800	1800
				2100
				2400
				2700

NOTE: Cables larger in pair sizes than those shown in this table must meet all requirements of this section.

(3) Screened cable, when specified, must meet all requirements of this section. The pair sizes of screened cables used within the RUS program are referenced in paragraph (e)(2)(i) of this section.

(4) All cables sold to RUS borrowers for projects involving RUS loan funds under this section must be accepted by RUS Technical Standards Committee ''A'' (Telephone). For cables manufactured to the specification of this section, all design changes to an accepted design must be submitted for acceptance. RUS will be the sole authority on what constitutes a design change.

(5) Materials, manufacturing techniques, or cable designs not specifically addressed by this section may be allowed if accepted by RUS. Justification for acceptance of modified materials, manufacturing techniques, or cable designs must be provided to substantiate product utility and long-term stability and endurance.

(6) The American National Standard Institute/Insulated Cable Engineers Association, Inc. (ANSI/ICEA) S-84–608–1988, Standard For Telecommunications Cable, Filled, Polyolefin Insulated, Copper Conductor Technical Requirements referenced throughout this section is incorporated by reference by

RUS. This incorporation by reference was approved by the Director of the Federal Register in accordance with 5 U.S.C. 552(a) and 1 CFR part 51. Copies of ANSI/ICEA S-84–608–1988 are available for inspection during normal business hours at RUS, room 2845, U.S. Department of Agriculture, Washington, DC 20250, or at the National Archives and Records Administration (NARA). For information on the availability of this material at NARA, call 202–741–6030, or go to: *http://www.archives.gov/federal_register/code_of_federal_regulations/ibr_locations.html*. Copies are available from ICEA, P. O. Box 440, South Yarmouth, MA 02664, telephone number (508) 394–4424.

(7) American Society for Testing and Materials specifications (ASTM) A 505-87, Standard Specification for Steel, Sheet and Strip, Alloy, Hot-Rolled and Cold-Rolled, General Requirements For; ASTM B 193-87, Standard Test Method for Resistivity of Electrical Conductor Materials; ASTM B 224-80, Standard Classification of Coppers; ASTM B 694-86, Standard Specification for Copper, Copper Alloy, and Copper-Clad Stainless Steel Sheet and Strip for Electrical Cable Shielding; ASTM D 4565-90a, Standard Test Methods for Physical and Environmental Performance Properties of Insulations and Jackets for Telecommunications Wire and Cable; and ASTM D 4566-90, Standard Test Methods for Electrical Performance Properties of Insulations and Jackets for Telecommunications Wire and Cable referenced in this section are incorporated by reference by RUS. These incorporations by references were approved by the Director of the Federal Register in accordance with 5 U.S.C. 552(a) and 1 CFR part 51. Copies of the ASTM standards are available for inspection during normal business hours at RUS, room 2845, U.S. Department of Agriculture, Washington, DC 20250, or at the National Archives and Records Administration (NARA). For information on the availability of this material at NARA, call 202–741–6030, or go to: *http://www.archives.gov/federal_register/code_of_federal_regulations/ibr_locations.html*. Copies area available from ASTM, 1916 Race Street, Philadelphia, PA 19103–1187, telephone number (215) 299–5585.

(b) *Conductors and conductor insulation*. (1) The gauge sizes of the copper conductors covered by this section must be 19, 22, 24, and 26 American Wire Gauge (AWG).

(2) Each conductor must comply with the requirements specified in ANSI/ICEA S-84–608–1988, paragraph 2.1.

(3) Factory joints made in conductors during the manufacturing process must comply with the requirements specified in ANSI/ICEA S-84–608–1988, paragraph 2.2.

(4) The raw materials used for conductor insulation must comply with the requirements specified in ANSI/ICEA S-84–608–1988, paragraphs 3.1 through 3.1.3.

(5) The finished conductor insulation must comply with the requirements specified in ANSI/ICEA S-84–608–1988, paragraphs 3.2.2, 3.2.3, and 3.3.

(6) Insulated conductor must not have an overall diameter greater than 2 millimeters (mm) (0.081 inch (in.)).

(7) A permissible overall performance level of faults in conductor insulation must average not greater than one fault per 12,000 conductor meters (40,000 conductor feet) for each gauge of conductor.

(i) All insulated conductors must be continuously tested for insulation faults during the twinning operation with a method of testing acceptable to RUS. The length count and number of faults must be recorded. The information must be retained for a period of 6 months and be available for review by RUS when requested.

(ii) The voltages for determining compliance with the requirements of this section are as follows:

AWG	Direct Current Voltages (kilovolts)
19	4.5
22	3.6
24	3.0
26	2.4

(8) Repairs to the conductor insulation during manufacture are permissible. The method of repair must be accepted by RUS prior to its use. The repaired insulation must be capable of meeting the relevant electrical requirements of this section.

(9) All repaired sections of insulation must be retested in the same manner as originally tested for compliance with paragraph (b)(7) of this section.

(10) The colored insulating material removed from or tested on the conductor, from a finished cable, must meet the performance requirements specified in ANSI/ICEA S-84–608–1988, paragraphs 3.4.1 through 3.4.6.

(c) *Identification of pairs and twisting of pairs*. (1) The insulation must be colored to identify:

(i) The tip and ring conductor of each pair; and

(ii) Each pair in the completed cable.

(2) The colors to be used in the pairs in the 25 pair group, together with the pair numbers must be in accordance with the table specified in ANSI/ICEA S-84–608–1988, paragraph 3.5.

(3) Positive identification of the tip and ring conductors of each pair by marking each conductor of a pair with the color of its mate is permissible. The method of marking must be accepted by RUS prior to its use.

(4) Other methods of providing positive identification of the tip and ring conductors of each pair may be employed if accepted by RUS prior to its use.

(5) The insulated conductors must be twisted into pairs.

(6) In order to provide sufficiently high crosstalk isolation, the pair twists must be designed to enable the cable to meet the capacitance unbalance and crosstalk loss requirements of paragraphs (k)(5), (k)(6), and (k)(8) this section.

(7) The average length of pair twists in any pair in the finished cable, when measured on any 3 meter (10 foot) length, must not exceed the requirement specified in ANSI/ICEA S-84–608–1988, paragraph 3.5.

(d) *Forming of the cable core*. (1) Twisted pairs must be assembled in such a way as to form a substantially cylindrical group.

(2) When desired for lay-up reasons, the basic group may be divided into two or more subgroups called units.

(3) Each group, or unit in a particular group, must be enclosed in bindings of the colors indicated for its particular pair count. The pair count, indicated by the colors of insulation, must be consecutive as indicated in paragraph (d)(6) of this section through units in a group.

(4) The filling compound must be applied to the cable core in such a way as to provide as near a completely filled core as is commercially practical.

(5) Threads and tapes used as binders must comply with the requirements specified in ANSI/ICEA S-84–608–1988, paragraphs 4.2 and 4.2.1.

(6) The colors of the bindings and their significance with respect to pair count must be as follows:

Group No.	Color of Bindings	Group Pair Count
1	White-Blue	1–25
2	White-Orange	26–50
3	White-Green	51–75
4	White-Brown	76–100
5	White-Slate	101–125
6	Red-Blue	126–150
7	Red-Orange	151–175
8	Red-Green	176–200
9	Red-Brown	201–225
10	Red-Slate	226–250
11	Black-Blue	251–275
12	Black-Orange	276–300
13	Black-Green	301–325
14	Black-Brown	326–350
15	Black-Slate	351–375
16	Yellow-Blue	376–400
17	Yellow-Orange	401–425
18	Yellow-Green	426–450
19	Yellow-Brown	451–475
20	Yellow-Slate	476–500
21	Violet-Blue	501–525
22	Violet-Orange	526–550
23	Violet-Green	551–575
24	Violet-Brown	576–600

(7) The use of the white unit binder in cables of 100 pairs or less is optional.

(8) When desired for manufacturing reasons, two or more 25 pair groups may be bound together with nonhygroscopic and nonwicking threads or tapes into a super-unit. Threads or tapes must meet the requirements specified in paragraph (d)(5) of this section. The group binders and the super-unit binders must be color coded such that the combination of the two binders must positively identify each 25 pair group from every other 25 pair group in the cable. Super-unit binders must be of the color shown in the following table:

SUPER-UNIT BINDER COLORS

Pair Numbers	Binder Color
1–600	White
601–1200	Red
1201–1800	Black
1801–2400	Yellow
2401–3000	Violet
3001–3600	Blue
3601–4200	Orange
4201–4800	Green
4801–5400	Brown
5401–6000	Slate

(9) Color binders must not be missing for more than 90 meters (300 feet) from any 25 pair group or from any subgroup used as part of a super-unit. At any cable cross-section, no adjacent 25 pair groups and no more than one subgroup of any super-unit may have missing binders. In no case must the total number of missing binders exceed three. Missing super-unit binders must not be permitted for any distance.

(10) Any reel of cable which contains missing binders must be labeled indicating the colors and location of the binders involved. The labeling must be applied to the reel and also to the cable.

(e) *Screened cable.* (1) Screened cable must be constructed such that a metallic, internal screen(s) must be provided to separate and provide sufficient isolation between the compartments to meet the requirements of this section.

(2) At the option of the user or manufacturer, identified service pairs providing for voice order and fault location may be placed in screened cables.

(i) The number of service pairs provided must be one per twenty-five operating pairs plus two for a cable size up to and including 400 pairs, subject to a minimum of four service pairs. The pair counts for screened cables are as follows:

SCREENED CABLE PAIR COUNTS

Carrier Pair Count	Service Pairs	Total Pair Count
24	4	28
50	4	54
100	6	106
150	8	158
200	10	210
300	14	314
400	18	418

(ii) The service pairs must be equally divided among the compartments. The color sequence must be repeated in each compartment.

(iii) The electrical and physical characteristics of each service pair must meet all the requirements set forth in this section.

(iv) The colors used for the service pairs must be in accordance with the requirements of paragraph (b)(5) of this section. The color code used for the service pairs together with the service pair number are shown in the following table:

COLOR CODE FOR SERVICE PAIRS

Service Pair No.	Color	
	Tip	Ring
1	White	Red
2	"	Black
3	"	Yellow
4	"	Violet
5	Red	Black
6	"	Yellow
7	"	Violet
8	Black	Yellow
9	"	Violet

(3) The screen tape must comply with the requirements specified in ANSI/ICEA S-84–608–1988, paragraphs 5.1 through 5.4.

(4) The screen tape must be tested for dielectric strength by completely removing the protective coating from one end to be used for grounding purposes.

(i) Using an electrode, over a 30 centimeter (1 foot) length, apply a direct current (dc) voltage at the rate of rise of 500 volts/second until failure.

(ii) No breakdown should occur below 8 kilovolts.

(f) *Filling compound.* (1) After or during the stranding operation and prior to application of the core wrap, filling compound must be applied to the cable core. The compound must be as nearly colorless as is commercially feasible and consistent with the end product requirements and pair identification.

(2) The filling compound must comply with the requirements specified in ANSI/ICEA S-84–608–1988, paragraphs 4.4 through 4.4.4.

(3) The individual cable manufacturer must satisfy RUS that the filling compound selected for use is suitable for its intended application. The filling compound must be applied to the cable

in such a manner that the cable components will not be degraded.

(g) *Core wrap*. (1) The core wrap must comply with the requirements specified in ANSI/ICEA-S-84–608–1988, paragraph 4.3.

(2) If required for manufacturing reasons, white or colored binders of nonhygroscopic and nonwicking material may be applied over the core and/or wrap. When used, binders must meet the requirements specified in paragraph (d)(5) of this section.

(3) Sufficient filling compound must have been applied to the core wrap so that voids or air spaces existing between the core and the inner side of the core wrap are minimized.

(h) *Flooding compound*. (1) Sufficient flooding compound must be applied on all sheath interfaces so that voids and air spaces in these areas are minimized. When the optional armored design is used, the flooding compound must be applied between the core wrap and shield, between the shield and armor, and between the armor and the jacket so that voids and air spaces in these areas are minimized. The use of floodant over the outer metallic substrate is not required if uniform bonding, per paragraph (i)(7) of this section, is achieved between the plastic-clad metal and the jacket.

(2) The flooding compound must comply with the requirements specified in ANSI/ICEA S-84–608–1988, paragraph 4.5 and the jacket slip test requirements of appendix A, paragraph (III)(5) of this section.

(3) The individual cable manufacturer must satisfy RUS that the flooding compound selected for use is acceptable for the application.

(i) *Shield and optional armor*. (1) A single corrugated shield must be applied longitudinally over the core wrap.

(2) For unarmored cable the shield overlap must comply with the requirements specified in ANSI/ICEA S-84–608–1988, paragraph 6.3.2. Core diameter is defined as the diameter under the core wrap and binding.

(3) For cables containing the coated aluminum shield/coated steel armor (CACSP) sheath design, the coated aluminum shield must be applied in accordance with the requirements specified in ANSI/ICEA S-84–608–1988, paragraph 6.3.2, Dual Tape Shielding System.

(4) General requirements for application of the shielding material are as follows:

(i) Successive lengths of shielding tapes may be joined during the manufacturing process by means of cold weld, electric weld, soldering with a nonacid flux or other acceptable means.

(ii) Shield splices must comply with the requirements specified in ANSI/ICEA S-84–608–1988, paragraph 6.3.3.

(iii) The corrugations and the application process of the coated aluminum and copper bearing shields must comply with the requirements specified in ANSI/ICEA S-84–608–1988, paragraph 6.3.1.

(iv) The shielding material must be applied in such a manner as to enable the cable to pass the cold bend test specified in paragraph (l)(3) of this section.

(5) The following is a list of acceptable materials for use as cable shielding. Other types of shielding materials may also be used provided they are accepted by RUS prior to their use.

Standard Cable	Gopher Resistant Cable
8-mil Coated Aluminum [1] 5-mil Copper	10-mil Copper 6-mil Copper-Clad Stainless Steel 5 mil Copper-Clad Stainless Steel 5 mil Copper-Clad Alloy Steel 7-mil Alloy 194 6-mil Alloy 194 8-mil Coated Aluminum [1] and 6-mil Coated Steel [1]

[1] Dimensions of uncoated metal.

(i) The 8-mil aluminum tape must be plastic coated on both sides and must comply with the requirements of ANSI/ICEA S-84–608–1988, paragraph 6.2.2.

(ii) The 5-mil copper tape must comply with the requirements specified in ANSI/ICEA S-84–608–1988, paragraph 6.2.3.

(iii) The 10-mil copper tape must comply with the requirements specified in ANSI/ICEA S-84–608–1988, paragraph 6.2.4.

(iv) The 6-mil copper clad stainless steel tape must comply with the requirements specified in ANSI/ICEA S-84–608–1988, paragraph 6.2.5.

(v) The 5-mil copper clad stainless steel tape must be in the fully annealed condition and must conform to the requirements of American Society for Testing and Materials (ASTM) B 694–86, with a cladding ratio of 16/68/16.

(A) The electrical conductivity of the clad tape must be a minimum of 28 percent of the International Annealed Copper Standard (IACS) when measured per ASTM B 193–87.

(B) The tape must be nominally 0.13 millimeter (0.005 inch) thick with a minimum thickness of 0.11 millimeter (0.0045 inch).

(vi) The 5-mil copper clad alloy steel tape must be in the fully annealed condition and the copper component must conform to the requirements of ASTM B 224–80 and the alloy steel component must conform to the requirements of ASTM A 505–87, with a cladding ratio of 16/68/16.

(A) The electrical conductivity of the copper clad alloy steel tape must comply with the requirement specified in (5)(v)(A) of this section.

(B) The thickness of the copper clad alloy steel tape must comply with the requirements specified in (5)(v)(B) of this section.

(vii) The 6-mil and 7-mil 194 copper alloy tapes must comply with the requirements specified in ANSI/ICEA S-84–608–1988, paragraph 6.2.6.

(6) The corrugation extensibility of the coated aluminum shield must comply with the requirements specified in ANSI/ICEA S-84–608–1988, paragraph 6.4.

(7) When the jacket is bonded to the plastic coated aluminum shield, the bond between the jacket and shield must comply with the requirements specified in ANSI/ICEA S-84–608–1988, paragraph 7.2.6.

(8) A single plastic coated steel corrugated armor must be applied longitudinally directly over the coated aluminum shield listed in paragraph (i)(5) of this section with an overlap complying with the requirements specified in ANSI/ICEA S-84–608–1988, paragraph 6.3.2, Outer Steel Tape.

(9) Successive lengths of steel armoring tapes may be joined during the manufacturing process by means of cold weld, electric weld, soldering with a nonacid flux or other acceptable means. Armor splices must comply with the breaking strength and resistance requirements specified in ANSI/ICEA S-84–608–1988, paragraph 6.3.3.

(10) The corrugations and the application process of the coated steel armor must comply with the requirements specified in ANSI/ICEA S-84–608–1988, paragraph 6.3.1.

(i) The corrugations of the armor tape must coincide with the corrugations of the coated aluminum shield.

(ii) Overlapped portions of the armor tape must be in register (corrugations must coincide at overlap) and in contact at the outer edge.

(11) The armoring material must be so applied to enable the cable to pass the cold bend test specified in paragraph (l)(3) of this section.

(12) The 6-mil steel tape must be electrolytic chrome coated steel (ECCS) plastic coated on both sides and must comply with the requirements specified in ANSI/ICEA S-84–608–1988, paragraph 6.2.8.

(13) When the jacket is bonded to the plastic coated steel armor, the bond between the jacket and armor must comply with the requirement specified in ANSI/ICEA-S-84–608–1988, paragraph 7.2.6.

(j) *Cable jacket.* (1) The jacket must comply with the requirements specified in ANSI/ICEA S-84–608–1988, paragraph 7.2.

(2) The raw materials used for the cable jacket must comply with the requirements specified in ANSI/ICEA S-84–608–1988, paragraph 7.2.1.

(3) Jacketing material removed from or tested on the cable must meet the performance requirements specified in ANSI/ICEA S-84–608–1988, paragraphs 7.2.3 and 7.2.4.

(4) The thickness of the jacket must comply with the requirements specified in ANSI/ICEA S-84–608–1988, paragraph 7.2.2.

(k) *Electrical requirements*—(1) *Conductor resistance.* The direct current resistance of any conductor in a completed cable and the average resistance of all conductors in a Quality Control Lot must comply with the requirements specified in ANSI/ICEA S-84–608–1988, paragraph 8.1.

(2) *Resistance unbalance.* (i) The direct current resistance unbalance between the two conductors of any pair in a

completed cable and the average resistance unbalance of all pairs in a completed cable must comply with the requirements specified in ANSI/ICEA S-84–608–1988, paragraph 8.2.

(ii) The resistance unbalance between tip and ring conductors shall be random with respect to the direction of unbalance. That is, the resistance of the tip conductors shall not be consistently higher with respect to the ring conductors and vice versa.

(3) *Mutual capacitance*. The average mutual capacitance of all pairs in a completed cable and the individual mutual capacitance of any pair in a completed cable must comply with the requirements specified in ANSI/ICEA S-84–608–1988, paragraph 8.3.

(4) *Capacitance difference*. (i) The capacitance difference for completed cables having 75 pairs or greater must comply with the requirement specified in ANSI/ICEA S-84–608–1988, paragraph 8.4.

(ii) When measuring screened cable, the inner and outer pairs must be selected from both sides of the screen.

(5) *Pair-to-pair capacitance unbalance*—(i) *Pair-to-pair*. The capacitance unbalance as measured on the completed cable must comply with the requirements specified in ANSI/ICEA S-84–608–1988, paragraph 8.5.

(ii) *Screened cable*. In cables with 25 pairs or less and within each group of multigroup cables, the pair-to-pair capacitance unbalance between any two pairs in an individual compartment must comply with the requirements specified in ANSI/ICEA S-84–608–1988, paragraph 8.5. The pair-to-pair capacitance unbalances to be considered must be:

(A) Between pairs adjacent in a layer in an individual compartment;

(B) Between pairs in centers of 4 pairs or less in an individual compartment; and

(C) Between pairs in adjacent layers in an individual compartment when the number of pairs in the inner (smaller) layer is 6 or less. The center is counted as a layer.

(iii) In cables with 25 pairs or less, the root-mean-square (rms) value is to include all the pair-to-pair unbalances measured for each compartment separately.

(iv) In cables containing more than 25 pairs, the rms value must include the pair-to-pair unbalances in the separate compartments.

(6) *Pair-to-ground capacitance unbalance*—(i) *Pair-to-ground*. The capacitance unbalance as measured on the completed cable must comply with the requirements specified in ANSI/ICEA S-84–608–1988, paragraph 8.6.

(ii) When measuring pair-to-ground capacitance unbalance all pairs except the pair under test are grounded to the shield and/or shield/armor except when measuring cables containing super units in which case all other pairs in the same super unit must be grounded to the shield.

(iii) The screen tape must be left floating during the test.

(iv) Pair-to-ground capacitance unbalance may vary directly with the length of the cable.

(7) *Attenuation*. (i) For nonscreened and screened cables, the average attenuation of all pairs on any reel when measured at 150 and 772 kilohertz must comply with the requirements specified in ANSI/ICEA S-84–608–1988, paragraph 8.7, Foam and/or Foam-Skin Column.

(ii) For T1C type cables over 12 pairs, the maximum average attenuation of all pairs on any reel must not exceed the values listed below when measured at a frequency of 1576 kilohertz at or corrected to a temperature of 20 ±1 °C. The test must be conducted in accordance with ASTM D 4566–90.

AWG	Maximum Average Attenuation decibel/kilometer (dB/km) (decibel/mile)
19	14.9 (24.0)
22	21.6 (34.8)
24	27.2 (43.8)

(8) *Crosstalk loss*. (i) The equal level far-end power sum crosstalk loss (FEXT) as measured on the completed cable must comply with the requirements specified in ANSI/ICEA S-84–608–1988, paragraph 8.8, FEXT Table.

(ii) The near-end power sum crosstalk loss (NEXT) as measured on completed cable must comply with the requirements specified in ANSI/ICEA S-84–608–1988, paragraph 8.8, NEXT Table.

(iii) *Screened cable.* (A) For screened cables the NEXT as measured on the completed cable must comply with the requirements specified in ANSI/ICEA S-84–608–1988, paragraphs 8.9 and 8.9.1.

(B) For T1C screened cable the NEXT as measured on the completed cable must comply with the requirements specified in ANSI/ICEA S-84–608–1988, paragraphs 8.9 and 8.9.2.

(9) *Insulation resistance.* The insulation resistance of each insulated conductor in a completed cable must comply with the requirement specified in ANSI/ICEA S-84–608–1988, paragraph 8.11.

(10) *High voltage test.* (i) In each length of completed cable, the insulation between conductors must comply with the requirements specified in ANSI/ICEA S-84–608–1988, paragraph 8.12, Foam and/or Foam-Skin Column.

(ii) In each length of completed cable, the dielectric between the shield and/or armor and conductors in the core must comply with the requirements specified in ANSI/ICEA S-84–608–1988, paragraph 8.13, Single Jacketed, Foam and/or Foam-Skin Column. In screened cable the screen tape must be left floating.

(iii) *Screened cable.* (A) In each length of completed screened cable, the dielectric between the screen tape and the conductors in the core must comply with the requirement specified in ANSI/ICEA S-84–608–1988, paragraph 8.14.

(B) In this test, the cable shield and/or armor must be left floating.

(11) *Electrical variations.* (i) Pairs in each length of cable having either a ground, cross, short, or open circuit condition will not be permitted.

(ii) The maximum number of pairs in a cable which may vary as specified in paragraph (k)(11)(iii) of this section from the electrical parameters given in this section are listed below. These pairs may be excluded from the arithmetic calculation.

Nominal Pair Count	Maximum Number of Pairs With Allowable Electrical Variation
6–100	1
101–300	2
301–400	3
401–600	4
601 and above	6

(iii) *Parameter variations.* (A) *Capacitance unbalance-to-ground.* If the cable fails either the maximum individual pair or average capacitance unbalance-to-ground requirement and all individual pairs are 3937 picofarad/kilometer (1200 picofarad/1000 feet) or less, the number of pairs specified in paragraph (k)(11)(ii) of this section may be eliminated from the average and maximum individual calculations.

(B) *Resistance unbalance.* Individual pair of 7 percent for all gauges.

(C) *Conductor resistance, maximum.* The following table shows maximum conductor resistance:

AWG	ohms/kilometer	(ohms/1000 feet)
19	29.9	(9.1)
22	60.0	(18.3)
24	94.5	(28.8)
26	151.6	(46.2)

NOTE: RUS recognizes that in large pair count cable (600 pair and above) a cross, short, or open circuit condition occasionally may develop in a pair which does not affect the performance of the other cable pairs. In these circumstances rejection of the entire cable may be economically unsound or repairs may be impractical. In such circumstances the manufacturer may desire to negotiate with the customer for acceptance of the cable. No more than 0.5 percent of the pairs may be involved.

(l) *Mechanical requirements*—(1) *Compound flow test.* All cables manufactured in accordance with the requirements of this section must be capable of meeting the compound flow test specified in ANSI/ICEA S-84–608–1988, paragraph 9.1 using a test temperature of 80 ±1 °C.

(2) *Water penetration test.* All cables manufactured in accordance with the requirements of this section must be capable of meeting the water penetration test specified in ANSI/ICEA S-84–608–1988, paragraph 9.2.

(3) *Cable cold bend test.* All cables manufactured in accordance with the requirements of this section must be capable of meeting the cable cold bend test specified in ANSI/ICEA S-84–608–1988, paragraph 9.3.

(4) *Cable impact test*. All cables manufactured in accordance with the requirements of this section must be capable of meeting the cable impact test specified in ANSI/ICEA S-84–608–1988, paragraph 9.4.

(5) *Jacket notch test (CACSP sheath only)*. All cables utilizing the coated aluminum/coated steel sheath (CACSP) design manufactured in accordance with the requirements of this section must be capable of meeting the jacket notch test specified in ANSI/ICEA S-84–608–1988, paragraph 9.5.

(6) *Cable torsion test (CACSP sheath only)*. All cables utilizing the coated aluminum/coated steel sheath (CACSP) design manufactured in accordance with the requirements of this section must be capable of meeting the cable torsion test specified in ANSI/ICEA S-84–608–1988, paragraph 9.6.

(m) *Sheath slitting cord (optional)*. (1) Sheath slitting cord may be used in the cable structure at the option of the manufacturer unless specified by the end user.

(2) When a sheath slitting cord is used it must be nonhygroscopic and nonwicking, continuous throughout a length of cable and of sufficient strength to open the sheath without breaking the cord.

(n) *Identification marker and length marker*. (1) Each length of cable must be identified in accordance with ANSI/ICEA S-84–608–1988, paragraphs 10.1 through 10.1.4. The color of the ink used for the initial outer jacket marking must be either white or silver.

(2) The markings must be printed on the jacket at regular intervals of not more than 0.6 meter (2 feet).

(3) The completed cable must have sequentially numbered length markers in accordance with ANSI/ICEA S-84–608–1988, paragraph 10.1.5. The color of the ink used for the initial outer jacket marking must be either white or silver.

(o) *Preconnectorized cable (optional)*. (1) At the option of the manufacturer and upon request by the purchaser, cables 100 pairs and larger may be factory terminated in 25 pair splicing modules.

(2) The splicing modules must meet the requirements of RUS Bulletin 345–54, PE-52, RUS Specification for Telephone Cable Splicing Connectors (Incorporated by Reference at §1755.97), and be accepted by RUS prior to their use.

(p) *Acceptance testing and extent of testing*. (1) The tests described in appendix A of this section are intended for acceptance of cable designs and major modifications of accepted designs. What constitutes a major modification is at the discretion of RUS. These tests are intended to show the inherent capability of the manufacturer to produce cable products having long life and stability.

(2) For initial acceptance, the manufacturer must submit:

(i) An original signature certification that the product fully complies with each section of the specification;

(ii) Qualification Test Data, per appendix A of this section;

(iii) To periodic plant inspections;

(iv) A certification that the product does or does not comply with the domestic origin manufacturing provisions of the ''Buy American'' requirements of the Rural Electrification Act of 1938 (7 U.S.C. 901 *et seq.*);

(v) Written user testimonials concerning field performance of the product; and

(vi) Other nonproprietary data deemed necessary by the Chief, Outside Plant Branch (Telephone).

(3) For requalification acceptance, the manufacturer must submit an original signature certification that the product fully complies with each section of the specification, excluding the Qualification Section, and a certification that the product does or does not comply with the domestic origin manufacturing provisions of the ''Buy American'' requirements of the Rural Electrification Act of 1938 (7 U.S.C. 901 *et seq.*), for acceptance by August 30 of each year. The required data must have been gathered within 90 days of the submission. If the initial acceptance of a product to this specification was within 180 days of August 30, then requalification for that product will not be required for that year.

(4) Initial and requalification acceptance requests should be addressed to:

Chairman, Technical Standards Committee ''A'' (Telephone), Telecommunications Standard Division, Rural Utilities Service, Washington, DC 20250–1500.

(5) *Tests on 100 percent of completed cable.* (i) The shield and/or armor of each length of cable must be tested for continuity in accordance with ANSI/ICEA S-84–608–1988, paragraph 8.16.

(ii) The screen tape of each length of screened cable must be tested for continuity in accordance with ANSI/ICEA S-84–608–1988, paragraph 8.16.

(iii) Dielectric strength between conductors and shield and/or armor must be tested to determine freedom from grounds in accordance with paragraph (k)(10)(ii) of this section.

(iv) Dielectric strength between conductors and screen tape must be tested to determine freedom from grounds in accordance with paragraph (k)(10)(iii) of this section.

(v) Each conductor in the completed cable must be tested for continuity in accordance with ANSI/ICEA S-84–608–1988, paragraph 8.16.

(vi) Dielectric strength between conductors, in each length of completed cable, must be tested to insure freedom from shorts and crosses in each length of completed cable in accordance with paragraph (k)(10)(i) of this section.

(vii) Each conductor in the completed preconnectorized cable must be tested for continuity.

(viii) Each length of completed preconnectorized cable must be tested for split pairs.

(ix) The average mutual capacitance must be measured on all cables. If the average mutual capacitance for the first 100 pairs tested from randomly selected groups is between 50 and 53 nanofarads/kilometer (nF/km) (80 and 85 nanofarad/mile), the remainder of the pairs need not be tested on the 100 percent basis (See paragraph (k)(3) of this section).

(6) *Capability tests.* Tests on a quality assurance basis must be made as frequently as is required for each manufacturer to determine and maintain compliance with:

(i) Performance requirements for conductor insulation, jacketing material, and filling and flooding compounds;

(ii) Bonding properties of coated or laminated shielding and armoring materials and performance requirements for screen tape;

(iii) Sequential marking and lettering;

(iv) Capacitance difference, capacitance unbalance, crosstalk, and attenuation;

(v) Insulation resistance, conductor resistance, and resistance unbalance;

(vi) Cable cold bend and cable impact tests;

(vii) Water penetration and compound flow tests; and

(viii) Jacket notch and cable torsion tests.

(q) *Summary of records of electrical and physical tests.* (1) Each manufacturer must maintain suitable summary records for a period of at least 3 years of all electrical and physical tests required on completed cable by this section as set forth in paragraphs (p)(5) and (p)(6) of this section. The test data for a particular reel must be in a form that it may be readily available to the purchaser or to RUS upon request.

(2) Measurements and computed values must be rounded off to the number of places or figures specified for the requirement according to ANSI/ICEA S-84–608–1988, paragraph 1.3.

(r) *Manufacturing irregularities.* (1) Repairs to the shield and/or armor are not permitted in cable supplied to end users under this section.

(2) Minor defects in jackets (defects having a dimension of 3 millimeters (0.125 inch.) or less in any direction) may be repaired by means of heat fusing in accordance with good commercial practices utilizing sheath grade compounds.

(s) *Preparation for shipment.* (1) The cable must be shipped on reels. The diameter of the drum must be large enough to prevent damage to the cable from reeling or unreeling. The reels must be substantial and so constructed as to prevent damage to the cable during shipment and handling.

(2) The thermal wrap must comply with the requirements of ANSI/ICEA S-84–608–1988, paragraph 10.3. When a thermal reel wrap is supplied, the wrap must be applied to the reel and must be suitably secured in place to minimize thermal exposure to the cable during storage and shipment. The use of the thermal reel wrap as a means of reel protection will be at the option of the

manufacturer unless specified by the end user.

(3) The outer end of the cable must be securely fastened to the reel head so as to prevent the cable from becoming loose in transit. The inner end of the cable must be securely fastened in such a way as to make it readily available if required for electrical testing. Spikes, staples, or other fastening devices which penetrate the cable jacket must not be used. The method of fastening the cable ends must be acceptable to RUS and accepted prior to its use.

(4) Each length of cable must be wound on a separate reel unless otherwise specified or agreed to by the purchaser.

(5) The arbor hole must admit a spindle 63 millimeters (2.5 inches) in diameter without binding. Steel arbor hole liners may be used but must be accepted by RUS prior to their use.

(6) Each reel must be plainly marked to indicate the direction in which it should be rolled to prevent loosening of the cable on the reel.

(7) Each reel must be stenciled or labeled on either one or both sides with the information specified in ANSI/ICEA S-84–608–1988, paragraph 10.4 and the RUS cable designation:

Cable Designation

BFCE
Cable Construction
Pair Count
Conductor Gauge

E = Expanded Insulation
A = Coated Aluminum Shield
C = Copper Shield
Y = Gopher Resistant Shield
X = Armored, Separate Shield
H = T1 Screened Cable
H1C = T1C Screened Cable
P = Preconnectorized

Example: BFCEXH100–22

Buried Filled Cable, Expanded Insulation, Armored (w/separate shield), T1 Screened Cable, 100 pair, 22 AWG.

(8) When cable manufactured to the requirements of this specification is shipped, both ends must be equipped with end caps acceptable to RUS.

(9) When preconnectorized cables are shipped, the splicing modules must be protected to prevent damage during shipment and handling. The protection method must be acceptable to RUS and accepted prior to its use.

(10) All cables ordered for use in underground duct applications must be equipped with a factory-installed pulling-eye on the outer end in accordance with ANSI/ICEA S-84–608–1988, paragraph 10.5.2.

(The information and recordkeeping requirements of this section have been approved by the Office of Management and Budget (OMB) under the control number 0572–0059)

APPENDIX A TO § 1755.890—QUALIFICATION TEST METHODS

(I) The test procedures described in this appendix are for qualification of initial cable designs and major modifications of accepted designs. Included in (V) of this appendix are suggested formats that may to be used in submitting test results to RUS.

(II) *Sample selection and preparation*. (1) All testing must be performed on lengths removed sequentially from the same 25 pair, 22 gauge jacketed cable. This cable must not have been exposed to temperatures in excess of 38 °C since its initial cool down after sheathing. The lengths specified are minimum lengths and if desirable from a laboratory testing standpoint longer lengths may be used.

(a) Length A must be 10 ±0.2 meters (33 ±0.5 feet) long and must be maintained at 23 ±3 °C. One length is required.

(b) Length B must be 12 ±0.2 meters (40 ±0.5 feet) long. Prepare the test sample by removing the jacket, shield or shield/armor, and core wrap for a sufficient distance on both ends to allow the insulated conductors to be flared out. Remove sufficient conductor insulation so that appropriate electrical test connections can be made at both ends. Coil the sample with a diameter of 15 to 20 times its sheath diameter. Three lengths are required.

(c) Length C must be one meter (3 feet) long. Four lengths are required.

(d) Length D must be 300 millimeters (1 foot) long. Four lengths are required.

(e) Length E must be 600 millimeters (2 feet) long. Four lengths are required.

(f) Length F must be 3 meters (10 feet) long and must be maintained at 23 ±3 °C for the duration of the test. Two lengths are required.

(2) *Data reference temperature*. Unless otherwise specified, all measurements must be made at 23 ±3 °C.

(III) *Environmental tests*—(1) *Heat aging test*—(a) *Test samples*. Place one sample each of lengths B, C, D, and E in an oven or environmental chamber. The ends of Sample B must exit from the chamber or oven for electrical tests. Securely seal the oven exit holes.

(b) *Sequence of tests.* The samples are to be subjected to the following tests after conditioning:

(i) Water Immersion Test outlined in (III)(2) of this appendix;

(ii) Water Penetration Test outlined in (III)(3) of this appendix;

(iii) Insulation Compression Test outlined in (III)(4) of this appendix; and

(iv) Jacket Slip Strength Test outlined in (III)(5) of this appendix.

(c) *Initial Measurements.* (i) For Sample B measure the open circuit capacitance for each odd numbered pair at 1, 150, and 772 kilohertz, and the attenuation at 150 and 772 kilohertz after conditioning the sample at the data reference temperature for 24 hours. Calculate the average and standard deviation for the data of the 13 pairs on a per kilometer or (on a per mile) basis.

(ii) The attenuation at 150 and 772 kilohertz may be calculated from open circuit admittance (Yoc) and short circuit impedance (Zsc) or may be obtained by direct measurement of attenuation.

(iii) Record on suggested formats in (V) of this appendix or on other easily readable formats.

(d) *Heat conditioning.* (i) Immediately after completing the initial measurements, condition the sample for 14 days at a temperature of 65 ±2 °C.

(ii) At the end of this period note any exudation of cable filler. Measure and calculate the parameters given in (III)(1)(c) of this appendix. Record on suggested formats in (V) of this appendix or other easily readable formats.

(iii) Cut away and discard a one meter (3 foot) section from each end of length B.

(e) *Overall electrical deviation.* (i) Calculate the percent change in all average parameters between the final parameters after conditioning and the initial parameters in (III)(1)(c) of this appendix.

(ii) The stability of the electrical parameters after completion of this test must be within the following prescribed limits:

(A) *Capacitance.* The average mutual capacitance must be within 5 percent of its original value;

(B) The change in average mutual capacitance must be less than 5 percent over frequency 1 to 150 kilohertz; and

(C) *Attenuation.* The 150 and 772 kilohertz attenuation must not have increased by more than 5 percent over their original values.

(2) *Water immersion electrical test*—(a) *Test sample selection.* The 10 meter (33 foot) section of length B must be tested.

(b) *Test sample preparation.* Prepare the sample by removing the jacket, shield or shield/armor, and core wrap for sufficient distance to allow one end to be accessed for test connections. Cut out a series of 6 millimeter (0.25 inch.) diameter holes along the test sample, at 30 centimeters (1 foot) intervals progressing successively 90 degrees around the circumference of the cable. Assure that the cable core is exposed at each hole by slitting the core wrapper. Place the prepared sample in a dry vessel which when filled will maintain a one meter (3 foot) head of water over 6 meters (20 feet) of uncoiled cable. Extend and fasten the ends of the cable so they will be above the water line and the pairs are rigidly held for the duration of the test.

(c) *Capacitance testing.* Measure the initial values of mutual capacitance of all odd pairs in each cable at a frequency of 1 kilohertz before filling the vessel with water. Be sure the cable shield or shield/armor is grounded to the test equipment. Fill the vessels until there is a one meter (3 foot) head of water on the cables.

(i) Remeasure the mutual capacitance after the cables have been submerged for 24 hours and again after 30 days.

(ii) Record each sample separately on suggested formats attached or on other easily readable formats.

(d) *Overall electrical deviation.* (i) Calculate the percent change in all average parameters between the final parameters after conditioning with the initial parameters in (III)(2)(c) of this appendix.

(ii) The average mutual capacitance must be within 5 percent of its original value.

(3) *Water penetration testing.* (a) A watertight closure must be placed over the jacket of length C. The closure must not be placed over the jacket so tightly that the flow of water through pre-existing voids of air spaces is restricted. The other end of the sample must remain open.

(b) Test per Option A or Option B—(i) *Option A.* Weigh the sample and closure prior to testing. Fill the closure with water and place under a continuous pressure of 10 ±0.7 kilopascals (1.5 ±0.1 pounds per square inch gauge) for one hour. Collect the water leakage from the end of the test sample during the test and weigh to the nearest 0.1 gram. Immediately after the one hour test, seal the ends of the cable with a thin layer of grease and remove all visible water from the closure, being careful not to remove water that penetrated into the core during the test. Reweigh the sample and determine the weight of water that penetrated into the core. The weight of water that penetrated into the core must not exceed 6 grams.

(ii) *Option B.* Fill the closure with a 0.2 gram sodium fluorscein per liter water solution and apply a continuous pressure 10 ±0.7 kilopascals (1.5 ±0.1 pounds per square inch gauge) for one hour. Catch and weigh any water that leaks from the end of the cable during the one hour period. If no water leaks from the sample, carefully remove the water from the closure. Then carefully remove the jacket, shield or shield/ armor, and core wrap

one at a time, examining with an ultraviolet light source for water penetration. After removal of the core wrap, carefully dissect the core and examine for water penetration within the core. Where water penetration is observed, measure the penetration distance. The distance of water penetration into the core must not exceed 127 millimeters (5.0 inches).

(4) *Insulation compression test*—(a) *Test sample D*. Remove jacket, shield or shield/armor, and core wrap being careful not to damage the conductor insulation. Remove one pair from the core and carefully separate, wipe off core filler and straighten the insulated conductors. Retwist the two insulated conductors together under sufficient tension to form 10 evenly spaced 360 degree twists in a length of 10 centimeters (4 inches).

(b) *Sample testing*. Center the mid 50 millimeters (2 inches) of the twisted pair between 2 smooth rigid parallel metal plates that are 50 millimeters × 50 millimeters (2 inches × 2 inches). Apply a 1.5 volt direct current potential between the conductors, using a light or buzzer to indicate electrical contact between the conductors. Apply a constant load of 67 newtons (15 pound-force) on the sample for one minute and monitor for evidence of contact between the conductors. Record results on suggested formats in (V) of this appendix or on other easily readable formats.

(5) *Jacket slip strength test*—(a) *Sample selection*. Test Sample E from (III)(1)(a) of this appendix.

(b) *Sample preparation*. Prepare test sample in accordance with the procedures specified in ASTM D 4565–90a.

(c) *Sample conditioning and testing*. Remove the sample from the tensile tester prior to testing and condition for one hour at 50 ±2 °C. Test immediately in accordance with the procedures specified in ASTM D 4565–90a. A minimum jacket slip strength of 67 newtons (15 pound-force) is required. Record the highest load attained.

(6) *Humidity exposure*. (a) Repeat steps (III)(1)(a) through (III)(1)(c)(iii) of this appendix for separate set of samples B, C, D, and E which have not been subjected to prior environmental conditioning.

(b) Immediately after completing the measurements, expose the test sample to 100 temperature cyclings. Relative humidity within the chamber must be maintained at 90 ±2 percent. One cycle consists of beginning at a stabilized chamber and test sample temperature of 52 ±1 °C, increasing the temperature to 57 ±1 °C, allowing the chamber and test samples to stabilize at this level, then dropping the temperature back to 52 ±1 °C.

(c) Repeat steps (III)(1)(d)(ii) through (III)(5)(c) of this appendix.

(7) *Temperature cycling*. (a) Repeat steps (III)(1)(a) through (III)(1)(c)(iii) of this appendix for separate set of samples B, C, D, and E which have not been subjected to prior environmental conditioning.

(b) Immediately after completing the measurements, subject the test sample to the 10 cycles of temperature between a minimum of −40 °C and +60 °C. The test sample must be held at each temperature extreme for a minimum of 1 1/2 hours during each cycle of temperature. The air within the temperature cycling chamber must be circulated throughout the duration of the cycling.

(c) Repeat steps (III)(1)(d)(ii) through (III)(5)(c) of this appendix.

(IV) *Control sample*—(1) *Test samples*. A separate set of lengths A, C, D, E, and F must have been maintained at 23 ±3 °C for at least 48 hours before the testing.

(2) Repeat steps (III)(2) through (III)(5)(c) of this appendix except use length A instead of length B.

(3) *Surge test*. (a) One length of sample F must be used to measure the breakdown between conductors while the other length of F must be used to measure the core to shield breakdown.

(b) The samples must be capable of withstanding without damage, a single surge voltage of 15 kilovolts peak between conductors, and a 25 kilovolts peak surge voltage between conductors and the shield or shield/armor as hereinafter described. The surge voltage must be developed from a capacitor discharged through a forming resistor connected in parallel with the dielectric of the test sample. The surge generator constants must be such as to produce a surge of 1.5 × 40 microsecond wave shape.

(c) The shape of the generated wave must be determined at a reduced voltage by connecting an oscilloscope across the forming resistor with the cable sample connected in parallel with the forming resistor. The capacitor bank is charged to the test voltage and then discharged through the forming resistor and test sample. The test sample will be considered to have passed the test if there is no distinct change in the wave shape obtained with the initial reduced voltage compared to that obtained after the application of the test voltage.

(V) The following suggested formats may be used in submitting the test results to RUS:

ENVIRONMENTAL CONDITIONING_____

FREQUENCY 1 KILOHERTZ

Pair Number	Capacitance nF/km (nanofarad/mile)	
	Initial	Final
1		
3		
5		
7		
9		
11		
13		
15		
17		
19		
21		
23		
25		
Average x̄		

Overall Percent Difference in Average x̄ _____

ENVIRONMENTAL CONDITIONING_____

FREQUENCY 150 KILOHERTZ

Pair Number	Capacitance nF/km (nanofarad/mile)		Attenuation dB/km (decibel/mile)	
	Initial	Final	Initial	Final
1				
3				
5				
7				
9				
11				
13				
15				
17				
19				
21				
23				
25				
Average x̄				

Overall Percent Difference in Average x̄ Capacitance:_____ Conductance:_____

ENVIRONMENTAL CONDITIONING_____

FREQUENCY 772 KILOHERTZ

Pair Number	Capacitance nF/km (nanofarad/mile)		Attenuation dB/km (decibel/mile)	
	Initial	Final	Initial	Final
1				
3				
5				
7				
9				
11				
13				
15				
17				
19				
21				
23				
25				
Average x̄				

Overall Percent Difference in Average x̄ Capacitance:_____ Conductance:_____

ENVIRONMENTAL CONDITIONING_____

WATER IMMERSION TEST (1 KILOHERTZ)

Pair Number	Capacitance nF/km (nanofarad/mile)		
	Initial	24 Hours	Final
1			
3			
5			
7			
9			
11			
13			
15			
17			
19			
21			
23			
25			
Average x̄			

Overall Percent Difference in Average x̄ _____

WATER PENETRATION TEST

	Option A		Option B	
	End Leakage grams	Weight Gain grams	End Leakage grams	Penetration mm (in.)
Control.				
Heat Age.				
Humidity Exposure.				
Temperature Cycling.				

INSULATION COMPRESSION

	Failures
Control	
Heat Age	
Humidity Exposure	
Temperature Cycling	

JACKET SLIP STRENGTH @ 50 °C

	Load in newtons (pound-force)
Control	
Heat Age	
Humidity Exposure	

JACKET SLIP STRENGTH @ 50 °C—Continued

	Load in newtons (pound-force)
Temperature Cycling	_____

FILLER EXUDATION (GRAMS)

Heat Age	_____
Humidity Exposure	_____
Temperature Cycling	_____

SURGE TEST (KILOVOLTS)

Conductor to Conductor	_____
Shield to Conductors	_____

[58 FR 29328, May 20, 1993, as amended at 60 FR 1711, Jan. 5, 1995; 69 FR 18803, Apr. 9, 2004]

§ 1755.900 RUS specification for filled fiber optic cables.

(a) *Scope*. (1) This section covers the requirement for filled fiber optic cables intended for aerial installation either by attachment to a support strand or by an integrated self-supporting arrangement, for underground application by placement in a duct, or for buried installations either by trenching or by direct plowing.

(i) The optical waveguides are glass fibers having directly-applied protective coatings, and are called ''fibers'', herein. These fibers may be assembled in either loose fiber bundles with a protective core tube, encased in several protective buffer tubes, or in tight buffer tubes.

(ii) Fillers, strength members, core wraps, and bedding tapes may complete the cable core.

(iii) The core or buffer tubes containing the fibers and the interstices between the buffer tubes, fillers, and strength members in the core structure are filled with a suitable material to exclude water.

(iv) The cable structure is completed by an extruded overall plastic jacket. This jacket may have strength members embedded in it, in some designs.

(v) Buried installation requires an armor under the outer jacket.

(vi) For self-supporting cable the outer jacket may be extruded over the support messenger and cable core.

(2) The cable is fully color coded so that each fiber is distinguishable from every other fiber. A basic color scheme of twenty-four colors allows individual fiber identification. Colored tubes, binders, threads, stripings, or markings provide fiber group identification.

(3) Cable manufactured to this section must demonstrate compliance with the qualification testing requirements to ensure satisfactory end-use performance characteristics for the intended applications.

(4) Optical cable designs not specifically addressed by this section may be allowed if accepted by RUS. Justification for acceptance of a modified design must be provided to substantiate product utility and long term stability and endurance.

(5) All cables sold to RUS borrowers for projects involving RUS loan funds under this section must be accepted by RUS Technical Standards Committee ''A'' (Telephone). For cables manufactured to the specification of this section, all design changes to an accepted design must be submitted for acceptance. RUS will be the sole authority on what constitutes a design change.

(6) The American National Standard Institute/Institute of Electrical and Electronics Engineers, Inc (ANSI/IEEE), 1993 National Electrical Safety Code (NESC) referenced in this section is incorporated by reference by RUS. This incorporation by reference was approved by the Director of the Federal Register in accordance with 5 U.S.C. 552(a) and 1 CFR part 51. Copies of ANSI/IEEE 1993 NESC are available for inspection during normal business hours at RUS, room 2845, U.S. Department of Agriculture, Washington, DC 20250–1500, or at the National Archives and Records Administration (NARA). For information on the availability of this material at NARA, call 202–741–6030, or go to: *http://www.archives.gov/federal_register/code_of_federal_regulations/ibr_locations.html*. Copies are available from IEEE Service Center, 445 Hoes Lane, Piscataway, NJ 08854, telephone number 1 (800) 678–4333.

(7) American Society for Testing and Materials Specifications (ASTM) A 640–91, Standard Specification for Zinc-Coated Steel Strand for Messenger Support of Figure 8 Cable; ASTM B 736–92a, Standard Specification for Aluminum, Aluminum Alloy, and Aluminum-Clad Steel Cable Shielding

Stock; ASTM D 1238–90b, Standard Test Method for Flow Rates of Thermoplastics by Extrusion Plastometer; ASTM D 1248–84 (1989), Standard Specification for Polyethylene Plastic Molding and Extrusion Materials, ASTM D 1535–89, Standard Test Method for Specifying Color by the Munsell System; ASTM D 3349–86, Standard Test Method for Absorption Coefficient of Carbon Black Pigmented Ethylene Plastic; ASTM D 4565–90a, Standard Test Methods for Physical and Environmental Performance Properties of Insulations and Jackets for Telecommunications Wire and Cable; ASTM D 4566–90, Standard Test Methods for Electrical Performance Properties of Insulations and Jackets for Telecommunications Wire and Cable; ASTM D 4568–86, Standard Test Methods for Evaluating Compatibility Between Cable Filling and Flooding Compounds and Polyolefin Cable Materials; and ASTM E 29–90, Standard Practice for Using Significant Digits in Test Data to Determine Conformance with Specifications, referenced in this section are incorporated by reference by RUS. These incorporations by references were approved by the Director of the Federal Register in accordance with 5 U.S.C. 552(a) and 1 CFR part 51. Copies of ASTM standards are available for inspection during normal business hours at RUS, room 2845, U.S. Department of Agriculture, Washington, DC 20250–1500, or at the National Archives and Records Administration (NARA). For information on the availability of this material at NARA, call 202–741–6030, or go to: *http://www.archives.gov/federal_register/code_of_federal_regulations/ibr_locations.html*. Copies are available from ASTM, 1916 Race Street, Philadelphia, Pennsylvania 19103–1187, telephone number (215) 299–5585.

(8) Electronic Industries Association Standards (EIA)–455–20, Measurement of Change in Optical Transmittance; EIA–455–41, Compressive Loading Resistance of Fiber Optic Cables; EIA–455–86, Fiber Optic Cable Jacket Shrinkage; EIA–455–89A, Fiber Optic Cable Jacket Elongation And Tensile Strength; and EIA–455–174, Mode Field Diameter of Single-Mode Optical Fiber by Knife-Edge Scanning in the Far Field, referenced in this section are incorporated by reference by RUS. These incorporations by references were approved by the Director of the Federal Register in accordance with 5 U.S.C. 552(a) and 1 CFR part 51. Copies of EIA standards are available for inspection during normal business hours at RUS, room 2845, U.S. Department of Agriculture, Washington, DC 20250–1500, or at the National Archives and Records Administration (NARA). For information on the availability of this material at NARA, call 202–741–6030, or go to: *http://www.archives.gov/federal_register/code_of_federal_regulations/ibr_locations.html*. Copies are available from Global Engineering Documents, 15 Inverness Way East, Englewood, CO 80112, telephone number (303) 792–2181.

(9) Electronic Industries Association/Telecommunications Industries Association Standards (EIA/TIA)–455–25A, Repeated Impact Testing of Fiber Optic Cables and Cable Assemblies; EIA/TIA–455–30B, Frequency Domain Measurement of Multimode Optical Fiber Information Transmission Capacity; EIA/TIA–455–31B, Fiber Tensile Proof Test Method; EIA/TIA–455–37A, Low or High Temperature Bend Test for Fiber Optic Cable; EIA/TIA–455–45B, Method for Measuring Optical Fiber Geometry Using a Laboratory Microscope; EIA/TIA–455–46A, Spectral Attenuation Measurement for Long-Length, Graded-Index Optical Fibers; EIA/TIA–455–48B, Measurement of Optical Fiber Cladding Diameter Using Laser-Based Instruments; EIA/TIA–455–51A, Pulse Distortion Measurement of Multimode Glass Optical Fiber Information Transmission Capacity; EIA/TIA–455–53A, Attenuation by Substitution Measurement for Multimode Graded-Index Optical Fibers or Fiber Assemblies Used in Long Length Communications Systems; EIA/TIA–455–55B, End-View Methods for Measuring Coating and Buffer Geometry of Optical Fibers; EIA/TIA–455–58A, Core Diameter Measurement of Graded-Index Optical Fibers; EIA/TIA–455–59, Measurement of Fiber Point Defects Using an OTDR; EIA/TIA–455–61, Measurement of Fiber or Cable Attenuation Using an OTDR; EIA/TIA–455–78A,

Spectral-Attenuation Cutback Measurement for Single-Mode Optical Fibers; EIA/TIA–455–81A, Compound Flow (Drip) Test for Filled Fiber Optic Cable; EIA/TIA–455–82B, Fluid Penetration Test for Fluid-Blocked Fiber Optic Cable; EIA/TIA–455–85A, Fiber Optic Cable Twist Test; EIA/TIA–455–104A, Fiber Optic Cable Cyclic Flexing Test; EIA/TIA–455–164A, Single-Mode Fiber, Measurement of Mode Field Diameter by Far-Field Scanning; EIA/TIA–455–165A, Mode Field Diameter Measurement Near Field Scanning Technique; EIA/TIA–455–167A, Mode Field Diameter, Variable Aperture in the Far Field; EIA/TIA–455–168A, Chromatic Dispersion Measurement of Multimode Graded-Index and Single-Mode Optical Fibers by Spectral Group Delay Measurement in the Time Domain; EIA/TIA–455–169A, Chromatic Dispersion Measurement of Single-Mode Optical Fibers by the Phase-Shift Method; EIA/TIA–455–170, Cable Cutoff Wavelength of Single-Mode Fiber by Transmitted Power; EIA/TIA–455–173, Coating Geometry Measurement for Optical Fiber Side-View Method; EIA/TIA–455–175A, Chromatic Dispersion Measurement of Single-Mode Optical Fibers by the Differential Phase Shift Method; EIA/TIA–455–176, Method for Measuring Optical Fiber Cross-Sectional Geometry by Automated Grey-Scale Analysis; EIA/TIA–455–177A, Numerical Aperture Measurement of Graded-Index Optical Fibers; EIA/TIA–455–178, Measurements of Strip Force Required for Mechanically Removing Coatings from Optical Fibers; and EIA/TIA–598, Color Coding of Fiber Optic Cables, referenced in this section are incorporated by reference by RUS. These incorporations by references were approved by the Director of the Federal Register in accordance with 5 U.S.C. 552(a) and 1 CFR part 51. Copies of EIA/TIA standards are available for inspection during normal business hours at RUS, room 2845, U.S. Department of Agriculture, Washington, DC 20250–1500, or at the National Archives and Records Administration (NARA). For information on the availability of this material at NARA, call 202–741–6030, or go to: *http://www.archives.gov/federal_register/code_of_federal_regulations/ibr_locations.html*. Copies are available from Global Engineering Documents, 15 Inverness Way East, Englewood, CO 80112, telephone number (303) 792–2181.

(10) RUS intends that the optical fibers contained in the cables manufactured in accordance with this section have characteristics that will allow signals, having a range of wavelengths, to be carried simultaneously.

(b) *Optical fibers.* (1) The solid glass optical fibers must consist of a cylindrical core and cladding covered by either an ultraviolet-cured acrylate or other suitable coating.

(2) The optical fiber types must be one of the following:

(i) Dispersion-unshifted single mode fiber EIA Class IVa;

(ii) Dispersion-shifted single mode fiber EIA Class IVb;

(iii) 50/125 micrometer multimode fiber EIA Class Ia; or

(iv) 62.5/125 micrometer multimode fiber EIA Class Ia.

(3) The dispersion-unshifted single mode fiber core must have either a matched or depressed clad step refractive index profile with a mode-field diameter of 9.0±1.0 micrometers when measured at 1300 nanometers and 10.5+1.0 micrometers/−1.5 micrometers when measured at 1550 nanometers in accordance with any one of the following test methods:

(i) EIA/TIA–455–164A;

(ii) EIA/TIA–455–165A;

(iii) EIA/TIA–455–167A; or

(iv) EIA–455–174.

(4) The dispersion-shifted single mode fiber core must have either a segmented core design or depressed clad step refractive index profile with a mode-field diameter of 7.5+1.5 micrometers/−1.3 micrometers when measured at 1550 nanometers in accordance with any one of the test procedures specified in paragraph (b)(3) of this section.

(5) The core clad off-set of the dispersion-unshifted and dispersion-shifted single mode fibers must not be greater than 1.0 micrometer when measured in accordance with either EIA/TIA–455–45B or EIA/TIA–455–176.

(6) The multimode fiber cores must have graded (parabolic) refractive index profiles with core diameters of

50.0±3.0 micrometers or 62.5±3.0 micrometers when measured in accordance with either EIA/TIA–455–58A, or EIA/TIA–455–176.

(7) The core noncircularity of multimode fibers must not exceed 6 percent when measured in accordance with either EIA/TIA–455–45B or EIA/TIA–455–176.

(8) The outside diameter of the glass fiber for both single mode and multimode fibers must be 125±2.0 micrometers when measured in accordance with any one of the following test methods:

(i) EIA/TIA–455–45B;

(ii) EIA/TIA–455–176; or

(iii) EIA/TIA–455–48B, Methods A or B.

(9) The outside diameter of the glass fiber must be nominally concentric with the fiber core as is consistent with the best commercial practice.

(10) The individual fibers must be proof tested at a minimum tensile stress of 0.35 gigapascal for approximately one second when measured in accordance with EIA/TIA–455–31B.

(11) Factory splices of fibers are allowed provided that prior acceptance from RUS is obtained for the splice technique, that all splices are documented and reported to the customer and that the spliced fiber meets all requirements of this section.

(12) The optical fiber must be coated with a suitable material to preserve the intrinsic strength of the glass having an outside diameter of 250±15 micrometers when measured in accordance with either EIA/TIA–455–55B or EIA/TIA–455–173.

(13) The maximum force required to remove 25 millimeters of protective fiber coating must not exceed 13 newtons when measured in accordance with EIA/TIA–455–178.

(14) All optical fibers in any single length of cable must be of the same type.

(c) *Buffer/coating*. (1) The optical fibers contained in a tube buffer (loose tube), an inner jacket (unit core), a channel or otherwise loosely packaged must have a clearance between the fibers and the inside of the container sufficient to allow for thermal expansions without constraining the fibers. The protective container must be manufactured from a material having a coefficient of friction sufficiently low to allow the fibers free movement.

(2) Optical fibers covered in near contact with an extrusion (tight tube) must have an intermediate soft buffer to allow for thermal expansions and minor pressures.

(3) All protective coverings in any single length of cable must be continuous and be of the same material except at splice locations.

(4) The protective coverings must be free from holes, splits, blisters, and other imperfections and must be as smooth and concentric as is consistent with the best commercial practice.

(5) Repairs to the fiber coatings are not allowed except at splice locations.

(6) Both loose tube and tight tube coverings of each color and other fiber package types removed from the finished cable must meet the following shrinkback and cold bend performance requirements. The fibers may be left in the tubes.

(i) *Shrinkback*. Testing must be conducted in accordance with ASTM D 4565–90a, paragraph 14.1, using a talc bed at a temperature of 95 °C. Shrinkback must not exceed 5 percent of the original 150 millimeter length of the specimen. The total shrinkage of the specimen must be measured.

(ii) *Cold bend*. Testing must be conducted on at least one tube from each color in the cable. Stabilize the specimen to −20±1 °C for a minimum of four hours. While holding the specimen and mandrel at the test temperature, wrap the tube in a tight helix ten times around a mandrel with a diameter not greater than five times the tube diameter. The tube must show no evidence of cracking when observed with normal or corrected-to-normal vision.

NOTE: Channel cores and similar slotted single component core designs need not be tested for cold bend.

(d) *Fiber and buffer tube identification*. (1) The colors designated for identification of loose buffer tubes, tight tube buffer fibers and individual fibers in multifiber tubes, slots or bundles are shown in the following table:

Buffer tube and fiber No.	Color
1	Blue.
2	Orange.

Buffer tube and fiber No.	Color
3	Green.
4	Brown.
5	Slate.
6	White.
7	Red.
8	Black.
9	Yellow.
10	Violet.
11	Rose.
12	Aqua.
13	Blue/Black Tracer.
14	Orange/Black Tracer.
15	Green/Black Tracer.
16	Brown/Black Tracer.
17	Slate/Black Tracer.
18	White/Black Tracer.
19	Red/Black Tracer.
20	Black/Yellow Tracer.
21	Yellow/Black Tracer.
22	Violet/Black Tracer.
23	Rose/Black Tracer.
24	Aqua/Black Tracer.

(2) *Standards of color*. Except for the aqua color, the colors of fibers and tubes supplied in accordance with this section are specified in terms of the Munsell Color System (ASTM D 1535–89) and must comply with the color limits as defined in EIA/TIA–598. (A visual color standard meeting these requirements and entitled ''Munsell Color Charts for Color Coding,'' may be obtained from the Munsell Color Company, Inc., 2441 North Calvert Street, Baltimore, Maryland 21218. The latest edition of the color standard should be used.)

(i) The aqua color limits using the Munsell Color System must be as follows:

MUNSELL NOTATION

Symbol	Aqua color
Centroid	10BG 7/6
H++	5B 7/6
H– –	5BG 7/6
V++	10BG 8/4
V– –	10BG 6/6
C++	None
C– –	10BG 7/4

(ii) Other coloring schemes used for providing identification of buffer tubes and optical fibers which deviate from the requirements of paragraph (d)(1) of this section will not be accepted by RUS.

(e) *Strength members*. (1) Strength members must be an integral part of the cable construction, but are not considered part of the support messenger for self-supporting optical cable.

(2) The combined strength of all the strength members must be sufficient to support the stress of installation and to protect the cable in service.

(3) Strength members may be incorporated into the core as a central support member or filler, as fillers between the fiber packages, as an annular serving over the core, as an annular serving over the intermediate jacket, embedded in the outer jacket or as a combination of any of these methods.

(4) The central support member or filler must contain no more than one splice per kilometer of cable. Individual fillers placed between the fiber packages and placed as annular servings over the core must contain no more than one splice per kilometer of cable. Cable sections having central member or filler splices must meet the same physical requirements as unspliced cable sections.

(5) Strength member materials and splicing techniques must be accepted by RUS prior to their use.

(6) In each length of completed cable having a metallic central member, the dielectric strength between the armor and the metallic center member must withstand at least 15 kilovolts direct current for 3 seconds.

(f) *Forming the cable core*. (1) Protected fibers must be assembled with the optional central support member, fillers and strength members in such a way as to form a cylindrical group.

(2) The standard cylindrical group or core designs shall consist of 4, 6, 8, 10, 12, 16, 18, 20, or 24 fibers. Cylindrical groups or core designs larger than the sizes shown above must meet all the requirements of this section.

(3) When threads or tapes are used as core binders, they must be colored either white or natural and must be a nonhygroscopic and nonwicking dielectric material.

(4) When threads or tapes are used as unit binders to define optical fiber units in loose tube, tight tube, slotted, or bundled cored designs, they must be colored in accordance with the table listed below and must be a nonhygroscopic and nonwicking dielectric material or be rendered such by the filling compound. The colors of the binders must be in accordance with paragraphs

(d)(2) introductory text and (d)(2)(i) of this section.

Unit No.	Binder color
1	Blue.
2	Orange.
3	Green.
4	Brown.
5	Slate.
6	White.
7	Red.
8	Black.
9	Yellow.
10	Violet.
11	Rose.
12	Aqua.
13	Blue-Black.
14	Orange-Black.
15	Green-Black.
16	Brown-Black.
17	Slate-Black.
18	White-Black.
19	Red-Black.
20	Black-Black-Yellow.
21	Yellow-Yellow-Black.
22	Violet-Black.
23	Rose-Black.
24	Aqua-Black.

(g) *Filling compound*. (1) To prevent the ingress of water into the core, a filling compound must be applied into the interior of the loose fiber tubes and into the interstices of the core. When a core wrap is used, the filling compound must also be applied to the core wrap, over the core wrap and between the core wrap and inner jacket when required.

(2) The materials must be homogeneous and uniformly mixed; free from dirt, metallic particles and other foreign matter; easily removed; nontoxic and present no dermal hazards.

(3) The individual cable manufacturer must satisfy RUS that the filling compound selected for use is suitable for its intended application. The filling compound must be compatible with the cable components when tested in accordance with ASTM D 4568–86 at a temperature of 80 °C.

(h) *Core wrap (optional)*. (1) At the option of the manufacturer, one or more layers of nonhygroscopic and nonwicking dielectric material may be applied over the core.

(2) The core wrap(s) can be used to provide a heat barrier to prevent deformation or adhesion between the fiber tubes or can be used to contain the core.

(3) When core wraps are used, sufficient filling compound must be applied to the core wraps so that voids or air spaces existing between the core wraps and between the core the inner side of the core wrap are minimized.

(i) *Inner jacket*. (1) Inner jackets may be applied directly over the core or over the strength members.

(i) For armored cable an inner jacket is optional but recommended. The inner jacket may absorb stresses in the cable core that may be introduced by armor application or by armored cable installation.

(ii) For unarmored cable an inner jacket is optional.

(2) The inner jacket material and test requirements must be as for the outer jacket material per paragraphs (m)(3) introductory text through (m)(3)(v) of this section, except that either black or natural polyethylene may be used. In the case of natural polyethylene, the requirements for absorption coefficient and the inclusion of furnace black are waived.

(j) *Flooding compound*. (1) Sufficient flooding compound must be applied between the inner jacket and armor and between the armor and outer jacket so that voids and air spaces in these areas are minimized. The use of floodant between the armor and outer jacket is not required when uniform bonding, per paragraph (k)(10) of this section, is achieved between the plastic-clad armor and the outer jacket.

(2) The flooding compound must be compatible with the jacket when tested in accordance with ASTM D 4568–86 at a temperature of 80 °C. The floodant must exhibit adhesive properties sufficient to prevent jacket slip when tested in accordance with the requirements of appendix A, paragraph (III)(3), of this section.

(3) The individual cable manufacturer must satisfy RUS that the flooding compound selected for use is acceptable for the application.

(4) In lieu of a flooding compound, water blocking tapes may be applied between the inner jacket and armor and between the armor and outer jacket to prevent water migration. The use of the water blocking tape between the armor and outer jacket is not required when uniform bonding, per paragraph

(k)(10) of this section, is achieved between the plastic-clad armor and the outer jacket.

(k) *Armor*. (1) A steel armor, plastic coated on both sides, is required for direct buried cable manufactured under the provisions of this section. An armor is optional for duct and aerial cable as required by the purchaser. The plastic coated steel armor must be applied longitudinally directly over the core wrap or the intermediate jacket and have a minimum overlap of 3.0 millimeters.

(2) The uncoated steel tape must be electrolytic chrome coated steel (ECCS) with a thickness of 0.155 ±0.015 millimeters.

(3) The reduction in thickness of the armoring material due to the corrugating or to the application process must be kept to a minimum and must not exceed 10 percent at any spot.

(4) The armor of each length of cable must be electrically continuous with no more than one joint or splice allowed per kilometer of cable. This requirement does not apply to a joint or splice made in the raw material by the raw material manufacturer.

(5) The breaking strength of any section of an armor tape, containing a factory splice joint, must not be less than 80 percent of the breaking strength of an adjacent section of the armor of equal length without a joint.

(6) For cables containing no floodant over the armor, the overlap portions of the armor tape must be bonded in cables having a flat, noncorrugated armor to meet the requirements of paragraphs (q)(1) through (q)(7)(ii) of this section. If the tape is corrugated, the overlap portions of the armor tape must be sufficiently bonded and the corrugations must be sufficiently in register to meet the requirements of paragraphs (q)(1) through (q)(7)(ii) of this section.

(7) The armor tape must be so applied as to enable the cable to pass the bend test as specified in paragraph (q)(1) of this section.

(8) The protective coating on the steel armor must meet the Bonding-to-Metal, Heat Sealability, Lap-Shear and Moisture Resistance requirements of Type I, Class 2 coated metals in accordance with ASTM B 736–92a.

(9) The ability of the plastic-clad metal to resist the flooding compound must be determined as required by ASTM D 4568–86 using a one meter length of coated steel which must be aged for 7 days at 68±1 °C. There must be no delamination of the coating from the steel at the conclusion of the test.

(10) When the jacket is bonded to the plastic coated armor, the bond between the plastic coated armor and the outer jacket must not be less than 525 newtons per meter over at least 90 percent of the cable circumference when tested in accordance with ASTM D 4565–90a. For cables with strength members embedded in the jacket, and residing directly over the armor, the area of the armor directly under the strength member is excluded from the 90 percent calculation.

(l) *Optional support messenger (aerial cable)*. (1) When a self-supporting aerial cable containing an integrated support messenger is supplied, the support messenger must comply with the requirements specified in paragraphs (l)(2) introductory text through (l)(6) of this section.

(2) The fully flooded, stranded support messenger must be 6.35 millimeters diameter, 7 wire, extra high strength grade, Class A galvanized steel strand conforming to ASTM A 640–91 with exceptions and additional provisions as follows:

(i) The maximum lay of the individual wires of the strand must be 140 millimeters.

(ii) Any section of a completed strand containing a joint must have minimum tensile strength and elongation of 29,500 newtons and 3.5 percent, respectively, when tested in accordance with the procedures specified ASTM A 640–91.

(iii) The individual wires from a completed strand which contain joints must not fracture when tested according to the ''Ductility of Steel'' procedures specified in ASTM A 640–91 except that the mandrel diameter must be equal to 5 times the nominal diameter of the individual wires.

(3) The support strand must be completely covered with a corrosion protective floodant. The floodant must be homogeneous and uniformly mixed.

(4) The floodant must be nontoxic and present no dermal hazard.

(5) The floodant must be free from dirt, metallic particles, and other foreign matter that may interfere with the performance of the cable.

(6) The floodant must be compatible with the polyethylene outer jacket and must be acceptable to RUS.

(7) Other methods of providing self-supporting cable specifically not addressed in this section may be allowed if accepted by RUS. Justification for acceptance of a modified design must be provided to substantiate product utility and long term stability and endurance.

(m) *Outer jacket*. (1) The outer jacket must provide the cable with a tough, flexible, protective covering which can withstand exposure to sunlight, to atmosphere temperatures and to stresses reasonably expected in normal installation and service.

(2) The jacket must be free from holes, splits, blisters, or other imperfections and shall be as smooth and concentric as is consistent with the best commercial practice.

(3) The raw material used for the outer jacket must be one of the five types listed in paragraphs (m)(3)(i) through (m)(3)(v) of this section. The raw material must contain an antioxidant to provide long term stabilization and the materials must contain a 2.60±0.25 percent concentration of furnace black to provide ultraviolet shielding. Both the antioxidant and furnace black must be compounded into the material by the raw material supplier.

(i) Low density, high molecular weight polyethylene (LDHMW) must conform to the requirements of ASTM D 1248–84(1989), Type I, Class C, Category 4 or 5, Grade J3.

(ii) Low density, high molecular weight ethylene copolymer (LDHMW) must conform to the requirements of ASTM D 1248–84(1989), Type I, Class C, Category 4 or 5, Grade J3.

(iii) Linear low density, high molecular weight polyethylene (LLDHMW) must conform to the requirements of ASTM D 1248–84(1989), Type I, Class C, Category 4 or 5, Grade J3.

(iv) High density polyethylene (HD) must conform to the requirements of ASTM D 1248–84(1989), Type III, Class C, Category 4 or 5, Grade J4.

(v) Medium density polyethylene (MD) must conform to the requirements of ASTM D 1248–84(1989), Type II, Class C, Category 4 or 5, Grade J4.

(vi) Particle size of the carbon selected for use must not average greater than 20 nanometers.

(vii) Absorption coefficient must be a minimum of 400 in accordance with the procedures of ASTM D 3349–86.

(4) The outer jacketing material removed from or tested on the cable must be capable of meeting the following performance requirements:

Property	LLDHMW, ethylene copolymer	LDHMW polyethylene	HD or MD polyethylene
Melt Flow Rate:			
Percent increase from raw material, Maximum	.....	50	50
<0.41 (Initial Melt Index)	100		
0.41–2.00 (Initial Melt Index)		50	.....
Tensile Strength:			
Minimum, Megapascals	12	12	16.5
Ultimate Elongation:			
Minimum, Percent	400	400	300
Environmental Stress Cracking:			
Maximum, Failures	0/10	2/10	2/10
Shrinkback:			
Maximum, Percent	5	5	5
Impact:			
Maximum, Failures	2/10	2/10	2/10

(5) *Testing procedures*. The procedures for testing jacket specimens for compliance with paragraph (m)(4) of this section must be as follows:

(i) *Melt flow rate*. The melt flow rate must be determined by ASTM D 1238–90b, Condition E. Jacketing material

must be free from flooding and filling compound.

(ii) *Tensile strength and ultimate elongation*. Test in accordance with EIA–455–89A, using a jaw separation speed of 500 millimeters per minute for low density material and 50 millimeters per minute for high and medium density materials.

(iii) *Environmental stress cracking*. Test in accordance with ASTM D 4565–90a.

(iv) *Shrinkback*. Test in accordance with the procedures specified in EIA–455–86 using a temperature of 100 ±1 °C for a 4 hour period for low density material and a test temperature of 115 ±1 °C for a 4 hour period for high and medium density materials.

(v) *Impact*. The test must be performed in accordance with ASTM D 4565–90a using an impact force of 4 newton-meters at a temperature of −20 ±2 °C. A cracked or split jacket constitutes failure.

(6) *Jacket thickness*. The nominal outer jacket thickness must not be less than 1.3 millimeters. The test method used must either be the End Sample Method (paragraph (m)(6)(i) of this section) or the Continuous Uniformity Thickness Gauge Method (paragraph (m)(6)(ii) of this section).

(i) *End sample method*. The jacket must be capable of meeting the following requirements:

Minimum Average Thickness: 90 percent (%) of nominal thickness
Minimum Spot Thickness: 70 % of nominal thickness

(ii) *Continuous uniformity thickness gauge*. (A) The jacket must be capable of meeting the following requirements:

Minimum Average Thickness: 75 % of nominal thickness
Minimum Thickness: 70 % of nominal thickness
Maximum Eccentricity: 40 % of nominal thickness

$$\text{Eccentricity} = \frac{\text{Max. Thickness} - \text{Min. Thickness}}{\text{Average Thickness}} \times 100$$

(B) The maximum and minimum thickness values shall be based on the average of each axial section.

(7) For jackets having embedded strength members, the jacket thickness must meet the requirements of paragraph (m)(6) of this section except that the jacket thickness over the strength members must not be less than 0.50 millimeters.

(8) The minimum jacket thickness at any point over the support messenger for self-supporting aerial cable utilizing such an element must be 1.1 millimeters.

(9) The web dimension for self-supporting aerial cable utilizing such a feature must be as follows:

$$\text{Height: } 2.29 \pm 0.750 \text{ millimeters}$$

$$\text{Width: } 1.52 {}^{+0.51 \text{ millimeters}}_{-0.25 \text{ millimeters}}$$

(n) *Sheath slitting cord (optional)*. (1) A sheath slitting cord is optional.

(2) When a sheath slitting cord is used it must be nonhygroscopic and nonwicking or be rendered such by the filling or flooding compound, continuous throughout a length of cable and of sufficient strength to open the sheath over at least a one meter length without breaking the cord at a temperature of 23±5 °C.

(o) *Identification marker and length marker*. (1) Each length of cable must be permanently labeled either Optical Cable, OC, Optical Fiber Cable, or OF on the outer jacket and identified as to manufacturer and year of manufacture.

(2) Each length of cable intended for direct burial installation shall be marked with a telephone handset in compliance with Rule 350G of the 1993 National Electrical Safety Code (NESC).

(3) Mark the number of fibers on the jacket.

(4) The markings must be printed on the jacket at regular intervals of not more than 2 meters.

(5) An alternative method of marking may be used if acceptable to RUS.

(6) The completed cable must have sequentially numbered length markers in Meters or Feet at regular intervals of not more than 2 meters along the outside of the jacket.

(7) Continuous sequential numbering must be employed in a single length of cable.

(8) The numbers must be dimensioned and spaced to produce good legibility and must be approximately 3 millimeters in height. An occasional illegible marking is permissible if there is a legible marking located not more than 2 meters from it.

(9) The method of marking must be by means of suitable surface markings producing a clear distinguishable contrasting marking acceptable to RUS. Where direct or transverse printing is employed, the characters should be indented to produce greater durability of marking. Any other method of length marking must be acceptable to RUS as producing a marker suitable for the field. Size, shape and spacing of numbers, durability and overall legibility of the marker will be considered in acceptance of the method.

(10) Agreement between the actual length of the cable and the length marking on the cable jacket must be within the limits of +1 percent, −0 percent.

(11) The color of the initial marking must be white or silver. If the initial marking fails to meet the requirements of the preceding paragraphs, it will be permissible to either remove the defective marking and re-mark with the white or silver color or leave the defective marking on the cable and re-mark with yellow. No further re-marking is permitted. Any re-marking must be on a different portion of the cable circumference than any existing marking when possible and have a numbering sequence differing from any other existing marking by at least 3,000.

(12) Any reel of cable that contains more than one set of sequential markings must be labeled to indicate the color and sequence of marking to be used. The labeling must be applied to the reel and also to the cable.

(p) *Optical performance.* (1) The optical performance of the single mode fibers must be in accordance with the requirements specified in paragraphs (p)(1)(i) through (p)(1)(viii) of this section.

(i) The attenuation values of the single mode fibers within the cable must not exceed 0.5 decibel per kilometer (dB/km) for dispersion-unshifted single mode fiber at 1310 and 1550 nanometers and must not exceed 0.5 dB/km for dispersion-shifted single mode fiber at 1550 nanometers. The test method used for measuring the attenuation must be in accordance with either:

(A) EIA/TIA–455–78A; or

(B) EIA/TIA–455–61.

(ii) The attenuation values for wavelengths between 1285 and 1330 nanometers and between 1525 and 1575 nanometers for dispersion-unshifted fibers must not exceed the attenuation at 1310 and 1550 nanometers by more than 0.1 dB/km. The attenuation values for wavelengths between 1525 and 1575 nanometers for dispersion-shifted fibers must not exceed the attenuation at 1550 nanometers by more than 0.1 dB/km. The test method used for measuring the attenuation must be in accordance with any one of the methods specified in paragraph (p)(1)(i) of this section.

(iii) Attenuation discontinuities in the fiber's length must not exceed 0.1 decibel (dB) for dispersion-unshifted fiber at 1310±20 and 1550±20 nanometers and must not exceed 0.1 dB for dispersion-shifted fiber at 1550±20 nanometers when measured in accordance with EIA/TIA–455–59.

(iv) Measurement of the attenuation must be conducted at the wavelength specified for application and must be expressed in decibels per kilometer.

(v) Because the accuracy of attenuation measurements for single mode fibers becomes questionable when measured on short cable lengths, attenuation measurements are to be made utilizing characterization cable lengths. If the ship length of cable is less than one kilometer, the attenuation values measured on longer lengths of cable (characterization length of cable) before cutting to the ship lengths of cable may be applied to the ship lengths.

(vi) For dispersion-unshifted fiber the zero dispersion wavelength must be between 1300 and 1322 nanometers, and the value of the dispersion slope at the zero-dispersion wavelength must not be greater than 0.092 picosecond per nanometer squared times kilometer (ps/(nm^2÷km) when measured in accordance with either:

(A) EIA/TIA–455–168A;

(B) EIA/TIA–455–169A; or

(C) EIA/TIA–455–175A.

(vii) For dispersion-shifted fiber, the dispersion over the wavelength range between 1525 and 1575 nanometers must not exceed 3.5 picosecond per nanometer times kilometer (ps/(nm÷km)) and must have a maximum dispersion slope of 0.095 ps/(nm^2÷km) at the zero dispersion wavelength when measured in accordance with any one of the test procedures specified in paragraph (p)(1)(vi) of this section.

(viii) The cut off wavelength of the dispersion-unshifted and the dispersion-shifted fibers in a cable must be less than 1260 nanometers when measured in accordance with EIA/TIA–455–170.

(2) The optical performance of the multimode fibers must be in accordance with the requirements specified in paragraphs (p)(2)(i) through (p)(2)(vi) of this section.

(i) The attenuation values of the 50/125 and 62.5/125 micrometer multimode fibers within the cable must not exceed 1.5 dB/km at 1300 nanometers when measured in accordance with either:

(A) EIA/TIA–455–46A;

(B) EIA/TIA–455–53A; or

(C) EIA/TIA–455–61.

(ii) Attenuation discontinuities in the fiber's length must not exceed 0.2 dB for both multimode fiber types at 1300±20 nanometers when measured in accordance with EIA/TIA–455–59.

(iii) Measurement of the attenuation must be conducted at the wavelength specified for application and must be expressed in decibels per kilometer.

(iv) Because the accuracy of attenuation measurements for multimode fibers becomes questionable when measured on short cable lengths, attenuation measurements are to be made utilizing characterization cable lengths. If the ship length of cable is less than one kilometer, the attenuation values measured on longer lengths of cable (characterization length of cable) before cutting to the ship lengths of cable may be applied to the ship lengths.

(v) The bandwidth of the multimode fibers at the −3 dB optical power of the optical fibers within the cable must be within the limits prescribed in the purchase order.

(vi) The test methods used to measure bandwidth must be in accordance with either EIA/TIA–455–30B or EIA/TIA–455–51A.

(3) Numerical aperture (NA) for each multimode optical fiber in the cable must be 0.20±0.015 for the 50/125 micrometer design and 0.275±0.015 for the 62.5/125 micrometer design when measured in accordance with EIA/TIA–455–177A.

(q) *Mechanical requirements*—(1) *Cable bend test*. (i) All cables manufactured in accordance with the requirements of this section must be capable of meeting the following bend test without exhibiting an increase in fiber attenuation greater than 0.10 dB for single mode fibers and 0.40 dB for multimode fibers.

(ii) Measure the attenuation of dispersion-unshifted single mode fibers at 1310±20 and 1550±20 nanometers, dispersion-shifted single mode fibers at 1550±20 nanometers and multimode fibers at 1300±20 nanometers.

(iii) After measuring the attenuation of the optical fibers, test the cable sample in accordance with EIA/TIA–455–37A, Test Condition E, Turns Test Level 3. The following detailed test conditions shall apply:

(A) Section 4.2—Mandrel diameter must be 20 times the cable diameter.

(B) Section 4.5—Measure the attenuation increase of the wound sample at the test temperature and specified wavelengths in accordance with EIA–455–20.

(C) For armored cable, the armor overlap must be on the outside of the bend.

(D) For self-supporting cable, the jacketed support messenger and connection web must be removed prior to testing.

(iv) The cable may be allowed to warm to room temperature before visual inspection. The bent area of the

cable must show neither visible evidence of fracture of the jacket nor delamination of the bond at the overlap and to the outer jacket in nonflooded cable. After removal of the jacket, there must be no visible evidence of fracture of the armor, when present, and of the components in the core.

(2) *Cable impact test.* (i) All cables manufactured in accordance with the requirements of this section must be capable of meeting the following impact test without exhibiting an increase in fiber attenuation greater than 0.10 dB for single mode fibers and 0.40 dB for multimode fibers, and without cracking or splitting of the cable jacket.

(ii) Measure the attenuation of the optical fibers in accordance with paragraph (q)(1)(ii) of this section.

(iii) After measuring the attenuation of the optical fibers, test the cable in accordance with EIA/TIA–455–25A.

(3) *Cable compression test.* (i) All cables manufactured in accordance with the requirements of this section must be capable of meeting the following compressive strength test without exhibiting an increase in fiber attenuation greater than 0.10 dB for single mode fibers and 0.4 dB for multimode and without cracking or splitting of the cable jacket when subjected to a minimum compressive load of 440 newtons per centimeter for armored cable and 220 newtons per centimeter for nonarmored cable.

(ii) Measure the attenuation of the optical fibers in accordance with paragraph (q)(1)(ii) of this section.

(iii) After measuring the attenuation of the optical fibers, test the cable in accordance with EIA–455–41 using a rate of 3 millimeters to 20 millimeters per minute and maintaining the load for 10 minutes.

(4) *Cable twist test.* (i) All cables manufactured in accordance with the requirements of this section must be capable of meeting the following twist test without exhibiting an increase in fiber attenuation greater than 0.10 dB for single mode fibers and 0.40 dB for multimode fibers, and without cracking or splitting of the cable jacket.

(ii) Measure the attenuation of the optical fibers in accordance with paragraph (q)(1)(ii) of this section.

(iii) After measuring the attenuation of the optical fibers, test the cable in accordance with EIA/TIA–455–85A, using a maximum cable twisting length of 4 meters.

(5) *Cable flex test.* (i) All cables manufactured in accordance with the requirements of this section must be capable of meeting the following flex test without exhibiting an increase in fiber attenuation greater than 0.10 dB for single mode fibers and 0.40 dB for multimode fibers.

(ii) Measure the attenuation of the optical fibers in accordance with paragraph (q)(1)(ii) of this section.

(iii) After measuring the attenuation of the optical fibers, test the cable in accordance with EIA/TIA–455–104A, Test Conditions I and II, flexed for 25 cycles using a sheave diameter not less than 20 times the cable diameter (Test condition letter B).

(iv) After completion of the test, the bent area of the cable must show neither visible evidence of fracture of the jacket nor delamination of the bond at the overlap and to the outer jacket in nonflooded cable. After removal of the jacket, there must be no visible evidence of fracture of the armor, when present, and of the components in the core.

(6) *Water penetration test.* (i) A one meter length of completed fiber optic cable must be preconditioned for 24 hours at 23±5 °C and then tested in accordance with EIA/TIA–455–82B using a one meter water head over the sample or placed under the equivalent continuous pressure for one hour.

(ii) After the one hour period, there must be no water leakage through the sheath interfaces, under the core wrap, between the cable core interstices or through the fiber buffers.

(iii) If water leakage is detected in the first sample, one additional 3 meter sample from EACH END of the same reel must be tested in accordance with paragraph (q)(6)(i) of this section. If either sample exhibits water leakage, the entire reel of cable is to be rejected. If the samples exhibit no leakage, the entire reel of cable is considered acceptable.

(7) *Compound flow test*. (i) Three 300 millimeter long test samples must be preconditioned for 24 hours at 23±5 °C and then tested in accordance with EIA/TIA–455–81A using a test temperature of 80 ±1 °C.

(ii) The amount of filling or flooding compounds that flowed or dripped from any of the suspended cable specimens must be less than or equal to 0.5 grams of material. The measurement of an amount greater than 0.5 grams for any of the suspended cable specimens constitutes failure.

(r) *Preconnectorized cable (optional)*. (1) At the option of the manufacturer and upon request by the purchaser, the cable may be factory terminated with connectors acceptable to RUS.

(2) All connectors must be accepted by RUS prior to their use.

(s) *Acceptance testing and extent of testing*. (1) The tests described in appendix A of this section are intended for acceptance of cable designs and major modifications of accepted designs. What constitutes a major modification is at the discretion of RUS. These tests are intended to show the inherent capability of the manufacturer to produce cable products that have satisfactory performance characteristics, long life and long-term optical stability but are not intended as field tests.

(2) For initial acceptance, the manufacturer must submit:

(i) An original signature certification that the product fully complies with each section of the specification;

(ii) Qualification Test Data, per appendix A of this section;

(iii) A set of instructions for handling the cable;

(iv) OSHA Material Safety Data Sheets for all components;

(v) Agree to periodic plant inspections;

(vi) A certification that the product does or does not comply with the domestic origin manufacturing provisions, of the ''Buy American'' requirements of the Rural Electrification Act of 1938 (52 Stat. 818);

(vii) Written user testimonials concerning field performance of the product; and

(viii) Other nonproprietary data deemed necessary by the Chief, Outside Plant Branch (Telephone).

(3) For requalification acceptance, the manufacturer must submit an original signature certification that the product fully complies with each section of the specification, excluding the Qualification Section, and a certification that the product does or does not comply with the domestic origin manufacturing provisions of the ''Buy American'' requirements of the Rural Electrification Act of 1938 (52 Stat. 818), for acceptance by September 30 every three years. The required data and certification must have been gathered within 90 days of the submission.

(4) Initial and requalification acceptance requests should be addressed to: Chairman, Technical Standards Committee ''A'' (Telephone), Telecommunications Standards Division, Rural Utilities Service, Washington, DC 20250–1500.

(5) *Tests on 100 percent of completed cable*. (i) The armor for each length of cable must be tested for continuity using the procedures of ASTM D 4566–90.

(ii) Attenuation for each optical fiber in the cable must be measured.

(iii) Optical discontinuities must be isolated and their location and amplitude recorded.

(6) *Capability tests*. Tests on a quality assurance basis must be made as frequently as is required for each manufacturer to determine and maintain compliance with:

(i) Numerical aperture and bandwidth of multimode fibers;

(ii) Cut off wavelength of single mode fibers;

(iii) Dispersion of single mode fibers;

(iv) Shrinkback and cold testing of loose tube and tight tube buffers;

(v) Adhesion properties of the protective fiber coating;

(vi) Dielectric strength between the armor and the metallic central member;

(vii) Performance requirements for the inner and outer jacketing materials;

(viii) Performance requirements for the filling and flooding compounds;

(ix) Bonding properties of the coated armoring material;

(x) Sequential marking and lettering;

(xi) Cable bend and cable impact tests;

(xii) Water penetration and compound flow tests;

(xiii) Cable twist, cable flex, and cable compression tests; and

(xiv) Performance requirements of support messenger.

(t) *Records of optical and physical tests.* (1) Each manufacturer must maintain suitable summary records for a period of at least 3 years of all optical and physical tests required on completed cable by this section as set forth in paragraphs (s)(5) and (s)(6) of this section. The test data for a particular reel must be in a form that it may be readily available to RUS upon request. The optical data must be furnished to the purchaser on a suitable and easily readable form.

(2) Measurements and computed values must be rounded off to the number of places or figures specified for the requirement according to ASTM E 29–90.

(u) *Manufacturing irregularities.* (1) Repairs to the armor, when present, are not permitted in cable supplied to end users under this section.

(2) Minor defects in the inner and outer jacket (defects having a dimension of 3 millimeter or less in any direction) may be repaired by means of heat fusing in accordance with good commercial practices utilizing sheath grade compounds.

(3) Buffer tube repair is permitted only in conjunction with fiber splicing.

(v) *Packaging and preparation for shipment.* (1) The cable must be shipped on reels. The diameter of the drum must be large enough to prevent damage to the cable from reeling and unreeling. The reels must be substantial and so constructed as to prevent damage during shipment and handling.

(2) A circumferential thermal wrap or other means of protection complying with the requirements of appendix B of this section must be secured between the outer edges of the reel flange to protect the cable against damage during storage and shipment.

(3) Cable manufactured to the requirements of this section must be sealed at the ends to prevent entrance of moisture. The method of sealing must be accepted by RUS prior to its use.

(4) The end-of-pull (outer end) of the cable must be securely fastened to prevent the cable from coming loose during transit. The start-of-pull (inner end) of the cable must project through a slot in the flange of the reel, around an inner riser, or into a recess on the reel flange near the drum and fastened in such a way to prevent the cable from becoming loose during installation.

(5) Spikes, staples or other fastening devices must be used in a manner which will not result in penetration of the cable.

(6) The arbor hole must admit a spindle 63.5 millimeters in diameter without binding. Steel arbor hole liners may be used but must be accepted by RUS prior to their use.

(7) Each reel must be plainly marked to indicate the direction in which it should be rolled to prevent loosening of the cable on the reel.

(8) Each reel must be stenciled or lettered with the name of the manufacturer.

(9) The following information must be either stenciled on the reel or on a tag firmly attached to the reel:

Optical Cable
Number of Fibers
Armored or Nonarmored
Year of Manufacture
Name of Cable Manufacturer
Length of Cable
Reel Number
RUS 7 CFR 1755.900

Example:

Optical Cable
4 fiber
Armored
1988
XYZ Company
1050 meters
Reel Number 3
RUS 7 CFR 1755.900

(10) When preconnectorized cable is shipped, the splicing modules must be protected to prevent damage during shipment and handling. The protection method must be accepted by RUS prior to its use.

(The information collection and recordkeeping requirements of this section have been approved by the Office of Management and Budget (OMB) under control number 0572–0059)

APPENDIX A TO § 1755.900—QUALIFICATION TESTS METHODS

(I) The test procedures described in this appendix are for qualification of initial cable designs and major modifications of accepted designs. Included in (V) of this appendix are suggested formats that may be used in submitting test results to RUS.

(II) Sample selection and preparation. (1) All testing must be performed on lengths removed sequentially from any of the same cables listed below. The cables must not have been exposed to temperatures in excess of 38 °C since their initial cool downs after sheathing. The lengths specified are minimum lengths and if desirable from a laboratory testing standpoint longer lengths may be used:

(a) 12 single mode fiber jacketed cable consisting of 6 single mode dispersion-unshifted fibers and 6 single mode dispersion-shifted fibers.

(b) 12 multimode fiber jacketed cable consisting of 6 50/125 micrometer multimode fibers and 6 62.5/125 micrometer multimode fibers.

(c) 24 fiber jacketed combination cable consisting of 6 single mode dispersion-unshifted fibers; 6 single mode dispersion-shifted fibers; 6 50/125 micrometer multimode fibers; and 6 62.5/125 micrometer multimode fibers.

(2) Length A shall be a minimum of 500 meters long. Coil the sample with a diameter of 50 to 75 times its sheath diameter. Three lengths are required if only requesting acceptance for either single mode fiber cable (a), multimode fiber cable (b), or using the combination fiber cable (c). Six lengths, 3 lengths of single mode fiber cable (a), and 3 lengths of multimode fiber cable (b), are required if requesting acceptance for both single mode and multimode fiber cables.

(3) Length B shall be one meter long. Four lengths of either single mode fiber cable (a), multimode fiber cable (b) or the combination fiber cable (c) are required.

(4) Length C shall be 600 millimeters long. Four lengths of either single mode fiber cable (a), multimode fiber cable (b) or the combination fiber cable (c) are required.

(5) Data reference temperature. Unless otherwise specified, all measurement shall be made at 23±5 °C.

(III) *Environmental tests*—(1) *Heat aging test.* (a) *Test samples.* Place one or two samples of length A and one sample each of lengths B and C in an oven or environmental chamber. The ends of sample A must exit from the chamber or oven for optical tests. Securely seal the oven exit holes.

(b) *Sequence of tests.* The samples are to be subjected to the following tests after conditioning:

(i) Water Penetration Test outlined in paragraph (III) (2) of this appendix; and

(ii) Jacket Slip Strength Test outlined in paragraph (III) (3) of this appendix. (For Flooded Designs Only)

(c) *Initial measurements.* (i) For sample(s) A measure the attenuation for the single mode dispersion-unshifted fibers at 1310 and 1550 nanometers, for single mode dispersion-shifted fibers at 1550 nanometers and/or for multimode fibers at 1300 nanometers at a temperature of 23±5 °C. Also measure the bandwidth of the multimode fibers. Calculate the attenuation data on a per kilometer basis. Calculate the bandwidth data on a megahertz-kilometer (MHz-km) basis.

(ii) Record on suggested formats in (V) of this appendix or on other easily readable formats.

(d) *Heat conditioning.* (i) Immediately after completing the initial measurements, condition the sample(s) for 14 days at a temperature of 65±2 °C.

(ii) At the end of this period note any exudation of cable filler. Measure the parameters given in paragraph (III)(1)(c) of this appendix. Record on suggested formats in (V) of this appendix or on other easily readable formats.

(e) *Overall optical deviation.* (i) Calculate the change in all parameters between the final parameters after conditioning with initial parameters in paragraph (III)(1)(c) of this appendix.

(ii) The stability of the optical parameters after completion of this test must be within the following prescribed limits:

(A) *Attenuation.* The attenuation of each multimode fiber must not change by more than 0.3 db/km and the attenuation of each single mode fiber must not change by more than 0.1 dB/km.

(B) *Bandwidth.* The bandwidth of each multimode fiber must not change by more than 15 percent from their original values.

(2) *Water penetration testing.* (a) A watertight closure must be placed over the jacket of length B from paragraph (III)(1)(a) of this appendix. The closure must not be placed over the jacket so tightly that the flow of water through pre-existing voids or air spaces is restricted. The other end of the sample must remain open.

(b) Test per Option A or Option B. (i) *Option A.* Weigh the sample and closure prior to testing. Fill the closure with water and place under a continuous pressure of 10 ±0.7 kilopascals for one hour. Collect the water leakage from the end of the test sample during the test and weigh to the nearest 0.1 gram. Immediately after the one hour test, seal the ends of the cable with a thin layer of grease and remove all visible water from the closure, being careful not to remove water that penetrated into the core during the test. Reweigh the sample and determine the weight of water that penetrated into the core.

(ii) *Option B*. Fill the closure with a 0.2 gram sodium fluorscein per liter water solution and apply a continuous pressure of 10 ±0.7 kilopascals for one hour. Catch and weigh any water that leaks from the end of the cable during the one hour period. If no water leaks from the sample, carefully remove the water from the closure. Then carefully remove the outer jacket, armor, if present, inner jacket, if present, and core wrap one at a time, examining with an ultraviolet light source for water penetration. After removal of the core wrap, carefully dissect the core and examine for water penetration within the core. Where water penetration is observed, measure the penetration distance.

(3) *Jacket slip strength test*. (For Flooded Design Only) (a) *Sample selection*. Test sample C from paragraph (III)(1)(a) of this appendix.

(b) *Sample preparation*. Prepare test sample in accordance with the procedures specified in ASTM D 4565–90a.

(c) *Sample conditioning and testing*. Remove the sample from the tensile tester prior to testing and condition for one hour at 50 ±2 °C. Test immediately in accordance with the procedures specified in ASTM D 4565–90a. A minimum jacket slip strength of 67 newtons is required. Record the load attained on the suggested formats in (V) of this appendix or on other easily readable formats.

(4) *Temperature and humidity exposure*. (a) Repeat paragraphs (III)(1)(a) through (III)(1)(c)(ii) of this appendix for separate set of samples A, B and C which have not been subjected to prior environmental conditioning.

(b) Immediately after completing the measurements, expose the test sample to 100 temperature cyclings. Relative humidity within the chamber shall be maintained at 90 ±2 percent. One cycle consists of beginning at a stabilized chamber and test sample temperature of 52 ±2 °C, increasing the temperature to 57 ±2 °C, allowing the chamber and test samples to stabilize at this level, then dropping the temperature back to 52 ±2 °C.

(c) Repeat paragraphs (III)(1)(d)(ii) through (III)(3)(c) of this appendix.

(5) *Temperature cycling*. (a) Repeat paragraphs (III)(1)(a) through (III)(1)(c)(ii) of this appendix for separate set of samples A, B, and C which have not been subjected to prior environmental conditioning.

(b) Immediately after completing the measurements, subject the test sample to 10 cycles of temperature between −40 °C and +60 °C. The test sample must be held at each temperature extreme for a minimum of 1½ hours during each cycle of temperature. The air within the temperature cycling chamber must be circulated throughout the duration of the cycling.

(c) Repeat paragraphs (III)(1)(d)(ii) through (III)(3)(c) of this appendix.

(IV) *Control sample*—(a) *Test samples*. A separate set of lengths B and C must have been maintained at 23 ±5 °C for at least 48 hours before the testing.

(b) Repeat paragraphs (III)(2) through (III)(3)(c) of this appendix for these samples.

(V) The following suggested formats may be used in submitting the test results to RUS:

HEAT AGING TEST—SINGLE MODE CABLE

Fiber No.	Attenuation—1310 nm dB/km			Attenuation—1550 nm dB/km		
	Initial	Final	Change	Initial	Final	Change
1						
2						
3						
4						
5						
6						
7						
8						
9						
10						
11						
12						

HEAT AGING TEST—MULTIMODE CABLE

Fiber No.	Attenuation—1300 nm dB/km			Bandwidth dB/km		
	Initial	Final	Change	Initial	Final	Change (%)
1						
2						
3						
4						
5						
6						
7						
8						
9						
10						
11						
12						

HEAT AGING TEST—COMBINATION CABLE

Fiber No.	Attenuation—1310 nm dB/km			Attenuation—1550 nm dB/km			Bandwidth MHz-km		
	Initial	Final	Change	Initial	Final	Change	Initial	Final	Change (%)
1									
2									
3									
4									
5									
6									
7									
8									
9									
10									
11									
12									
13									
14									
15									
16									
17									
18									
19									

HEAT AGING TEST—COMBINATION CABLE—Continued

Fiber No.	Attenuation—1310 nm dB/km			Attenuation—1550 nm dB/km			Bandwidth MHz-km		
	Initial	Final	Change	Initial	Final	Change	Initial	Final	Change (%)
20									
21									
22									
23									
24									

TEMPERATURE/HUMIDITY TEST—SINGLE MODE CABLE

Fiber No.	Attenuation—1310 nm dB/km			Attenuation—1550 nm dB/km		
	Initial	Final	Change	Initial	Final	Change
1						
2						
3						
4						
5						
6						
7						
8						
9						
10						
11						
12						

TEMPERATURE/HUMIDITY TEST—MULTIMODE CABLE

Fiber No.	Attenuation—1300 nm dB/km			Bandwidth MHz-km		
	Initial	Final	Change	Initial	Final	Change
1						
2						
3						
4						
5						
6						
7						
8						
9						
10						
11						
12						

TEMPERATURE/HUMIDITY TEST—COMBINATION CABLE

Fiber No.	Attenuation—1310 nm dB/km			Attenuation—1550 nm dB/km			Bandwidth MHz-km		
	Initial	Final	Change	Initial	Final	Change	Initial	Final	Change (%)
1									
2									
3									
4									
5									
6									
7									
8									
9									
10									
11									
12									
13									
14									
15									
16									
17									
18									
19									

TEMPERATURE/HUMIDITY TEST—COMBINATION CABLE—Continued

Fiber No.	Attenuation—1310 nm dB/km			Attenuation—1550 nm dB/km			Bandwidth MHz-km		
	Initial	Final	Change	Initial	Final	Change	Initial	Final	Change (%)
20									
21									
22									
23									
24									

TEMPERATURE CYCLING TEST—SINGLE MODE CABLE

Fiber No.	Attenuation—1310 nm dB/km			Attenuation—1550 nm dB/km		
	Initial	Final	Change	Initial	Final	Change
1						
2						
3						
4						
5						
6						
7						
8						
9						
10						
11						
12						

TEMPERATURE CYCLING—MULTIMODE CABLE

Fiber No.	Attenuation—1300 nm dB/km			Bandwidth MHz-km		
	Initial	Final	Change	Initial	Final	Change (%)
1						
2						
3						
4						
5						
6						
7						
8						
9						
10						
11						
12						

TEMPERATURE CYCLING TEST COMBINATION CABLE

Fiber No.	Attenuation—1310 nm dB/km			Attenuation—1550 nm dB/km			Bandwidth MHz-km		
	Initial	Final	Change	Initial	Final	Change	Initial	Final	Change (%)
1									
2									
3									
4									
5									
6									
7									
8									
9									
10									
11									
12									
13									
14									
15									
16									
17									
18									
19									

TEMPERATURE CYCLING TEST COMBINATION CABLE—Continued

Fiber No.	Attenuation—1310 nm dB/km			Attenuation—1550 nm dB/km			Bandwidth MHz-km		
	Initial	Final	Change	Initial	Final	Change	Initial	Final	Change (%)
20									
21									
22									
23									
24									

WATER PENETRATION TEST

	Option A		Option B	
	End leakage grams	Weight gain grams	End leakage grams	Penetration millimeters
Control. Heat Age. Humidity Exposure. Temperature Cycling.				

JACKET SLIP STRENGTH @ 50 °C

	Load in Newtons
Control. Heat Age. Humidity Exposure. Temperature Cycling.	
	Filler Exudation (grams)
Heat Age. Humidity Exposure. Temperature Cycle.	

APPENDIX B TO 7 CFR 1755.900—THERMAL REEL WRAP QUALIFICATION

(I) The test procedures described in this appendix are only for qualification of initial and subsequent changes in thermal reel wraps.

(II) *Sample selection*. All testing must be performed on two 450 millimeter lengths of cable removed sequentially from the same fiber jacketed cable. This cable must not have been exposed to temperatures in excess of 38 °C since its initial cool down after sheathing.

(III) *Test procedure*. (1) Place the two samples on an insulating material such as wood.

(2) Tape thermocouples to the jackets of each sample to measure the jacket temperature.

(3) Cover one sample with the thermal reel wrap.

(4) Expose the samples to a radiant heat source capable of heating the uncovered jacket sample to a minimum of 71 °C. A GE 600 watt photoflood lamp or an equivalent lamp having the light spectrum approximately that of the sun shall be used.

(5) The height of the lamp above the jacket shall be 380 millimeters or an equivalent height that produces the 71 °C jacket temperature on the unwrapped sample shall be used.

(6) After the samples have stabilized at the temperature, the jacket temperatures of the samples shall be recorded after one hour of exposure to the heat source.

(7) Compute the temperature difference between jackets.

(8) For the thermal reel wrap to be acceptable to RUS, the temperature difference between the jacket with the thermal reel wrap and the jacket without the reel wrap shall be greater than or equal to 17 °C.

[59 FR 34360, July 5, 1994; 59 FR 44795, Aug. 30, 1994, as amended at 60 FR 1711, Jan. 5, 1995; 69 FR 18803, Apr. 9, 2004]

§ 1755.910 RUS specification for outside plant housings and serving area interface systems.

(a) *Scope*. (1) The purpose of this specification is to inform manufacturers and users of outside plant housings and serving area interface (SAI) systems of the engineering and technical requirements that are considered necessary for satisfactory performance in outside plant environments. Included are the mechanical, electrical, and environmental requirements, desired design features, and test methods for evaluation of the product.

(2) The housing and terminal requirements reflect the best engineering judgment available at the present time and may be subject to change due to advances in technology, economic conditions, or other factors.

(3) The test procedures described in this section are required by RUS to demonstrate the functional reliability of the product. However, other standard or unique test procedures may serve the same function. In such cases, RUS shall evaluate the test procedures and results on an individual basis.

(4) The test procedures specified herein satisfy the requirements of housings as well as the requirements of terminals that may be installed within housings. Some of the requirements are interrelated to several tests designed to determine the performance aspects of terminals and are directly affected by testing required for housings. Therefore, the manufacturer should carefully review all the test requirements in order to develop a testing schedule that is comprehensive, efficient in terms of the number of test specimens required and can be accomplished in an orderly and logical sequence.

(5) The specified tests may require special facilities to comply with Federal, State, or local regulatory requirements. Some test procedures are potentially hazardous to personnel because of the high voltages and mechanical forces involved. Safety precautions are necessary to prevent injury.

(6) Underwriters Laboratories, Inc. (UL) 94, Tests for Flammability of Plastic Materials for Parts in Devices and Appliances, fourth edition, dated June 18, 1991, referenced in this section is incorporated by reference by RUS. This incorporation by reference was approved by the Director of the Federal Register in accordance with 5 U.S.C. 552(a) and 1 CFR part 51. A copy of the UL standard is available for inspection during normal business hours at RUS, room 2845–S, U.S. Department of Agriculture, Washington, DC 20250–1500, or at the National Archives and Records Administration (NARA). For information on the availability of this material at NARA, call 202–741–6030, or go to: *http://www.archives.gov/federal_register/code_of_federal_regulations/ibr_locations.html*. Copies are available from UL Inc., 333 Pfingsten Road, Northbrook, Illinois 60062–2096, telephone number (708) 272–8800.

(7) The American Society for Testing and Materials Specifications (ASTM) A 109–91, Standard Specification for Steel, Strip, Carbon, Cold-Rolled; ASTM A 153–82 (Reapproved 1987), Standard Specification for Zinc Coating (Hot-Dip) on Iron and Steel Hardware; ASTM A 366/A 366M–91, Standard Specification for Steel, Sheet, Carbon, Cold-Rolled, Commercial Quality; ASTM A 525–91b, Standard Specification for General Requirements for Steel Sheet, Zinc-Coated (Galvanized) by the Hot-Dip Process; ASTM A 526/A 526M–90, Standard Specification for Steel Sheet, Zinc-Coated (Galvanized) by the Hot-Dip Process, Commercial Quality; ASTM A 569/A 569M–91a, Standard Specification for Steel, Carbon (0.15 Maximum, Percent), Hot-Rolled Sheet and Strip Commercial Quality; ASTM A 621/A 621M–92, Standard Specification for Steel, Sheet and Strip, Carbon, Hot-Rolled, Drawing Quality; ASTM B 117–90, Standard Test Method of Salt Spray (Fog) Testing; ASTM B 539–90, Standard Test Methods for Measuring Contact Resistance of Electrical Connections (Static Contacts); ASTM B 633–85, Standard Specification for Electrodeposited Coatings of Zinc on Iron and Steel; ASTM D 523–89, Standard Test Method for Specular Gloss; ASTM D 610–85 (Reapproved 1989), Standard Test Method for Evaluating Degree of Rusting on Painted Steel Surfaces; ASTM D 822–89, Standard Practice for Conducting Tests on Paint and Related Coatings and Materials using Filtered Open-Flame Carbon-Arc Light and Water Exposure Apparatus; ASTM D 1535–89, Standard Test Method for Specifying Color by the Munsell System; ASTM D 1654–92, Standard Test Method for Evaluation of Painted or Coated Specimens Subjected to Corrosive Environments; ASTM D 1693–70 (Reapproved 1988), Standard Test Method for Environmental Stress-Cracking of Ethylene Plastics; ASTM D 2197–86 (Reapproved 1991), Standard Test Method for Adhesion of Organic Coatings by Scrape Adhesion; ASTM D 2247–92, Standard Practice for Testing Water Resistance of Coatings in 100% Relative Humidity; ASTM D 2565–92, Standard Practice for Operating Xenon Arc-Type Light-Exposure Apparatus With and Without

Water for Exposure of Plastics; ASTM D 2794–92, Standard Test Method for Resistance of Organic Coatings to the Effects of Rapid Deformation (Impact); ASTM D 3928–89, Standard Test Method for Evaluation of Gloss or Sheen Uniformity; ASTM D 4568–86, Standard Test Methods for Evaluating Compatibility Between Cable Filling and Flooding Compounds and Polyolefin Cable Materials; ASTM G 21–90, Standard Practice for Determining Resistance of Synthetic Polymeric Materials to Fungi; and ASTM G 23–90, Standard Practice for Operating Light-Exposure Apparatus (Carbon-Arc Type) With and Without Water for Exposure of Nonmetallic Materials, referenced in this section are incorporated by reference by RUS. These incorporations by references were approved by the Director of the Federal Register in accordance with 5 U.S.C. 552(a) and 7 CFR part 51. Copies of the ASTM standards are available for inspection during normal business hours at RUS, room 2845–S, U.S. Department of Agriculture, Washington, DC 20250–1500, or at the National Archives and Records Administration (NARA). For information on the availability of this material at NARA, call 202–741–6030, or go to: *http://www.archives.gov/federal_register/code_of_federal_regulations/ibr_locations.html*. Copies are available from ASTM, 1916 Race Street, Philadelphia, Pennsylvania 19103–1187, telephone number (215) 299–5585.

(b) *General information*. (1) Outside plant housings are fabricated of either metallic or nonmetallic materials in different sizes and configurations to suit a variety of applications. The purpose of a housing is to protect its contents from environmental elements, rodents, insects, or vandalism and unauthorized access. Housings are designed with internal brackets for accommodating splicing, bonding and grounding connections, cable terminals, cross-connect facilities, load coils, and optical and electronic equipment.

(2) Pedestals are housings primarily intended to house, organize, and protect cable terminations incorporating terminal blocks, splice connectors and modules, ground lugs and load coils. Activities typically performed in a pedestal are cable splicing, shield bonding and grounding, inductive loading, and connection of subscriber drops.

(3) Serving area interface (SAI) cabinets are housings intended to perform some of the same functions as pedestals but are primarily intended to serve as the connecting terminal between feeder cable and distribution cables.

(4) Outside plant housings shall be manufactured in accordance with National Electrical Code (NEC) requirements, Underwriters' Laboratories (UL) requirements, Department of Labor, Occupational Safety and Health Administration Standards (OSHA), and all other applicable Federal, State, and local requirements including, but not limited to, statutes, rules, regulations, orders, or ordinances otherwise imposed by law.

(c) *General documentation requirements*—(1) *Installation and maintenance instructions*. (i) Each product shall have available a set of instructions designed to provide sufficient information for the successful installation of the housing, cables, auxiliary equipment, and the associated splice preparation. The instructions shall be of sufficient size to be easily read and shall be printed using waterproof ink. Pedestal instruction sheets shall include a list of miscellaneous replacement parts that may be purchased locally. SAI systems shall be supplied with complete instructions for installation and use.

(ii) When requested by RUS, or an RUS borrower, the manufacturer shall prepare a training package for the purpose of training technicians in the use and installation of the product and its auxiliary equipment.

(iii) The manufacturer shall provide ordering information for repair parts. Repair parts shall be obtainable through a local distributor or shall be easily obtainable. Information describing equivalent parts and their sources should be provided for those parts that may also be obtained from other sources.

(2) *Quality assurance*. The manufacturer shall demonstrate the existence of an ongoing quality assurance program that includes controls, procedures, and standards used for vendor certification, source inspection, incoming inspection, manufacture, in process

testing, calibration and maintenance of tools and test equipment, final product inspection and testing, periodic qualification testing and control of nonconforming materials and products. The manufacturer shall maintain quality assurance records for five years.

(3) *RUS acceptance applications.* (i) The tests described in this specification are required for acceptance of product designs and major modifications of accepted designs. All modifications shall be considered major unless otherwise declared by RUS. The tests are intended to show the inherent capability of the manufacturer to produce products which have an expected service life of 30 years.

(ii) For initial acceptance the manufacturer shall:

(A) Submit an original signature certification that the product complies with each section of the specification;

(B) Provide qualification test data;

(C) Provide OSHA Material Safety Data Sheets for the product;

(D) Provide a detailed explanation concerning the intended use and capacity of the product;

(E) Provide a complete set of instructions, recommendations for equipment organization and splicing;

(F) Agree to periodic plant inspections;

(G) Provide a certification that the product does or does not comply with the domestic origin manufacturing provisions of the ''Buy American'' requirements of the Rural Electrification Act of 1938 (52 Stat. 818);

(H) Provide user testimonials concerning field performance of the product;

(I) Provide product samples if requested by RUS; and

(J) Provide any other data required by the Chief, Outside Plant Branch (Telephone).

(iii) Each requirement of this section must be addressed in submissions for acceptance. The designation N/A may be entered when the requirements do not apply.

(iv) Acceptance requests should be addressed to: Chairman, Technical Standards, Committee ''A'' (Telephone), Telecommunications Standards Division, Rural Utilities Service, Washington, DC 20250–1500.

(d) *Functional design criteria for housings*—(1) *General requirements.* (i) The functional requirements for housings concern materials, finishes, environmental factors, and design features that are applicable to most above ground housings used in the outside plant.

(ii) Housings shall be of sufficient size to permit easily managed installation, operational, testing, and maintenance operations. The general shape of outside plant housings is usually comparable to that of a rectangular column or cylinder, with the shape of any particular housing being left to the manufacturer's discretion. Each design is subject to acceptance by RUS.

(2) *Housing types and capacities.* (i) Housings used in outside plant are either the smaller housings generally known as pedestals or larger housings known as equipment or splice cabinets. Both categories may have designs intended for stake mounting, pole mounting, or pad mounting.

(ii) The classifications of pedestals are the general purpose channel Type (H) and the dome Type (M). The Type H pedestal has either front only access or back and front access while the Type M pedestal has top only access. Pedestals are further designated as follows:

Stake mounted	Type	Pole mounted	Pole mounted (extra high)
BD3	H	BD3A	
BD4	H	BD4A	
BD5	H	BD5A	
BD7	H	BD7A	
BD14	M	BD14A	BD14AG
BD15	M	BD15A	BD15AG
BD16	M	BD16A	BD16AG

(iii) The minimum volume associated with the pedestal designations shall be as shown in the following table:

Pedestal [1] housing designation	Minimum volume	
	Cubic centimeters cm^3	(Cubic Inches) ($in.^3$)
BD3, BD3A [2]	9,000	(550)
BD4, BD4A [2]	15,000	(900)
BD5, BD5A [2]	35,000	(2,100)
BD7([2])	72,000	(4,400)
BD14, BD14A, BD14AG [3]	9,000	(550)
BD15, BD15A, BD15AG [3]	27,000	(1,600)
BD16, BD16A, BD16AG [3]	38,000	(2,300)

NOTE 1: Housings designed for unique purposes will be evaluated on a case-by-case basis.

NOTE 2: For Type H pedestals, the minimum volume is that space as measured 5 centimeters (cm) (2 inches (in.)) below the top of the housing to a point 40 cm (16 in.) above the bottom of the lower cover plate.

NOTE 3: The minimum volume of the Type M pedestals shall be the space within the dome measured from the lower edge of the dome to a point 5 cm (2 in.) from the top.

(iv) Equipment cabinets intended for use as SAI housings shall be assigned size designations according to their maximum pair termination capacities. The capacity will vary depending on the type of terminating equipment used. SAI cabinets shall be suffix designated with an ''A'' for pole mounting, ''X'' for pad mounting, and ''S'' for stake mounting.

(v) Large pair count splice cabinets are classified according to their splice capacity. Approximately 48 cm^3 (3.0 $in.^3$) of splice area per pair straight spliced shall be permitted.

(vi) The minimum volume associated with large pair count splice cabinets shall be as shown in the following table:

Splice cabinet [1] designation	Minimum volume		Maximum splice capacity (pairs)
	($cm.^3$)	($in.^3$)	
BD6000	295,000	(18,000)	6,000
BD8000	393,000	(24,000)	8,000
BD10000	491,000	(30,000)	10,000

NOTE 1: Additional sizes of splice cabinets shall be considered by RUS on a case-by-case basis.

(3) *Design and fabrication requirements for housings.* (i) Type H pedestal housings may consist of an enclosed channel incorporating an integrally mounted stake that serves as a backplate, or they may be designed for universal mounting on stakes or poles. The body of the housing shall have two major components; an upper cover and a base cover. The upper cover shall have a top, front and back plate with the front cover removable to permit entry and provide increased work space. The base cover shall consist of a front plate and back plate. The base cover back plate may be an extension of the upper back plate cover.

(ii) Type M pedestal housings shall consist of a one piece upper sleeve designed to fit over the base cover trapping air to prohibit water from entering the splice area when installed in locations prone to temporary flooding. Pedestals designed to be mounted extra high on poles for locations susceptible to deep snow shall have a bottom close-off option available to prohibit the ingress of birds, rodents and insects.

(iii) The external housing components on all outside plant housings shall provide reasonable protection against accidental removal or vandalism. Housings shall be equipped with a cover plate retaining bolt and cup washer that may be opened only with an industry accepted socket type can wrench. Housings may be equipped with provisions to allow the purchaser to install a padlock.

(iv) Installed housings shall resist the disassembling force of frost heaving applied to the bottom of ground line cover plates. The base cover must remain stationary to stabilize the contents of the housing cavity.

(v) In an effort to provide protection against dust penetration, blowing snow, rain, and ultraviolet light degradation of internal components, all mechanical gaps shall be restricted. The use of seals, overlaps, gaskets, and/or dovetailing is required to assure satisfactory protection of housed equipment.

(vi) Knockouts, cutouts, or notches designed to accommodate aerial service drops shall not be permitted. A design option for housings intended to accommodate service drops shall include a separate channel or equivalent in the base cover to allow future additions of service drops without the removal of gravel or the moisture barrier in the base of the housing. Service wire channels must be designed to prevent the entry of birds, reptiles, rodents and insects.

(vii) Minimal venting of SAI housings may be necessary to relieve internal pressure and condensation.

(viii) There shall be no aluminum housing components that will become buried in the soil when the housing is properly installed.

(ix) Housing components may be assembled using rivets, welds, glue, bolts and nuts, or other techniques suitable for the materials involved.

(x) Housings and their components that require field assembly must be capable of being assembled with tools normally available to outside plant technicians.

(xi) Hinged doors on SAI housings and large pair count splice housings shall be equipped with a device that restrains the doors in the open position.

(xii) Outside plant housings shall be free of sharp edges, burrs, etc., that could present a safety hazard to personnel involved in installation and use of the product or to the general public. Surfaces inside housings must not allow pinching of conductors during installation of cover plates or the opening and closing of doors.

(xiii) A ground line mark shall be provided, approximately 15 cm (6 in.) below the top edge of the housing base cover plate on housings intended for ground level mounting. Base cover plates shall have a minimum height of 31 cm (12 in.).

(xiv) Any housing, which weighs in excess of 91 kilograms (kg) (200 pounds (lb)), including its contents, shall be equipped with lifting brackets for attaching hoisting cables or chains.

(xv) Housing stakes shall be a minimum of 107 cm (42 in.) in length. If fabricated from steel, they shall have a minimum thickness of No. 13 gauge as measured according to American Society for Testing and Materials (ASTM) A 525–91b. Stakes shall be formed into a ''U'' channel with a minimum depth of 2 cm (0.75 in.). The stake shall be a single part of suitable design strength for driving 91 cm (36 in.) into the soil with hand tools without damage such as bending or warping. The stake shall have adequate mounting holes having a minimum separation of 15 cm (6 in.) for mounting the housing baseplate. The stake material must resist corrosion and deterioration when exposed to soil and atmospheric conditions.

(xvi) The housing design must permit a logical progression of installation steps that would normally be encountered in typical field installations.

(xvii) Provisions for attaching housings to stakes, poles, walls, other housings, or pads shall be provided for each design intended for those purposes. Locations of holes for mounting attachments may be provided by knockouts on above ground components. Mounting hole locations for below ground components may be predrilled.

(xviii) Pole mounting hardware shall provide at least 1.3 cm (0.5 in.) clearance from the pole to the housing. Pole mounting brackets shall accommodate the wide range of pole sizes used in the telephone industry.

(xix) Pad-mounted housings shall have hardware available for anchoring the housing base to the pad. A template may be provided to assist in the location of mounting attachment details for pad preparation.

(xx) Housings equipped with stub cables shall have strain relief devices to permit shipping and handling of the housing without damage to the housing or stub cables. Only RUS accepted cable shall be used for stub cables. The cable manufacturer's recommendations concerning minimum bend radius shall be observed. The minimum bend radius for most copper cables is 10 times the cable diameter.

(xxi) Cable supports shall be provided near the top of the ground line cover and other appropriate locations within the housing to provide cable stability consistent with the intended use and capacity of the housing. Cable supports shall be capable of holding a minimum load of 23 kg (50 lb).

(xxii) An adequate supply of nonmetallic retainer clips or tie wraps capable of supporting a minimum load of 23 kg (50 lb) shall be provided with the housing. Adequate spaces for installation of the clips or tie wraps must be provided on the housing backplate and cable supports.

(xxiii) Housing chambers designed for splicing operations shall be equipped with insulated supporting straps or rods suitable for supporting splice bundles. The insulation on the straps or rods shall extend for the entire length of the device and shall have a dielectric strength of 15 kilovolts (kv) direct current (dc) minimum. Housings having an ''H'' frame design where both front and rear covers may be removed may incorporate insulated tie bars to be used as cable supports.

(xxiv) Housings designed to contain equipment in addition to splices shall be equipped with a device for physically separating the splice area from the service area of the housing.

(xxv) A dielectric shield rated at 15 kv dc shall be provided to enclose the

cable splice area. The shield shall extend from the lower cable supports to within 2.5 cm (1 in.) of the top of the housing. The shield shall be equipped with Velcro or equivalent fastening devices designed to hold the shield in both the open or closed positions. The fastening devices shall extend along the entire vertical edge of the dielectric shield.

(xxvi) Mounting arrangements for a variety of terminal blocks and other equipment shall be provided by means of good housekeeping panels or other devices that may enhance the service aspect of the housing.

(xxvii) Housings designed for SAI cabinets may be shipped with terminal blocks installed and stub cables attached. If this option is exercised, the stub cables and terminal blocks must be RUS accepted. In all cases, SAI cabinets must be equipped with appropriate mounting devices for installing the peripheral equipment required for a serving area interface.

(xxviii) SAI cabinets shall be designed to provide physical separation between the splicing area and the area provided for running cross-connect jumpers.

(xxix) SAI cabinets and large splice housings must have an external feature for attaching a padlock to prevent unauthorized entry.

(xxx) Each housing shall have a tinned or zinc electroplated copper alloy or equivalent connector plate or bar to be used for terminating ground and cable shield bond connections. The device shall be equipped with captive studs and nuts with captive lock washers designed for attaching 6 American Wire Gauge (AWG) copper bonding harness wire or braid and a 6 AWG copper ground wire. Connector plates shall be equipped with enough studs and nuts to provide individual connections equivalent to the maximum number of cable sheaths recommended for the housing. Housings shall incorporate design features that enable the field installation of at least one additional connector plate for service conditions that require numerous connections. A bonding and grounding system capable of providing support and strain relief for service wires shall be provided for housings intended for use as distribution points. The bonding system shall be designed to provide sheath continuity as cable and service wires are installed, and prior to any other operation being performed. The bonding arrangement shall provide electrical continuity between all bonds and the ground connector plate. The bonding and grounding arrangement shall permit the lifting of individual cable ground connections for testing and cable locating activities without jeopardizing the grounding potential of other cables that may enter the housing. The bonding and grounding system shall be capable of conducting a current of 1000 amperes for at least 20 seconds.

(4) *Warning sign.* (i) A buried cable warning sign shall be securely attached to the outside of each housing. The lettering information on the sign shall be permanent.

(ii) For pedestals, the sign shall be centered horizontally on the front cover and the top of the sign shall be not more than 10 cm (4 in.) from the top of the housing.

(iii) For SAI cabinets, the sign shall be centered horizontally and vertically on the door. If there are two doors, the sign shall be mounted on the left door.

(iv) Deviations from warning sign location requirements are permitted only for housing design constraints. Alternate sign locations will be considered by RUS.

(v) The RUS standard sign design is shown in Figure 1.

(5) *Housing materials.* (i) Materials used in housings shall present no environmental or safety hazard as defined by industry standards or Federal, State, or local laws and regulations. Figure 1 is as follows:

FIGURE 1

WARNING SIGN

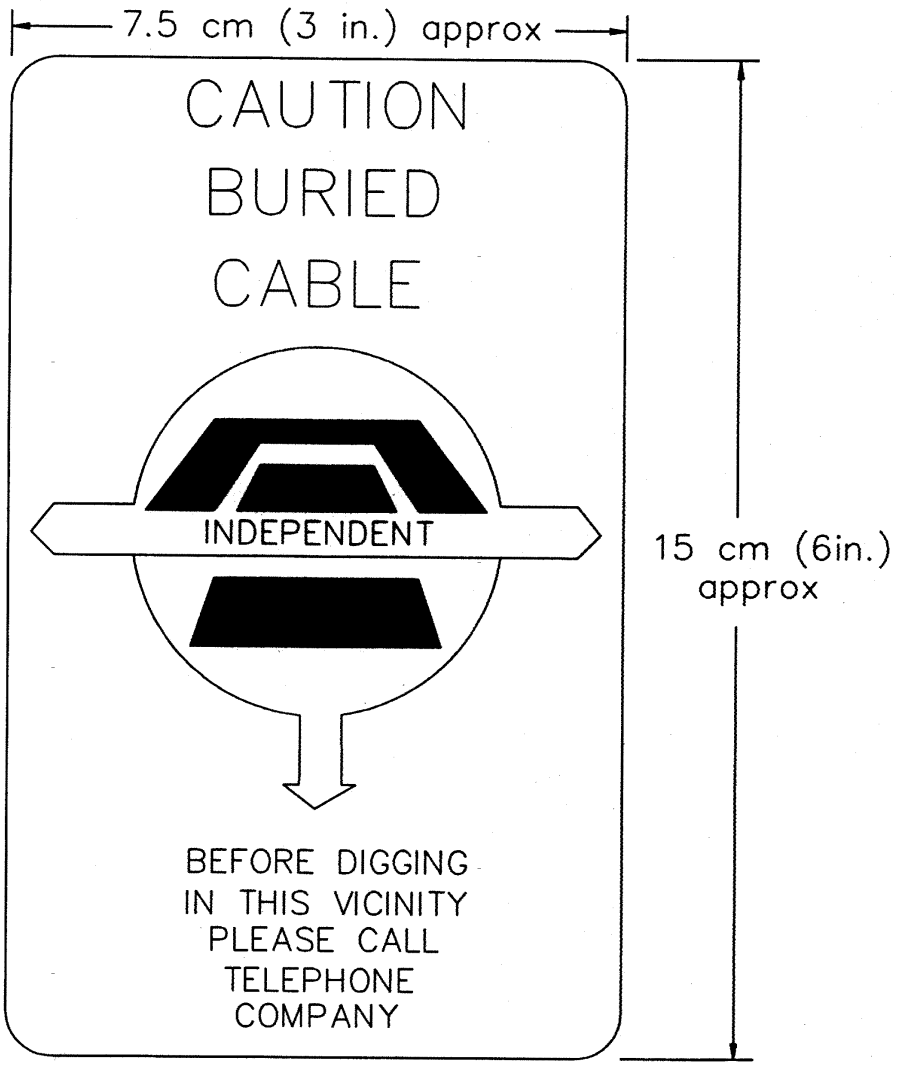

(ii) All materials are required to have fire resistance ratings consistent with recognized industry standards. External materials must be flame resistant.

(iii) All materials used in the manufacture of housings or component parts must achieve the required strength properties, resist deterioration when exposed to outdoor conditions, and be

acceptable to RUS for the specific application. New materials or materials not familiar to the RUS staff shall be supported by test and performance data which demonstrates their suitability for the intended use.

(iv) Nonmetallic housing materials shall have a fungus growth rating no greater than one according to ASTM G 21–90.

(v) Metallic components shall be either corrosion resistant or protected against corrosion and must not produce galvanic corrosion in wet or humid conditions on other metals that may be present in the housing environment.

(vi) Mill galvanized steel used in the manufacture of housings shall comply with the appropriate requirements of one of the following standards:

(A) ASTM A 109–91;

(B) ASTM A 366/A 366M–91;

(C) ASTM A 525–91b; or

(D) ASTM A 526/A 526M–90.

(vii) Hot rolled steel shall comply with the appropriate requirements of one of the following standards:

(A) ASTM A 569/A 569M–91a; or

(B) ASTM A 621/A 621M–92.

(viii) Cold rolled steel shall comply with the appropriate requirements of one of the following standards:

(A) ASTM A 109–91; or

(B) ASTM A 366/A 366M–91.

(ix) Steel parts used for internal housing brackets shall be hexavalent chromate coated or zinc plated in accordance with ASTM B 633–85.

(x) Hardware items used for assembling or fastening housing components shall be 300 series or passivated 400 series stainless steel or hot dip galvanized in accordance with ASTM A 153–82 (1987). Other materials will be considered by RUS on an individual basis.

(xi) Aluminum components shall be fabricated from alloy types 5052 or 6061 or other types that have been recognized as having acceptable corrosion resistance and formability and weldability features.

(xii) Nonmetallic parts must be resistant to solvents and stress cracking and shall be compatible with metals and other materials such as conductor insulations and filling compounds used in the manufacture of cable. Plastic materials must be noncorrosive to metals and resist deterioration when exposed to industrial chemical pollutants, ultra-violet rays, road salts, cleaning agents, insecticides, fertilizers, or other detrimental elements normally encountered in the outdoor environment.

(xiii) Housing door seals and gaskets may be manufactured from rubber or synthetic rubber-like elastomer materials. Seals and gaskets shall exhibit a high degree of weatherability with an effective life of at least 30 years in the outdoor environment. The material shall be tear resistant and have a low compression set.

(6) *Housing finish requirements.* (i) All interior and exterior surfaces of housings shall be free from blisters, wrinkles, cracks, scratches, dents, heat marks, and other defects.

(ii) There shall be inherent design provisions to prevent objectionable deterioration of the housing such as rusting, exposure of fiber or delamination. Secondary protection, such as galvanizing over steel per ASTM A 526/A 526M–90 or anodizing over aluminum, shall be provided to ensure reliability over the projected 30 year design life of the housing.

(iii) Painted metal housings shall have a minimum gloss of 60 (60 °specular) in accordance with ASTM D 523–89.

(iv) All painted surfaces shall have a uniform color and texture in accordance with ASTM D 3928–89. Nonmetallic housings shall meet recognized industry standards concerning optical appearance for gloss and haze as applicable for the material.

(v) The colors of housings that RUS will consider for acceptance shall be as follows:

Color	Standard
Gray-Green	Munsell 6.5 GY 6.03/1.6
	Munsell 4.4 GY 6.74/1.5
Green	Munsell 8.8 G 2.65/5.3
Orange	Federal Standard 595A
	Color Number I2246
	Munsell 0.15YR 5.26/13.15
Chocolate	Munsell 5.27YR 2.40/2.60
	Color Number 835

(7) *Installation requirements.* (i) The design of the housing must provide for a logical and normal installation sequence, i.e., excavation, installation of

a foundation or base and anchoring devices, addition of hardware, installation and bonding of cables, splicing, addition of service, and final closing.

(ii) No special tools or equipment other than that usually carried by outside plant technicians and construction crews must be required for installation of the housing. Security devices are the exception to this requirement.

(iii) Installation hardware shall maintain housings in an erect and stable position when subjected to normal storm loads. Pad-mounted designs must accommodate precast or cast-in-place reinforced concrete or other suitable prefabricated material. Brackets, inserts for fastening, conduit openings, or other items necessary for a pad-mounted installation must be provided. The manufacturer shall provide detailed drawings or a template for locating inserts, conduit openings, or slots for cast-in-place pad construction.

(e) *Performance criteria and test procedures for housings*—(1) *General information*. (i) The housing manufacturer shall perform adequate inspections and tests to demonstrate that housings and housing components comply with RUS requirements.

(ii) Testing shall be performed at a room temperature of 24±3 °C (75±5 °C). Temperatures for testing performed at other than room temperature shall be determined as near the center of the product under test as practical.

(2) *Description of test housing*. (i) Each distinctly designed and configured family of housings intended to perform a particular function shall be tested.

(ii) The typical test sample shall consist of the exterior housing components such as covers, backplates, good housekeeping panels, cap assembly, anchor posts, decals, etc. Interior components must include the bonding and grounding hardware for cables and service wires and the dielectric shield. The housing may include terminal blocks or cross-connect modules, cable splices, or the typical outside plant equipment the housing is designed to contain and protect.

(3) *Environmental requirement for housings*—(i) *Thermal shock*. The test housing shall be placed in a test chamber and exposed to the temperature cycle of Figure 2 for five complete cycles. The step function nature of the temperature changes may be achieved by insertion and removal of the test housing from the chamber. The soak time at each temperature shall be four hours. The housing shall be removed from the test chamber at the conclusion of the five-cycle period. After the test housing temperature has stabilized to room temperature, the housing must be inspected for deterioration of materials and satisfactory operation of mechanical functions. Figure 2 is as follows:

FIGURE 2
THERMAL SHOCK TEMPERATURE CYCLE

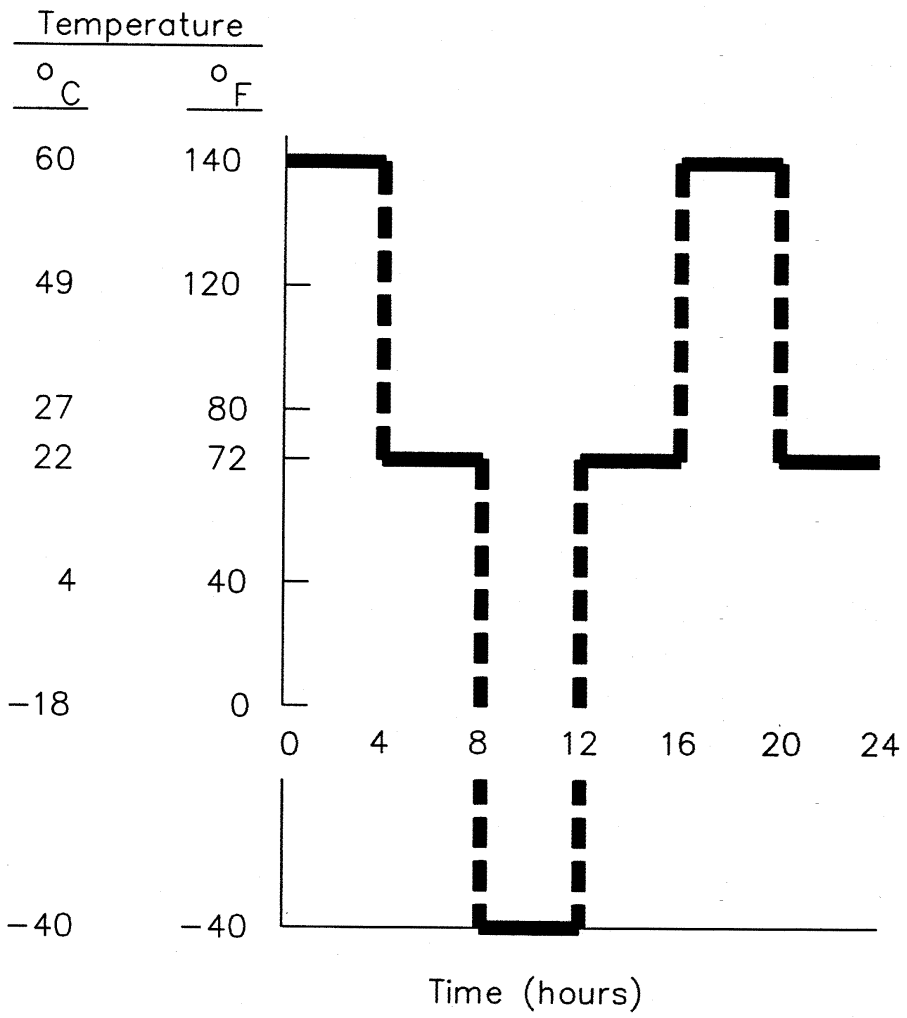

(ii) *Thermal shock and humidity.* The test housing shall be placed in an environmental test chamber at 95 ±3 percent (%) relative humidity (RH) and temperature cycled per Figure 3 for a period of 30 days. At the end of the test there shall be no rust or corrosion of any closure components. Minor corrosion due to surface scratches, nicks, etc. is permitted. If the closure is made of a nonmetallic material, there shall be no signs of degradation. Figure 3 is as follows:

FIGURE 3

ENVIRONMENTAL TEST CHAMBER TEMPERATURE CYCLE

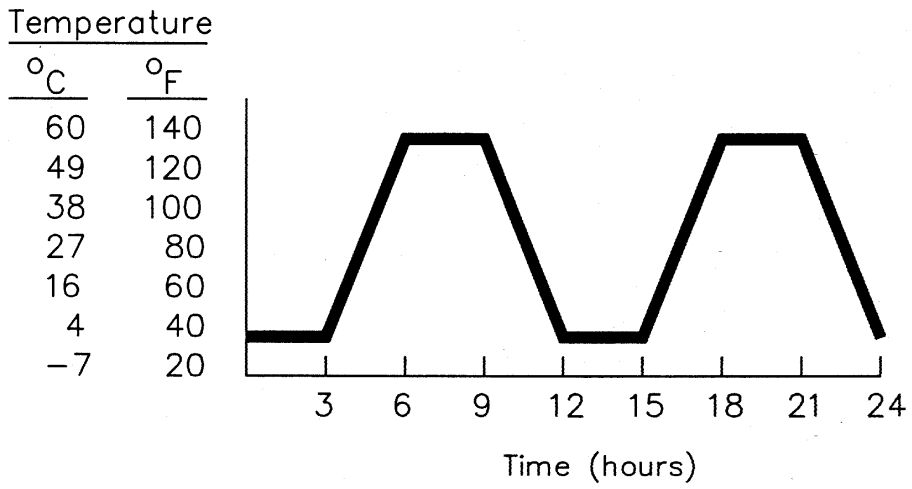

Note: Relative Humidity = 95% ± 3%

(iii) *Humidity and condensation.* Test panels shall be placed in an environmental chamber and subjected to 1,008 hours (42 cycles) of exposure per ASTM D 2247–92. One cycle consists of 24 hours of 100% humidity (with condensation on the panels) at a cabinet temperature of 38±1 °C (100±2 °F) and an ambient temperature of 25±1 °C (77±2 °F) without heat input. Upon completion of cycling, the test panels shall be subjected to an 11 newton-meter (N-m) (100 pound-inches (lb-in.)) impact test using the Gardner-Impact Tester or equivalent. Test panels shall show no substrate or coating cracking or loss of coating adhesion on either side.

(iv) *Weatherability.* Three test panels shall be tested for weatherability in accordance with the appropriate procedures of either ASTM D 822–89 or ASTM G 23–90. Total exposure time shall be a minimum of 800 hours. Failure is defined as fading, cracking, blistering, or delamination on any of the three test panels.

(v) *Low temperature durability.* Low temperature durability shall be proven by exposing the three test panels from (e)(3)(iv) of this section to at least 25 continuous cycles of the following test sequence:

(A) To insure complete saturation of the three test panels, soak them for 96 hours in a container of distilled water 22±2 °C (71.6±4 °F);

(B) Lower the temperature of the water and the immersed test panels to −28±2 °C (−18.4±4 °F) and stabilize for 24 hours;

(C) Thaw the water with the samples to 22±2 °C (71.6±4 °F) and stabilize for 24 hours;

(D) Repeat the procedure 24 times. Any cracking, crazing, deforming, or delaminating on any of the three test panels shall be considered a failure; and

(E) Remove the samples from the water and impact test the three panels by delivering a force of 11.3 N-m (100 lb-in.) using a Gardner-Impact Tester to each specimen at 71, 22, and −28±2 °C (159.8, 71.6, and −18.4±4 °F), after stabilizing them at those temperatures for at least two hours. Visual inspection shall reveal no deformation or perforations on any of the test panels.

(vi) *Corrosion resistance.* Corrosivity shall be tested in accordance with the requirements of ASTM B 117–90. Both scribed and unscribed panels shall be evaluated following the procedures of ASTM D 1654–92. Scribed panels shall have a rating of at least six, following 500 hours of exposure to salt fog, and the unscribed panels shall have a rating no lower than 10, after 1,000 hours exposure. Visual rust inspection shall confirm no more than 0.03% rusting (rust grade 9) of the surface area of the test sample when evaluated in accordance with ASTM D 610–85(1989). The unscribed samples shall be impacted with an 11.3 N-m (100 lb-in.) force, using a Gardner-Impact Tester or equivalent. Visual inspection of the impacted samples shall reveal no loss of adhesion between the base material and the coating or cracking at the finish on the test panels.

(vii) *Fungi resistance.* Fungi resistance of nonmetallic housing materials shall be tested according to the procedures of ASTM G 21–90. Any rating greater than one shall be considered a failure.

(viii) *Stress crack resistance.* The stress cracking characteristics of nonmetallic housing components shall be tested in accordance with ASTM D 1693–70 (Reapproved 1988). The tests shall be performed at 49±2½ C (120±4½ F) for 14 days and exposed to the following materials:

(A) Industry recognized filling compounds;

(B) Isopar M;

(C) Industry recognized solvents;

(D) Industry recognized encapsulants; and

(E) Commonly used insect, pest, and weed control products and agricultural fertilizers.

(ix) *Chemical resistance.* (A) Chemical resistance shall be determined by immersing representative nonmetallic material samples in each of the following solutions for 72 hours at 22±2 °C (71.6±4 °F):

(*1*) 3% sulfuric acid;

(*2*) 100 parts per million (ppm) trichloroethane in water;

(*3*) 0.2 N sodium hydroxide; and

(*4*) Unleaded high octane gasoline.

(B) There shall be no swelling, deformation, or softening of the material samples or any discoloration of the solution.

(x) *Ultraviolet resistance.* Test panels of metallic and nonmetallic outer housing materials shall be subjected to 700 hours exposure per ASTM D 2565–92 using the type BH apparatus. The panels shall not exhibit fading, blistering, checking, or delamination.

(xi) *Weathertightness.* The housing shall be mounted in its typical field installation position and sprayed with water. The temperature of the water shall be adjusted to be equal to or warmer than the temperature of the cabinet interior to avoid the possibility of condensation. A water spray head shall be used to direct water at the housing so that the water stream will strike the assembly at a downward angle of 45 degrees. The flow of the water shall be 3.8 liters per minute (one gallon per minute), with 276 kilopascals (40 pounds per square inch) head of pressure. The spray head shall be held 1.8 meters (m) (6 feet (ft)) from the test cabinet. The spray head shall be adjusted so that water impinges uniformly over the housing surface. The duration of the test shall be five minutes. All vertical cabinet surfaces shall be tested by this procedure. The exterior of the cabinet shall be thoroughly dried with towels (no heat drying) prior to examination of the housing interior. The interior of the housing shall be checked for presence of water. Wetting of over-lapping surfaces is permitted. There shall be no presence of water inside the housing.

(xii) *Wind Resistance.* (A)(*1*) Stub pole or wall mounted SAI and large pair

count splice housings shall be subjected to a load (F) as shown in Figure 4 and the following table to simulate the turning moment equivalent to a uniform wind load of 161 kilometers per hour (km/h) (100 miles per hour (mi/h)) perpendicular to the largest surface area.

Maximum area of largest surface square centimeters cm^2 (Square inches) ($in.^2$)	Load	
	kg	(lb)
5,200 (800) or less	18	(40)
5,201 to 9,100 (801 to 1,400)	32	(70)
9,101 to 13,000 (1,401 to 2,000)	45	(100)
13,001 to 16,200 (2,001 to 2,500)	57	(125)

NOTE: The procedures for housings with larger surface area will be evaluated by RUS on a case-by-case basis.

(*2*) The housing shall remain in its original mounting position throughout the test and exhibit no mechanical deformation.

(*3*) Figure 4 is as follows:

FIGURE 4

TURNING MOMENT – POLE MOUNTED HOUSINGS

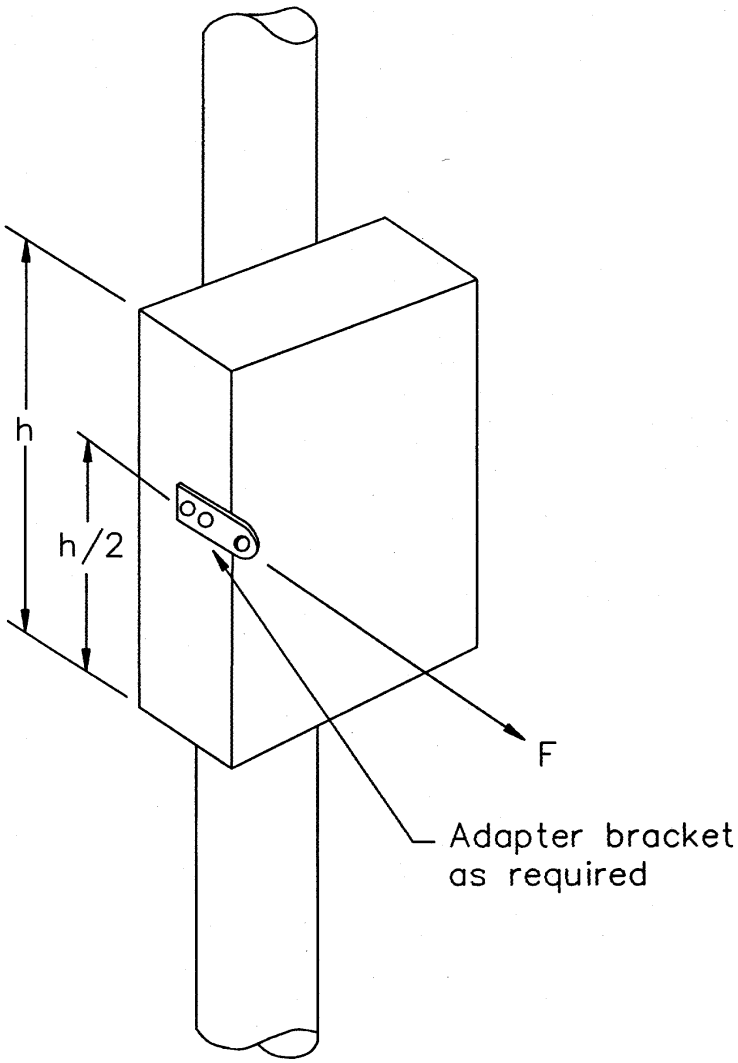

(B)(*1*) Pad or ground mounted SAI or splice housings shall be subjected to a load (F) as shown in Figure 5 and the following table to simulate the overturning moment equivalent to a uniform wind load of 161 km/h (100 mi/h) perpendicular to the largest surface area.

Height cm (in.)	Maximum area of largest surface cm² (in.²)	Load	
		kg	(lb)
122 (48) or less	11,000 (1,700) or less	91	(200)
	11,001–13,000 (1,701–2,000)	104	(230)
	13,001–14,900 (2,001–2,300)	118	(260)
123–152 (49–60)	11,700 (1,800) or less	91	(200)
	11,701–14,300 (1,801–2,200)	109	(240)
	14,301–16,200 (2,201–2,500)	127	(280)
	16,201–18,800 (2,501–2,900)	145	(320)
	18,801–20,800 (2,901–3,200)	163	(360)
	20,801–23,400 (3,201–3,600)	181	(400)
153–183 (61–72)	14,300 (2,200) or less	109	(240)
	14,301–16,900 (2,201–2,600)	127	(280)
	16,901–19,500 (2,601–3,000)	150	(330)
	19,501–22,700 (3,001–3,500)	172	(380)
	22,701–25,300 (3,501–3,900)	190	(420)
	25,301–27,900 (3,901–4,300)	213	(470)

NOTE: The procedures for housings with larger surface areas will be evaluated by RUS on a case-by-case basis

(*2*) The housing shall remain in its original mounting position throughout the test and exhibit no mechanical deformation.

(*3*) Figure 5 is as follows:

FIGURE 5

OVERTURNING MOMENT, PAD MOUNTED HOUSINGS

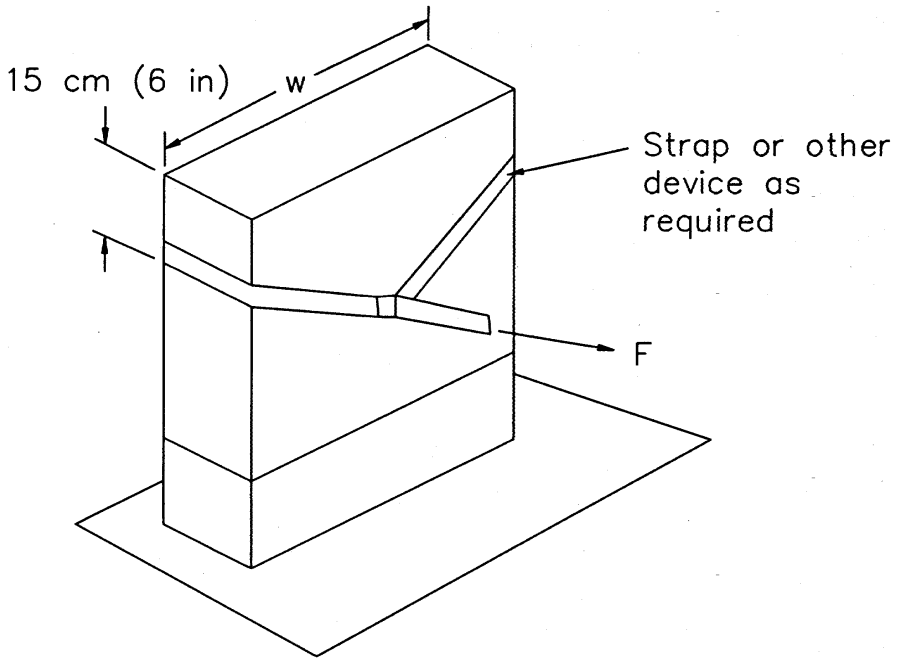

Notes:

1. The load "F" shall be applied perpendicular to the cabinet width where the width is greater than the depth.
2. If a foundation is used, the load "F" shall be applied toward the edge nearest to the cabinet.

(xiii) *Fire resistance.*(A) The test housing shall be installed in a manner typical of field installation. U.S. No. 1 wheat straw shall be placed on the ground around the housing base in an one meter (3 ft) radius at an approximate depth of 10 cm (4 in.). The straw shall be ignited and permitted to burn fully. After the housing has cooled, its contents shall be inspected for evidence of ignition, melting, burning, or structural damage. Damage sufficient to impair service constitutes failure.

(B) Polymeric materials shall be tested in accordance with the Underwriters Laboratories Publication (UL) 94, dated June 18, 1991. Materials used in housing components shall have a rating of 94V–0 or 94V–1 and shall not sustain combustion when an open flame source is removed.

(4) *Mechanical requirements for housings*—(i) *Impact resistance*. The test housing shall be subjected to the following impacts according to its minimum volume or minimum width and depth as shown in the following table:

Minimum volume cm^3 ($in.^3$)	Minimum width or depth cm (in.)	Impact force	
		N-m	(lb-ft)
Less than 35,000 (2,100).	Less than 13 (5)	68	(50)
35,000 (2,100) or greater.	13 (5) or greater	136	(100)

(A) The impact force shall be delivered to the front, back, and top surfaces. Circular housings shall be impacted on side surfaces 180 °apart and on the top. The device used to deliver the force shall be spherical and approximately 25 to 31 cm (10 to 12 in.) in diameter. A typical test procedure may include the use of a hard rubber bowling ball, weighing 6 to 7 kg (13 to 16 lb), enclosed in a mesh bag, attached to a rope with a metal ring. The load shall be dropped vertically on the top surface and applied to the sides with a pendulum motion using the appropriate height and extension arm to achieve the required impact force. The housing must be impacted at the approximate mid-point of the surface area.

(B) Housings shall be conditioned for a minimum of eight hours at −40 °C (−40 °F) in an environmental chamber prior to testing. If the chamber is insufficient in size to conduct tests within the chamber, the housing may be removed and shall be tested within 10 minutes after removal.

(C) After impact testing, the housing shall not exhibit fractured or ruptured surfaces sufficient to allow the ingress of moisture or dust. The housing shall not exhibit mechanical damage that would impair the functioning of hinges, latches, locks, etc.

(ii) *Load deflection*. Free standing buried plant housings shall be tested for load deflection in accordance with Figure 6. The assembled housing shall be rigidly held in place by a mechanical means to simulate a normal field installation. A length of wire or cable, or other suitable material, shall be placed around the top section of the housing and deadended. The wire or cable shall be initially tensioned to 23 kg (50 lb). A measurement shall then be taken of the deflection of the housing at the top as shown in Figure 6. The deflection shall be recorded at incremental loads of 23 kg (50 lb) until destruction of the housing occurs. The average load for the three directions shall not be less than 136 kg (300 lb) and the minimum load in any direction shall be 113 kg (250 lb). Failure is defined as housing component fracture or crazing of the housing's surface finish. Figure 6 is as follows:

FIGURE 6

MEASURING LOAD DEFLECTION

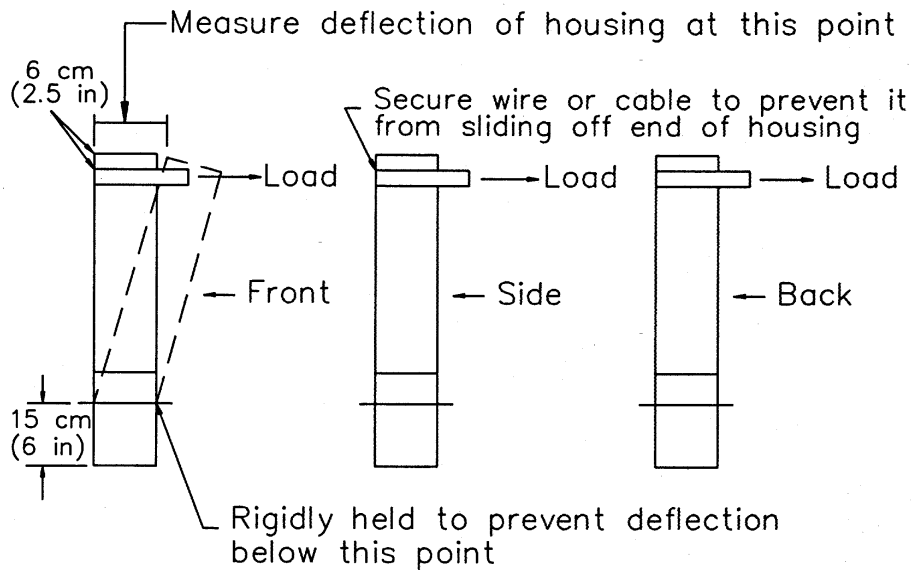

Notes:

1. One pedestal–mounted housing of each BD classification shall be tested to failure in each of the directions shown above.
2. A total of three pedestal–mounted housings of each BD classification shall be subjected to the required loads in each direction.
3. The average load for the three directions shall not be less than 136 kilograms (300 pounds). The minimum load shall be 113 kilograms (250 pounds).
4. Pole mounted housings shall be subjected to the same loading criteria.

(iii) *Vibration requirements.* The test housing and its contents shall be subjected to acceleration at a sine wave frequency sweep rate as shown in Figure 7 for a housing packaged for shipment and Figure 8 for an unpackaged housing. The frequency sweep may be performed continually or sequentially. The test shall be conducted once along each of three mutually perpendicular axes of the housing. There shall be no mechanical or electrical degradation of the housing or its contents. Noticeable damage to the housing constitutes failure. Figure 7 and Figure 8 are as follows:

FIGURE 7

VIBRATION TEST FOR PACKAGED HOUSINGS

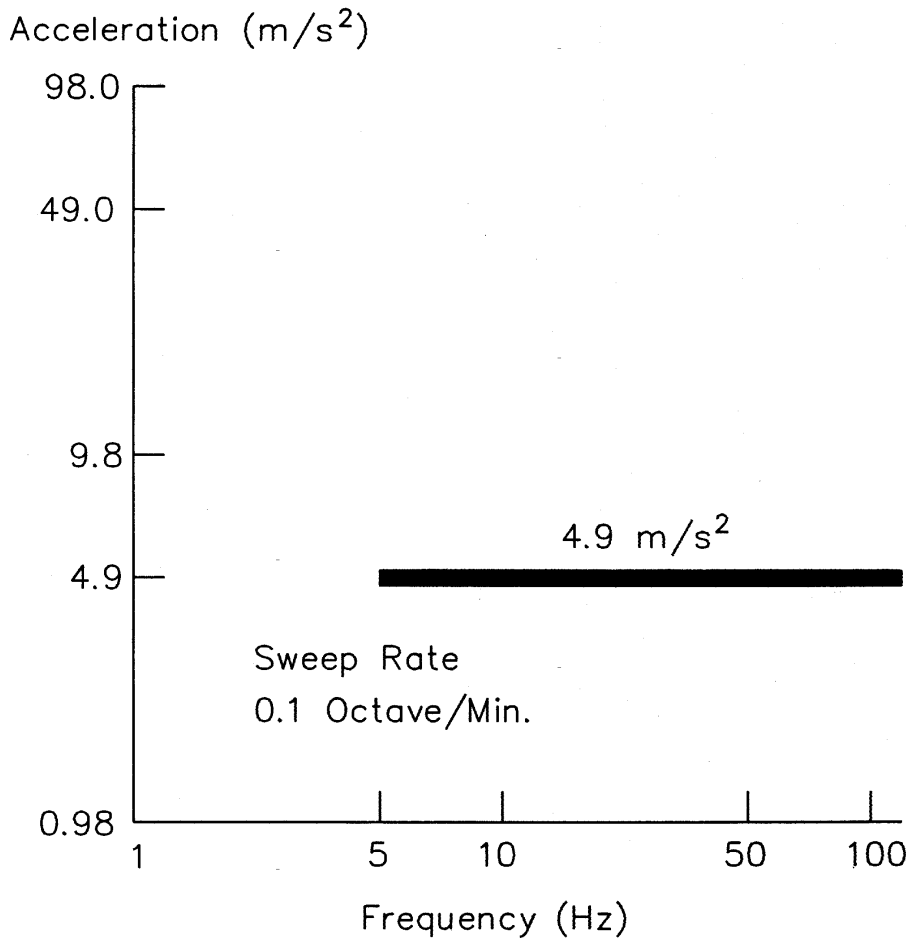

FIGURE 8

VIBRATION TEST FOR UNPACKAGED HOUSINGS

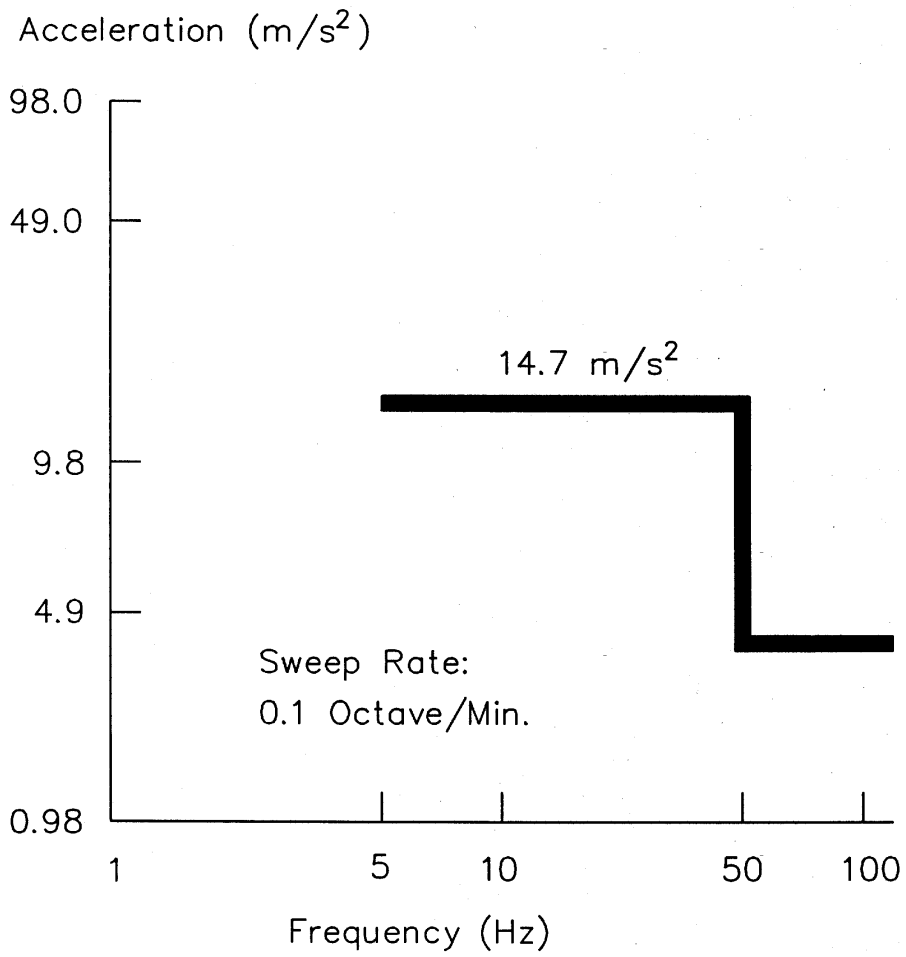

(iv) *Drop test requirements.* Housings shall be subjected to appropriate drop tests according to their weight. The drop tests shall be performed on housings and their contents as normally packaged as well as on unpackaged housings. The tests shall be conducted on a smooth level concrete floor or similar unyielding surface. For corner drops, the packaged housing and its contents shall be oriented at impact such that a straight line drawn through the struck corner and package geometric center is approximately perpendicular to the impact surface.

(A) Packaged housings and their contents weighing 91 kg (200 lb) or less

shall be capable of enduring a single drop on each face or corner without damage from a height specified as follows:

Packaged housing including contents weight kg (lb)	Drop height cm (in.)
0 to 9 (0 to 20)	76 (30)
10 to 23 (21 to 50)	61 (24)
24 to 45 (51 to 100)	53 (21)
46 to 91 (101 to 200)	46 (18)

(B) Packaged housings and their contents weighing more than 91 kg (200 lb) shall be capable of enduring a single drop on each of two diagonally opposite corners of the package without significant damage from a height specified as follows:

Packaged housing including contents weight kg (lb)	Drop height cm (in.)
92 to 453 (201 to 1000)	30 (12)
Over to 453 (1000)	15 (6)

(*1*) The packaged housing and contents shall be placed on its normal shipping base with one corner supported 15 cm (6 in.) above the floor and the other corner of the same end supported 30 cm (12 in.) above the floor as shown in Figure 9. The unsupported end of the package shall be raised so that the lowest corner reaches the height listed above and then allowed to fall freely. Figure 9 is as follows:

FIGURE 9

CORNER DROP TESTS FOR PACKAGED HOUSINGS WEIGHING MORE THAN 91 KILOGRAMS (200 POUNDS)

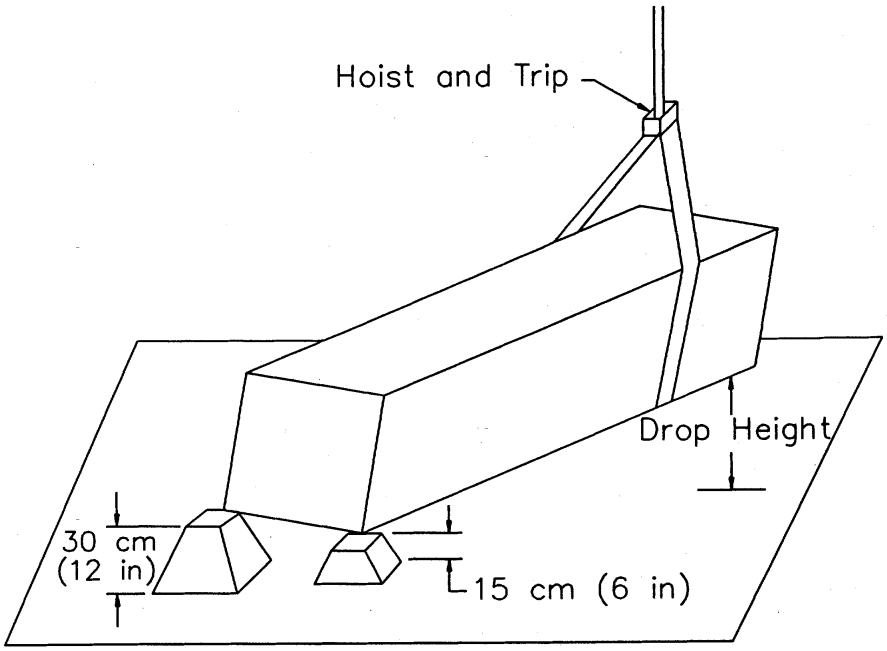

(*2*) The procedure of paragraph (e)(4)(iv)(B)(*1*) of this section shall be repeated for the diagonally opposite corner.

(*3*) The packaged housing and contents shall be capable of enduring a single drop on each edge of the base of its normal shipping position from the required height without damage and shall remain operational without function impairment. The packaged housing and contents shall be placed on its base with one edge supported on a sill 15 cm (6 in.) high and the unsupported edge raised to the required height as shown in Figure 10 and allowed to fall freely. Figure 10 is as follows:

FIGURE 10

EDGE DROP TEST FOR PACKAGED HOUSINGS WEIGHING MORE THAN 91 KILOGRAMS (200 POUNDS)

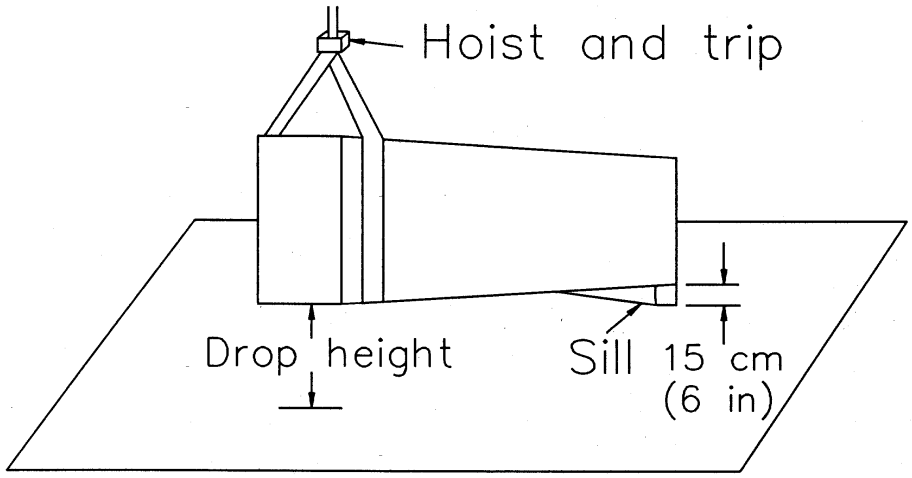

(*4*) The procedure of (e)(4)(iv)(B)(*3*) of this section shall be repeated for all edges of the base.

(C) Unpackaged housings and their contents weighing 23 kg (50 lb) or less shall be capable of enduring a single drop on each face and adjacent corners without significant damage from a height specified as follows:

Packaged housing including contents weight kg (lb)	Drop height cm (in.)
0 to 9 (0 to 20)	10 (4)
10 to 23 (21 to 50)	8 (3)

(D)(*1*) Unpackaged housings and their contents weighing more than 23 kg (50 lb) shall be capable of enduring a single drop without significant damage when lifted by its normal hoisting supports as shown in Figure 11 and with its lowest point at a height specified as follows:

Packaged housing including contents weight kg (lb)	Drop height cm (in.)
23 to 45 (51 to 100)	5 (2)

(*2*) Figure 11 is as follows:

FIGURE 11

DROP TEST FOR UNPACKAGED HOUSINGS WEIGHING MORE THAN 23 KILOGRAMS (50 POUNDS)

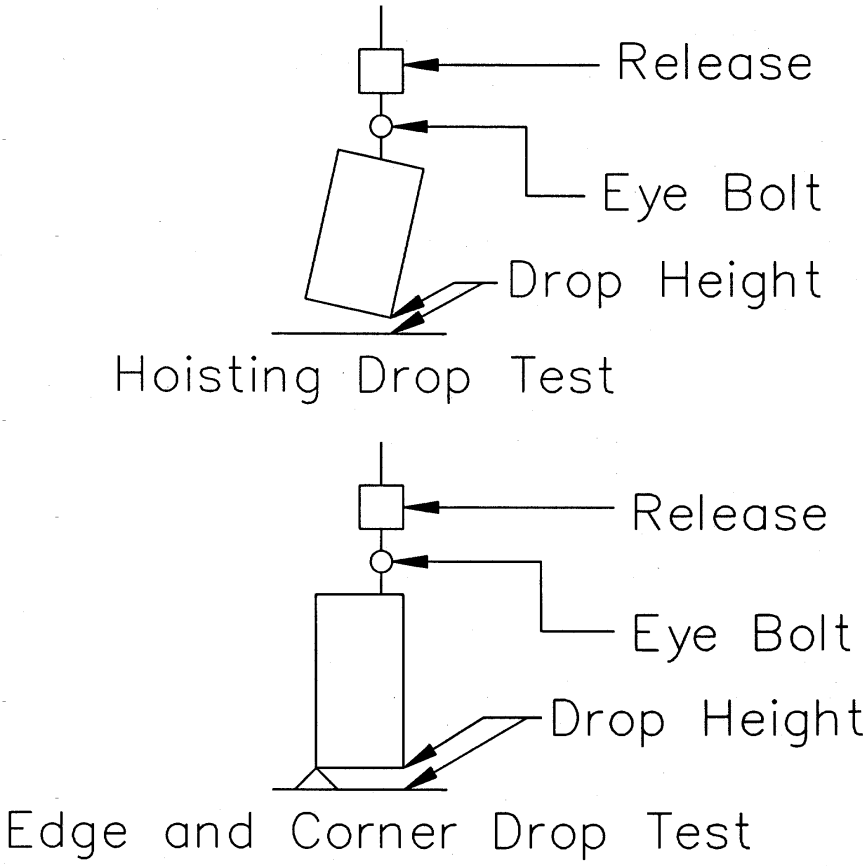

(v) *Firearms resistance.* All housings shall be tested for resistance to penetration by direct impact from a 12 gauge shotgun equipped with a modified choke and the use of a 3¾ dram equivalent powder charge and 35 grams #6 lead shot fired from a distance of 15 m (50 ft). The 12 gauge shotgun shall be fired from a normal standing position at the front side of the housing. Penetration through the housing wall by the lead shot shall constitute failure.

(vi) *Lifting hardware requirements.* The lifting hardware on housings and their contents that weigh more than 91 kg (200 lb) shall be tested. The housing shall be fastened to a restraining device such as a concrete slab and subjected to loading through the lifting attachments to simulate the lifting

load. For the first test a lifting line equipped with a dynamometer shall be attached to the housing lifting hardware and a load applied equal to three times the weight of a fully equipped housing. Deformation or damage to the housing or lifting hardware constitutes failure. A second test shall be conducted with the same arrangements as for the first except that a load shall be applied equal to six times the weight of a fully equipped housing. There shall be no catastrophic failure of the lifting hardware or housing.

(vii) *Stub cable strain relief tests.* Housings equipped with cable stubs and cable shipping retainer shall be tested by lifting a test housing, with the maximum length and weight of cable orderable, in a manner causing the full weight of the cable to be supported by the cabinet. Examination of the cable sheath after lifting shall reveal no tearing, rupturing, or other damage. The cable conductors and shield shall be tested for shorts and opens. Electrical defects to the stub cable or damage to the housing constitutes failure.

(viii) *Door restrainer evaluation.* (A) The housing shall be positioned with the door held in the open position by the door restraining device. A load, determined in accordance with the following table, shall be applied to the center of the door, perpendicular to the door and in each of the opening and closing directions.

Maximum area of door surface cm^2 (in^2.)	Load kg (lb)
5,200 (800) or less	72 (160)
5,201 to 9,100 (801 to 1,400)	127 (280)
9,101 to 13,000 (1,401 to 2,000)	181 (400)

NOTE: Test procedures for housings with larger doors will be evaluated by RUS on a case-by-case basis.

(B) There shall be no functional failure of the restraining device nor mechanical damage to the housing.

(ix) *Security evaluation.* The security locking device shall be capable of withstanding a maximum torque of 2.8 N-m (25 lb-in.) without incurring physical damage to the closure, thereby resulting in a condition where the closure cannot be either accessed or locked.

(5) *Electrical requirements for housings.* Each bonding stud and nut location shall be evaluated by attaching one lead from a dc or alternating current (ac) power source to a bonding stud with the nut torqued as specified by its manufacturer and the other power source lead connected to the closure grounding conductor connector. The current path thus established must be capable of sustaining a current of 1,000 amperes root-mean-square for at least 20 seconds without fusing or causing any damage to the closure or its contents.

(6) *Finish requirements*—(i) *Impact resistance.* The finish on painted metal surfaces shall not exhibit radial cracking on the impact surface (intrusion) when indented at 18 N-m (160 lb-in.) with a 1.6 cm (0.6 in.) diameter spherical indentor. This test shall be performed in accordance with ASTM D 2794–92 with the exception that the test panel shall be of the same material, thickness, and finish as the pedestal housing being evaluated.

(ii) *Finish adhesion.* Painted finishes shall be tested for adhesion of finish in accordance with ASTM D 2197–86 (Reapproved 1991), Method A. There shall be no gouging in the top coat when tested with an 8 kg (17.7 lb) load. Gouging is defined as removal or separation of paint particles or breaking of the finish by the scraping loop to the extent of exposing base metal.

(iii) *Color evaluation.* The color of the housing finish should be compared against the Munsell system of color notation, as described in ASTM D 1535–89 to determine color consistency with that desired.

(iv) *Gloss evaluation.* The finish on painted housings shall be tested on two approximately 20 cm × 20 cm (8 in. × 8 in.) samples for each color used in accordance with the procedures of ASTM D 523–89. The finish shall have a minimum gloss of 60 (60 °Specular).

(v) *Secondary finish evaluation.* Evidence of secondary protection shall be required for RUS acceptance. Typical secondary protection is galvanizing per ASTM A 526/A 526M–90 for steel surfaces.

(f) *Functional design criteria for binding post terminal blocks used in SAI cabinets*—(1) *General description.* A conventional binding post terminal consists of a metallic element or post, one end of which is configured for the permanent connection of 22, 24, or 26 AWG solid copper conductors and the opposite end

is configured for recurring connections and disconnections of solid copper cross-connect wire using a threaded screw or stud and nut combination for gripping the wire. The terminal is usually housed in a SAI cabinet. However, the terminal may receive limited use in smaller pedestal-type housings and pole mounted cabinets in the outside plant environment.

(2) *Design and fabrication requirements.* (i) Terminal blocks used in outside plant housings are expected to perform satisfactorily for a nominal design life of 30 years.

(ii) All individual terminals or terminal fields must be enclosed and the terminal enclosure must be totally filled with an encapsulating grease or gel which prevents connection degradation caused by moisture and corrosion. The encapsulant must provide complete encapsulation of terminal metallic connections and surfaces and totally fill all voids and cavities within individual terminal enclosures or terminal field enclosures to prevent ingress of moisture. The encapsulant must not restrict access to the terminal or restrict craft personnel from making connections. The encapsulant must be compatible with the standard materials used in cross-connect hardware and wiring.

(iii) Binding post terminals shall not be susceptible to damage under normal use of standard tools used by outside plant technicians such as screwdrivers and test set clips. In addition, use of other tools such as scissors, diagonal cutters and long nose pliers for tightening and loosening screws shall not result in damage to the terminal.

(iv) Terminals shall be designed so that a typical technician using customary tools shall be able to terminate cross-connect wire on a pair of terminals, or to remove it, without causing an electrical short between any two terminals or any other adjacent terminals.

(v) The terminal count sequence shall be indicated using numerals of at least 0.25 cm (0.10 in.) in height.

(vi) A means shall be provided to distinguish feeder terminals from distribution terminals.

(vii) A means shall be provided to identify tip terminals and ring terminals in a terminal field. The identification convention shall indicate tip on the left with ring on the right for horizontal spacing and tip on the top with ring on the bottom for vertical spacing.

(viii) The preferred height of the highest terminal in the connector field in a ground mounted SAI unit shall be 168 cm (66 in.) or less as measured from the top surface of the mounting pad. The bottom or lowest terminals in the connector field shall be at least 46 cm (18 in.) from the top surface of the pad.

(ix) Pole mounted aerial units shall be 84 cm (33 in.) or less in width. The maximum allowable height of the highest terminals in a pole mounted aerial unit is 168 cm (66 in.) as measured from the top surface of the standard balcony seat used with the interface. For computation purposes, 15 cm (6 in.) shall be allowed for the distance between the bottom of the interface and the top of the balcony seat.

(3) *Auxiliary features.* (i) SAI cabinets with terminal designs which do not permit direct attachment of common test instrument clips to terminal pairs without the occurrence of shorts shall be equipped with single pair auxiliary test contacts. The auxiliary test contacts shall attach to a terminal pair and provide a set of secondary terminals which will accept typical test instrument clips without the occurrence of shorts. Wire used to connect the auxiliary test contacts to the secondary terminals shall be 20 gauge minimum stranded conductor copper wire with a minimum dielectric strength between conductors of 15 kv. The test connector shall be functional on all terminal pairs.

(ii) A 25 or 50 pair test connector shall be available which can be used to make reliable electrical contact to terminals associated with discrete 25 pair binder groups. The multi-pair test connector shall be provided with a minimum of 1.8 m (6 ft) of suitable cabling terminated to a connector, for interfacing with test sets common to the industry. The multi-pair test connector shall be functional on all terminal groups.

(iii) A special service marker shall be available which must attach to a binding post terminal to identify special circuits and insulate exposed metal

parts from accidental shorts from tools and wires. A supply of 25 special service markers shall be provided with each SAI cabinet. The color of special service markers shall be red.

(iv)(A) A supply of twisted pair cross-connect wire shall be supplied with housings that are equipped with cross-connect terminals or that have provisions for mounting cross-connect terminals. The minimum length of cross-connect wire supplied is dependent on the SAI cabinet terminal capacity as follows:

Cabinet termination capacity (pairs)	Wire length
1 to 600	60 m (200 ft)
601 to 1200	120 m (400 ft)
Over 1200	180 m (600 ft)

(B) The cabinet shall be equipped to store the length of wire in a manner designed for convenient dispensing. The cross-connect wire supply shall be easily replaceable.

(g) *Performance criteria and test procedures for binding post terminal blocks used in SAI cabinets*—(1) *General.* Many of the tests described in this section require that the terminal block be installed in an appropriate housing in its typical field configuration.

(2) *Environmental requirements*—(i) *Insulation resistance/high humidity and salt fog exposure.* A test specimen shall consist of a standard ground or pole mounted housing equipped with a full complement of binding post terminals equipped with 25 special service markers. The minimum number of terminals to be tested shall be 100 pair (100 tips and 100 associated rings). The test terminals shall be selected to form a terminal array of approximate square dimensions. A 1 cm (36 in.) length of cross-connect wire shall be installed on each test terminal. All tips shall be joined together and all rings shall be joined together with a 48 volt dc potential applied as shown in Figure 12 during the high humidity/salt fog and simulated rain exposures. The 48 volt dc may be temporarily removed from the test samples during the measurement process and the ring terminal being measured shall be isolated from the remaining ring terminals. The terminal insulation resistance shall be measured at a potential of 100 volts dc using suitable instrumentation with a minimum measurement range of 10^4 to 10^{12} ohms. Figure 12 is as follows:

FIGURE 12

BINDING POST ARRANGEMENT FOR INSULATION RESISTANCE TESTING

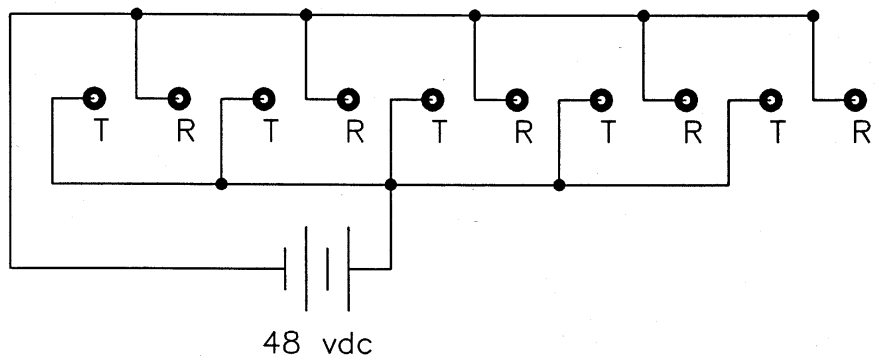

Note: 5 pair specimen arrangement shown is typical for entire (100 pair specimen minimum) test population.

(A) *High humidity*. The test housing shall be placed in an environmental test chamber at 95±3% RH and the temperature cycled as shown in Figure 3 in paragraph (e)(3)(ii) of this section for a period of 30 days. The cabinet doors shall remain in the fully open position. The insulation resistance between the ring terminal of each sample and all the common tip terminals shall be measured each 24 hours when the temperature is between 38 and 57 °C (100 and 135 °F) and increasing. The minimum insulation resistance when measured in accordance with paragraph (g)(2)(i) of this section shall not be less than 1×10^6 ohms.

(B) *Salt fog*. A test housing with its doors closed shall be placed in a salt fog 35 °C (95 °F) test chamber and exposed to a salt fog spray per ASTM B 117–90 for a period of 30 days. The insulation resistance should be measured every 24 hours as indicated in paragraph (g)(2)(i) of the section and shall not be less than 1×10^6 ohms. The special service markers shall exhibit no sign of fading, corrosion, swelling, warping, running color, or other signs of deterioration.

(ii) *Insulation resistance/simulated rain exposure*. (A) A test housing as described in paragraph (g)(2)(i) of this section shall be tested for water infiltration. The test shall be conducted using the method described in paragraph (e)(3)(xi) of this section. The cabinet doors shall remain closed for the duration of the test. The insulation resistance between the ring terminals and the common tip terminals shall be measured during and immediately following the spray application as indicated in paragraph (g)(2)(i) of this section and shall not be less than 1×10^6 ohms.

(B) With the cabinet doors open, a spray of tap water at a rate of 3.8 liters per minute (1 gallon per minute) at 276 kilo-pascals (40 pounds per square inch)

shall be directed on the terminal array for a period of 1 minute saturating all of the terminals. Following the spray application the doors shall be closed. The cabinet shall be maintained in a temperature environment of 26 to 28 °C (78 to 82 °F) at 95±3% RH for 6 hours. The insulation resistance shall then be measured as specified in paragraph (g)(2)(i) of this section. The minimum insulation resistance shall not be less than 1×10^6 ohms.

(iii) *Contact resistance.* A minimum of 100 terminals equipped with cross-connect wire that has been installed in a manner typical of that used in the industry shall be temperature cycled.

(A) The test shall consist of eight-hour temperature cycles with one-hour dwells at extreme temperatures of −40 °C to +60 °C (−40 °F to +140 °F), and temperature changes at an average rate of 16 °C (60 °F) per hour between the extremes. The relative humidity shall be maintained at 95±3%. The eight-hour test shall be conducted for 512 cycles. Millivolt drop measurements shall be made initially and after 2, 8, 16, 32, 64, 256, and 512 cycles with the samples at room temperature. The resistance measurement technique must conform to ASTM B 539–90. The measurement method must have an accuracy of at least ±30 microohms for resistances less than 50 milliohms. The change in contact resistance shall not exceed 2 milliohms.

(B) A minimum of 100 terminals equipped with cross-connect wire installed in a manner typical of the industry shall be maintained at 118 °C (245 °F) during the test period, except during disturbance measurement periods where each wire connection to the terminals shall have a 0.23 kg (0.5 lb) force momentarily applied in a manner to stress the connection. Initial millivolt measurements shall be made without disturbing the joints in accordance with paragraph (g)(2)(iii)(A) of this section with the samples at room temperature. After initial measurement each sample shall be disturbed followed by a millivolt drop measurement after 1, 2, 4, 8, 16, and 33 days. The change in contact resistance should be less than 2 milliohms when compared to the initial measurement.

(iv) *Fire resistance.* A fully equipped cabinet including a full complement of cross-connect jumpers shall be installed in the standard field arrangement and tested for fire resistance in accordance with paragraphs (e)(3)(xiii) introductory text through (e)(3)(xiii)(B) of this section. After cooling, the cabinet, terminals, and associated wiring shall be inspected for signs of ignition, melting, burning, or structural damage of sufficient consequences such that the results are service affecting.

(v) *Encapsulant material compatibility.* The terminal connection encapsulant compound must be compatible with the standard materials used in cross-connect hardware and wiring when aged in accordance with ASTM D 4568–86 at a temperature of 80±1 °C (176 ±2 °F). The conductor insulation shall retain a minimum of 85% of its unaged tensile strength and elongation values. The cross-connect hardware shall exhibit no visible material degradation.

(vi) *Encapsulant flow test.* Terminal connection encapsulant must remain stable at 80±1 °C (176±2 °F) when tested in an environmental chamber. Test specimens shall be suspended in a preheated oven over a glass dish or other drip-catching medium for a period of 24 hours. At the end of the test period, the glass dish shall be examined for evidence of flowing or dripping of encapsulant from the cross-connect terminal. More than 0.5 gram of encapsulant in the dish at the end of the test constitutes failure.

(3) *Mechanical requirements*—(i) *Vibration.* A test housing equipped with a full complement of cross-connect terminals and jumper wiring shall be subjected to vibration testing in accordance with paragraph (e)(4)(iii) of this section.

(ii) *Torsional capacity of binding posts.* The test specimens shall consist of the complete binding post terminal consisting of the screw or nut, washers if required, and threaded post or stud respectively.

(A) Test specimens shall include the terminals along the matrix edge at mid-span locations as well as centrally located terminals. Tests shall be conducted using a torque indicating screwdriver, or wrench, with an accuracy of

±0.17 N-m (±1.5 lb-in.) or better. The torque indicating device shall be used to tighten a screw or nut until failure of the screw or nut is achieved. Tests shall be conducted while the test specimen is stabilized at temperatures of −40 °C, 20 °C, and 71 °C (−40 °F, +68 °F, and at +160 °F). Record the torques at terminal failure. At least 10 test specimens shall be tested at each temperature. The failure torque shall not be less than 2.8 N-m (25.0 lb-in.) for each temperature.

(B) The post or stud of the binding post terminal shall not fail before the screw or nut when increasing torque. The faceplate or receptacle restraining the post or stud shall not fail before the screw or nut when increasing torque.

(iii) *Lateral loading capacity of binding posts.* A minimum of three sets of 25 terminals shall be tested with the test specimens stabilized at temperatures of −40 °C, 20 °C and 71 °C (−40 °F, +68 °F, and 100 °F). The test arrangement shall include the terminals along the matrix edge at mid-span locations as well as centrally located terminals. A force measuring device, such as a dynamometer, shall be attached to the end of a binding post terminal and a 16 kg (35 lb) force applied orthogonally to the terminal axis in 4 perpendicular directions as shown in Figure 13. Permanent deformation in excess of 0.08 cm (0.03 in.) or any structural damage in either the terminal or faceplate constitutes a failure. Figure 13 is as follows:

FIGURE 13

LATERAL LOADING OF BINDING POST TERMINALS

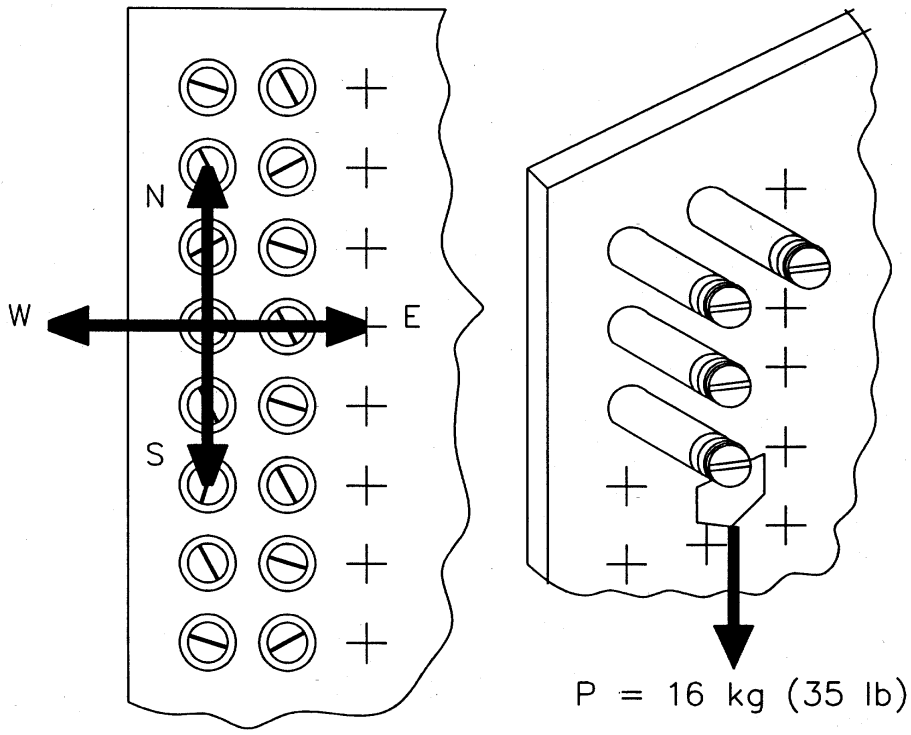

Note: Apply load P in N, E, S, and W directions

(iv) *Axial pullout resistance.* A minimum of three sets of 25 terminals shall be tested with the test specimens stabilized at temperatures of −40 °C, 20 °C, and 71 °C (−40 °F, +68 °F, and 100 °F). The test arrangement shall include the terminals along the matrix edge at mid-span locations as well as centrally located terminals. A force measuring device, such as a dynamometer, shall be attached to a terminal and a force of 16 kg (35 lb) applied on axis as shown in Figure 14. There shall be no permanent deformation in excess of 0.08 cm (0.03 in.), any structural damage, or terminal pull-out in either the terminal or the faceplate. Figure 14 is as follows:

FIGURE 14

AXIAL PULLOUT OF BINDING POST TERMINALS

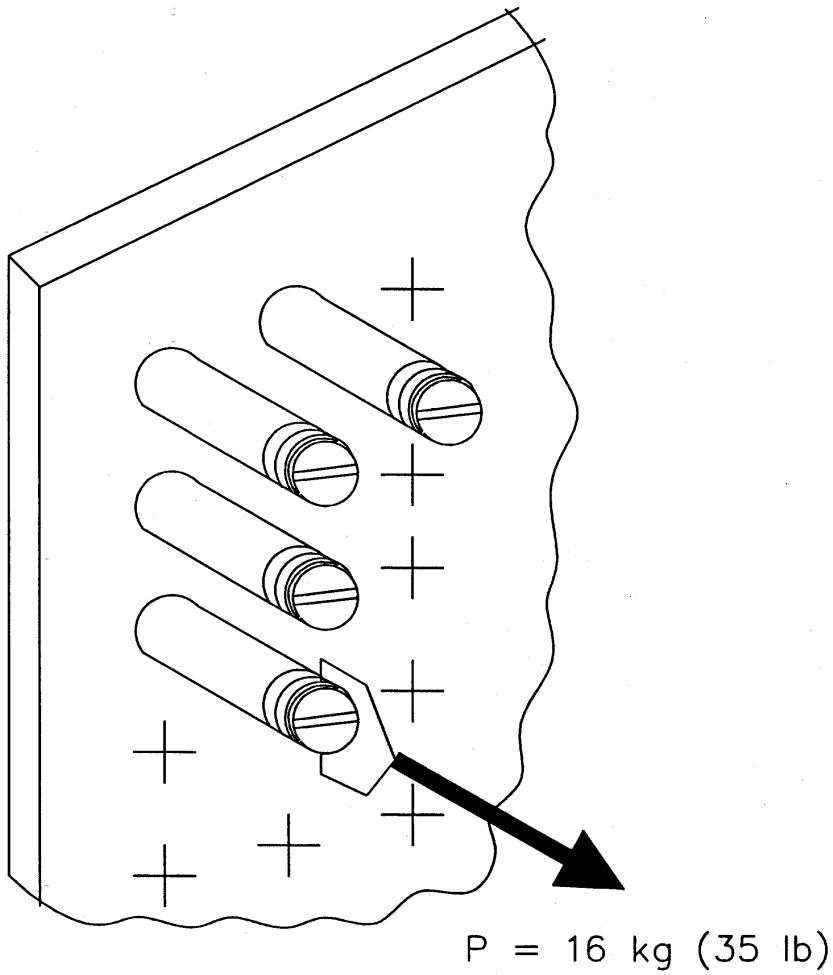

(v) *Test connector reliability.* (A) A single pair connector shall be capable of making a minimum of 100 successive connections to binding post terminals without the occurrence of an open circuit. The test shall include terminals along the matrix edge, center, top, and bottom.

(B) A multi-pair test connector shall be attached to the binding post terminal field and tests for opens between the binding post terminals and the test

connector shall be conducted. All circuits must prove good. The test shall be repeated along the terminal matrix edges, center, top, and bottom.

(vi) *Service cycle reliability*. A torque indicating device or wrench with an accuracy of ±0.17 N-m (±1.5 lb-in.) or better shall be used to tighten the terminal screw or nut as appropriate to 1.7 N-m (15.0 lb-in.). The terminal nut or screw is then loosened and retightened to 1.7 N-m (15 lb-in.). After 50 repeated connections and disconnections, the terminal shall be placed in an environmental chamber at 95% RH where the temperature shall be cycled as indicated in Figure 3 in paragraph (e)(3)(ii) of this section for a duration of 72 hours. The terminal shall then be momentarily removed from the chamber and the test procedure repeated. After a total of 250 loosening and retightening cycles have accumulated, the terminal must be capable of withstanding a torque of 1.7 N-m (15 lb-in.).

(4) *Dielectric strength*. All housing components in the vicinity of unsheathed field cable conductors, unsheathed housing stub cable or harness conductors, terminals, or cross-connect wire paths shall have a minimum dielectric strength of 500 volts ac to the cabinet grounding and bonding bracket. Dielectric strength is tested by connecting one lead from a 500-volt ac at 0.5 ampere source to the cabinet ground connector and the other lead is passed along the surfaces of all cabinet components in the vicinity of unsheathed cable or harness conductors, cross-connect wire paths, and in the splice area where unsheathed field cable conductors may be located. Sparkover constitutes failure.

(5) *Operational requirements*—(i) *Durability*. In order to verify the durability requirements while minimizing the number of test housings required to complete the test program, the binding posts selected for tests shall be separately identified and then checked to establish compliance after the various tests have been conducted.

(ii) Twenty-five jumper connections shall be made on each of two binding post connectors chosen at random from a representative sample in an assembled interface unit. After exposure to this test, these and adjacent connectors shall be inspected for damage such as cracks or chips in metal or plastic parts. Failure consists of structural damage, open circuits through the connector, or inability to pass the torsional, lateral loading, or axial pullout tests described in paragraphs (g)(3)(ii) through (g)(3)(iv) of this section.

(iii) Select six binding posts at random in a representative interface. On each connector, attach any test cord included with the unit and then remove the test cord as follows. On binding post sample 1, remove the cord normally ten times. On binding post sample 2, remove the cord ten times by jerking the test leads straight out. In these and the remaining tests, do this without releasing any manual attachment mechanisms. On sample 3, remove ten times by jerking downward at 45 °from horizontal; sample 4, upward at 45 °ten times; sample 5, left 45 °ten times; sample 6, right 45 °ten times. Check for opens and damage in the test cord, clips, and connectors. Failure consists of structural damage, open circuits through the connector, or inability of the terminal blocks to pass the torsional, lateral loading, axial pullout, test connector reliability, or dielectric strength tests described in paragraphs (g)(3)(ii) through (g)(3)(v)(B), and paragraph (g)(4) of this section.

(iv) Use craft tools such as scissors, diagonal cutters, and long nose pliers to loosen and tighten screws where the binding post design does not prohibit the possibility. Failure consists of severe structural damage.

(h) *Functional design criteria for insulation displacement type cross-connect modules used in SAI cabinets*—(1) *General* description. Cross-connect modules normally consist of multiple metallic contact elements that are retained by nonmetallic fixtures. The contact elements are spliced with permanent wire leads compatible for splicing to 22, 24, or 26 gauge cable on one side and configured for the acceptance of recurring connections and disconnections of plastic insulated cross-connect wire on the other side. Cross-connect modules are usually housed in a SAI cabinet. However, modules may receive limited usage in smaller pedestal-type

housings and cabinets in the outside plant environment.

(2) *Design and fabrication requirements.* (i) All individual terminals or terminal fields must be enclosed and the terminal enclosures must be totally filled with an encapsulating grease or gel which prevents connection degradation caused by moisture and corrosion. The encapsulant must provide complete encapsulation of terminal metallic connections and surfaces and totally fill all voids and cavities within individual terminal enclosures or terminal field enclosures to prevent ingress of moisture. The encapsulant must not restrict access to the terminal or restrict craft personnel from making connections. The encapsulant must be compatible with the standard materials used in cross-connect hardware and wiring.

(ii) The cross-connect module manufacturer shall make available any nonstandard tools and test apparatus which are required for splicing, placing of jumpers, and the performance of maintenance operations.

(iii) The module shall be designed so that a typical outside plant technician using tools shall be able to terminate cross-connect wire on terminals, or to remove them without causing electrical shorts between any other terminals.

(iv) The pair count sequence terminated on a module shall be easily visible and shall have numerals of at least 0.25 cm (0.10 in.) in height.

(v) Feeder terminations shall be easily distinguished from distribution terminations.

(vi) Tip and ring terminations shall be easily visible and shall be identifiable as described in paragraph (f)(2)(vi) of this section.

(vii) The preferred locations for cross-connect modules to be mounted inside a housing is the same as those for terminals and are described in paragraphs (f)(2)(vii) and (f)(2)(viii) of this section.

(3) *Auxiliary features.* (i) Housings equipped with cross-connect modules shall be equipped with auxiliary test contacts as described in paragraphs (f)(3)(i) and (f)(3)(ii) of this section.

(ii) Special service markers shall be available for cross-connect modules as described in paragraph (f)(3)(iii) of this section.

(iii) Housings equipped with, or designed for, cross-connect modules shall contain a supply of cross-connect wire as described in paragraph (f)(3)(iv) of this section.

(i) *Performance criteria and test procedures for insulation displacement type cross-connect modules*—(1) *General.* Many of the tests described in this section require that the cross-connect module be installed in an appropriate housing in its typical field configuration for testing. Resistance measurements should be made with an electrical device which measures changes in resistance for each test parameter measured. The tests specified provide an indication of the stability of the electrical connections under the test conditions encountered.

(2) *Environmental requirements.* (i) A fully equipped arrangement of cross-connect modules having approximately 25 special service markers shall successfully complete environmental testing in accordance with paragraphs (e)(3) introductory text through (e)(3)(xiii)(B) of this section.

(ii) *Insulation resistance/high humidity and salt fog exposure.* Insulation resistance measurements shall not be less than 1×10^6 ohms when cross-connect modules are tested by a procedure similar to that described in paragraphs (g)(2)(i) introductory text through (g)(2)(i)(B) of this section.

(iii) *Insulation resistance/simulated rain exposure.* Insulation resistance measurements shall not be less than 1×10^6 ohms when cross-connect modules are tested by a procedure similar to that described in and paragraphs (g)(2)(ii) introductory text through (g)(2)(ii)(B) of this section.

(iv) *Contact resistance.* The change in contact resistance should not exceed 2 milliohms when cross-connect modules are tested by a procedure similar to that described in paragraphs (g)(2)(iii) introductory text through (g)(2)(iii)(B) of this section.

(v) *Fire resistance.* A housing fully equipped with cross-connect modules and jumper wiring shall be tested for fire resistance by a procedure similar to that described in paragraph (g)(2)(iv) of this section.

(vi) *Encapsulant material compatibility*. Cross-connect wire insulation and cross-connect hardware shall exhibit no visible material degradation when tested by the procedure described in paragraph (g)(2)(v) of this section.

(vii) *Encapsulant flow test*. The cross-connect contact encapsulant shall drip no more than 0.5 gram when tested by the procedure described in paragraph (g)(2)(vi) of this section.

(3) *Mechanical requirements*—(i) *Vibration*. A housing fully equipped with cross-connect modules shall be vibration tested in accordance with paragraph (g)(3)(i) of this section.

(ii) *Test connector reliability*. The test connectors supplied with housings intended for cross-connect modules shall successfully complete 100 successive connections as described in paragraphs (g)(3)(v) introductory text through (g)(3)(v)(B) of this section.

(iii) *Service cycle reliability*. A combination of multiple insertions of jumper wires, vibration, and temperature cycling shall be performed on cross-connect modules. The multiple insertions on approximately 100 connections shall be accomplished by 300 operations consisting of insertion, removal and reinsertion of new jumper wire. Contact resistance shall be measured and the final insertion of jumper wire shall not be removed from the connectors but must be subjected to vibration testing in accordance with paragraph (g)(3)(i) of this section and temperature cycled as indicated in Figure 3 in paragraph (e)(3)(ii) of this section for a duration of 72 hours. After vibration and temperature cycling, the average change in contact resistance shall be no greater than 2 milliohms.

(iv) *Jumper wire pull-out resistance*. Test modules that have received no prior conditioning shall be equipped with 100 38 cm (15 in.) jumper connections of the gauges recommended for use with the module using the insertion tool recommended by the cross-connect module manufacturer. With the test samples suitably supported, wires from each sample shall be pulled, one at a time, by a tensile machine at a cross-head speed of 6 centimeters per minute (cm/min) (2.4 inches per minute (in./min)). Wires shall be pulled both perpendicular and parallel to the plane of the cross-connect field and shall withstand a load of at least 1.1 kg (2.5 lb) before pulling out.

(v) *Cable conductor pull-out resistance*. Test modules that have received no prior conditioning shall be equipped with 100 26, 24, and 22 AWG 38 cm (15 in.) cable conductors using the insertion tool recommended by the cross-connect module manufacturer. With the test samples suitably supported, conductors from each sample shall be pulled, one at a time, by a tensile machine at a cross-head speed of 6 cm/min (2.4 in./min). Wires shall be pulled both perpendicular and parallel to the plane of the face of the splice module and shall withstand a load of at least 1.1 kg (2.5 lb) before pulling out.

(4) *Electrical requirements*—(i) *Dielectric strength*. A housing fully equipped with cross-connect modules shall be tested for dielectric strength in accordance with (g)(4) of this section.

(ii) The dielectric strength of a contact within the cross-connect module to contacts on either side shall be tested. The module shall be tested in a dry environment with an ac power source capable of supplying 8 kv at a rate of increase of 500 volts per second, a circuit breaker to open at breakdown, and a voltmeter to record the breakdown potential. Cross-connect modules shall be prepared in accordance with industry accepted splicing techniques with leads trimmed to approximately 38 cm (15 in.). The dielectric strength of each contact to the contacts on either side shall have an average dielectric strength of approximately 5.0 kv.

(5) *Operational requirements*—(i) *Durability*. In order to verify the durability requirements while minimizing the number of test housings required to complete the test program, the contacts selected for tests shall be separately identified and then checked to establish compliance after the various tests have been conducted.

(ii) Twenty-five jumper connections shall be made on each of two contacts chosen at random from a representative sample in an assembled interface unit. After this test, these and surrounding contacts shall be inspected for damage such as cracks or chips in metal or plastic parts. Failure consists of structural damage, open circuits

through the connector, or inability to pass the jumper wire pullout tests described in paragraph (i)(3)(iv) of this section.

(iii) Select six contacts at random in a representative interface. On each of these contacts attach any test cord included with the unit as specified under normal use of that cord and then remove the test cord as follows. On sample 1, remove the cord normally ten times. On sample 2, remove the clip ten times by jerking the test leads straight out. In these and the remaining tests, do this without releasing any manual attachment mechanisms. On sample 3, remove ten times by jerking downward at 45 °from horizontal; sample 4, upward 45 °ten times; sample 5, left 45 °ten times; sample 6, right 45 °ten times. Check for opens and damage in the test cord, clips, and cross-connect modules. Failure consists of structural damage, open circuits through the connector, or inability of module to pass the test connector reliability, jumper wire pullout, and dielectric strength tests described in paragraphs (i)(3)(ii), (i)(3)(iv), and (i)(4)(ii) of this section.

(j) *Packaging and identification requirements*—(1) *Product identification.* (i) Each housing, terminal block, or cross-connect module shall be permanently marked with the manufacturer's name or trade mark.

(ii) The date of manufacture, model number, serial number and RUS assigned designations shall be placed on a decal inside housings. The product identification nomenclature must correspond with the nomenclature used in the manufacturer's quality assurance program.

(2) *Packaging requirements.* (i) Buried plant housings shall be packaged securely in an environmentally safe container to prevent either deterioration or physical damage to the unit during shipment, handling and storage.

(ii) The product with all the necessary parts shall be shipped in one container unless significant advantages to the user can be obtained otherwise. Packaging of parts in the carton shall be such that the parts become available in the order in which they are needed. The package should be clearly marked as to which end to open. Packages shall be clearly labeled, and correspond to the names given in the instructions.

(iii) Products packed in shipping containers shall be cushioned, blocked, braced, and anchored to prevent movement and damage.

(iv) All products shall be secured to pallets with non-metallic strapping. The strapping and the manner employed shall be of sufficient quantity, width, and thickness to preclude failure during transit and handling.

(v) The use of shrink or stretch film to secure the load to the pallet is permitted. However, such film must be applied over the required strapping.

(vi) Containers that are too large or heavy to be palletized, such as crates, shall be shipped in their own containers. When practical, these containers shall be provided with skids to facilitate fork-lift handling.

(vii) When packaged, the outer cartons shall meet the requirements of the Uniform Freight Classification and the National Motor Freight Classification.

(3) *Container marking requirements.* (i) The package shall be readily identifiable as to the manufacturer, model number, date of manufacture, and serial number.

(ii) The RUS assigned housing designation shall be stamped or marked on the outside of the package container with letter and number sizes large enough for easy identification.

(iii) Each package shall be marked with its approximate gross weight.

(iv) All containers carrying delicate or fragile items shall be marked to clearly identify this condition.

(v) All marking shall be clear, legible, and as large as space permits.

(The information and recordkeeping requirements of this section have been approved by the Office of Management and Budget under control number 0572–0059)

[59 FR 53044, Oct. 21, 1994, as amended at 69 FR 18803, Apr. 9, 2004]

PART 1757—TELEPHONE SYSTEMS OPERATIONS AND MAINTENANCE [RESERVED]

PARTS 1758—1759 [RESERVED□