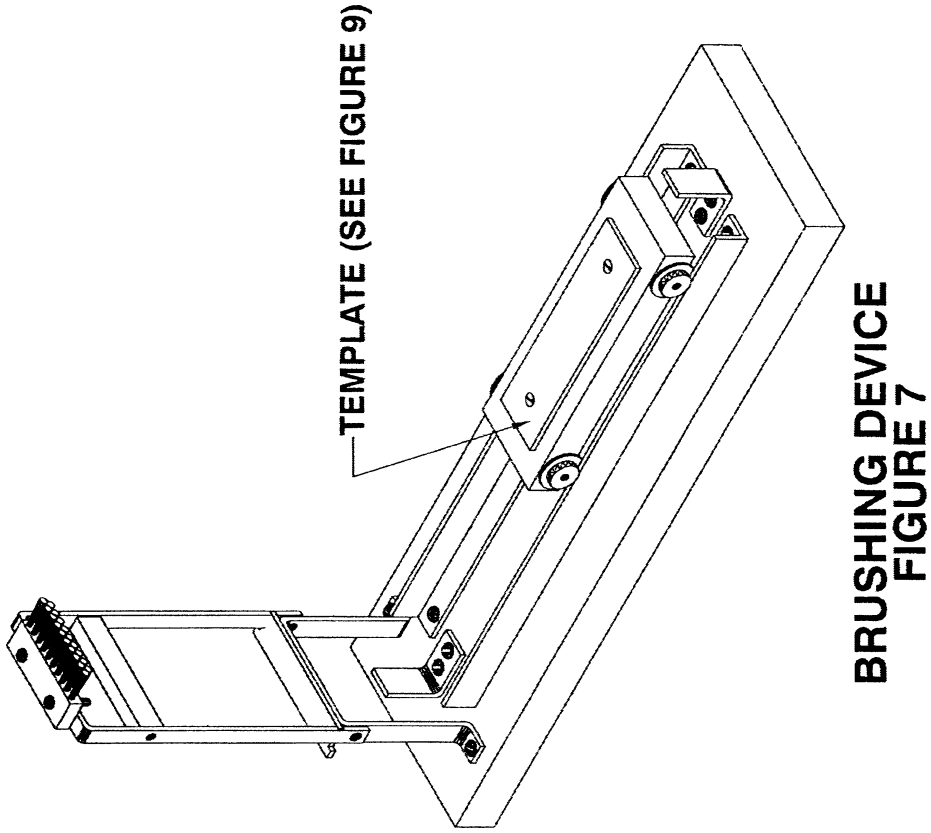

FIGURE 8 TO PART 1610—BRUSH

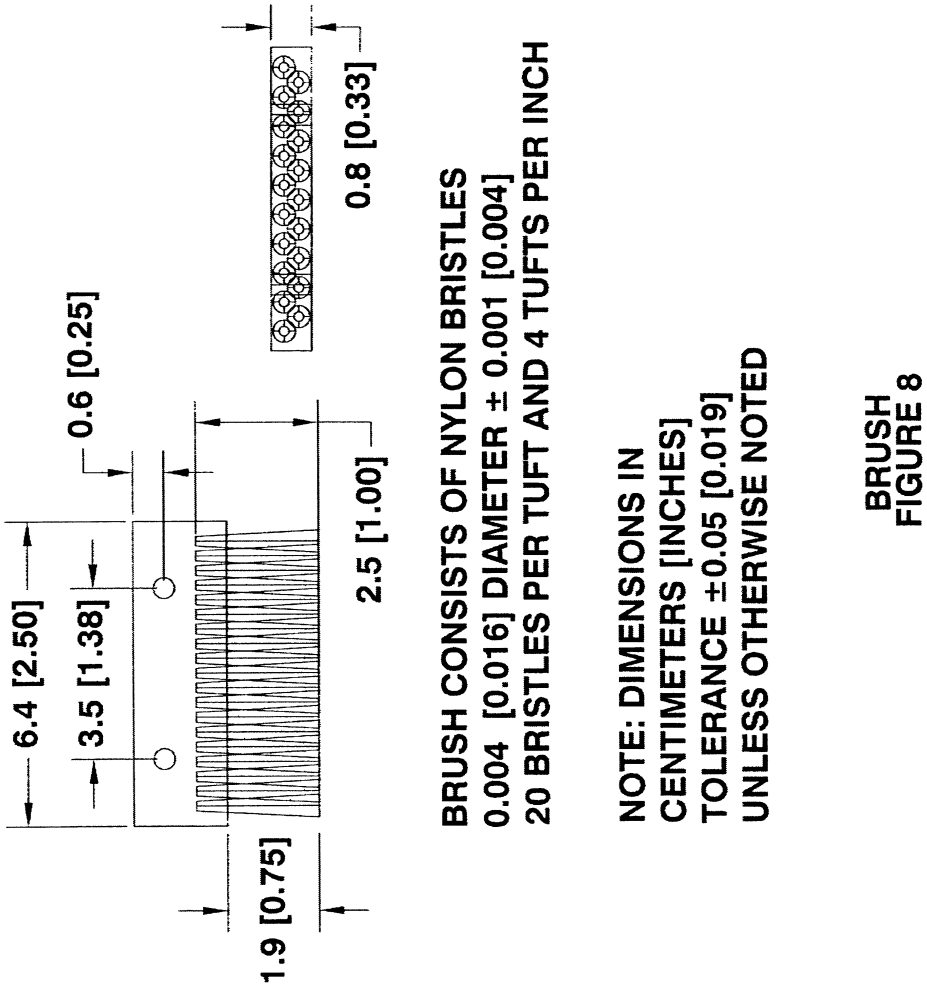

FIGURE 9 TO PART 1610—BRUSHING DEVICE TEMPLATE